MERITOR®

An *ArvinMeritor*™ Brand

HYDRAULIC BRAKE PRODUCT CATALOG

PB-99127
Revised 07/08

CONTENTS

HYDRAULIC BRAKE PARTS

Glossary 6-263

Model Identification iii

Section 1 — VEHICLE APPLICATION GUIDES

Brake Hardware / Brake Shoes / Calipers / Caliper Kits/ Disc Pads / Drums / Rotors / Wheel Cylinders:

- Bluebird **1-2**
- Dodge **1-18**
- Ford **1-38**
- Freightliner **1-120**
- GMC / Chevrolet **1-134**
- Hino **1-204**
- Isuzu **1-216**
- ITEC (International Truck & Engine) **1-230**
- Iveco **1-264**
- Mack **1-264**
- Mitsubishi Fuso **1-264**
- Nissan UD **1-284**
- Sterling **1-290**
- Thomas Built Bus **1-290**
- Workhorse **1-292**

Section 2 — ABS & Meritor Wabco

- PB-01134 Parts Book **2-2**

Section 3 — ASSEMBLIES & EXPLODED VIEWS AND REFERENCE CHARTS

Hydraulic Disc Brake:

- Typical Truck Disc Brake Kit **3-2**
- Bendix **3-4**
- Bosch **3-16**
- Gunite (Kelsey-Hayes) **3-20**
- Meritor **3-24**

Section 4 — DOMESTIC DRUM BRAKE ASSEMBLIES & EXPLODED VIEWS AND REFERENCE CHARTS

Hydraulic Drum Brake:

- Typical Light-Duty Truck Drum Brake Kit **4-2**
- Bendix **4-4**
- Durapark® **4-30**
- GM **4-16**
- Gunite (Kelsey-Hayes) **4-22**
- Lucas (Ford) **4-26**
- Lucas Girling — Backing Plate Assemblies **4-37**
- Wagner **4-38**
- Wagner Anchor Brackets **4-46**
- Miscellaneous Brake Hardware **4-47**
- Miscellaneous Adjuster Parts **4-49**

Section 5 — IMPORT VEHICLE BRAKES

- Durapark® **5-10**
- Ford Cargo Front Disc Brakes **5-2**
- Ford Cargo (Lucas) Rear Drum Brakes **5-6**
- Hino Hydraulic Disc Brakes **5-18**
- Isuzu (Chevrolet/GM) **5-26**
- Isuzu Front Brake Drum **5-32**
- Isuzu Hydrualic Disc Brake **5-44**
- Isuzu Front Disc Brake Calipers **5-46**
- Isuzu Rear Drum Brakes **5-42**
- Lucas Girling — Backing Plate Assemblies **5-17**
- Mitsubushi Fuso **5-48**
- Nissan UD **5-56**
- Import Brake Shoe Index **5-58**
- Import Brake Shoes **5-61**

Section 6 — PRODUCT ILLUSTRATIONS & PHOTOS

- Brake Boosters
  - Application Guide **6-252**
  - Boosters **6-256**
- Brake Fittings and Hose Gaskets **6-133**
- Brake Fluid **6-251**
- Brake Line Displays **6-251**
- Brake Lines and Fittings **6-249**
- Brake Hoses **6-186**
- Brake Shoes **6-100**
- Calipers **6-24**
- Clutch Master Cylinders **6-175**
- Clutch Slave Cylinders **6-179**
- Disc Brake Bumper Gap Shim Kits **6-83**
- Disc Brake Pads **6-62**
- Disc Brake Pad Shims **6-80**
- Hydraulic Actuated Units **6-261**
- Hydraulic Brake Cylinder Bleeder Screws **6-134**
- Master Cylinders **6-136**
- Service Parts Instructions (TP-0857 thru 0859) **6-18**
- Steel Brake Lines and Fittings **6-250**
- Tools **6-262**
- Wheel Cylinders **6-112**

Section 6 — REFERENCE CHARTS

- Brake Hose Progressive Size Charts **6-183**
- Brake Shoe Stamping No. Cross Ref. **6-99**
- Clutch Master and Clutch Slave Cylinders:
  - Application Guide **6-163**
  - Casting Number Index **6-135**
  - Kit Number Index **6-135**
- Quadraulic Disc Brake ID Chart **6-58**
- Disc Brake Caliper Index - by part no. **6-2**
- Disc Brake Caliper Index - by casting no. **6-ii**
- Disc Brake Caliper Listing **6-13**
- Disc Brake Pad/Shim Index **6-59**
- Disc Brake Rotor Identification Chart **6-96**
- Disc Brake Rotor Numerical Listing **6-92**
- Drum Brake Shoe Index **6-98**
- Drum Mounting Types and Instructions **6-85**
- Light-Duty Truck Rotors, Hubs and Drums Numerical Listing **6-88**
- Master Cylinders Casting Number Index **6-135**
- Rotor Mounting Types and Instructions **6-93**
- Wheel Cylinders Casting Number Index **6-109**

Section 7 — REFERENCE

MASTER PART NUMBER INDEX

- Competitive Cross Reference **7-2**
- OEM Cross Reference Listing **7-37**
- Part Number Index **7-56**
- Warranties **7-70**

CATALOG ILLUSTRATION DISCLAIMER

The Meritor Product Photo and Illustration Sections are to be used as a supplemental aid in identifying the configurations and specifications of many of the hydraulic brake parts found in this Catalog.

CAUTION

IN NO CASE SHOULD THESE PICTURES & ILLUSTRATIONS BE USED TO MAKE PRODUCT SUBSTITUTIONS. USE THE APPROPRIATE CATALOG APPLICATION DATA TO DETERMINE THE CORRECT PART.

These illustrations are intended to show the configurations of **Meritor parts only**. The outward appearance of these parts may or may not match OEM or competitive parts.

The Photographs and Illustrations shown in this catalog are typical and may vary slightly in detail from actual parts due to manufacturing tolerances, and/or OEM design differences. The general configuration of the part will be the same, i.e. port positions, mounting holes, etc.

Many parts may have the same external dimensions, but have different internal dimensions and/or materials. These differences make it imperative that only the application guide be used to determine the suitability of a particular part.

The Casting Number Indexes and related information shown is to identify general product configurations. Casting numbers will change with different manufacturers. Casting numbers and much of the associated information is shown when available. Although Meritor believes the information contained in the Index to be correct, errors may be present and further investigation may be needed. Meritor cannot and does not assume any responsibility or liability for such errors or harm resulting therefrom.

WARNING
MANY PARTS THAT SEEM SIMILAR ARE DIFFERENT AND SHOULD NOT BE INTERCHANGED.
AGAIN, NOTE THAT THE PHOTO AND ILLUSTRATION SECTION IN THIS CATALOG IS NOT TO BE USED TO MAKE PRODUCT SUBSTITUTIONS, BUT TO IDENTIFY CONFIGURATIONS AND APPLICATIONS.

USE ONLY THE BRAKE FLUID SPECIFIED BY THE VEHICLE MANUFACTURER. DO NOT USE PETROLEUM BASED SOLVENTS OR CLEANERS.

GVW Classifications for Trucks and Buses:

Class	Gross Vehicle Weight Rating
1	6,000 lbs. or less
2	6,001 - 10,000 lbs.
3	10,001 - 14,000 lbs.
4	14,001 - 16,000 lbs.
5	16,001 - 19,500 lbs.
6	19,501 - 26,000 lbs.
7	26,001 - 33,000 lbs.
8	33,001 - 55,000 lbs.

MODEL IDENTIFICATION

2005 Domestic Vehicle Index Using Hydraulic Brake Systems

DODGE

MODEL	BODY TYPE	GVW RATINGS
2500HD	4x2 / 4x4 Dodge Ram Regular Cab Pickups	9,000 LBS
3500		11,500 - 12,000 LBS
2500HD	4x2 / 4x4 Dodge Ram Quad Cab Pickups	9,000 LBS
3500		11,500 - 12,000 LBS
Cargo Van	Dodge Sprinter Cargo Van	8,5000 - 9,900 LBS
Passenger Van	Dodge Sprinter Passenger Van	8,550 LBS

Note: Dodge Ram Pickups and Chassis-Cabs are identified by a letter and three numbers. “D” indicates two wheel drive. “W” indicates four wheel drive. “250” indicates 8,510 lb. GVW rating. “350” indicates 8,700 to 10,100 lb GVW rating

FORD

MODEL	BODY TYPE	GVW RATINGS
E-350	Super Duty Wagons	8,700 - 9,400 LBS
E-350	Super Duty Vans	9,250 - 9,500 LBS
E-350	R.V. Cutaway	9,600 - 11,500 LBS
E-350	Commercial Cutaways	9,600 - 11,500 LBS
E-450	SuperDuty Cutaways	14,050 LBS
F-250	4x2 / 4x4 Super Duty Pickups	8,800 LBS
F-350	4x2 / 4x4 Super Duty Pickups	9,900 - 11,200 LBS
F-350	Super Duty Chassis Cab Series	9,900 - 12,500 LBS
F-450	Super Duty Chassis Cab Series	15,000 LBS
F-550	Super Duty Chassis Cab Series	17,500 - 19,000 LBS
F-650	Super Duty Chassis Cab Series	26,000 LBS
F-750	Super Duty Chassis Cab Series	30,000 - 33,000 LBS
LCF	Super Duty Chassis Cab Series	15,000 - 19,500 LBS

Note: The 17 character number used for titling, registration and identification purposes that is located on the left door above the striker on cab chassis models but on the right hand engine side of the cowl of cowl chassis models.

1st, 2nd, & 3rd digits are the world manufacture identifier

1FB = FMC of USA, Bus 2FB = FMC of Canada, Bus
1FC = FMC of USA, Truck Stripped Chassis2FC = FMC of CDA, Truck Stripped Chassis
1FD = FMC of USA, Imcomplete Vehicle2FD = FMC of CDA, Imcomplete Vehicle
1FM = FMC of USA, Multiprupose Vehicle2FM = FMC of CDA, Multipeupose Vehicle
1FT = FMC pf USA, Truck Complete Vehicle2FT = FMC of CDA, Truck Complete Vehicle
9BF Ford Brazil, SA

4th digit is brake type and GVRW

Brakes	Class	GVRW LBS	Brakes	Class	GVRW LBS
K = Hyd	3	10,001-14,000	T = Air	3	10,001-14,000
L = Hyd	4	14,001-16,000	U = Air	4	14,001-16,000
M = Hyd	5	16,001-19,500	V = Air	5	16,001-19,500
N = Hyd	6	19,501-26,000	W = Air	6	19,501-26,000
P = Hyd	7	26,001-33,000	X = Air	7	26,001-33,000
R = Hyd	8	33,001-55,000	Y = Air	8	33,001-55,000
S = Hyd	8	55,001 & over	Z = Air	8	55,001 & over

MODEL IDENTIFICATION

2005 Domestic Vehicle Index Using Hydraulic Brake Systems

5th, 6th, and 7th digit are the Line, Series, Chassis, Cab or Body Type
J65 = B600 Chassis Cowl, Ford Diesel
J75 = B700 Chassis Cowl, Ford Diesel
K62 = F600 Chassis Cab, Ford Diesel
K64 = F600 Chassis Cowl, Ford Diesel
K72 = F700 Chassis Cab w/LPO, Ford Diesel
K74 = F700 Chassis Cab, Ford Diesel
K75 = F700 Chassis Cowl, Ford Diesel
K84 = F800 Chassis Cab, Ford Diesel

8th digit is the engine type

9th digit is a computer check digit

10th digit is model year

11th digit is Plant of Manufacture

12th through 17th digits are sequence numbers

FREIGHTLINER

MODEL	BODY TYPE	GVW RATINGS
Cargo Van	Dodge Sprinter Cargo Van	8,500 - 9,900 LBS
Passenger Van	Dodge Sprinter Passenger Van	8,550 LBS
M2-106 4x2 M2-106V	Business Class Trucks	16, 000 - 50,000 LBS

GM (Chevrolet / GMC)

MODEL	BODY TYPE	GVW RATINGS
C-2500HD	Pickup Series	9,200 LBS
C-3500		11,400LBS
C-2500HD	Crew Cab Series	9,200 LBS
C-3500		11,400LBS
C3500	Chassis Cab Series	11,400LBS
C4500	C Series	16,000 LBS
C5500		18,000 - 19,000 LBS
C6500		22,000 - 25,900 LBS
C7500		33,000 LBS
T6F042	T Series	24,350 - 29,990 LBS
T7F042		26,990 - 37,600 LBS
W3 / W4	Forward	18,000 - 19,500 LBS

Note: All General Motors Medium Duty Models are identified by seven characters: two Letters, a number, another letter and three more numbers. The first letter “C” indicates a Chevrolet model, a “T” indicates a GMC model. The second letter indicates the model line, “C” Medium Conventional; “D” Aluminum Tilt Astro; “G”, Van series; “W” Isuzu manufactured. L-C-F Tiltmaster steel cab. The first number designates the GWR range. The third letter indicates cab style “H”, 104" BBC Conventional; “T”, Chassis only; “R”, Steel tilt; “S” Steel Tilt. The second number is a constant “0” for future use. The third and fourth numbers designate the chassis type, 42 = 4x2, 64 = 6x4.

MODEL IDENTIFICATION

2005 Domestic Vehicle Index Using Hydraulic Brake Systems

INTERNATIONAL TRUCK AND ENGINE

MODEL	BODY TYPE	GVW RATINGS
CF500 CF600	4x2 Medium Low Cab Forward	16,000 - 19,500 LBS
1652 SC	4x2 Forward Control Stripped Chassis	19,500 - 27,000 LBS
3200	4x2 School Bus Chassis Cab	21,000 - 23,500 LBS
3300	4x2 School Bus Flat Back Crowl with 80 degree Tilt Hood	25,000 - 33,000 LBS
4200	Conventional Chassis -Cab Truck	23,500 - 35,000 LBS
4200 LP	Conventional Chassis -Cab Truck LoProfile	21,660 - 27,000 LBS
4300	Conventional Chassis -Cab Truck	23,500 - 37,000 LBS
4300 LP	Conventional Chassis -Cab Truck LoProfile	23,500 - 27,000 LBS
4400	Conventional Chassis -Cab Truck	25,000 - 40,000 LBS
4400 LP	Conventional Chassis -Cab Truck LoProfile	23,500 - 27,000 LBS

NOTE: International truck models in current production are identified by three or four number combinations, and sometimes followed by letter suffixes. The first number indicates the basic series. The second number indicates engine type. The third number is “0” in all models except the 1000 and 2000 series, where “5” indicates lower and “7” indicates higher GVW ratings within the series. The fourth number for 1000 and 2000 series only indicates vehicle type - “2” = dual rear wheel, stripped chassis truck; “4” = dual real wheel truck (all other models use “0” as a constant). Suffix “T” indicates Tractor, “LP” indicates Low Profile, “SFA” indicates Set-Forward-Axle, “SBA” indicates Set-Back-Axle, “CH” indicates Car Hauler

STERLING

MODEL	BODY TYPE	GVW RATINGS
Acterra	Conventional Cab Truck	18,000 - 48,000 LBS

2005 IMPORT VEHICLE INDEX USING HYDRAULIC BRAKE SYSTEMS

HINO

MODEL	BODY TYPE	GVW RATINGS
145	4x2 Conventional Chassis -Cab	15,000LBS
165	4x2 Conventional Chassis -Cab	16,000 LBS
185	4x2 Conventional Chassis -Cab	17,600 - 18,000 LBS
238	4x2 Conventional Chassis -Cab	23,000 LBS
268	4x2 Conventional Chassis -Cab	29,950 LBS

Note: Hino truck models are designated by two letters and four numbers. “FA” indicates Class 4; “FB” indicates Class 5; “FD” and “FE” are class 6; “FF” and SG are Class 7.

MODEL IDENTIFICATION

2005 Domestic Vehicle Index Using Hydraulic Brake Systems

ISUZU

MODEL	BODY TYPE	GVW RATINGS
NPR/W35-45	Chassis Cab Gasoline Lo-Cab-Forward	12,050 - 14,050 LBS
	Chassis Cab Diesel	12,000 - 14,500 LBS
	Crew Cab Chassis Cab	14,500 - 17,950LBS
NQR/W55	Chassis Cab Lo-Cab-Forward	17,950 LBS
NRR-HD/W55Chassis Cab	Lo-Cab-Forward 19,500 LBS	
T6500-FTR	COE Tilt Cab	24,350 - 29,000 LBS
T7500-FVR	COE Tilt Cab	26,990 - 37,600 LBS
T8500-FXR	COE Tilt Cab	33,000 - 49,090 LBS

Note: Isuzu Trucks are identified by a three letter designation: “NPR” indicates a Class 3 GVW rating; “NRR” indicates Class 4 or 5; “FSR” indicates Class 5 or 6; “FTR” indicates class 6 or 7; “FVR” indicates class 7; “EVR indicates class 7 tractor. Following the three letter designation is a “/W” and a number. The number indicates relative size or GVW, “4” being the lightest and “7” the heaviest.

MITSUBISHI FUSO

MODEL	BODY TYPE	GVW RATINGS
FE120	COE Tilt Cab	12,000 LBS
FE140/145	COE Tilt Cab	14,050 LBS
FG140 AWD	COE Tilt Cab	14,050 LBS
FE180	COE Tilt Cab	12,000 LBS
FK200	COE Tilt Cab	20,935 LBS
FM260	COE Tilt Cab	25,995 LBS

Note: Mitsubishi Fuso Trucks are identified by two letters and three numbers. All models begin with the letter F. The second letter indicates the vehicle size, “E” being the lightest and “M” being the heaviest.

NISSAN / UD

MODEL	BODY TYPE	GVW RATINGS
UD1300		13,000 LBS
UD1400		14,250 LBS
UD1800CS		17,995 LBS
UD1800HD		17,995 LBS
UD2000		19,500 LBS
UD2300LP		23,000 LBS
UD2300DH		23,000 LBS
UD2600		25,995 LBS
UD3300		32,900 LBS

Note: UD truck model designations are made up of the corporate symbol, “UD”, and a number describing the vehicles approximate GVW or GCW rating. A four number designation indicates a straight truck. A three number designation followed by the letter “T” indicates a tractor.

NOTES

NOTES

MERITOR®

an ArvinMeritor™ brand

Application

Section 1

SECTION 1

APPLICATION INFORMATION INDEX

MANUFACTURER / MODEL **PAGE**

BLUEBIRD

A3FE..... 1-2
BBCV..... 1-4
C1FE..... 1-6
C3FE..... 1-8
CSFE..... 1-10
School Bus..... 1-12
TC2000..... 1-14
TCFE..... 1-16

DODGE

1000 Series..... 1-18
400 Series..... 1-20
500 Series..... 1-20
600 Series..... 1-22
700 Series..... 1-24
800 Series..... 1-26
900 Series..... 1-28
B200, B250 Series Van - 3/4 Ton..... 1-28
B200, B250, PB200, PB250 Series Van - 3/4 Ton..... 1-30
B300, B350, PB300 Series Van - 1Ton..... 1-32
B300, B350, PB300, PB350 Series Van - 1Ton..... 1-34
D200, D250, PD200, PD250, RD250 Series Pickup-3/4 Ton..... 1-46
D300, D350, PD300, PD350, D400, D450, PD400 PD450 Series
Pickup-1 Ton..... 1-52
P200 Series Parcel Delivery-3/4 Ton..... 1-56
P300 Series Parcel Delivery-1 Ton..... 1-58
R300, M300 Motor Home..... 1-58
R400, M400 Motor Home..... 1-58
RAM 2500 3/4 Ton Pickup..... 1-60
RAM 3500 1 Ton Pickup..... 1-62
Sprinter Van 2500..... 1-66
Sprinter Van 3500..... 1-68
W200,W250, PW200, PW250 Series 4WD Pickup-3/4 Ton..... 1-68
W300, W350, PW300, PW350, W400, W450, PW400, PW450 Series
4WD Pickup-1 Ton..... 1-74

APPLICATION INFORMATION INDEX (Cont.)

MANUFACTURER / MODEL **PAGE**

FORD

B600 Series: School Bus..... 1-80
B700 Series: School Bus..... 1-84
B800 Series: School Bus..... 1-88
C600 Series: Tilt Cab..... 1-92
C700 Series: Tilt Cab..... 1-94
C800 Series: Tilt Cab..... 1-98
CF600, 6000 Series: Cargo, Cab Forward Design..... 1-100
CF700, 7000 Series: Cargo, Cab Forward Design..... 1-102
CF800, 8000 Series: Cargo, Cab Forward Design..... 1-102
E200, E250 Series Van-3/4 Ton..... 1-104
E250 Series Van-3/4 Ton..... 1-108
E300, E350 Series Van-1 Ton..... 1-112
E350 Series Van-1 Ton..... 1-118
E450 Series Van..... 1-122
F200, F250 Series Pickup-3/4 Ton..... 1-124
F250 Superduty Series Pickup-3/4Ton..... 1-134
F300, F350 Series Pickup-1Ton..... 1-142
F350 Superduty Series Pickup-1Ton 1-150
F350 Superduty Series Stripped Chassis-1Ton..... 1-158
F450..... 1-160
F450, 500 Conventional; F53, 66 Stripped Chassis: Super Duty Series..... 1-164
F53 / F59 Stripped Chassis..... 1-172
F550..... 1-172
F600 Series: Conventional..... 1-176
F650 Series: Conventional..... 1-192
F700 Series: Conventional..... 1-196
F750 Series: Conventional..... 1-214
F800 Series: Conventional..... 1-216
L800 Series: Louisville Conventional 106.4" BBC Tilt Hood Chassis Cab Truck..... 1-234
LN600 Series: Louisville 94.4" BBC Short Conventional Chassis Cab..... 1-244
LN700 Series: Louisville 94.4" BBC Short Conventional Chassis Cab..... 1-262
LN800 Series: Louisville 94.4" BBC Short Conventional Chassis Cab..... 1-280
LNT700 Series: Louisville 94.4" BBC Short Conventional Chassis Cab, Tandem Axle..... 1-290
LNT800 Series: Louisville 94.4" BBC Short Conventional Chassis Cab, Tandem Axle..... 1-308
LT800 Series: Louisville Conventional 106.4" BBC Tandem Chassis Cab Truck..... 1-316
LTS800 Series: Louisville 106.3" BBC Tandem Chassis Cab, Set Back Front Axle Truck..... 1-326

APPLICATION INFORMATION INDEX (Cont.)

MANUFACTURER / MODEL **PAGE**

FREIGHTLINER

FL50 1-334
FL60 1-336
FL70 1-338
FW700 1-340
M2 1-342
MB50 1-344
MB60 1-344
MB70 1-346
MT45 1-346

GMC / CHEV

2500 Sierra, Silverado 1-354
3500 Sierra, Silverado 1-356
40, 4000 Series-20,000 lb. GVW 1-358
50, 500, 5000 Series 1-372
60, 6000 Series-20,000-27,500 lb. GVW 1-384
70, 7000 Series 1-424
C-2500 Series- 3/4 Ton - Conventional Cab, Pickup and Suburban 1-348
C-3500 Series- 1 Ton - Conventional Cab, Pickup and Suburban 1-436
C4500 Topkick, Kodiak - 16,000 lb. GVW 1-444
C5500 Topkick, Kodiak - 18,000 - 19,500 lb. GVW 1-446
C6500 Topkick, Kodiak - 22,000 lb. GVW 1-448
C7500 Topkick, Kodiak - 29,000 - 33,900 lb. GVW 1-448
G-2500 Series-3/4 Ton Van 1-450
G-2500,2600 Series-3/4 Ton Van 1-452
G-3500, Series-1 Ton Van 1-454
G-3500,3600 Series-1 Ton Van 1-458
K-2500 Series-3/4 Ton Pickup and Suburban 4WD 1-464
K-3500 Series-1 Ton Pickup and Suburban 4WD 1-470
LLV Postal Vehicle 1-474
P-20, P-2500 Series-3/4 Ton Forward Control 1-474
P-30, P-3500 Series-1 Ton Forward Control and Motor Home Chassis 1-478
R-25, R-2500 Series-3/4 TIN Conventional Pickup and Suburban 2WD 1-500
R-30, R-3500 Series-1 Ton Conventional Pickup and Suburban 2WD 1-502
V-20, V-2500 Series-3/4 Ton Conventional Pickup and Suburban 4WD 1-504
V-30, V-3500 Series-1 Ton Pickup and Suburban 4WD 1-504
W 4 1-506
W 5 1-508

APPLICATION INFORMATION INDEX (Cont.)

MANUFACTURER / MODEL **PAGE**

HINO

145 ... 1-512
165 ... 1-512
185 ... 1-512
238 / 238LP ... 1-514
268 / 268A ... 1-514
338 ... 1-516
FA ... 1-516
FB ... 1-518
FB-15 ... 1-518
FD ... 1-518
FD5H ... 1-520
FE ... 1-520
FE5H ... 1-522
FF4H ... 1-522
FF5H ... 1-522
FG ... 1-524
GC ... 1-524

ISUZU

FSR Series ... 1-524
FTR Series ... 1-526
NPR Series ... 1-528
NQR Series ... 1-540
NRR Series ... 1-542

ITE

1000 Series ... 1-544
140, 1400, 1452, 1454 Series ... 1-544
150, 1500 Series ... 1-554
160, 1600, 1650 Series ... 1-556
170, 1700, 1710, 1723, 1724, 1750, 1753, 1754 Series Conventional Cab, School Bus, Tilt Cab ... 1-618
180, 1800, 1810, 1823, 1824, 1850, 1853, 1854 Series Conventional Truck, School Bus, Tilt Cab ... 1-834
190, 1900, 1910, 1950 Series Conventional Tilt Cab ... 1-862
2000 Series: Tractor ... 1-896
3000, 3200, 3300 SC Series School Bus ... 1-904
3000, 3400, 3600, 3800, 3900 Series: School Bus ... 1-908
400 Series: LFE Medium Duty ... 1-914
4000 Series: Medium Conventionals ... 1-914
4200, 4300, 4400, 4600, 4700, 4900 Series: Medium Conventionals ... 1-920
500 Series: LFE Medium Duty ... 1-930
700 Series: LFE Medium Duty ... 1-930

APPLICATION INFORMATION INDEX (Cont.)

MANUFACTURER / MODEL **PAGE**

IVECO

10-14AS 1-932
12-16AS 1-932
18-14 1-932
23-16 1-932
Euro 110 1-932
Euro 220 1-932
EuroTurbo 12-12 1-932
EuroTurbo 15-14 1-934
EuroTurbo 120A 1-932
EuroTurbo 220 1-934
EuroTurbo 230 1-934
Z100 1-934
Z110 1-934
Z120TA 1-934
Z200 1-936
Z220 1-936
Z220T 1-936
Z230T 1-938

MACK

CS200 1-938
MS200 1-940
MS300 1-942

MAGIRUS

160 A11FL 1-944
160 A13FL 1-944

MITSUBISHI FUSO

FE 1-948
FE - HD Model 639L 1-950
FE - HD Model 639T 1-954
FE - HD Model 640, 649 1-960
FG 1-964
FG 4 x 4 1-964
FH 1-968
FK 1-968

APPLICATION INFORMATION INDEX (Cont.)

MANUFACTURER / MODEL **PAGE**

NISSAN UD

1100 Series..... 1-968
1200 Series..... 1-968
1300 Series..... 1-970
1400 Series..... 1-970
2600 Series..... 1-970
2800 Series..... 1-970
3000, 3000HD, 3000SD Series..... 1-972
CLA-83..... 1-972
CLE-87..... 1-974
CMA-83..... 1-974
CMA-87/88..... 1-976
CPB-12 Series..... 1-976

STERLING

Acterra..... 1-978

THOMAS BUILT

All..... 1-980

VOLVO

F6..... 1-980

WORKHORSE

Custom Chassis 4 Wheel Disc Brake..... 1-984
Custom Chassis Front Disc Rear Drum..... 1-986
UFO - GVW 26,000 lb..... 1-992
W20 - GVW 20,700 lb..... 1-992
W22 - GVW 22,000 lb..... 1-992
W24 - GVW 24,000 lb..... 1-994
W25.5 - GVW 25,500 lb..... 1-994
W62 - Diesel - GVW 19,500 lb..... 1-994
W62 - Diesel - GVW 23,500 lb..... 1-996
W62 - Gas - GVW 19,500 lb..... 1-996
W62 - Gas - GVW 23,500 lb..... 1-996

MAKE MODEL YEAR AXLE CODE AXLE WEIGHT	AXLE & BRK. TYPE	BRK. MFG.	BRAKE SIZE	FMSI	MERITOR DISC PAD OR BRAKE SHOE	MERITOR GUIDE PIN OR RETURN SPRING KIT	MERITOR CALIPER HWD. KIT OR RETURN SPRING KIT	MERITOR ADJUSTER KIT (LEFT WHEEL)	MERITOR ADJUSTER KIT (RIGHT WHEEL)
BLUEBIRD									
A3FE									
2007									
Type C Vision Series	Fd	Meritor		7636 - D769	MD769	N/A	R4011729	-	-
Type D All American	Fd	Meritor		7636 - D769	MD769	N/A	R4011729	-	-
	Fd	Meritor		7636 - D1032	MD769	N/A	R4011729	-	-
	Fd	Meritor		7636 - D1032	MD769	N/A	R4011729	-	-
	Rd	Meritor		7636 - D1032	MD769	N/A	R4011729	-	-
	Rd	Meritor		7636 - D769	MD769	N/A	R4011729	-	-
	Rd	Meritor		7636 - D1032	MD769	N/A	R4011729	-	-
	Rd	Meritor		7636 - D769	MD769	N/A	R4011729	-	-
2006									
	Fd	Meritor		7636 - D769	MD769	N/A	R4011729	-	-
	Fd	Meritor		7636 - D769	MD769	N/A	R4011729	-	-
	Fd	Meritor		7636 - D1032	MD769	N/A	R4011729	-	-
	Fd	Meritor		7636 - D1032	MD769	N/A	R4011729	-	-
	Rd	Meritor		7636 - D1032	MD769	N/A	R4011729	-	-
	Rd	Meritor		7636 - D769	MD769	N/A	R4011729	-	-
	Rd	Meritor		7636 - D1032	MD769	N/A	R4011729	-	-
	Rd	Meritor		7636 - D769	MD769	N/A	R4011729	-	-
2005									
	Fd	Meritor		7636 - D1032	MD769	N/A	R4011729	-	-
	Fd	Meritor		7636 - D1032	MD769	N/A	R4011729	-	-
	Fd	Meritor		7636 - D769	MD769	N/A	R4011729	-	-
	Fd	Meritor		7636 - D769	MD769	N/A	R4011729	-	-
	Rd	Meritor		7636 - D1032	MD769	N/A	R4011729	-	-
	Rd	Meritor		7636 - D769	MD769	N/A	R4011729	-	-
	Rd	Meritor		7636 - D1032	MD769	N/A	R4011729	-	-
	Rd	Meritor		7636 - D769	MD769	N/A	R4011729	-	-
2004									
	Fd	Meritor		7636 - D769	MD769	N/A	R4011729	-	-
	Fd	Meritor		7636 - D769	MD769	N/A	R4011729	-	-
	Fd	Meritor		7636 - D1032	MD769	N/A	R4011729	-	-
	Fd	Meritor		7636 - D1032	MD769	N/A	R4011729	-	-
	Rd	Meritor		7636 - D769	MD769	N/A	R4011729	-	-
	Rd	Meritor		7636 - D1032	MD769	N/A	R4011729	-	-
	Rd	Meritor		7636 - D1032	MD769	N/A	R4011729	-	-
	Rd	Meritor		7636 - D769	MD769	N/A	R4011729	-	-
2003									
	Fd	Meritor		7636 - D1032	MD769	N/A	R4011729	-	-
	Fd	Meritor		7636 - D769	MD769	N/A	R4011729	-	-
	Fd	Meritor		7636 - D1032	MD769	N/A	R4011729	-	-
	Fd	Meritor		7636 - D769	MD769	N/A	R4011729	-	-
	Rd	Meritor		7636 - D769	MD769	N/A	R4011729	-	-
	Rd	Meritor		7636 - D1032	MD769	N/A	R4011729	-	-
	Rd	Meritor		7636 - D769	MD769	N/A	R4011729	-	-
	Rd	Meritor		7636 - D1032	MD769	N/A	R4011729	-	-
2002									
	Fd	Bendix		7142 - D225	MD225	N/A	R40H5522	-	-
	Fd	Bosch		7655 - D786	MD786	R4011754	N/A	-	-
	Fd	Bosch		7654 - D786	MD786A	R4011754	N/A	-	-
	Fd	Meritor		7636 - D1032	MD769	N/A	R4011121	-	-
	Fd	Meritor		7636 - D769	MD769	N/A	R4011121	-	-
	Rd	Bendix		7142 - D225	MD225	N/A	R40H5522	-	-
	Rd	Bosch		7654 - D786	MD786A	R4011754	N/A	-	-
	Rd	Bosch		7655 - D786	MD786	R4011754	N/A	-	-
	Rd	Meritor		7636 - D769	MD769	N/A	R4011121	-	-
	Rd	Meritor		7636 - D1032	MD769	N/A	R4011121	-	-
2001									
	Fd	Bendix		7142 - D225	MD225	N/A	R40H5522	-	-
	Fd	Bosch		7654 - D786	MD786A	R4011754	N/A	-	-
	Fd	Bosch		7655 - D786	MD786	R4011754	N/A	-	-
	Fd	Meritor		7636 - D1032	MD769	N/A	R4011121	-	-
	Fd	Meritor		7636 - D769	MD769	N/A	R4011121	-	-
	Rd	Bendix		7142 - D225	MD225	N/A	R40H5522	-	-
	Rd	Bosch		7654 - D786	MD786A	R4011754	N/A	-	-
	Rd	Bosch		7655 - D786	MD786	R4011754	N/A	-	-

72 - Phenolic/Steel Face

201 - Steel Piston

MERITOR DRUM OR ROTOR NO.	CALIPER OR CYLINDER BORE SIZE	MERITOR CALIPER OR WHEEL CYLINDER (LEFT)	MERITOR CALIPER OR WHEEL CYLINDER (RIGHT)	MERITOR CALIPER OR WHEEL CYLINDER REPAIR KIT	MERITOR CALIPER PISTON	MERITOR MASTER CYLINDER	MERITOR MASTER CYLINDER KIT	MERITOR BRAKE HOSE (LEFT)	MERITOR BRAKE HOSE (RIGHT)
BLUEBIRD									
A3FE									
-	64mm	60450474001	60450473001	R4011731	R4011511[72]	-	-	-	-
-	70mm	60450469002	60450468002	R4011731	R4011511[72]	-	-	-	-
-	64mm	60450474001	60450473001	R4011731	R4011511[72]	-	-	-	-
-	70mm	60450469002	60450468002	R4011731	R4011511[72]	-	-	-	-
-	70mm	60450469002	60450468002	R4011731	R4011511[72]	-	-	-	-
-	64mm	60450474001	60450473001	R4011731	R4011511[72]	-	-	-	-
-	64mm	60450474001	60450473001	R4011731	R4011511[72]	-	-	-	-
-	70mm	60450469002	60450468002	R4011731	R4011511[72]	-	-	-	-
-	64mm	60450474001	60450473001	R4011731	R4011511[72]	-	-	-	-
-	70mm	60450469002	60450468002	R4011731	R4011511[72]	-	-	-	-
-	70mm	60450469002	60450468002	R4011731	R4011511[72]	-	-	-	-
-	64mm	60450474001	60450473001	R4011731	R4011511[72]	-	-	-	-
-	64mm	60450474001	60450473001	R4011731	R4011511[72]	-	-	-	-
-	70mm	60450469002	60450468002	R4011731	R4011511[72]	-	-	-	-
-	64mm	60450474001	60450473001	R4011731	R4011511[72]	-	-	-	-
-	70mm	60450469002	60450468002	R4011731	R4011511[72]	-	-	-	-
-	64mm	60450474001	60450473001	R4011731	R4011511[72]	-	-	-	-
-	64mm	60450474001	60450473001	R4011731	R4011511[72]	-	-	-	-
-	70mm	60450469002	60450468002	R4011731	R4011511[72]	-	-	-	-
-	70mm	60450469002	60450468002	R4011731	R4011511[72]	-	-	-	-
-	64mm	60450474001	60450473001	R4011731	R4011511[72]	-	-	-	-
-	70mm	60450469002	60450468002	R4011731	R4011511[72]	-	-	-	-
-	70mm	60450469002	60450468002	R4011731	R4011511[72]	-	-	-	-
-	64mm	60450474001	60450473001	R4011731	R4011511[72]	-	-	-	-
-	64mm	60450474001	60450473001	R4011731	R4011511[72]	-	-	-	-
-	70mm	60450469002	60450468002	R4011731	R4011511[72]	-	-	-	-
-	64mm	60450474001	60450473001	R4011731	R4011511[72]	-	-	-	-
-	70mm	60450469002	60450468002	R4011731	R4011511[72]	-	-	-	-
-	64mm	60450474001	60450473001	R4011731	R4011511[72]	-	-	-	-
-	64mm	60450474001	60450473001	R4011731	R4011511[72]	-	-	-	-
-	70mm	60450469002	60450468002	R4011731	R4011511[72]	-	-	-	-
-	70mm	60450469002	60450468002	R4011731	R4011511[72]	-	-	-	-
-	2.88"	R4255250	R4255250	R4066365	R4090096[72]	-	-	-	-
-	73mm	R4255850	R4255850	R4011758	R4011757[72]	-	-	-	-
-	66mm	R4255849	R4255849	R4011752	R4011751[72]	-	-	-	-
-	70mm	60450469002	60450468002	R4011731	R4011511[201]	-	-	-	-
-	70mm	60050313	60050312	-	-	-	-	-	-
-	2.88"	R4255250	R4255250	R4066365	R4090096[72]	-	-	-	-
-	66mm	R4255849	R4255849	R4011752	R4011751[72]	-	-	-	-
-	73mm	R4255850	R4255850	R4011758	R4011757[72]	-	-	-	-
-	70mm	60050313	60050312	-	-	-	-	-	-
-	70mm	60450469002	60450468002	R4011731	R4011511[201]	-	-	-	-
-	2.88"	R4255250	R4255250	R4066365	R4090096[72]	-	-	-	-
-	66mm	R4255849	R4255849	R4011752	R4011751[72]	-	-	-	-
-	73mm	R4255850	R4255850	R4011758	R4011757[72]	-	-	-	-
-	70mm	60450469002	60450468002	R4011731	R4011511[201]	-	-	-	-
-	70mm	60050313	60050312	-	-	-	-	-	-
-	2.88"	R4255250	R4255250	R4066365	R4090096[72]	-	-	-	-
-	66mm	R4255849	R4255849	R4011752	R4011751[72]	-	-	-	-
-	73mm	R4255850	R4255850	R4011758	R4011757[72]	-	-	-	-

MAKE MODEL YEAR AXLE CODE AXLE WEIGHT	AXLE & BRK. TYPE	BRK. MFG.	BRAKE SIZE	FMSI	MERITOR DISC PAD OR BRAKE SHOE	MERITOR GUIDE PIN OR RETURN SPRING KIT	MERITOR CALIPER HWD. KIT OR RETURN SPRING KIT	MERITOR ADJUSTER KIT (LEFT WHEEL)	MERITOR ADJUSTER KIT (RIGHT WHEEL)
BLUEBIRD(Cont.)									
A3FE(Cont.)									
2001									
	Rd	Meritor		7636 - D1032	MD769	N/A	R4011121	-	-
	Rd	Meritor		7636 - D769	MD769	N/A	R4011121	-	-
BBCV									
2007									
Type C Vision Series	Fd	Meritor		7636 - D769	MD769	N/A	R4011729	-	-
	Fd	Meritor		7636 - D1032	MD769	N/A	R4011729	-	-
	Fd	Meritor		7636 - D769	MD769	N/A	R4011729	-	-
	Fd	Meritor		7636 - D1032	MD769	N/A	R4011729	-	-
	Rd	Meritor		7636 - D769	MD769	N/A	R4011729	-	-
	Rd	Meritor		7636 - D769	MD769	N/A	R4011729	-	-
	Rd	Meritor		7636 - D1032	MD769	N/A	R4011729	-	-
	Rd	Meritor		7636 - D1032	MD769	N/A	R4011729	-	-
2006									
	Fd	Meritor		7636 - D769	MD769	N/A	R4011729	-	-
	Fd	Meritor		7636 - D1032	MD769	N/A	R4011729	-	-
	Fd	Meritor		7636 - D1032	MD769	N/A	R4011729	-	-
	Fd	Meritor		7636 - D769	MD769	N/A	R4011729	-	-
	Rd	Meritor		7636 - D1032	MD769	N/A	R4011729	-	-
	Rd	Meritor		7636 - D769	MD769	N/A	R4011729	-	-
	Rd	Meritor		7636 - D769	MD769	N/A	R4011729	-	-
	Rd	Meritor		7636 - D1032	MD769	N/A	R4011729	-	-
2005									
	Fd	Meritor		7636 - D769	MD769	N/A	R4011729	-	-
	Fd	Meritor		7636 - D769	MD769	N/A	R4011729	-	-
	Fd	Meritor		7636 - D1032	MD769	N/A	R4011729	-	-
	Fd	Meritor		7636 - D1032	MD769	N/A	R4011729	-	-
	Rd	Meritor		7636 - D1032	MD769	N/A	R4011729	-	-
	Rd	Meritor		7636 - D769	MD769	N/A	R4011729	-	-
	Rd	Meritor		7636 - D769	MD769	N/A	R4011729	-	-
	Rd	Meritor		7636 - D1032	MD769	N/A	R4011729	-	-
2004									
	Fd	Meritor		7636 - D1032	MD769	N/A	R4011729	-	-
	Fd	Meritor		7636 - D1032	MD769	N/A	R4011729	-	-
	Fd	Meritor		7636 - D769	MD769	N/A	R4011729	-	-
	Fd	Meritor		7636 - D769	MD769	N/A	R4011729	-	-
	Rd	Meritor		7636 - D1032	MD769	N/A	R4011729	-	-
	Rd	Meritor		7636 - D769	MD769	N/A	R4011729	-	-
	Rd	Meritor		7636 - D1032	MD769	N/A	R4011729	-	-
	Rd	Meritor		7636 - D769	MD769	N/A	R4011729	-	-
2003									
	Fd	Meritor		7636 - D769	MD769	N/A	R4011729	-	-
	Fd	Meritor		7636 - D769	MD769	N/A	R4011729	-	-
	Fd	Meritor		7636 - D1032	MD769	N/A	R4011729	-	-
	Fd	Meritor		7636 - D1032	MD769	N/A	R4011729	-	-
	Rd	Meritor		7636 - D769	MD769	N/A	R4011729	-	-
	Rd	Meritor		7636 - D1032	MD769	N/A	R4011729	-	-
	Rd	Meritor		7636 - D769	MD769	N/A	R4011729	-	-
	Rd	Meritor		7636 - D1032	MD769	N/A	R4011729	-	-
2002									
	Fd	Meritor		7636 - D1032	MD769	N/A	R4011729	-	-
	Fd	Meritor		7636 - D1032	MD769	N/A	R4011729	-	-
	Fd	Meritor		7636 - D769	MD769	N/A	R4011729	-	-
	Fd	Meritor		7636 - D769	MD769	N/A	R4011729	-	-
	Rd	Meritor		7636 - D1032	MD769	N/A	R4011729	-	-
	Rd	Meritor		7636 - D1032	MD769	N/A	R4011729	-	-
	Rd	Meritor		7636 - D769	MD769	N/A	R4011729	-	-
	Rd	Meritor		7636 - D769	MD769	N/A	R4011729	-	-
2001									
	Fd	Meritor		7636 - D1032	MD769	N/A	R4011729	-	-
	Fd	Meritor		7636 - D1032	MD769	N/A	R4011729	-	-
	Fd	Meritor		7636 - D769	MD769	N/A	R4011729	-	-
	Rd	Meritor		7636 - D769	MD769	N/A	R4011729	-	-
	Rd	Meritor		7636 - D769	MD769	N/A	R4011729	-	-

72 - Phenolic/Steel Face

201 - Steel Piston

MERITOR DRUM OR ROTOR NO.	CALIPER OR CYLINDER BORE SIZE	MERITOR CALIPER OR WHEEL CYLINDER (LEFT)	MERITOR CALIPER OR WHEEL CYLINDER (RIGHT)	MERITOR CALIPER OR WHEEL CYLINDER REPAIR KIT	MERITOR CALIPER PISTON	MERITOR MASTER CYLINDER	MERITOR MASTER CYLINDER KIT	MERITOR BRAKE HOSE (LEFT)	MERITOR BRAKE HOSE (RIGHT)
BLUEBIRD(Cont.)									
A3FE(Cont.)									
-	70mm	60450469002	60450468002	R4011731	R4011511[201]	-	-	-	-
-	70mm	60450469002	60450468002	R4011731	R4011511[201]	-	-	-	-
BBCV									
-	64mm	60450474001	60450473001	R4011731	R4011511[72]	-	-	-	-
-	70mm	60450469002	60450468002	R4011731	R4011511[72]	-	-	-	-
-	70mm	60450469002	60450468002	R4011731	R4011511[72]	-	-	-	-
-	64mm	60450474001	60450473001	R4011731	R4011511[72]	-	-	-	-
-	64mm	60450474001	60450473001	R4011731	R4011511[72]	-	-	-	-
-	70mm	60450469002	60450468002	R4011731	R4011511[72]	-	-	-	-
-	64mm	60450474001	60450473001	R4011731	R4011511[72]	-	-	-	-
-	70mm	60450469002	60450468002	R4011731	R4011511[72]	-	-	-	-
-	70mm	60450469002	60450468002	R4011731	R4011511[72]	-	-	-	-
-	70mm	60450469002	60450468002	R4011731	R4011511[72]	-	-	-	-
-	64mm	60450474001	60450473001	R4011731	R4011511[72]	-	-	-	-
-	64mm	60450474001	60450473001	R4011731	R4011511[72]	-	-	-	-
-	64mm	60450474001	60450473001	R4011731	R4011511[72]	-	-	-	-
-	70mm	60450469002	60450468002	R4011731	R4011511[72]	-	-	-	-
-	70mm	60450469002	60450468002	R4011731	R4011511[72]	-	-	-	-
-	64mm	60450474001	60450473001	R4011731	R4011511[72]	-	-	-	-
-	64mm	60450474001	60450473001	R4011731	R4011511[72]	-	-	-	-
-	64mm	60450474001	60450473001	R4011731	R4011511[72]	-	-	-	-
-	70mm	60450469002	60450468002	R4011731	R4011511[72]	-	-	-	-
-	70mm	60450469002	60450468002	R4011731	R4011511[72]	-	-	-	-
-	64mm	60450474001	60450473001	R4011731	R4011511[72]	-	-	-	-
-	64mm	60450474001	60450473001	R4011731	R4011511[72]	-	-	-	-
-	70mm	60450469002	60450468002	R4011731	R4011511[72]	-	-	-	-
-	64mm	60450474001	60450473001	R4011731	R4011511[72]	-	-	-	-
-	70mm	60450469002	60450468002	R4011731	R4011511[72]	-	-	-	-
-	64mm	60450474001	60450473001	R4011731	R4011511[72]	-	-	-	-
-	64mm	60450474001	60450473001	R4011731	R4011511[72]	-	-	-	-
-	70mm	60450469002	60450468002	R4011731	R4011511[72]	-	-	-	-
-	70mm	60450469002	60450468002	R4011731	R4011511[72]	-	-	-	-
-	64mm	60450474001	60450473001	R4011731	R4011511[72]	-	-	-	-
-	64mm	60450474001	60450473001	R4011731	R4011511[72]	-	-	-	-
-	70mm	60450469002	60450468002	R4011731	R4011511[72]	-	-	-	-
-	64mm	60450474001	60450473001	R4011731	R4011511[72]	-	-	-	-
-	64mm	60450474001	60450473001	R4011731	R4011511[72]	-	-	-	-
-	70mm	60450469002	60450468002	R4011731	R4011511[72]	-	-	-	-
-	70mm	60450469002	60450468002	R4011731	R4011511[72]	-	-	-	-
-	64mm	60450474001	60450473001	R4011731	R4011511[72]	-	-	-	-
-	64mm	60450474001	60450473001	R4011731	R4011511[72]	-	-	-	-
-	70mm	60450469002	60450468002	R4011731	R4011511[72]	-	-	-	-
-	64mm	60450474001	60450473001	R4011731	R4011511[72]	-	-	-	-
-	70mm	60450469002	60450468002	R4011731	R4011511[72]	-	-	-	-
-	64mm	60450474001	60450473001	R4011731	R4011511[72]	-	-	-	-
-	70mm	60450469002	60450468002	R4011731	R4011511[72]	-	-	-	-
-	70mm	60450469002	60450468002	R4011731	R4011511[72]	-	-	-	-
-	64mm	60450474001	60450473001	R4011731	R4011511[72]	-	-	-	-
-	70mm	60450469002	60450468002	R4011731	R4011511[72]	-	-	-	-
-	64mm	60450474001	60450473001	R4011731	R4011511[72]	-	-	-	-
-	70mm	60450469002	60450468002	R4011731	R4011511[72]	-	-	-	-

MAKE MODEL YEAR AXLE CODE AXLE WEIGHT	AXLE & BRK. TYPE	BRK. MFG.	BRAKE SIZE	FMSI	MERITOR DISC PAD OR BRAKE SHOE	MERITOR GUIDE PIN OR RETURN SPRING KIT	MERITOR CALIPER HWD. KIT OR RETURN SPRING KIT	MERITOR ADJUSTER KIT (LEFT WHEEL)	MERITOR ADJUSTER KIT (RIGHT WHEEL)
BLUEBIRD(Cont.)									
BBCV(Cont.)									
2001									
	Rd	Meritor		7636 - D1032	MD769	N/A	R4011729	-	-
	Rd	Meritor		7636 - D1032	MD769	N/A	R4011729	-	-
C1FE									
2007									
Type D Commerical Series	Fd	Meritor		7636 - D769	MD769	N/A	R4011729	-	-
	Fd	Meritor		7636 - D769	MD769	N/A	R4011729	-	-
	Fd	Meritor		7636 - D1032	MD769	N/A	R4011729	-	-
	Fd	Meritor		7636 - D1032	MD769	N/A	R4011729	-	-
	Rd	Meritor		7636 - D1032	MD769	N/A	R4011729	-	-
	Rd	Meritor		7636 - D769	MD769	N/A	R4011729	-	-
	Rd	Meritor		7636 - D769	MD769	N/A	R4011729	-	-
	Rd	Meritor		7636 - D1032	MD769	N/A	R4011729	-	-
2006									
	Fd	Meritor		7636 - D769	MD769	N/A	R4011729	-	-
	Fd	Meritor		7636 - D1032	MD769	N/A	R4011729	-	-
	Fd	Meritor		7636 - D1032	MD769	N/A	R4011729	-	-
	Fd	Meritor		7636 - D769	MD769	N/A	R4011729	-	-
	Rd	Meritor		7636 - D769	MD769	N/A	R4011729	-	-
	Rd	Meritor		7636 - D1032	MD769	N/A	R4011729	-	-
	Rd	Meritor		7636 - D1032	MD769	N/A	R4011729	-	-
	Rd	Meritor		7636 - D769	MD769	N/A	R4011729	-	-
2005									
	Fd	Meritor		7636 - D769	MD769	N/A	R4011729	-	-
	Fd	Meritor		7636 - D1032	MD769	N/A	R4011729	-	-
	Fd	Meritor		7636 - D1032	MD769	N/A	R4011729	-	-
	Fd	Meritor		7636 - D769	MD769	N/A	R4011729	-	-
	Rd	Meritor		7636 - D1032	MD769	N/A	R4011729	-	-
	Rd	Meritor		7636 - D1032	MD769	N/A	R4011729	-	-
	Rd	Meritor		7636 - D769	MD769	N/A	R4011729	-	-
	Rd	Meritor		7636 - D769	MD769	N/A	R4011729	-	-
2004									
	Fd	Meritor		7636 - D1032	MD769	N/A	R4011729	-	-
	Fd	Meritor		7636 - D1032	MD769	N/A	R4011729	-	-
	Fd	Meritor		7636 - D769	MD769	N/A	R4011729	-	-
	Fd	Meritor		7636 - D769	MD769	N/A	R4011729	-	-
	Rd	Meritor		7636 - D1032	MD769	N/A	R4011729	-	-
	Rd	Meritor		7636 - D769	MD769	N/A	R4011729	-	-
	Rd	Meritor		7636 - D769	MD769	N/A	R4011729	-	-
	Rd	Meritor		7636 - D1032	MD769	N/A	R4011729	-	-
2003									
	Fd	Meritor		7636 - D1032	MD769	N/A	R4011729	-	-
	Fd	Meritor		7636 - D769	MD769	N/A	R4011729	-	-
	Fd	Meritor		7636 - D1032	MD769	N/A	R4011729	-	-
	Fd	Meritor		7636 - D769	MD769	N/A	R4011729	-	-
	Rd	Meritor		7636 - D1032	MD769	N/A	R4011729	-	-
	Rd	Meritor		7636 - D769	MD769	N/A	R4011729	-	-
	Rd	Meritor		7636 - D769	MD769	N/A	R4011729	-	-
	Rd	Meritor		7636 - D1032	MD769	N/A	R4011729	-	-
2002									
	Fd	Bendix		7142 - D225	MD225	N/A	R40H5522	-	-
	Fd	Bosch		7654 - D786	MD786A	R4011754	N/A	-	-
	Fd	Bosch		7655 - D786	MD786	R4011754	N/A	-	-
	Fd	Meritor		7636 - D769	MD769	N/A	R4011121	-	-
	Fd	Meritor		7636 - D1032	MD769	N/A	R4011121	-	-
	Rd	Bendix		7142 - D225	MD225	N/A	R40H5522	-	-
	Rd	Bosch		7655 - D786	MD786	R4011754	N/A	-	-
	Rd	Bosch		7654 - D786	MD786A	R4011754	N/A	-	-
	Rd	Meritor		7636 - D769	MD769	N/A	R4011121	-	-
	Rd	Meritor		7636 - D1032	MD769	N/A	R4011121	-	-
2001									
	Fd	Bendix		7142 - D225	MD225	N/A	R40H5522	-	-
	Fd	Bosch		7655 - D786	MD786	R4011754	N/A	-	-
	Fd	Bosch		7654 - D786	MD786A	R4011754	N/A	-	-

72 - Phenolic/Steel Face

201 - Steel Piston

MERITOR DRUM OR ROTOR NO.	CALIPER OR CYLINDER BORE SIZE	MERITOR CALIPER OR WHEEL CYLINDER (LEFT)	MERITOR CALIPER OR WHEEL CYLINDER (RIGHT)	MERITOR CALIPER OR WHEEL CYLINDER REPAIR KIT	MERITOR CALIPER PISTON	MERITOR MASTER CYLINDER	MERITOR MASTER CYLINDER KIT	MERITOR BRAKE HOSE (LEFT)	MERITOR BRAKE HOSE (RIGHT)
BLUEBIRD(Cont.)									
BBCV(Cont.)									
-	64mm	60450474001	60450473001	R4011731	R4011511[72]	-	-	-	-
-	70mm	60450469002	60450468002	R4011731	R4011511[72]	-	-	-	-
C1FE									
-	64mm	60450474001	60450473001	R4011731	R4011511[72]	-	-	-	-
-	70mm	60450469002	60450468002	R4011731	R4011511[72]	-	-	-	-
-	70mm	60450469002	60450468002	R4011731	R4011511[72]	-	-	-	-
-	64mm	60450474001	60450473001	R4011731	R4011511[72]	-	-	-	-
-	64mm	60450474001	60450473001	R4011731	R4011511[72]	-	-	-	-
-	64mm	60450474001	60450473001	R4011731	R4011511[72]	-	-	-	-
-	70mm	60450469002	60450468002	R4011731	R4011511[72]	-	-	-	-
-	70mm	60450469002	60450468002	R4011731	R4011511[72]	-	-	-	-
-	64mm	60450474001	60450473001	R4011731	R4011511[72]	-	-	-	-
-	64mm	60450474001	60450473001	R4011731	R4011511[72]	-	-	-	-
-	70mm	60450469002	60450468002	R4011731	R4011511[72]	-	-	-	-
-	70mm	60450469002	60450468002	R4011731	R4011511[72]	-	-	-	-
-	70mm	60450469002	60450468002	R4011731	R4011511[72]	-	-	-	-
-	70mm	60450469002	60450468002	R4011731	R4011511[72]	-	-	-	-
-	64mm	60450474001	60450473001	R4011731	R4011511[72]	-	-	-	-
-	64mm	60450474001	60450473001	R4011731	R4011511[72]	-	-	-	-
-	70mm	60450469002	60450468002	R4011731	R4011511[72]	-	-	-	-
-	70mm	60450469002	60450468002	R4011731	R4011511[72]	-	-	-	-
-	64mm	60450474001	60450473001	R4011731	R4011511[72]	-	-	-	-
-	70mm	60450469002	60450468002	R4011731	R4011511[72]	-	-	-	-
-	70mm	60450469002	60450468002	R4011731	R4011511[72]	-	-	-	-
-	64mm	60450474001	60450473001	R4011731	R4011511[72]	-	-	-	-
-	64mm	60450474001	60450473001	R4011731	R4011511[72]	-	-	-	-
-	70mm	60450469002	60450468002	R4011731	R4011511[72]	-	-	-	-
-	64mm	60450474001	60450473001	R4011731	R4011511[72]	-	-	-	-
-	64mm	60450474001	60450473001	R4011731	R4011511[72]	-	-	-	-
-	70mm	60450469002	60450468002	R4011731	R4011511[72]	-	-	-	-
-	70mm	60450469002	60450468002	R4011731	R4011511[72]	-	-	-	-
-	64mm	60450474001	60450473001	R4011731	R4011511[72]	-	-	-	-
-	64mm	60450474001	60450473001	R4011731	R4011511[72]	-	-	-	-
-	64mm	60450474001	60450473001	R4011731	R4011511[72]	-	-	-	-
-	70mm	60450469002	60450468002	R4011731	R4011511[72]	-	-	-	-
-	64mm	60450474001	60450473001	R4011731	R4011511[72]	-	-	-	-
-	70mm	60450469002	60450468002	R4011731	R4011511[72]	-	-	-	-
-	2.88"	R4255250	R4255250	R4066365	R4090096[72]	-	-	-	-
-	66mm	R4255849	R4255849	R4011752	R4011751[72]	-	-	-	-
-	73mm	R4255850	R4255850	R4011758	R4011757[72]	-	-	-	-
-	70mm	60050313	60050312	-	-	-	-	-	-
-	70mm	60450469002	60450468002	R4011731	R4011511[201]	-	-	-	-
-	2.88"	R4255250	R4255250	R4066365	R4090096[72]	-	-	-	-
-	73mm	R4255850	R4255850	R4011758	R4011757[72]	-	-	-	-
-	66mm	R4255849	R4255849	R4011752	R4011751[72]	-	-	-	-
-	70mm	60450469002	60450468002	R4011731	R4011511[201]	-	-	-	-
-	70mm	60450469002	60450468002	R4011731	R4011511[201]	-	-	-	-
-	2.88"	R4255250	R4255250	R4066365	R4090096[72]	-	-	-	-
-	73mm	R4255850	R4255850	R4011758	R4011757[72]	-	-	-	-
-	66mm	R4255849	R4255849	R4011752	R4011751[72]	-	-	-	-

MAKE MODEL YEAR AXLE CODE AXLE WEIGHT	AXLE & BRK. TYPE	BRK. MFG.	BRAKE SIZE	FMSI	MERITOR DISC PAD OR BRAKE SHOE	MERITOR GUIDE PIN OR RETURN SPRING KIT	MERITOR CALIPER HWD. KIT OR RETURN SPRING KIT	MERITOR ADJUSTER KIT (LEFT WHEEL)	MERITOR ADJUSTER KIT (RIGHT WHEEL)
BLUEBIRD(Cont.)									
C1FE(Cont.)									
2001									
	Fd	Meritor		7636 - D769	MD769	N/A	R4011121	-	-
	Fd	Meritor		7636 - D1032	MD769	N/A	R4011121	-	-
	Rd	Bendix		7142 - D225	MD225	N/A	R40H5522	-	-
	Rd	Bosch		7655 - D786	MD786	R4011754	N/A	-	-
	Rd	Bosch		7654 - D786	MD786A	R4011754	N/A	-	-
	Rd	Meritor		7636 - D1032	MD769	N/A	R4011121	-	-
	Rd	Meritor		7636 - D769	MD769	N/A	R4011121	-	-
2000									
	Fd	Bendix		7142 - D225	MD225	N/A	R40H5522	-	-
	Fd	Bosch		7654 - D786	MD786A	R4011754	N/A	-	-
	Fd	Bosch		7655 - D786	MD786	R4011754	N/A	-	-
	Fd	Meritor		7636 - D1032	MD769	N/A	R4011121	-	-
	Fd	Meritor		7636 - D769	MD769	N/A	R4011121	-	-
	Rd	Bendix		7142 - D225	MD225	N/A	R40H5522	-	-
	Rd	Bosch		7654 - D786	MD786A	R4011754	N/A	-	-
	Rd	Bosch		7655 - D786	MD786	R4011754	N/A	-	-
	Rd	Meritor		7636 - D769	MD769	N/A	R4011121	-	-
	Rd	Meritor		7636 - D1032	MD769	N/A	R4011121	-	-
1999									
	Fd	Bendix		7142 - D225	MD225	N/A	R40H5522	-	-
	Fd	Bosch		7655 - D786	MD786	R4011754	N/A	-	-
	Fd	Bosch		7654 - D786	MD786A	R4011754	N/A	-	-
	Fd	Meritor		7636 - D769	MD769	N/A	R4011121	-	-
	Fd	Meritor		7636 - D1032	MD769	N/A	R4011121	-	-
	Rd	Bendix		7142 - D225	MD225	N/A	R40H5522	-	-
	Rd	Bosch		7655 - D786	MD786	R4011754	N/A	-	-
	Rd	Bosch		7654 - D786	MD786A	R4011754	N/A	-	-
	Rd	Meritor		7636 - D1032	MD769	N/A	R4011121	-	-
	Rd	Meritor		7636 - D769	MD769	N/A	R4011121	-	-
C3FE									
2007									
Type D Commerical Shell	Fd	Meritor		7636 - D1032	MD769	N/A	R4011729	-	-
	Fd	Meritor		7636 - D769	MD769	N/A	R4011729	-	-
	Fd	Meritor		7636 - D1032	MD769	N/A	R4011729	-	-
	Fd	Meritor		7636 - D769	MD769	N/A	R4011729	-	-
	Rd	Meritor		7636 - D1032	MD769	N/A	R4011729	-	-
	Rd	Meritor		7636 - D1032	MD769	N/A	R4011729	-	-
	Rd	Meritor		7636 - D769	MD769	N/A	R4011729	-	-
	Rd	Meritor		7636 - D769	MD769	N/A	R4011729	-	-
2006									
	Fd	Meritor		7636 - D769	MD769	N/A	R4011729	-	-
	Fd	Meritor		7636 - D1032	MD769	N/A	R4011729	-	-
	Fd	Meritor		7636 - D1032	MD769	N/A	R4011729	-	-
	Fd	Meritor		7636 - D769	MD769	N/A	R4011729	-	-
	Rd	Meritor		7636 - D1032	MD769	N/A	R4011729	-	-
	Rd	Meritor		7636 - D1032	MD769	N/A	R4011729	-	-
	Rd	Meritor		7636 - D769	MD769	N/A	R4011729	-	-
	Rd	Meritor		7636 - D769	MD769	N/A	R4011729	-	-
2005									
	Fd	Meritor		7636 - D1032	MD769	N/A	R4011729	-	-
	Fd	Meritor		7636 - D769	MD769	N/A	R4011729	-	-
	Fd	Meritor		7636 - D769	MD769	N/A	R4011729	-	-
	Fd	Meritor		7636 - D1032	MD769	N/A	R4011729	-	-
	Rd	Meritor		7636 - D769	MD769	N/A	R4011729	-	-
	Rd	Meritor		7636 - D1032	MD769	N/A	R4011729	-	-
	Rd	Meritor		7636 - D769	MD769	N/A	R4011729	-	-
	Rd	Meritor		7636 - D1032	MD769	N/A	R4011729	-	-
2004									
	Fd	Meritor		7636 - D1032	MD769	N/A	R4011729	-	-
	Fd	Meritor		7636 - D1032	MD769	N/A	R4011729	-	-
	Fd	Meritor		7636 - D769	MD769	N/A	R4011729	-	-
	Fd	Meritor		7636 - D769	MD769	N/A	R4011729	-	-
	Rd	Meritor		7636 - D1032	MD769	N/A	R4011729	-	-

72 - Phenolic/Steel Face

201 - Steel Piston

MERITOR DRUM OR ROTOR NO.	CALIPER OR CYLINDER BORE SIZE	MERITOR CALIPER OR WHEEL CYLINDER (LEFT)	MERITOR CALIPER OR WHEEL CYLINDER (RIGHT)	MERITOR CALIPER OR WHEEL CYLINDER REPAIR KIT	MERITOR CALIPER PISTON	MERITOR MASTER CYLINDER	MERITOR MASTER CYLINDER KIT	MERITOR BRAKE HOSE (LEFT)	MERITOR BRAKE HOSE (RIGHT)
									BLUEBIRD(Cont.)
									C1FE(Cont.)
-	70mm	60050313	60050312	-	-	-	-	-	-
-	70mm	60450469002	60450468002	R4011731	R4011511[201]	-	-	-	-
-	2.88"	R4255250	R4255250	R4066365	R4090096[72]	-	-	-	-
-	73mm	R4255850	R4255850	R4011758	R4011757[72]	-	-	-	-
-	66mm	R4255849	R4255849	R4011752	R4011751[72]	-	-	-	-
-	70mm	60450469002	60450468002	R4011731	R4011511[201]	-	-	-	-
-	70mm	60450469002	60450468002	R4011731	R4011511[201]	-	-	-	-
-	2.88"	R4255250	R4255250	R4066365	R4090096[72]	-	-	-	-
-	66mm	R4255849	R4255849	R4011752	R4011751[72]	-	-	-	-
-	73mm	R4255850	R4255850	R4011758	R4011757[72]	-	-	-	-
-	70mm	60450469002	60450468002	R4011731	R4011511[201]	-	-	-	-
-	70mm	60050313	60050312	-	-	-	-	-	-
-	2.88"	R4255250	R4255250	R4066365	R4090096[72]	-	-	-	-
-	66mm	R4255849	R4255849	R4011752	R4011751[72]	-	-	-	-
-	73mm	R4255850	R4255850	R4011758	R4011757[72]	-	-	-	-
-	70mm	60450469002	60450468002	R4011731	R4011511[201]	-	-	-	-
-	70mm	60450469002	60450468002	R4011731	R4011511[201]	-	-	-	-
-	2.88"	R4255250	R4255250	R4066365	R4090096[72]	-	-	-	-
-	73mm	R4255850	R4255850	R4011758	R4011757[72]	-	-	-	-
-	66mm	R4255849	R4255849	R4011752	R4011751[72]	-	-	-	-
-	70mm	60050313	60050312	-	-	-	-	-	-
-	70mm	60450469002	60450468002	R4011731	R4011511[201]	-	-	-	-
-	2.88"	R4255250	R4255250	R4066365	R4090096[72]	-	-	-	-
-	73mm	R4255850	R4255850	R4011758	R4011757[72]	-	-	-	-
-	66mm	R4255849	R4255849	R4011752	R4011751[72]	-	-	-	-
-	70mm	60450469002	60450468002	R4011731	R4011511[201]	-	-	-	-
-	70mm	60450469002	60450468002	R4011731	R4011511[201]	-	-	-	-
									C3FE
-	64mm	60450474001	60450473001	R4011731	R4011511[72]	-	-	-	-
-	70mm	60450469002	60450468002	R4011731	R4011511[72]	-	-	-	-
-	70mm	60450469002	60450468002	R4011731	R4011511[72]	-	-	-	-
-	64mm	60450474001	60450473001	R4011731	R4011511[72]	-	-	-	-
-	70mm	60450469002	60450468002	R4011731	R4011511[72]	-	-	-	-
-	64mm	60450474001	60450473001	R4011731	R4011511[72]	-	-	-	-
-	64mm	60450474001	60450473001	R4011731	R4011511[72]	-	-	-	-
-	70mm	60450469002	60450468002	R4011731	R4011511[72]	-	-	-	-
-	70mm	60450469002	60450468002	R4011731	R4011511[72]	-	-	-	-
-	64mm	60450474001	60450473001	R4011731	R4011511[72]	-	-	-	-
-	64mm	60450474001	60450473001	R4011731	R4011511[72]	-	-	-	-
-	70mm	60450469002	60450468002	R4011731	R4011511[72]	-	-	-	-
-	64mm	60450474001	60450473001	R4011731	R4011511[72]	-	-	-	-
-	70mm	60450469002	60450468002	R4011731	R4011511[72]	-	-	-	-
-	64mm	60450474001	60450473001	R4011731	R4011511[72]	-	-	-	-
-	64mm	60450474001	60450473001	R4011731	R4011511[72]	-	-	-	-
-	70mm	60450469002	60450468002	R4011731	R4011511[72]	-	-	-	-
-	70mm	60450469002	60450468002	R4011731	R4011511[72]	-	-	-	-
-	64mm	60450474001	60450473001	R4011731	R4011511[72]	-	-	-	-
-	70mm	60450469002	60450468002	R4011731	R4011511[72]	-	-	-	-
-	64mm	60450474001	60450473001	R4011731	R4011511[72]	-	-	-	-
-	70mm	60450469002	60450468002	R4011731	R4011511[72]	-	-	-	-
-	64mm	60450474001	60450473001	R4011731	R4011511[72]	-	-	-	-

MAKE MODEL YEAR AXLE CODE AXLE WEIGHT	AXLE & BRK. TYPE	BRK. MFG.	BRAKE SIZE	FMSI	MERITOR DISC PAD OR BRAKE SHOE	MERITOR GUIDE PIN OR RETURN SPRING KIT	MERITOR CALIPER HWD. KIT OR RETURN SPRING KIT	MERITOR ADJUSTER KIT (LEFT WHEEL)	MERITOR ADJUSTER KIT (RIGHT WHEEL)
BLUEBIRD(Cont.)									
C3FE(Cont.)									
2004									
	Rd	Meritor		7636 - D769	MD769	N/A	R4011729	-	-
	Rd	Meritor		7636 - D1032	MD769	N/A	R4011729	-	-
	Rd	Meritor		7636 - D769	MD769	N/A	R4011729	-	-
2003									
	Fd	Meritor		7636 - D769	MD769	N/A	R4011729	-	-
	Fd	Meritor		7636 - D769	MD769	N/A	R4011729	-	-
	Fd	Meritor		7636 - D1032	MD769	N/A	R4011729	-	-
	Fd	Meritor		7636 - D1032	MD769	N/A	R4011729	-	-
	Rd	Meritor		7636 - D769	MD769	N/A	R4011729	-	-
	Rd	Meritor		7636 - D769	MD769	N/A	R4011729	-	-
	Rd	Meritor		7636 - D1032	MD769	N/A	R4011729	-	-
	Rd	Meritor		7636 - D1032	MD769	N/A	R4011729	-	-
2002									
	Fd	Meritor		7636 - D1032	MD769	N/A	R4011729	-	-
	Fd	Meritor		7636 - D769	MD769	N/A	R4011729	-	-
	Fd	Meritor		7636 - D769	MD769	N/A	R4011729	-	-
	Fd	Meritor		7636 - D1032	MD769	N/A	R4011729	-	-
	Rd	Meritor		7636 - D769	MD769	N/A	R4011729	-	-
	Rd	Meritor		7636 - D1032	MD769	N/A	R4011729	-	-
	Rd	Meritor		7636 - D769	MD769	N/A	R4011729	-	-
	Rd	Meritor		7636 - D1032	MD769	N/A	R4011729	-	-
2001									
	Fd	Meritor		7636 - D1032	MD769	N/A	R4011729	-	-
	Fd	Meritor		7636 - D769	MD769	N/A	R4011729	-	-
	Rd	Meritor		7636 - D769	MD769	N/A	R4011729	-	-
	Rd	Meritor		7636 - D1032	MD769	N/A	R4011729	-	-
CSFE									
2004									
Type D Commerical Series	Fd	Meritor		7636 - D769	MD769	N/A	R4011729	-	-
	Fd	Meritor		7636 - D769	MD769	N/A	R4011729	-	-
	Fd	Meritor		7636 - D1032	MD769	N/A	R4011729	-	-
	Fd	Meritor		7636 - D1032	MD769	N/A	R4011729	-	-
	Rd	Meritor		7636 - D1032	MD769	N/A	R4011729	-	-
	Rd	Meritor		7636 - D769	MD769	N/A	R4011729	-	-
	Rd	Meritor		7636 - D769	MD769	N/A	R4011729	-	-
	Rd	Meritor		7636 - D1032	MD769	N/A	R4011729	-	-
2003									
	Fd	Meritor		7636 - D769	MD769	N/A	R4011729	-	-
	Fd	Meritor		7636 - D769	MD769	N/A	R4011729	-	-
	Fd	Meritor		7636 - D1032	MD769	N/A	R4011729	-	-
	Fd	Meritor		7636 - D1032	MD769	N/A	R4011729	-	-
	Rd	Meritor		7636 - D1032	MD769	N/A	R4011729	-	-
	Rd	Meritor		7636 - D1032	MD769	N/A	R4011729	-	-
	Rd	Meritor		7636 - D769	MD769	N/A	R4011729	-	-
	Rd	Meritor		7636 - D769	MD769	N/A	R4011729	-	-
2002									
	Fd	Bendix		7142 - D225	MD225	N/A	R40H5522	-	-
	Fd	Bosch		7654 - D786	MD786A	R4011754	N/A	-	-
	Fd	Bosch		7655 - D786	MD786	R4011754	N/A	-	-
	Fd	Meritor		7636 - D1032	MD769	N/A	R4011121	-	-
	Fd	Meritor		7636 - D769	MD769	N/A	R4011121	-	-
	Rd	Bendix		7142 - D225	MD225	N/A	R40H5522	-	-
	Rd	Bosch		7654 - D786	MD786A	R4011754	N/A	-	-
	Rd	Bosch		7655 - D786	MD786	R4011754	N/A	-	-
	Rd	Meritor		7636 - D1032	MD769	N/A	R4011121	-	-
	Rd	Meritor		7636 - D769	MD769	N/A	R4011121	-	-
2001									
	Fd	Bendix		7142 - D225	MD225	N/A	R40H5522	-	-
	Fd	Bosch		7654 - D786	MD786A	R4011754	N/A	-	-
	Fd	Bosch		7655 - D786	MD786	R4011754	N/A	-	-
	Rd	Bendix		7142 - D225	MD225	N/A	R40H5522	-	-
	Rd	Bosch		7655 - D786	MD786	R4011754	N/A	-	-
	Rd	Bosch		7654 - D786	MD786A	R4011754	N/A	-	-

72 - Phenolic/Steel Face

201 - Steel Piston

MERITOR DRUM OR ROTOR NO.	CALIPER OR CYLINDER BORE SIZE	MERITOR CALIPER OR WHEEL CYLINDER (LEFT)	MERITOR CALIPER OR WHEEL CYLINDER (RIGHT)	MERITOR CALIPER OR WHEEL CYLINDER REPAIR KIT	MERITOR CALIPER PISTON	MERITOR MASTER CYLINDER	MERITOR MASTER CYLINDER KIT	MERITOR BRAKE HOSE (LEFT)	MERITOR BRAKE HOSE (RIGHT)
									BLUEBIRD(Cont.)
									C3FE(Cont.)
-	64mm	60450474001	60450473001	R4011731	R4011511[72]	-	-	-	-
-	70mm	60450469002	60450468002	R4011731	R4011511[72]	-	-	-	-
-	70mm	60450469002	60450468002	R4011731	R4011511[72]	-	-	-	-
-	64mm	60450474001	60450473001	R4011731	R4011511[72]	-	-	-	-
-	70mm	60450469002	60450468002	R4011731	R4011511[72]	-	-	-	-
-	70mm	60450469002	60450468002	R4011731	R4011511[72]	-	-	-	-
-	64mm	60450474001	60450473001	R4011731	R4011511[72]	-	-	-	-
-	70mm	60450469002	60450468002	R4011731	R4011511[72]	-	-	-	-
-	64mm	60450474001	60450473001	R4011731	R4011511[72]	-	-	-	-
-	64mm	60450474001	60450473001	R4011731	R4011511[72]	-	-	-	-
-	70mm	60450469002	60450468002	R4011731	R4011511[72]	-	-	-	-
-	64mm	60450474001	60450473001	R4011731	R4011511[72]	-	-	-	-
-	70mm	60450469002	60450468002	R4011731	R4011511[72]	-	-	-	-
-	70mm	60450469002	60450468002	R4011731	R4011511[72]	-	-	-	-
-	64mm	60450474001	60450473001	R4011731	R4011511[72]	-	-	-	-
-	70mm	60050313	60050312	-	-	-	-	-	-
-	70mm	60050313	60050312	-	-	-	-	-	-
-	70mm	60050313	60050312	-	-	-	-	-	-
-	70mm	60050313	60050312	-	-	-	-	-	-
									CSFE
-	70mm	60450469002	60450468002	R4011731	R4011511[72]	-	-	-	-
-	64mm	60450474001	60450473001	R4011731	R4011511[72]	-	-	-	-
-	64mm	60450474001	60450473001	R4011731	R4011511[72]	-	-	-	-
-	70mm	60450469002	60450468002	R4011731	R4011511[72]	-	-	-	-
-	64mm	60450474001	60450473001	R4011731	R4011511[72]	-	-	-	-
-	64mm	60450474001	60450473001	R4011731	R4011511[72]	-	-	-	-
-	70mm	60450469002	60450468002	R4011731	R4011511[72]	-	-	-	-
-	70mm	60450469002	60450468002	R4011731	R4011511[72]	-	-	-	-
-	70mm	60450469002	60450468002	R4011731	R4011511[72]	-	-	-	-
-	64mm	60450474001	60450473001	R4011731	R4011511[72]	-	-	-	-
-	64mm	60450474001	60450473001	R4011731	R4011511[72]	-	-	-	-
-	70mm	60450469002	60450468002	R4011731	R4011511[72]	-	-	-	-
-	70mm	60450469002	60450468002	R4011731	R4011511[72]	-	-	-	-
-	70mm	60450469002	60450468002	R4011731	R4011511[72]	-	-	-	-
-	64mm	60450474001	60450473001	R4011731	R4011511[72]	-	-	-	-
-	64mm	60450474001	60450473001	R4011731	R4011511[72]	-	-	-	-
-	70mm	60450469002	60450468002	R4011731	R4011511[72]	-	-	-	-
-	70mm	60450469002	60450468002	R4011731	R4011511[72]	-	-	-	-
-	2.88"	R4255250	R4255250	R4066365	R4090096[72]	-	-	-	-
-	66mm	R4255849	R4255849	R4011752	R4011751[72]	-	-	-	-
-	73mm	R4255850	R4255850	R4011758	R4011757[72]	-	-	-	-
-	70mm	60450469002	60450468002	R4011731	R4011511[201]	-	-	-	-
-	70mm	60050313	60050312	-	-	-	-	-	-
-	2.88"	R4255250	R4255250	R4066365	R4090096[72]	-	-	-	-
-	66mm	R4255849	R4255849	R4011752	R4011751[72]	-	-	-	-
-	73mm	R4255850	R4255850	R4011758	R4011757[72]	-	-	-	-
-	70mm	60450469002	60450468002	R4011731	R4011511[201]	-	-	-	-
-	70mm	60450469002	60450468002	R4011731	R4011511[201]	-	-	-	-
-	2.88"	R4255250	R4255250	R4066365	R4090096[72]	-	-	-	-
-	66mm	R4255849	R4255849	R4011752	R4011751[72]	-	-	-	-
-	73mm	R4255850	R4255850	R4011758	R4011757[72]	-	-	-	-
-	2.88"	R4255250	R4255250	R4066365	R4090096[72]	-	-	-	-
-	73mm	R4255850	R4255850	R4011758	R4011757[72]	-	-	-	-
-	66mm	R4255849	R4255849	R4011752	R4011751[72]	-	-	-	-

MAKE MODEL YEAR AXLE CODE AXLE WEIGHT	AXLE & BRK. TYPE	BRK. MFG.	BRAKE SIZE	FMSI	MERITOR DISC PAD OR BRAKE SHOE	MERITOR GUIDE PIN OR RETURN SPRING KIT	MERITOR CALIPER HWD. KIT OR RETURN SPRING KIT	MERITOR ADJUSTER KIT (LEFT WHEEL)	MERITOR ADJUSTER KIT (RIGHT WHEEL)
BLUEBIRD(Cont.)									
CSFE(Cont.)									
2000 Type D Commerical Series	Fd	Bendix		7142 - D225	MD225	N/A	R40H5522	-	-
	Fd	Bosch		7655 - D786	MD786	R4011754	N/A	-	-
	Fd	Bosch		7654 - D786	MD786A	R4011754	N/A	-	-
	Rd	Bendix		7142 - D225	MD225	N/A	R40H5522	-	-
	Rd	Bosch		7655 - D786	MD786	R4011754	N/A	-	-
	Rd	Bosch		7654 - D786	MD786A	R4011754	N/A	-	-
1999	Fd	Bendix		7142 - D225	MD225	N/A	R40H5522	-	-
	Rd	Bendix		7142 - D225	MD225	N/A	R40H5522	-	-
1998	Fd	Bendix		7142 - D225	MD225	N/A	R40H5522	-	-
	Rd	Bendix		7142 - D225	MD225	N/A	R40H5522	-	-
1997	Fd	Bendix		7142 - D225	MD225	N/A	R40H5522	-	-
	Rd	Bendix		7142 - D225	MD225	N/A	R40H5522	-	-
1996	Fd	Bendix		7142 - D225	MD225	N/A	R40H5522	-	-
	Rd	Bendix		7142 - D225	MD225	N/A	R40H5522	-	-
1995	Fd	Bendix		7142 - D225	MD225	N/A	R40H5522	-	-
	Rd	Bendix		7142 - D225	MD225	N/A	R40H5522	-	-
1994	Fd	Bendix		7142 - D225	MD225	N/A	R40H5522	-	-
	Rd	Bendix		7142 - D225	MD225	N/A	R40H5522	-	-
1993	Fd	Bendix		7142 - D225	MD225	N/A	R40H5522	-	-
	Rd	Bendix		7142 - D225	MD225	N/A	R40H5522	-	-
1992	Fd	Bendix		7142 - D225	MD225	N/A	R40H5522	-	-
	Rd	Bendix		7142 - D225	MD225	N/A	R40H5522	-	-
1991	Fd	Bendix		7142 - D225	MD225	N/A	R40H5522	-	-
	Rd	Bendix		7142 - D225	MD225	N/A	R40H5522	-	-
1990	Fd	Bendix		7142 - D225	MD225	N/A	R40H5522	-	-
	Rd	Bendix		7142 - D225	MD225	N/A	R40H5522	-	-
1989	Fd	Bendix		7142 - D225	MD225	N/A	R40H5522	-	-
	Rd	Bendix		7142 - D225	MD225	N/A	R40H5522	-	-
SCHOOL BUS									
2005 6000 lb	Fd	Bosch		7654 - D786	MD786A	R4011754	NR	NR	NR
FD965 10,700 lb.	Fd	Meritor		7636 - D769	MD769	NR	R4011729	NR	NR
FF966 / F943 12,000 lb	Fd	Meritor		7636 - D769	MD769	NR	R4011729	NR	NR
RS-15 Wide Track 15,000 lb	Rd	Meritor		7636 - D769	MD769	NR	R4011729	NR	NR
RS-19 L-Spindle 19,000 lb	Rd	Meritor		7636 - D769	MD769	NR	R4011729	NR	NR
RS-21 R-Spindle 21,000 lb.	Rd	Meritor		7636 - D769	MD769	NR	R4011729	NR	NR
2004 FD965 10,700 lb.	Fd	Meritor		7636 - D769	MD769	NR	R4011729	NR	NR
FF966 / F943 12,000 lb	Fd	Meritor		7636 - D769	MD769	NR	R4011729	NR	NR
RS-15 Wide Track 15,000 lb	Rd	Meritor		7636 - D769	MD769	NR	R4011729	NR	NR
RS-19 L-Spindle 19,000 lb	Rd	Meritor		7636 - D769	MD769	NR	R4011729	NR	NR

72 - Phenolic/Steel Face

356 - Single Hydraulic System, Bosch Cylinder, after Serial No. Q20000, 18,500lb. Rear Axle

MERITOR DRUM OR ROTOR NO.	CALIPER OR CYLINDER BORE SIZE	MERITOR CALIPER OR WHEEL CYLINDER (LEFT)	MERITOR CALIPER OR WHEEL CYLINDER (RIGHT)	MERITOR CALIPER OR WHEEL CYLINDER REPAIR KIT	MERITOR CALIPER PISTON	MERITOR MASTER CYLINDER	MERITOR MASTER CYLINDER KIT	MERITOR BRAKE HOSE (LEFT)	MERITOR BRAKE HOSE (RIGHT)
BLUEBIRD(Cont.)									
CSFE(Cont.)									
-	2.88"	R4255250	R4255250	R4066365	R4090096[72]	-	-	-	-
-	73mm	R4255850	R4255850	R4011758	R4011757[72]	-	-	-	-
-	66mm	R4255849	R4255849	R4011752	R4011751[72]	-	-	-	-
-	2.88"	R4255250	R4255250	R4066365	R4090096[72]	-	-	-	-
-	73mm	R4255850	R4255850	R4011758	R4011757[72]	-	-	-	-
-	66mm	R4255849	R4255849	R4011752	R4011751[72]	-	-	-	-
-	2.88"	R4255250	R4255250	R4066365	R4090096[72]	-	-	-	-
-	2.88"	R4255250	R4255250	R4066365	R4090096[72]	-	-	-	-
-	2.88"	R4255250	R4255250	R4066365	R4090096[72]	-	-	-	-
-	2.88"	R4255250	R4255250	R4066365	R4090096[72]	-	-	-	-
-	2.88"	R4255250	R4255250	R4066365	R4090096[72]	-	-	-	-
-	2.88"	R4255250	R4255250	R4066365	R4090096[72]	-	-	-	-
-	2.88"	R4255250	R4255250	R4066365	R4090096[72]	-	-	-	-
-	2.88"	R4255250	R4255250	R4066365	R4090096[72]	-	-	-	-
-	2.88"	R4255250	R4255250	R4066365	R4090096[72]	-	-	-	-
-	2.88"	R4255250	R4255250	R4066365	R4090096[72]	-	-	-	-
-	2.88"	R4255250	R4255250	R4066365	R4090096[72]	-	-	-	-
-	2.88"	R4255250	R4255250	R4066365	R4090096[72]	-	-	-	-
-	2.88"	R4255250	R4255250	R4066365	R4090096[72]	-	-	-	-
-	2.88"	R4255250	R4255250	R4066365	R4090096[72]	-	-	-	-
-	2.88"	R4255250	R4255250	R4066365	R4090096[72]	-	-	-	-
-	2.88"	R4255250	R4255250	R4066365	R4090096[72]	-	-	-	-
-	2.88"	R4255250	R4255250	R4066365	R4090096[72]	-	-	-	-
SCHOOL BUS									
23-123557-004	66mm	R424153263	R424153263[356]	R4011752	R4011751	-	-	-	-
23-123557-004	70mm	60450469002	60450468002	R4011730	60050334	-	-	-	-
23-123557-004	70mm	60450469002	60450468002	R4011730	60050334	-	-	-	-
23-123557-004	70mm	60450469002	60450468002	R4011730	60050334	-	-	-	-
23-123557-004	70mm	60450469002	60450468002	R4011730	60050334	-	-	-	-
23-123557-004	70mm	60450469002	60450468002	R4011730	60050334	-	-	-	-
23-123557-004	70mm	60450469002	60450468002	R4011730	60050334	-	-	-	-
23-123557-004	70mm	60450469002	60450468002	R4011730	60050334	-	-	-	-
23-123557-004	70mm	60450469002	60450468002	R4011730	60050334	-	-	-	-

MAKE MODEL YEAR AXLE CODE AXLE WEIGHT	AXLE & BRK. TYPE	BRK. MFG.	BRAKE SIZE	FMSI	MERITOR DISC PAD OR BRAKE SHOE	MERITOR GUIDE PIN OR RETURN SPRING KIT	MERITOR CALIPER HWD. KIT OR RETURN SPRING KIT	MERITOR ADJUSTER KIT (LEFT WHEEL)	MERITOR ADJUSTER KIT (RIGHT WHEEL)
BLUEBIRD(Cont.)									
SCHOOL BUS(Cont.)									
2004 RS-21 R-Spindle 21,000 lb.	Rd	Meritor		7636 - D769	MD769	NR	R4011729	NR	NR
2003 FD965 10,700 lb.	Fd	Meritor		7636 - D769	MD769	NR	R4011729	NR	NR
FF966 / F943 12,000 lb	Fd	Meritor		7636 - D769	MD769	NR	R4011729	NR	NR
RS-15 Wide Track 15,000 lb	Rd	Meritor		7636 - D769	MD769	NR	R4011729	NR	NR
RS-19 L-Spindle 19,000 lb	Rd	Meritor		7636 - D769	MD769	NR	R4011729	NR	NR
RS-21 R-Spindle 21,000 lb.	Rd	Meritor		7636 - D769	MD769	NR	R4011729	NR	NR
2002 FD965 10,700 lb.	Fd	Meritor		7636 - D769	MD769	NR	R4011729	NR	NR
FF966 / F943 12,000 lb	Fd	Meritor		7636 - D769	MD769	NR	R4011729	NR	NR
RS-15 Wide Track 15,000 lb	Rd	Meritor		7636 - D769	MD769	NR	R4011729	NR	NR
RS-19 L-Spindle 19,000 lb	Rd	Meritor		7636 - D769	MD769	NR	R4011729	NR	NR
RS-21 R-Spindle 21,000 lb.	Rd	Meritor		7636 - D769	MD769	NR	R4011729	NR	NR
TC2000									
2005 6000 lb	Fd	Bosch		7654 - D786	MD786A	R4011754	NR	NR	NR
FD965 10,700 lb.	Fd	Meritor		7636 - D769	MD769	NR	R4011729	NR	NR
FF966 / F943 12,000 lb	Fd	Meritor		7636 - D769	MD769	NR	R4011729	NR	NR
RS-15 Wide Track 15,000 lb	Rd	Meritor		7636 - D769	MD769	NR	R4011729	NR	NR
RS-19 L-Spindle 19,000 lb	Rd	Meritor		7636 - D769	MD769	NR	R4011729	NR	NR
RS-21 R-Spindle 21,000 lb.	Rd	Meritor		7636 - D769	MD769	NR	R4011729	NR	NR
2004 FD965 10,700 lb.	Fd	Meritor		7636 - D769	MD769	NR	R4011729	NR	NR
FF966 / F943 12,000 lb	Fd	Meritor		7636 - D769	MD769	NR	R4011729	NR	NR
RS-15 Wide Track 15,000 lb	Rd	Meritor		7636 - D769	MD769	NR	R4011729	NR	NR
RS-19 L-Spindle 19,000 lb	Rd	Meritor		7636 - D769	MD769	NR	R4011729	NR	NR
RS-21 R-Spindle 21,000 lb.	Rd	Meritor		7636 - D769	MD769	NR	R4011729	NR	NR
2003 FD965 10,700 lb.	Fd	Meritor		7636 - D769	MD769	NR	R4011729	NR	NR
FF966 / F943 12,000 lb	Fd	Meritor		7636 - D769	MD769	NR	R4011729	NR	NR
RS-15 Wide Track 15,000 lb	Rd	Meritor		7636 - D769	MD769	NR	R4011729	NR	NR
RS-19 L-Spindle 19,000 lb	Rd	Meritor		7636 - D769	MD769	NR	R4011729	NR	NR
RS-21 R-Spindle 21,000 lb.	Rd	Meritor		7636 - D769	MD769	NR	R4011729	NR	NR
2002 FD965 10,700 lb.	Fd	Meritor		7636 - D769	MD769	NR	R4011729	NR	NR

356 - Single Hydraulic System, Bosch Cylinder, after Serial No. Q20000, 18,500lb. Rear Axle

MERITOR DRUM OR ROTOR NO.	CALIPER OR CYLINDER BORE SIZE	MERITOR CALIPER OR WHEEL CYLINDER (LEFT)	MERITOR CALIPER OR WHEEL CYLINDER (RIGHT)	MERITOR CALIPER OR WHEEL CYLINDER REPAIR KIT	MERITOR CALIPER PISTON	MERITOR MASTER CYLINDER	MERITOR MASTER CYLINDER KIT	MERITOR BRAKE HOSE (LEFT)	MERITOR BRAKE HOSE (RIGHT)
									BLUEBIRD(Cont.)
									SCHOOL BUS(Cont.)
23-123557-004	70mm	60450469002	60450468002	R4011730	60050334	-	-	-	-
23-123557-004	70mm	60450469002	60450468002	R4011730	60050334	-	-	-	-
23-123557-004	70mm	60450469002	60450468002	R4011730	60050334	-	-	-	-
23-123557-004	70mm	60450469002	60450468002	R4011730	60050334	-	-	-	-
23-123557-004	70mm	60450469002	60450468002	R4011730	60050334	-	-	-	-
23-123557-004	70mm	60450469002	60450468002	R4011730	60050334	-	-	-	-
23-123557-004	70mm	60450469002	60450468002	R4011730	60050334	-	-	-	-
23-123557-004	70mm	60450469002	60450468002	R4011730	60050334	-	-	-	-
23-123557-004	70mm	60450469002	60450468002	R4011730	60050334	-	-	-	-
23-123557-004	70mm	60450469002	60450468002	R4011730	60050334	-	-	-	-
23-123557-004	70mm	60450469002	60450468002	R4011730	60050334	-	-	-	-
									TC2000
23-123557-004	66mm	R424153263	R424153263[356]	R4011752	R4011751	-	-	-	-
23-123557-004	70mm	60450469002	60450468002	R4011730	60050334	-	-	-	-
23-123557-004	70mm	60450469002	60450468002	R4011730	60050334	-	-	-	-
23-123557-004	70mm	60450469002	60450468002	R4011730	60050334	-	-	-	-
23-123557-004	70mm	60450469002	60450468002	R4011730	60050334	-	-	-	-
23-123557-004	70mm	60450469002	60450468002	R4011730	60050334	-	-	-	-
23-123557-004	70mm	60450469002	60450468002	R4011730	60050334	-	-	-	-
23-123557-004	70mm	60450469002	60450468002	R4011730	60050334	-	-	-	-
23-123557-004	70mm	60450469002	60450468002	R4011730	60050334	-	-	-	-
23-123557-004	70mm	60450469002	60450468002	R4011730	60050334	-	-	-	-
23-123557-004	70mm	60450469002	60450468002	R4011730	60050334	-	-	-	-
23-123557-004	70mm	60450469002	60450468002	R4011730	60050334	-	-	-	-
23-123557-004	70mm	60450469002	60450468002	R4011730	60050334	-	-	-	-
23-123557-004	70mm	60450469002	60450468002	R4011730	60050334	-	-	-	-
23-123557-004	70mm	60450469002	60450468002	R4011730	60050334	-	-	-	-

MAKE MODEL YEAR AXLE CODE AXLE WEIGHT	AXLE & BRK. TYPE	BRK. MFG.	BRAKE SIZE	FMSI	MERITOR DISC PAD OR BRAKE SHOE	MERITOR GUIDE PIN OR RETURN SPRING KIT	MERITOR CALIPER HWD. KIT OR RETURN SPRING KIT	MERITOR ADJUSTER KIT (LEFT WHEEL)	MERITOR ADJUSTER KIT (RIGHT WHEEL)
BLUEBIRD(Cont.)									
TC2000(Cont.)									
2002 FF966 / F943 12,000 lb	Fd	Meritor		7636 - D769	MD769	NR	R4011729	NR	NR
RS-15 Wide Track 15,000 lb	Rd	Meritor		7636 - D769	MD769	NR	R4011729	NR	NR
RS-19 L-Spindle 19,000 lb	Rd	Meritor		7636 - D769	MD769	NR	R4011729	NR	NR
RS-21 R-Spindle 21,000 lb.	Rd	Meritor		7636 - D769	MD769	NR	R4011729	NR	NR
TCFE									
2004 Type D Transit Series	Fd	Meritor		7636 - D769	MD769	N/A	R4011729	-	-
	Fd	Meritor		7636 - D769	MD769	N/A	R4011729	-	-
	Fd	Meritor		7636 - D1032	MD769	N/A	R4011729	-	-
	Fd	Meritor		7636 - D1032	MD769	N/A	R4011729	-	-
	Rd	Meritor		7636 - D1032	MD769	N/A	R4011729	-	-
	Rd	Meritor		7636 - D769	MD769	N/A	R4011729	-	-
	Rd	Meritor		7636 - D1032	MD769	N/A	R4011729	-	-
	Rd	Meritor		7636 - D769	MD769	N/A	R4011729	-	-
2003	Fd	Meritor		7636 - D1032	MD769	N/A	R4011729	-	-
	Fd	Meritor		7636 - D1032	MD769	N/A	R4011729	-	-
	Fd	Meritor		7636 - D769	MD769	N/A	R4011729	-	-
	Fd	Meritor		7636 - D769	MD769	N/A	R4011729	-	-
	Rd	Meritor		7636 - D1032	MD769	N/A	R4011729	-	-
	Rd	Meritor		7636 - D769	MD769	N/A	R4011729	-	-
	Rd	Meritor		7636 - D769	MD769	N/A	R4011729	-	-
	Rd	Meritor		7636 - D1032	MD769	N/A	R4011729	-	-
2002	Fd	Bendix		7142 - D225	MD225	N/A	R40H5522	-	-
	Fd	Bosch		7655 - D786	MD786	R4011754	N/A	-	-
	Fd	Bosch		7654 - D786	MD786A	R4011754	N/A	-	-
	Fd	Meritor		7636 - D769	MD769	N/A	R4011121	-	-
	Fd	Meritor		7636 - D1032	MD769	N/A	R4011121	-	-
	Rd	Bendix		7142 - D225	MD225	N/A	R40H5522	-	-
	Rd	Bosch		7654 - D786	MD786A	R4011754	N/A	-	-
	Rd	Bosch		7655 - D786	MD786	R4011754	N/A	-	-
	Rd	Meritor		7636 - D769	MD769	N/A	R4011121	-	-
	Rd	Meritor		7636 - D1032	MD769	N/A	R4011121	-	-
2001	Fd	Bendix		7142 - D225	MD225	N/A	R40H5522	-	-
	Fd	Bosch		7655 - D786	MD786	R4011754	N/A	-	-
	Fd	Bosch		7654 - D786	MD786A	R4011754	N/A	-	-
	Rd	Bendix		7142 - D225	MD225	N/A	R40H5522	-	-
	Rd	Bosch		7654 - D786	MD786A	R4011754	N/A	-	-
	Rd	Bosch		7655 - D786	MD786	R4011754	N/A	-	-
2000	Fd	Bendix		7142 - D225	MD225	N/A	R40H5522	-	-
	Fd	Bosch		7655 - D786	MD786	R4011754	N/A	-	-
	Fd	Bosch		7654 - D786	MD786A	R4011754	N/A	-	-
	Rd	Bendix		7142 - D225	MD225	N/A	R40H5522	-	-
	Rd	Bosch		7655 - D786	MD786	R4011754	N/A	-	-
	Rd	Bosch		7654 - D786	MD786A	R4011754	N/A	-	-
1999	Fd	Bendix		7142 - D225	MD225	N/A	R40H5522	-	-
	Rd	Bendix		7142 - D225	MD225	N/A	R40H5522	-	-
1998	Fd	Bendix		7142 - D225	MD225	N/A	R40H5522	-	-
	Rd	Bendix		7142 - D225	MD225	N/A	R40H5522	-	-
1997	Fd	Bendix		7142 - D225	MD225	N/A	R40H5522	-	-
	Rd	Bendix		7142 - D225	MD225	N/A	R40H5522	-	-

72 - Phenolic/Steel Face

201 - Steel Piston

MERITOR DRUM OR ROTOR NO.	CALIPER OR CYLINDER BORE SIZE	MERITOR CALIPER OR WHEEL CYLINDER (LEFT)	MERITOR CALIPER OR WHEEL CYLINDER (RIGHT)	MERITOR CALIPER OR WHEEL CYLINDER REPAIR KIT	MERITOR CALIPER PISTON	MERITOR MASTER CYLINDER	MERITOR MASTER CYLINDER KIT	MERITOR BRAKE HOSE (LEFT)	MERITOR BRAKE HOSE (RIGHT)
BLUEBIRD(Cont.)									
TC2000(Cont.)									
23-123557-004	70mm	60450469002	60450468002	R4011730	60050334	-	-	-	-
23-123557-004	70mm	60450469002	60450468002	R4011730	60050334	-	-	-	-
23-123557-004	70mm	60450469002	60450468002	R4011730	60050334	-	-	-	-
23-123557-004	70mm	60450469002	60450468002	R4011730	60050334	-	-	-	-
TCFE									
-	70mm	60450469002	60450468002	R4011731	R4011511[72]	-	-	-	-
-	64mm	60450474001	60450473001	R4011731	R4011511[72]	-	-	-	-
-	70mm	60450469002	60450468002	R4011731	R4011511[72]	-	-	-	-
-	64mm	60450474001	60450473001	R4011731	R4011511[72]	-	-	-	-
-	70mm	60450469002	60450468002	R4011731	R4011511[72]	-	-	-	-
-	70mm	60450469002	60450468002	R4011731	R4011511[72]	-	-	-	-
-	64mm	60450474001	60450473001	R4011731	R4011511[72]	-	-	-	-
-	64mm	60450474001	60450473001	R4011731	R4011511[72]	-	-	-	-
-	70mm	60450469002	60450468002	R4011731	R4011511[72]	-	-	-	-
-	64mm	60450474001	60450473001	R4011731	R4011511[72]	-	-	-	-
-	64mm	60450474001	60450473001	R4011731	R4011511[72]	-	-	-	-
-	70mm	60450469002	60450468002	R4011731	R4011511[72]	-	-	-	-
-	64mm	60450474001	60450473001	R4011731	R4011511[72]	-	-	-	-
-	70mm	60450469002	60450468002	R4011731	R4011511[72]	-	-	-	-
-	64mm	60450474001	60450473001	R4011731	R4011511[72]	-	-	-	-
-	70mm	60450469002	60450468002	R4011731	R4011511[72]	-	-	-	-
-	2.88"	R4255250	R4255250	R4066365	R4090096[72]	-	-	-	-
-	73mm	R4255850	R4255850	R4011758	R4011757[72]	-	-	-	-
-	66mm	R4255849	R4255849	R4011752	R4011751[72]	-	-	-	-
-	70mm	60050313	60050312	-	-	-	-	-	-
-	70mm	60450469002	60450468002	R4011731	R4011511[201]	-	-	-	-
-	2.88"	R4255250	R4255250	R4066365	R4090096[72]	-	-	-	-
-	66mm	R4255849	R4255849	R4011752	R4011751[72]	-	-	-	-
-	73mm	R4255850	R4255850	R4011758	R4011757[72]	-	-	-	-
-	70mm	60450469002	60450468002	R4011731	R4011511[201]	-	-	-	-
-	70mm	60450469002	60450468002	R4011731	R4011511[201]	-	-	-	-
-	2.88"	R4255250	R4255250	R4066365	R4090096[72]	-	-	-	-
-	73mm	R4255850	R4255850	R4011758	R4011757[72]	-	-	-	-
-	66mm	R4255849	R4255849	R4011752	R4011751[72]	-	-	-	-
-	2.88"	R4255250	R4255250	R4066365	R4090096[72]	-	-	-	-
-	66mm	R4255849	R4255849	R4011752	R4011751[72]	-	-	-	-
-	73mm	R4255850	R4255850	R4011758	R4011757[72]	-	-	-	-
-	2.88"	R4255250	R4255250	R4066365	R4090096[72]	-	-	-	-
-	73mm	R4255850	R4255850	R4011758	R4011757[72]	-	-	-	-
-	66mm	R4255849	R4255849	R4011752	R4011751[72]	-	-	-	-
-	2.88"	R4255250	R4255250	R4066365	R4090096[72]	-	-	-	-
-	73mm	R4255850	R4255850	R4011758	R4011757[72]	-	-	-	-
-	66mm	R4255849	R4255849	R4011752	R4011751[72]	-	-	-	-
-	2.88"	R4255250	R4255250	R4066365	R4090096[72]	-	-	-	-
-	2.88"	R4255250	R4255250	R4066365	R4090096[72]	-	-	-	-
-	2.88"	R4255250	R4255250	R4066365	R4090096[72]	-	-	-	-
-	2.88"	R4255250	R4255250	R4066365	R4090096[72]	-	-	-	-
-	2.88"	R4255250	R4255250	R4066365	R4090096[72]	-	-	-	-
-	2.88"	R4255250	R4255250	R4066365	R4090096[72]	-	-	-	-

MAKE MODEL YEAR AXLE CODE AXLE WEIGHT	AXLE & BRK. TYPE	BRK. MFG.	BRAKE SIZE	FMSI	MERITOR DISC PAD OR BRAKE SHOE	MERITOR GUIDE PIN OR RETURN SPRING KIT	MERITOR CALIPER HWD. KIT OR RETURN SPRING KIT	MERITOR ADJUSTER KIT (LEFT WHEEL)	MERITOR ADJUSTER KIT (RIGHT WHEEL)
BLUEBIRD(Cont.)									
TCFE(Cont.)									
1996									
	Fd	Bendix		7142 - D225	MD225	N/A	R40H5522	-	-
	Rd	Bendix		7142 - D225	MD225	N/A	R40H5522	-	-
1995									
	Fd	Bendix		7142 - D225	MD225	N/A	R40H5522	-	-
	Rd	Bendix		7142 - D225	MD225	N/A	R40H5522	-	-
1994									
	Fd	Bendix		7142 - D225	MD225	N/A	R40H5522	-	-
	Rd	Bendix		7142 - D225	MD225	N/A	R40H5522	-	-
1993									
	Fd	Bendix		7142 - D225	MD225	N/A	R40H5522	-	-
	Rd	Bendix		7142 - D225	MD225	N/A	R40H5522	-	-
1992									
	Fd	Bendix		7142 - D225	MD225	N/A	R40H5522	-	-
	Rd	Bendix		7142 - D225	MD225	N/A	R40H5522	-	-
1991									
	Fd	Bendix		7142 - D225	MD225	N/A	R40H5522	-	-
	Rd	Bendix		7142 - D225	MD225	N/A	R40H5522	-	-
1990									
	Fd	Bendix		7142 - D225	MD225	N/A	R40H5522	-	-
	Rd	Bendix		7142 - D225	MD225	N/A	R40H5522	-	-
1989									
	Fd	Bendix		7142 - D225	MD225	N/A	R40H5522	-	-
	Rd	Bendix		7142 - D225	MD225	N/A	R40H5522	-	-
DODGE									
1000 SERIES									
1973									
E17	Ra	WG	15 " x 6 "	4596 - 381	R700381	R40H597	R40H9200	R40H3540	R40H3541[80]
	Ra	WG	15 " x 6 "	4596 - 381	R700381	R40H597	R40H9200	R40H3540	R40H3541[80]
	Ra	WG	15 " x 7 "	4597 - 383	R700383	R40H597	R40H9200	R40H3540	R40H3541[80]
	Ra	WG	15 " x 7 "	4597 - 383	R700383	R40H597	R40H9200	R40H3540	R40H3541[80]
5000, 7000, 9000 lb.	Fa	WG	15 " x 3 "	1245C - 321	R700321	R40H521	R40H9237	R40H3502	R40H3503
	Fa	WG	15 " x 3 "	1245C - 321	R700321	R40H521	R40H9237	R40H3502	R40H3503
12,000 lb.	Fa	WG	15 " x 3-1/2 "	1280B - 322	R464004	R40H521	R40H9237	R40H3502	R40H3503
1972									
E17	Ra	WG	15 " x 6 "	4596 - 381	R700381	R40H597	R40H9200	R40H3540	R40H3541[80]
	Ra	WG	15 " x 6 "	4596 - 381	R700381	R40H597	R40H9200	R40H3540	R40H3541[80]
	Ra	WG	15 " x 7 "	4597 - 383	R700383	R40H597	R40H9200	R40H3540	R40H3541[80]
	Ra	WG	15 " x 7 "	4597 - 383	R700383	R40H597	R40H9200	R40H3540	R40H3541[80]
5000, 7000, 9000 lb.	Fa	WG	15 " x 3 "	1245C - 321	R700321	R40H521	R40H9237	R40H3502	R40H3503
	Fa	WG	15 " x 3 "	1245C - 321	R700321	R40H521	R40H9237	R40H3502	R40H3503
12,000 lb.	Fa	WG	15 " x 3-1/2 "	1280B - 322	R464004	R40H521	R40H9237	R40H3502	R40H3503
1971									
E17	Ra	WG	15 " x 6 "	4596 - 381	R700381	R40H597	R40H9200	R40H3540	R40H3541[80]
	Ra	WG	15 " x 6 "	4596 - 381	R700381	R40H597	R40H9200	R40H3540	R40H3541[80]
	Ra	WG	15 " x 7 "	4597 - 383	R700383	R40H597	R40H9200	R40H3540	R40H3541[80]
	Ra	WG	15 " x 7 "	4597 - 383	R700383	R40H597	R40H9200	R40H3540	R40H3541[80]
5000, 7000, 9000 lb.	Fa	WG	15 " x 3 "	1245C - 321	R700321	R40H521	R40H9237	R40H3502	R40H3503
	Fa	WG	15 " x 3 "	1245C - 321	R700321	R40H521	R40H9237	R40H3502	R40H3503
12,000 lb.	Fa	WG	15 " x 3-1/2 "	1280B - 322	R464004	R40H521	R40H9237	R40H3502	R40H3503
1970									
E17	Ra	WG	15 " x 6 "	4596 - 381	R700381	R40H597	R40H9200	R40H3540	R40H3541[80]
	Ra	WG	15 " x 6 "	4596 - 381	R700381	R40H597	R40H9200	R40H3540	R40H3541[80]
	Ra	WG	15 " x 7 "	4597 - 383	R700383	R40H597	R40H9200	R40H3540	R40H3541[80]
	Ra	WG	15 " x 7 "	4597 - 383	R700383	R40H597	R40H9200	R40H3540	R40H3541[80]
5000, 7000, 9000 lb.	Fa	WG	15 " x 3 "	1245C - 321	R700321	R40H521	R40H9237	R40H3502	R40H3503
	Fa	WG	15 " x 3 "	1245C - 321	R700321	R40H521	R40H9237	R40H3502	R40H3503
12,000 lb.	Fa	WG	15 " x 3-1/2 "	1280B - 322	R464004	R40H521	R40H9237	R40H3502	R40H3503
1969									
E17	Ra	WG	15 " x 6 "	4596 - 381	R700381	R40H597	R40H9200	R40H3540	R40H3541[80]
	Ra	WG	15 " x 6 "	4596 - 381	R700381	R40H597	R40H9200	R40H3540	R40H3541[80]
	Ra	WG	15 " x 7 "	4597 - 383	R700383	R40H597	R40H9200	R40H3540	R40H3541[80]
	Ra	WG	15 " x 7 "	4597 - 383	R700383	R40H597	R40H9200	R40H3540	R40H3541[80]

72 - Phenolic/Steel Face

80 - 1.67 Ratio

MERITOR DRUM OR ROTOR NO.	CALIPER OR CYLINDER BORE SIZE	MERITOR CALIPER OR WHEEL CYLINDER (LEFT)	MERITOR CALIPER OR WHEEL CYLINDER (RIGHT)	MERITOR CALIPER OR WHEEL CYLINDER REPAIR KIT	MERITOR CALIPER PISTON	MERITOR MASTER CYLINDER	MERITOR MASTER CYLINDER KIT	MERITOR BRAKE HOSE (LEFT)	MERITOR BRAKE HOSE (RIGHT)
BLUEBIRD(Cont.)									
TCFE(Cont.)									
-	2.88"	R4255250	R4255250	R4066365	R4090096[72]	-	-	-	-
-	2.88"	R4255250	R4255250	R4066365	R4090096[72]	-	-	-	-
-	2.88"	R4255250	R4255250	R4066365	R4090096[72]	-	-	-	-
-	2.88"	R4255250	R4255250	R4066365	R4090096[72]	-	-	-	-
-	2.88"	R4255250	R4255250	R4066365	R4090096[72]	-	-	-	-
-	2.88"	R4255250	R4255250	R4066365	R4090096[72]	-	-	-	-
-	2.88"	R4255250	R4255250	R4066365	R4090096[72]	-	-	-	-
-	2.88"	R4255250	R4255250	R4066365	R4090096[72]	-	-	-	-
-	2.88"	R4255250	R4255250	R4066365	R4090096[72]	-	-	-	-
-	2.88"	R4255250	R4255250	R4066365	R4090096[72]	-	-	-	-
-	2.88"	R4255250	R4255250	R4066365	R4090096[72]	-	-	-	-
-	2.88"	R4255250	R4255250	R4066365	R4090096[72]	-	-	-	-
DODGE									
1000 SERIES									
-	1-5/8 "	R4133338	R4133338	R4166689	NR	-	-	-	-
-	1-5/8 "	R4133338	R4133338	R4166689	NR	-	-	-	-
-	1-5/8 "	R4133338	R4133338	R4166689	NR	-	-	-	-
-	1-5/8 "	R4133338	R4133338	R4166689	NR	-	-	-	-
-	1-1/4 "	R4133582	R4133581	R4166923	NR	-	-	-	-
-	1-1/8 "	R4133714	R4133715	R4166926	NR	-	-	-	-
-	1-1/4 "	R4133582	R4133581	R4166923	NR	-	-	-	-
-	1-5/8 "	R4133338	R4133338	R4166689	NR	-	-	-	-
-	1-5/8 "	R4133338	R4133338	R4166689	NR	-	-	-	-
-	1-5/8 "	R4133338	R4133338	R4166689	NR	-	-	-	-
-	1-5/8 "	R4133338	R4133338	R4166689	NR	-	-	-	-
-	1-1/8 "	R4133714	R4133715	R4166926	NR	-	-	-	-
-	1-1/4 "	R4133582	R4133581	R4166923	NR	-	-	-	-
-	1-1/4 "	R4133582	R4133581	R4166923	NR	-	-	-	-
-	1-5/8 "	R4133338	R4133338	R4166689	NR	-	-	-	-
-	1-5/8 "	R4133338	R4133338	R4166689	NR	-	-	-	-
-	1-5/8 "	R4133338	R4133338	R4166689	NR	-	-	-	-
-	1-5/8 "	R4133338	R4133338	R4166689	NR	-	-	-	-
-	1-1/4 "	R4133582	R4133581	R4166923	NR	-	-	-	-
-	1-1/8 "	R4133714	R4133715	R4166926	NR	-	-	-	-
-	1-1/4 "	R4133582	R4133581	R4166923	NR	-	-	-	-
-	1-1/4 "	R4133582	R4133581	R4166923	NR	-	-	-	-
-	1-5/8 "	R4133338	R4133338	R4166689	NR	-	-	-	-
-	1-5/8 "	R4133338	R4133338	R4166689	NR	-	-	-	-
-	1-5/8 "	R4133338	R4133338	R4166689	NR	-	-	-	-
-	1-5/8 "	R4133338	R4133338	R4166689	NR	-	-	-	-
-	1-1/8 "	R4133714	R4133715	R4166926	NR	-	-	-	-
-	1-1/4 "	R4133582	R4133581	R4166923	NR	-	-	-	-
-	1-1/4 "	R4133582	R4133581	R4166923	NR	-	-	-	-
-	1-5/8 "	R4133338	R4133338	R4166689	NR	-	-	-	-
-	1-5/8 "	R4133338	R4133338	R4166689	NR	-	-	-	-
-	1-5/8 "	R4133338	R4133338	R4166689	NR	-	-	-	-
-	1-5/8 "	R4133338	R4133338	R4166689	NR	-	-	-	-

MAKE MODEL YEAR AXLE CODE AXLE WEIGHT	AXLE & BRK. TYPE	BRK. MFG.	BRAKE SIZE	FMSI	MERITOR DISC PAD OR BRAKE SHOE	MERITOR GUIDE PIN OR RETURN SPRING KIT	MERITOR CALIPER HWD. KIT OR RETURN SPRING KIT	MERITOR ADJUSTER KIT (LEFT WHEEL)	MERITOR ADJUSTER KIT (RIGHT WHEEL)
DODGE(Cont.)									
1000 SERIES(Cont.)									
1969 5000, 7000, 9000 lb.	Fa Fa	WG WG	15 " x 3 " 15 " x 3 "	1245C - 321 1245C - 321	R700321 R700321	R40H521 R40H521	R40H9237 R40H9237	R40H3502 R40H3502	R40H3503 R40H3503
12,000 lb.	Fa	WG	15 " x 3-1/2 "	1280B - 322	R464004	R40H521	R40H9237	R40H3502	R40H3503
400 SERIES									
1981	Fd	BX		7081 - D149	MD149	R40H5010	R40H5529	NR	NR
	Ra	BX	12 " x 3 "	2140AT - 358	R46358	R40H547	R40H4087	R40H2598	R40H2599
1973 RF147, E13, RA115	Ra	BX	15 " x 4 "	2032 - 402	Discontinued	R40H510	R40H9223	NLA	NLA[81]
	Rm	BX	15 " x 4 "	2032 - 402	Discontinued	R40H500	R40H9224	R404177	R404176
4000, 5000 lb.	Fa	KH	14 " x 2-1/2 "	2060 - 361	Discontinued	R40H596	R40H9219	R40H3536	R40H3537
1972 RF147, E13, RA115	Ra	BX	15 " x 4 "	2032 - 402	Discontinued	R40H510	R40H9223	NLA	NLA[81]
	Rm	BX	15 " x 4 "	2032 - 402	Discontinued	R40H500	R40H9224	R404177	R404176
4000, 5000 lb.	Fa	KH	14 " x 2-1/2 "	2060 - 361	Discontinued	R40H596	R40H9219	R40H3536	R40H3537
1971 RF147, E13, RA115	Ra	BX	15 " x 4 "	2032 - 402	Discontinued	R40H510	R40H9223	NLA	NLA[81]
	Rm	BX	15 " x 4 "	2032 - 402	Discontinued	R40H500	R40H9224	R404177	R404176
4000, 5000 lb.	Fa	KH	14 " x 2-1/2 "	2060 - 361	Discontinued	R40H596	R40H9219	R40H3536	R40H3537
1970 RF147, E13, RA115	Ra	BX	15 " x 4 "	2032 - 402	Discontinued	R40H510	R40H9223	NLA	NLA[81]
	Rm	BX	15 " x 4 "	2032 - 402	Discontinued	R40H500	R40H9224	R404177	R404176
4000, 5000 lb.	Fa	KH	14 " x 2-1/2 "	2060 - 361	Discontinued	R40H596	R40H9219	R40H3536	R40H3537
1969 RF147, E13, RA115	Ra	BX	15 " x 4 "	2032 - 402	Discontinued	R40H510	R40H9223	NLA	NLA[81]
	Rm	BX	15 " x 4 "	2032 - 402	Discontinued	R40H500	R40H9224	R404177	R404176
4000, 5000 lb.	Fa	KH	14 " x 2-1/2 "	2060 - 361	Discontinued	R40H596	R40H9219	R40H3536	R40H3537
500 SERIES									
1977 E16	Ra	WG	15 " x 6 "	4596 - 381	R700381	R40H597	R40H9200	R40H3540	R40H3541[80]
RF1400	Ra	BX	15 " x 4 "	2032 - 402	Discontinued	R40H510	R40H9223	NLA	NLA[81]
	Rm	BX	15 " x 4 "	2032 - 402	Discontinued	R40H500	R40H9224	R404177	R404176
RF147, E13, RA115	Ra	BX	15 " x 4 "	2032 - 402	Discontinued	R40H510	R40H9223	NLA	NLA[81]
	Rm	BX	15 " x 4 "	2032 - 402	Discontinued	R40H500	R40H9224	R404177	R404176
4000, 5000 lb.	Fa	BX	14 " x 2-1/2 "	2060 - 398	N/A	R40H140	R40H9204	-	-
5,000, 5,500, 7,000 lb.	Fa	WG	15 " x 3 "	1245C - 321	R700321	R40H521	R40H9237	R40H3502	R40H3503
1976 E16	Ra	WG	15 " x 6 "	4596 - 381	R700381	R40H597	R40H9200	R40H3540	R40H3541[80]
RF1400	Ra	BX	15 " x 4 "	2032 - 402	Discontinued	R40H510	R40H9223	NLA	NLA[81]
	Rm	BX	15 " x 4 "	2032 - 402	Discontinued	R40H500	R40H9224	R404177	R404176
RF147, E13, RA115	Ra	BX	15 " x 4 "	2032 - 402	Discontinued	R40H510	R40H9223	NLA	NLA[81]
	Rm	BX	15 " x 4 "	2032 - 402	Discontinued	R40H500	R40H9224	R404177	R404176
4000, 5000 lb.	Fa	BX	14 " x 2-1/2 "	2060 - 398	N/A	R40H140	R40H9204	-	-
5,000, 5,500, 7,000 lb.	Fa	WG	15 " x 3 "	1245C - 321	R700321	R40H521	R40H9237	R40H3502	R40H3503
1975 E16	Ra	WG	15 " x 6 "	4596 - 381	R700381	R40H597	R40H9200	R40H3540	R40H3541[80]
RF1400	Ra	BX	15 " x 4 "	2032 - 402	Discontinued	R40H510	R40H9223	NLA	NLA[81]
	Rm	BX	15 " x 4 "	2032 - 402	Discontinued	R40H500	R40H9224	R404177	R404176
RF147, E13, RA115	Ra	BX	15 " x 4 "	2032 - 402	Discontinued	R40H510	R40H9223	NLA	NLA[81]
	Rm	BX	15 " x 4 "	2032 - 402	Discontinued	R40H500	R40H9224	R404177	R404176
4000, 5000 lb.	Fa	BX	14 " x 2-1/2 "	2060 - 398	N/A	R40H140	R40H9204	-	-
5,000, 5,500, 7,000 lb.	Fa	WG	15 " x 3 "	1245C - 321	R700321	R40H521	R40H9237	R40H3502	R40H3503
1974 E16	Ra	WG	15 " x 6 "	4596 - 381	R700381	R40H597	R40H9200	R40H3540	R40H3541[80]
RF1400	Ra	BX	15 " x 4 "	2032 - 402	Discontinued	R40H510	R40H9223	NLA	NLA[81]
	Rm	BX	15 " x 4 "	2032 - 402	Discontinued	R40H500	R40H9224	R404177	R404176
RF147, E13, RA115	Ra	BX	15 " x 4 "	2032 - 402	Discontinued	R40H510	R40H9223	NLA	NLA[81]
	Rm	BX	15 " x 4 "	2032 - 402	Discontinued	R40H500	R40H9224	R404177	R404176
4000, 5000 lb.	Fa	BX	14 " x 2-1/2 "	2060 - 398	N/A	R40H140	R40H9204	-	-
5,000, 5,500, 7,000 lb.	Fa	WG	15 " x 3 "	1245C - 321	R700321	R40H521	R40H9237	R40H3502	R40H3503
1973 E16	Ra	WG	15 " x 6 "	4596 - 381	R700381	R40H597	R40H9200	R40H3540	R40H3541[80]

53 - Power Brakes
119 - Power Brakes, School Bus

80 - 1.67 Ratio
346 - 4500 lb. Casting Number 2238451452, 10mm Inlet

81 - Adjusting Screw is No Longer Available
405 - Rotor Only

MERITOR DRUM OR ROTOR NO.	CALIPER OR CYLINDER BORE SIZE	MERITOR CALIPER OR WHEEL CYLINDER (LEFT)	MERITOR CALIPER OR WHEEL CYLINDER (RIGHT)	MERITOR CALIPER OR WHEEL CYLINDER REPAIR KIT	MERITOR CALIPER PISTON	MERITOR MASTER CYLINDER	MERITOR MASTER CYLINDER KIT	MERITOR BRAKE HOSE (LEFT)	MERITOR BRAKE HOSE (RIGHT)
									DODGE(Cont.)
									1000 SERIES(Cont.)
-	1-1/4 "	R4133582	R4133581	R4166923	NR	-	-	-	-
-	1-1/8 "	R4133714	R4133715	R4166926	NR	-	-	-	-
-	1-1/4 "	R4133582	R4133581	R4166923	NR	-	-	-	-
									400 SERIES
R44141089[405]	3-3/8 "	R42R55200	R42R55199[346]	R4066780	R4090021	R4111583[119]	R4122598	R4577173	R4577172
N/A	1-1/16 "	R4133791	R 418145	R4166821	NR	-	-	-	-
-	1-1/2 "	R4133390	R4133390	R4166818	NR	-	-	-	-
-	1-1/2 "	R4133390	R4133390	R4166818	NR	-	-	-	-
-	1.09375	R4133484	R4133485	R4166819	NR	-	-	-	-
-	1-1/2 "	R4133390	R4133390	R4166818	NR	-	-	-	-
-	1-1/2 "	R4133390	R4133390	R4166818	NR	-	-	-	-
-	1.09375	R4133484	R4133485	R4166819	NR	-	-	-	-
-	1-1/2 "	R4133390	R4133390	R4166818	NR	-	-	-	-
-	1-1/2 "	R4133390	R4133390	R4166818	NR	-	-	-	-
-	1.09375	R4133484	R4133485	R4166819	NR	-	-	-	-
-	1-1/2 "	R4133390	R4133390	R4166818	NR	-	-	-	-
-	1-1/2 "	R4133390	R4133390	R4166818	NR	-	-	-	-
-	1.09375	R4133484	R4133485	R4166819	NR	-	-	-	-
-	1-1/2 "	R4133390	R4133390	R4166818	NR	-	-	-	-
-	1-1/2 "	R4133390	R4133390	R4166818	NR	-	-	-	-
-	1.09375	R4133484	R4133485	R4166819	NR	-	-	-	-
									500 SERIES
-	1-5/8 "	R4133338	R4133338	R4166689	NR	-	-	-	-
-	1-1/2 "	R4133390	R4133390	R4166818	NR	-	-	-	-
-	1-1/2 "	R4133390	R4133390	R4166818	NR	-	-	-	-
-	1-1/2 "	R4133390	R4133390	R4166818	NR	-	-	-	-
-	1-1/2 "	R4133390	R4133390	R4166818	NR	-	-	-	-
-	1-1/16 "	R4133540	R4133541	R4166821	NR	R4111583[53]	R4122598	-	-
-	1-1/8 "	R4133714	R4133715	R4166926	NR	R4111583[53]	R4122598	-	-
-	1-5/8 "	R4133338	R4133338	R4166689	NR	-	-	-	-
-	1-1/2 "	R4133390	R4133390	R4166818	NR	-	-	-	-
-	1-1/2 "	R4133390	R4133390	R4166818	NR	-	-	-	-
-	1-1/2 "	R4133390	R4133390	R4166818	NR	-	-	-	-
-	1-1/2 "	R4133390	R4133390	R4166818	NR	-	-	-	-
-	1-1/16 "	R4133540	R4133541	R4166821	NR	R4111583[53]	R4122598	-	-
-	1-1/8 "	R4133714	R4133715	R4166926	NR	R4111583[53]	R4122598	-	-
-	1-5/8 "	R4133338	R4133338	R4166689	NR	-	-	-	-
-	1-1/2 "	R4133390	R4133390	R4166818	NR	-	-	-	-
-	1-1/2 "	R4133390	R4133390	R4166818	NR	-	-	-	-
-	1-1/2 "	R4133390	R4133390	R4166818	NR	-	-	-	-
-	1-1/2 "	R4133390	R4133390	R4166818	NR	-	-	-	-
-	1-1/16 "	R4133540	R4133541	R4166821	NR	-	-	-	-
-	1-1/8 "	R4133714	R4133715	R4166926	NR	-	-	-	-
-	1-5/8 "	R4133338	R4133338	R4166689	NR	-	-	-	-
-	1-1/2 "	R4133390	R4133390	R4166818	NR	-	-	-	-
-	1-1/2 "	R4133390	R4133390	R4166818	NR	-	-	-	-
-	1-1/2 "	R4133390	R4133390	R4166818	NR	-	-	-	-
-	1-1/2 "	R4133390	R4133390	R4166818	NR	-	-	-	-
-	1-1/16 "	R4133540	R4133541	R4166821	NR	-	-	-	-
-	1-1/8 "	R4133714	R4133715	R4166926	NR	-	-	-	-
-	1-5/8 "	R4133338	R4133338	R4166689	NR	-	-	-	-

MAKE MODEL YEAR AXLE CODE AXLE WEIGHT	AXLE & BRK. TYPE	BRK. MFG.	BRAKE SIZE	FMSI	MERITOR DISC PAD OR BRAKE SHOE	MERITOR GUIDE PIN OR RETURN SPRING KIT	MERITOR CALIPER HWD. KIT OR RETURN SPRING KIT	MERITOR ADJUSTER KIT (LEFT WHEEL)	MERITOR ADJUSTER KIT (RIGHT WHEEL)
DODGE(Cont.)									
500 SERIES(Cont.)									
1973									
RF147, E13, RA115	Ra	BX	15 " x 4 "	2032 - 402	Discontinued	R40H510	R40H9223	NLA	NLA[81]
	Rm	BX	15 " x 4 "	2032 - 402	Discontinued	R40H500	R40H9224	R404177	R404176
RF147, RH, E13, E16	Ra	WG	15 " x 5 "	1252 - 379	Discontinued	R40H597	R40H9200	R40H3540	R40H3541[80]
4000, 5000 lb.	Fa	BX	14 " x 2-1/2 "	2060 - 398	N/A	R40H140	R40H9204	-	-
5,000, 5,500, 7,000 lb.	Fa	WG	15 " x 3 "	1245C - 321	R700321	R40H521	R40H9237	R40H3502	R40H3503
1972									
E16	Ra	WG	15 " x 6 "	4596 - 381	R700381	R40H597	R40H9200	R40H3540	R40H3541[80]
1971									
	Ra	WG	15 " x 6 "	4596 - 381	R700381	R40H597	R40H9200	R40H3540	R40H3541[80]
1970									
	Ra	WG	15 " x 6 "	4596 - 381	R700381	R40H597	R40H9200	R40H3540	R40H3541[80]
1969									
	Ra	WG	15 " x 6 "	4596 - 381	R700381	R40H597	R40H9200	R40H3540	R40H3541[80]
600 SERIES									
1977									
E17	Ra	WG	15 " x 6 "	4596 - 381	R700381	R40H597	R40H9200	R40H3540	R40H3541[80]
	Ra	WG	15 " x 6 "	4596 - 381	R700381	R40H597	R40H9200	R40H3540	R40H3541[80]
	Ra	WG	15 " x 7 "	4597 - 383	R700383	R40H597	R40H9200	R40H3540	R40H3541[80]
	Ra	WG	15 " x 7 "	4597 - 383	R700383	R40H597	R40H9200	R40H3540	R40H3541[80]
RF147, E13, RA115	Ra	BX	15 " x 4 "	2032 - 402	Discontinued	R40H510	R40H9223	NLA	NLA[81]
	Rm	BX	15 " x 4 "	2032 - 402	Discontinued	R40H500	R40H9224	R404177	R404176
RF147, RH, E13, E16	Ra	WG	15 " x 5 "	1252 - 379	Discontinued	R40H597	R40H9200	R40H3540	R40H3541[80]
5,000 lb.	Fa	KH	14 " x 2-1/2 "	2060 - 361	Discontinued	R40H596	R40H9219	R40H3536	R40H3537
5000, 7000 lb.	Fa	WG	15 " x 3 "	1245C - 321	R700321	R40H521	R40H9237	R40H3502	R40H3503
6,000 lb.	Fm	BX	14 " x 2-1/4 "	224A - 63	N/A	R40H140	R40H9207	R40H3514	R40H3514
1976									
E17	Ra	WG	15 " x 6 "	4596 - 381	R700381	R40H597	R40H9200	R40H3540	R40H3541[80]
	Ra	WG	15 " x 6 "	4596 - 381	R700381	R40H597	R40H9200	R40H3540	R40H3541[80]
	Ra	WG	15 " x 7 "	4597 - 383	R700383	R40H597	R40H9200	R40H3540	R40H3541[80]
	Ra	WG	15 " x 7 "	4597 - 383	R700383	R40H597	R40H9200	R40H3540	R40H3541[80]
	Ra	WG	15 " x 7 "	4597 - 383	R700383	R40H597	R40H9200	R40H3540	R40H3541[80]
RF147, E13, RA115	Ra	BX	15 " x 4 "	2032 - 402	Discontinued	R40H510	R40H9223	NLA	NLA[81]
	Rm	BX	15 " x 4 "	2032 - 402	Discontinued	R40H500	R40H9224	R404177	R404176
RF147, RH, E13, E16	Ra	WG	15 " x 5 "	1252 - 379	Discontinued	R40H597	R40H9200	R40H3540	R40H3541[80]
5,000 lb.	Fa	KH	14 " x 2-1/2 "	2060 - 361	Discontinued	R40H596	R40H9219	R40H3536	R40H3537
5000, 7000 lb.	Fa	WG	15 " x 3 "	1245C - 321	R700321	R40H521	R40H9237	R40H3502	R40H3503
6,000 lb.	Fm	BX	14 " x 2-1/4 "	224A - 63	N/A	R40H140	R40H9207	R40H3514	R40H3514
1975									
E17	Ra	WG	15 " x 6 "	4596 - 381	R700381	R40H597	R40H9200	R40H3540	R40H3541[80]
	Ra	WG	15 " x 6 "	4596 - 381	R700381	R40H597	R40H9200	R40H3540	R40H3541[80]
	Ra	WG	15 " x 7 "	4597 - 383	R700383	R40H597	R40H9200	R40H3540	R40H3541[80]
	Ra	WG	15 " x 7 "	4597 - 383	R700383	R40H597	R40H9200	R40H3540	R40H3541[80]
RF147, E13, RA115	Ra	BX	15 " x 4 "	2032 - 402	Discontinued	R40H510	R40H9223	NLA	NLA[81]
	Rm	BX	15 " x 4 "	2032 - 402	Discontinued	R40H500	R40H9224	R404177	R404176
RF147, RH, E13, E16	Ra	WG	15 " x 5 "	1252 - 379	Discontinued	R40H597	R40H9200	R40H3540	R40H3541[80]
5,000 lb.	Fa	KH	14 " x 2-1/2 "	2060 - 361	Discontinued	R40H596	R40H9219	R40H3536	R40H3537
5000, 7000 lb.	Fa	WG	15 " x 3 "	1245C - 321	R700321	R40H521	R40H9237	R40H3502	R40H3503
6,000 lb.	Fm	BX	14 " x 2-1/4 "	224A - 63	N/A	R40H140	R40H9207	R40H3514	R40H3514
1974									
E17	Ra	WG	15 " x 6 "	4596 - 381	R700381	R40H597	R40H9200	R40H3540	R40H3541[80]
	Ra	WG	15 " x 6 "	4596 - 381	R700381	R40H597	R40H9200	R40H3540	R40H3541[80]
	Ra	WG	15 " x 7 "	4597 - 383	R700383	R40H597	R40H9200	R40H3540	R40H3541[80]
	Ra	WG	15 " x 7 "	4597 - 383	R700383	R40H597	R40H9200	R40H3540	R40H3541[80]
RF147, E13, RA115	Ra	BX	15 " x 4 "	2032 - 402	Discontinued	R40H510	R40H9223	NLA	NLA[81]
	Rm	BX	15 " x 4 "	2032 - 402	Discontinued	R40H500	R40H9224	R404177	R404176
RF147, RH, E13, E16	Ra	WG	15 " x 5 "	1252 - 379	Discontinued	R40H597	R40H9200	R40H3540	R40H3541[80]
5,000 lb.	Fa	KH	14 " x 2-1/2 "	2060 - 361	Discontinued	R40H596	R40H9219	R40H3536	R40H3537
5000, 7000 lb.	Fa	WG	15 " x 3 "	1245C - 321	R700321	R40H521	R40H9237	R40H3502	R40H3503
6,000 lb.	Fm	BX	14 " x 2-1/4 "	224A - 63	N/A	R40H140	R40H9207	R40H3514	R40H3514
1973									
E16	Ra	WG	15 " x 6 "	4596 - 381	R700381	R40H597	R40H9200	R40H3540	R40H3541[80]
E17	Ra	WG	15 " x 6 "	4596 - 381	R700381	R40H597	R40H9200	R40H3540	R40H3541[80]

53 - Power Brakes

80 - 1.67 Ratio

81 - Adjusting Screw is No Longer Available

MERITOR DRUM OR ROTOR NO.	CALIPER OR CYLINDER BORE SIZE	MERITOR CALIPER OR WHEEL CYLINDER (LEFT)	MERITOR CALIPER OR WHEEL CYLINDER (RIGHT)	MERITOR CALIPER OR WHEEL CYLINDER REPAIR KIT	MERITOR CALIPER PISTON	MERITOR MASTER CYLINDER	MERITOR MASTER CYLINDER KIT	MERITOR BRAKE HOSE (LEFT)	MERITOR BRAKE HOSE (RIGHT)
									DODGE(Cont.)
									500 SERIES(Cont.)
-	1-1/2 "	R4133390	R4133390	R4166818	NR	-	-	-	-
-	1-1/2 "	R4133390	R4133390	R4166818	NR	-	-	-	-
-	1-5/8 "	R4133338	R4133338	R4166689	NR	-	-	-	-
-	1-1/16 "	R4133540	R4133541	R4166821	NR	-	-	-	-
-	1-1/8 "	R4133714	R4133715	R4166926	NR	-	-	-	-
-	1-5/8 "	R4133338	R4133338	R4166689	NR	-	-	-	-
-	1-5/8 "	R4133338	R4133338	R4166689	NR	-	-	-	-
-	1-5/8 "	R4133338	R4133338	R4166689	NR	-	-	-	-
-	1-5/8 "	R4133338	R4133338	R4166689	NR	-	-	-	-
									600 SERIES
-	1-5/8 "	R4133338	R4133338	R4166689	NR	-	-	-	-
-	1-5/8 "	R4133338	R4133338	R4166689	NR	-	-	-	-
-	1-5/8 "	R4133338	R4133338	R4166689	NR	-	-	-	-
-	1-5/8 "	R4133338	R4133338	R4166689	NR	-	-	-	-
-	1-1/2 "	R4133390	R4133390	R4166818	NR	-	-	-	-
-	1-1/2 "	R4133390	R4133390	R4166818	NR	-	-	-	-
-	1-5/8 "	R4133338	R4133338	R4166689	NR	-	-	-	-
-	1-1/16 "	R4133540	R4133541	R4166821	NR	R4111583[53]	R4122598	-	-
-	1-1/8 "	R4133714	R4133715	R4166926	NR	R4111583[53]	R4122598	-	-
-	1.09375	R4133484	R4133485	R4166819	NR	R4111583[53]	R4122598	-	-
-	1-5/8 "	R4133338	R4133338	R4166689	NR	-	-	-	-
-	1-5/8 "	R4133338	R4133338	R4166689	NR	-	-	-	-
-	1-5/8 "	R4133338	R4133338	R4166689	NR	-	-	-	-
-	1-5/8 "	R4133338	R4133338	R4166689	NR	-	-	-	-
-	1-5/8 "	R4133338	R4133338	R4166689	NR	-	-	-	-
-	1-1/2 "	R4133390	R4133390	R4166818	NR	-	-	-	-
-	1-1/2 "	R4133390	R4133390	R4166818	NR	-	-	-	-
-	1-5/8 "	R4133338	R4133338	R4166689	NR	-	-	-	-
-	1-1/16 "	R4133540	R4133541	R4166821	NR	R4111583[53]	R4122598	-	-
-	1-1/8 "	R4133714	R4133715	R4166926	NR	R4111583[53]	R4122598	-	-
-	1.09375	R4133484	R4133485	R4166819	NR	R4111583[53]	R4122598	-	-
-	1-5/8 "	R4133338	R4133338	R4166689	NR	-	-	-	-
-	1-5/8 "	R4133338	R4133338	R4166689	NR	-	-	-	-
-	1-5/8 "	R4133338	R4133338	R4166689	NR	-	-	-	-
-	1-5/8 "	R4133338	R4133338	R4166689	NR	-	-	-	-
-	1-1/2 "	R4133390	R4133390	R4166818	NR	-	-	-	-
-	1-1/2 "	R4133390	R4133390	R4166818	NR	-	-	-	-
-	1-5/8 "	R4133338	R4133338	R4166689	NR	-	-	-	-
-	1-1/16 "	R4133540	R4133541	R4166821	NR	-	-	-	-
-	1-1/8 "	R4133714	R4133715	R4166926	NR	-	-	-	-
-	1.09375	R4133484	R4133485	R4166819	NR	-	-	-	-
-	1-5/8 "	R4133338	R4133338	R4166689	NR	-	-	-	-
-	1-5/8 "	R4133338	R4133338	R4166689	NR	-	-	-	-
-	1-5/8 "	R4133338	R4133338	R4166689	NR	-	-	-	-
-	1-5/8 "	R4133338	R4133338	R4166689	NR	-	-	-	-
-	1-1/2 "	R4133390	R4133390	R4166818	NR	-	-	-	-
-	1-1/2 "	R4133390	R4133390	R4166818	NR	-	-	-	-
-	1-5/8 "	R4133338	R4133338	R4166689	NR	-	-	-	-
-	1-1/16 "	R4133540	R4133541	R4166821	NR	-	-	-	-
-	1-1/8 "	R4133714	R4133715	R4166926	NR	-	-	-	-
-	1.09375	R4133484	R4133485	R4166819	NR	-	-	-	-
-	1-5/8 "	R4133338	R4133338	R4166689	NR	-	-	-	-
-	1-5/8 "	R4133338	R4133338	R4166689	NR	-	-	-	-

MAKE MODEL YEAR AXLE CODE AXLE WEIGHT	AXLE & BRK. TYPE	BRK. MFG.	BRAKE SIZE	FMSI	MERITOR DISC PAD OR BRAKE SHOE	MERITOR GUIDE PIN OR RETURN SPRING KIT	MERITOR CALIPER HWD. KIT OR RETURN SPRING KIT	MERITOR ADJUSTER KIT (LEFT WHEEL)	MERITOR ADJUSTER KIT (RIGHT WHEEL)
DODGE(Cont.)									
600 SERIES(Cont.)									
1973									
	Ra	WG	15 " x 6 "	4596 - 381	R700381	R40H597	R40H9200	R40H3540	R40H3541[80]
	Ra	WG	15 " x 7 "	4597 - 383	R700383	R40H597	R40H9200	R40H3540	R40H3541[80]
	Ra	WG	15 " x 7 "	4597 - 383	R700383	R40H597	R40H9200	R40H3540	R40H3541[80]
RF147, E13, RA115	Ra	BX	15 " x 4 "	2032 - 402	Discontinued	R40H510	R40H9223	NLA	NLA[81]
	Rm	BX	15 " x 4 "	2032 - 402	Discontinued	R40H500	R40H9224	R404177	R404176
RF147, RH, E13, E16	Ra	WG	15 " x 5 "	1252 - 379	Discontinued	R40H597	R40H9200	R40H3540	R40H3541[80]
5000, 7000 lb.	Fa	WG	15 " x 3 "	1245C - 321	R700321	R40H521	R40H9237	R40H3502	R40H3503
1972									
E17	Ra	WG	15 " x 6 "	4596 - 381	R700381	R40H597	R40H9200	R40H3540	R40H3541[80]
	Ra	WG	15 " x 6 "	4596 - 381	R700381	R40H597	R40H9200	R40H3540	R40H3541[80]
	Ra	WG	15 " x 7 "	4597 - 383	R700383	R40H597	R40H9200	R40H3540	R40H3541[80]
	Ra	WG	15 " x 7 "	4597 - 383	R700383	R40H597	R40H9200	R40H3540	R40H3541[80]
RF147, E13, RA115	Ra	BX	15 " x 4 "	2032 - 402	Discontinued	R40H510	R40H9223	NLA	NLA[81]
	Rm	BX	15 " x 4 "	2032 - 402	Discontinued	R40H500	R40H9224	R404177	R404176
RF147, RH, E13, E16	Ra	WG	15 " x 5 "	1252 - 379	Discontinued	R40H597	R40H9200	R40H3540	R40H3541[80]
5000, 7000 lb.	Fa	WG	15 " x 3 "	1245C - 321	R700321	R40H521	R40H9237	R40H3502	R40H3503
1971									
E17	Ra	WG	15 " x 6 "	4596 - 381	R700381	R40H597	R40H9200	R40H3540	R40H3541[80]
	Ra	WG	15 " x 6 "	4596 - 381	R700381	R40H597	R40H9200	R40H3540	R40H3541[80]
	Ra	WG	15 " x 7 "	4597 - 383	R700383	R40H597	R40H9200	R40H3540	R40H3541[80]
	Ra	WG	15 " x 7 "	4597 - 383	R700383	R40H597	R40H9200	R40H3540	R40H3541[80]
RF147, E13, RA115	Ra	BX	15 " x 4 "	2032 - 402	Discontinued	R40H510	R40H9223	NLA	NLA[81]
	Rm	BX	15 " x 4 "	2032 - 402	Discontinued	R40H500	R40H9224	R404177	R404176
RF147, RH, E13, E16	Ra	WG	15 " x 5 "	1252 - 379	Discontinued	R40H597	R40H9200	R40H3540	R40H3541[80]
5000, 7000 lb.	Fa	WG	15 " x 3 "	1245C - 321	R700321	R40H521	R40H9237	R40H3502	R40H3503
1970									
E17	Ra	WG	15 " x 6 "	4596 - 381	R700381	R40H597	R40H9200	R40H3540	R40H3541[80]
	Ra	WG	15 " x 6 "	4596 - 381	R700381	R40H597	R40H9200	R40H3540	R40H3541[80]
	Ra	WG	15 " x 7 "	4597 - 383	R700383	R40H597	R40H9200	R40H3540	R40H3541[80]
	Ra	WG	15 " x 7 "	4597 - 383	R700383	R40H597	R40H9200	R40H3540	R40H3541[80]
RF147, E13, RA115	Ra	BX	15 " x 4 "	2032 - 402	Discontinued	R40H510	R40H9223	NLA	NLA[81]
	Rm	BX	15 " x 4 "	2032 - 402	Discontinued	R40H500	R40H9224	R404177	R404176
RF147, RH, E13, E16	Ra	WG	15 " x 5 "	1252 - 379	Discontinued	R40H597	R40H9200	R40H3540	R40H3541[80]
5000, 7000 lb.	Fa	WG	15 " x 3 "	1245C - 321	R700321	R40H521	R40H9237	R40H3502	R40H3503
1969									
E17	Ra	WG	15 " x 6 "	4596 - 381	R700381	R40H597	R40H9200	R40H3540	R40H3541[80]
	Ra	WG	15 " x 6 "	4596 - 381	R700381	R40H597	R40H9200	R40H3540	R40H3541[80]
	Ra	WG	15 " x 7 "	4597 - 383	R700383	R40H597	R40H9200	R40H3540	R40H3541[80]
RF147, E13, RA115	Ra	BX	15 " x 4 "	2032 - 402	Discontinued	R40H510	R40H9223	NLA	NLA[81]
	Rm	BX	15 " x 4 "	2032 - 402	Discontinued	R40H500	R40H9224	R404177	R404176
RF147, RH, E13, E16	Ra	WG	15 " x 5 "	1252 - 379	Discontinued	R40H597	R40H9200	R40H3540	R40H3541[80]
5000, 7000 lb.	Fa	WG	15 " x 3 "	1245C - 321	R700321	R40H521	R40H9237	R40H3502	R40H3503
700 SERIES									
1971									
E16	Ra	WG	15 " x 6 "	4596 - 381	R700381	R40H597	R40H9200	R40H3540	R40H3541[80]
E17	Ra	WG	15 " x 6 "	4596 - 381	R700381	R40H597	R40H9200	R40H3540	R40H3541[80]
	Ra	WG	15 " x 7 "	4597 - 383	R700383	R40H597	R40H9200	R40H3540	R40H3541[80]
	Ra	WG	15 " x 7 "	4597 - 383	R700383	R40H597	R40H9200	R40H3540	R40H3541[80]
RF147H, E13, E16	Ra	WG	15 " x 5 "	1252 - 379	Discontinued	R40H597	R40H9200	R40H3540	R40H3541[80]
5000, 7000 lb.	Fa	WG	15 " x 3 "	1245C - 321	R700321	R40H521	R40H9237	R40H3502	R40H3503
9,000 lb.	Fa	WG	15 " x 3 "	1245C - 321	R700321	R40H521	R40H9237	R40H3502	R40H3503
9,000, 12,000 lb.	Fa	WG	15 " x 3-1/2 "	1280B - 322	R464004	R40H521	R40H9237	R40H3502	R40H3503
1970									
E16	Ra	WG	15 " x 6 "	4596 - 381	R700381	R40H597	R40H9200	R40H3540	R40H3541[80]
E17	Ra	WG	15 " x 6 "	4596 - 381	R700381	R40H597	R40H9200	R40H3540	R40H3541[80]
	Ra	WG	15 " x 7 "	4597 - 383	R700383	R40H597	R40H9200	R40H3540	R40H3541[80]
	Ra	WG	15 " x 7 "	4597 - 383	R700383	R40H597	R40H9200	R40H3540	R40H3541[80]
RF147H, E13, E16	Ra	WG	15 " x 5 "	1252 - 379	Discontinued	R40H597	R40H9200	R40H3540	R40H3541[80]
5000, 7000 lb.	Fa	WG	15 " x 3 "	1245C - 321	R700321	R40H521	R40H9237	R40H3502	R40H3503
9,000 lb.	Fa	WG	15 " x 3 "	1245C - 321	R700321	R40H521	R40H9237	R40H3502	R40H3503
9,000, 12,000 lb.	Fa	WG	15 " x 3-1/2 "	1280B - 322	R464004	R40H521	R40H9237	R40H3502	R40H3503
1969									
E16	Ra	WG	15 " x 6 "	4596 - 381	R700381	R40H597	R40H9200	R40H3540	R40H3541[80]

80 - 1.67 Ratio

81 - Adjusting Screw is No Longer Available

MERITOR DRUM OR ROTOR NO.	CALIPER OR CYLINDER BORE SIZE	MERITOR CALIPER OR WHEEL CYLINDER (LEFT)	MERITOR CALIPER OR WHEEL CYLINDER (RIGHT)	MERITOR CALIPER OR WHEEL CYLINDER REPAIR KIT	MERITOR CALIPER PISTON	MERITOR MASTER CYLINDER	MERITOR MASTER CYLINDER KIT	MERITOR BRAKE HOSE (LEFT)	MERITOR BRAKE HOSE (RIGHT)
									DODGE(Cont.)
									600 SERIES(Cont.)
-	1-5/8 "	R4133338	R4133338	R4166689	NR	-	-	-	-
-	1-5/8 "	R4133338	R4133338	R4166689	NR	-	-	-	-
-	1-5/8 "	R4133338	R4133338	R4166689	NR	-	-	-	-
-	1-1/2 "	R4133390	R4133390	R4166818	NR	-	-	-	-
-	1-1/2 "	R4133390	R4133390	R4166818	NR	-	-	-	-
-	1-5/8 "	R4133338	R4133338	R4166689	NR	-	-	-	-
-	1-1/8 "	R4133714	R4133715	R4166926	NR	-	-	-	-
-	1-5/8 "	R4133338	R4133338	R4166689	NR	-	-	-	-
-	1-5/8 "	R4133338	R4133338	R4166689	NR	-	-	-	-
-	1-5/8 "	R4133338	R4133338	R4166689	NR	-	-	-	-
-	1-5/8 "	R4133338	R4133338	R4166689	NR	-	-	-	-
-	1-1/2 "	R4133390	R4133390	R4166818	NR	-	-	-	-
-	1-1/2 "	R4133390	R4133390	R4166818	NR	-	-	-	-
-	1-5/8 "	R4133338	R4133338	R4166689	NR	-	-	-	-
-	1-1/8 "	R4133714	R4133715	R4166926	NR	-	-	-	-
-	1-5/8 "	R4133338	R4133338	R4166689	NR	-	-	-	-
-	1-5/8 "	R4133338	R4133338	R4166689	NR	-	-	-	-
-	1-5/8 "	R4133338	R4133338	R4166689	NR	-	-	-	-
-	1-5/8 "	R4133338	R4133338	R4166689	NR	-	-	-	-
-	1-1/2 "	R4133390	R4133390	R4166818	NR	-	-	-	-
-	1-1/2 "	R4133390	R4133390	R4166818	NR	-	-	-	-
-	1-5/8 "	R4133338	R4133338	R4166689	NR	-	-	-	-
-	1-1/8 "	R4133714	R4133715	R4166926	NR	-	-	-	-
-	1-5/8 "	R4133338	R4133338	R4166689	NR	-	-	-	-
-	1-5/8 "	R4133338	R4133338	R4166689	NR	-	-	-	-
-	1-5/8 "	R4133338	R4133338	R4166689	NR	-	-	-	-
-	1-1/2 "	R4133390	R4133390	R4166818	NR	-	-	-	-
-	1-1/2 "	R4133390	R4133390	R4166818	NR	-	-	-	-
-	1-5/8 "	R4133338	R4133338	R4166689	NR	-	-	-	-
-	1-1/8 "	R4133714	R4133715	R4166926	NR	-	-	-	-
									700 SERIES
-	1-5/8 "	R4133338	R4133338	R4166689	NR	-	-	-	-
-	1-5/8 "	R4133338	R4133338	R4166689	NR	-	-	-	-
-	1-5/8 "	R4133338	R4133338	R4166689	NR	-	-	-	-
-	1-5/8 "	R4133338	R4133338	R4166689	NR	-	-	-	-
-	1-5/8 "	R4133338	R4133338	R4166689	NR	-	-	-	-
-	1-1/8 "	R4133714	R4133715	R4166926	NR	-	-	-	-
-	1-1/4 "	R4133582	R4133581	R4166923	NR	-	-	-	-
-	1-1/4 "	R4133582	R4133581	R4166923	NR	-	-	-	-
-	1-5/8 "	R4133338	R4133338	R4166689	NR	-	-	-	-
-	1-5/8 "	R4133338	R4133338	R4166689	NR	-	-	-	-
-	1-5/8 "	R4133338	R4133338	R4166689	NR	-	-	-	-
-	1-5/8 "	R4133338	R4133338	R4166689	NR	-	-	-	-
-	1-5/8 "	R4133338	R4133338	R4166689	NR	-	-	-	-
-	1-1/8 "	R4133714	R4133715	R4166926	NR	-	-	-	-
-	1-1/4 "	R4133582	R4133581	R4166923	NR	-	-	-	-
-	1-1/4 "	R4133582	R4133581	R4166923	NR	-	-	-	-
-	1-5/8 "	R4133338	R4133338	R4166689	NR	-	-	-	-

MAKE MODEL YEAR AXLE CODE AXLE WEIGHT	AXLE & BRK. TYPE	BRK. MFG.	BRAKE SIZE	FMSI	MERITOR DISC PAD OR BRAKE SHOE	MERITOR GUIDE PIN OR RETURN SPRING KIT	MERITOR CALIPER HWD. KIT OR RETURN SPRING KIT	MERITOR ADJUSTER KIT (LEFT WHEEL)	MERITOR ADJUSTER KIT (RIGHT WHEEL)
DODGE(Cont.)									
700 SERIES(Cont.)									
1969									
E17	Ra	WG	15 " x 6 "	4596 - 381	R700381	R40H597	R40H9200	R40H3540	R40H3541[80]
	Ra	WG	15 " x 7 "	4597 - 383	R700383	R40H597	R40H9200	R40H3540	R40H3541[80]
	Ra	WG	15 " x 7 "	4597 - 383	R700383	R40H597	R40H9200	R40H3540	R40H3541[80]
RF147H, E13, E16	Ra	WG	15 " x 5 "	1252 - 379	Discontinued	R40H597	R40H9200	R40H3540	R40H3541[80]
5000, 7000 lb.	Fa	WG	15 " x 3 "	1245C - 321	R700321	R40H521	R40H9237	R40H3502	R40H3503
9,000 lb.	Fa	WG	15 " x 3 "	1245C - 321	R700321	R40H521	R40H9237	R40H3502	R40H3503
9,000, 12,000 lb.	Fa	WG	15 " x 3-1/2 "	1280B - 322	R464004	R40H521	R40H9237	R40H3502	R40H3503
800 SERIES									
1975									
E17	Ra	WG	15 " x 6 "	4596 - 381	R700381	R40H597	R40H9200	R40H3540	R40H3541[80]
	Ra	WG	15 " x 6 "	4596 - 381	R700381	R40H597	R40H9200	R40H3540	R40H3541[80]
	Ra	WG	15 " x 7 "	4597 - 383	R700383	R40H597	R40H9200	R40H3540	R40H3541[80]
	Ra	WG	15 " x 7 "	4597 - 383	R700383	R40H597	R40H9200	R40H3540	R40H3541[80]
5000, 5500, 7000, 9000 lb.	Fa	WG	15 " x 3 "	1245C - 321	R700321	R40H521	R40H9237	R40H3502	R40H3503
	Fa	WG	15 " x 3 "	1245C - 321	R700321	R40H521	R40H9237	R40H3502	R40H3503
9,000, 12,000 lb.	Fa	WG	15 " x 3-1/2 "	1280B - 322	R464004	R40H521	R40H9237	R40H3502	R40H3503
1974									
E17	Ra	WG	15 " x 6 "	4596 - 381	R700381	R40H597	R40H9200	R40H3540	R40H3541[80]
	Ra	WG	15 " x 6 "	4596 - 381	R700381	R40H597	R40H9200	R40H3540	R40H3541[80]
	Ra	WG	15 " x 7 "	4597 - 383	R700383	R40H597	R40H9200	R40H3540	R40H3541[80]
	Ra	WG	15 " x 7 "	4597 - 383	R700383	R40H597	R40H9200	R40H3540	R40H3541[80]
5000, 5500, 7000, 9000 lb.	Fa	WG	15 " x 3 "	1245C - 321	R700321	R40H521	R40H9237	R40H3502	R40H3503
	Fa	WG	15 " x 3 "	1245C - 321	R700321	R40H521	R40H9237	R40H3502	R40H3503
9,000, 12,000 lb.	Fa	WG	15 " x 3-1/2 "	1280B - 322	R464004	R40H521	R40H9237	R40H3502	R40H3503
1973									
E17	Ra	WG	15 " x 6 "	4596 - 381	R700381	R40H597	R40H9200	R40H3540	R40H3541[80]
	Ra	WG	15 " x 6 "	4596 - 381	R700381	R40H597	R40H9200	R40H3540	R40H3541[80]
	Ra	WG	15 " x 7 "	4597 - 383	R700383	R40H597	R40H9200	R40H3540	R40H3541[80]
	Ra	WG	15 " x 7 "	4597 - 383	R700383	R40H597	R40H9200	R40H3540	R40H3541[80]
5000, 5500, 7000, 9000 lb.	Fa	WG	15 " x 3 "	1245C - 321	R700321	R40H521	R40H9237	R40H3502	R40H3503
	Fa	WG	15 " x 3 "	1245C - 321	R700321	R40H521	R40H9237	R40H3502	R40H3503
9,000, 12,000 lb.	Fa	WG	15 " x 3-1/2 "	1280B - 322	R464004	R40H521	R40H9237	R40H3502	R40H3503
1972									
E17	Ra	WG	15 " x 6 "	4596 - 381	R700381	R40H597	R40H9200	R40H3540	R40H3541[80]
	Ra	WG	15 " x 6 "	4596 - 381	R700381	R40H597	R40H9200	R40H3540	R40H3541[80]
	Ra	WG	15 " x 7 "	4597 - 383	R700383	R40H597	R40H9200	R40H3540	R40H3541[80]
	Ra	WG	15 " x 7 "	4597 - 383	R700383	R40H597	R40H9200	R40H3540	R40H3541[80]
5000, 5500, 7000, 9000 lb.	Fa	WG	15 " x 3 "	1245C - 321	R700321	R40H521	R40H9237	R40H3502	R40H3503
	Fa	WG	15 " x 3 "	1245C - 321	R700321	R40H521	R40H9237	R40H3502	R40H3503
9,000, 12,000 lb.	Fa	WG	15 " x 3-1/2 "	1280B - 322	R464004	R40H521	R40H9237	R40H3502	R40H3503
1971									
E17	Ra	WG	15 " x 6 "	4596 - 381	R700381	R40H597	R40H9200	R40H3540	R40H3541[80]
	Ra	WG	15 " x 6 "	4596 - 381	R700381	R40H597	R40H9200	R40H3540	R40H3541[80]
	Ra	WG	15 " x 7 "	4597 - 383	R700383	R40H597	R40H9200	R40H3540	R40H3541[80]
	Ra	WG	15 " x 7 "	4597 - 383	R700383	R40H597	R40H9200	R40H3540	R40H3541[80]
5000, 5500, 7000, 9000 lb.	Fa	WG	15 " x 3 "	1245C - 321	R700321	R40H521	R40H9237	R40H3502	R40H3503
	Fa	WG	15 " x 3 "	1245C - 321	R700321	R40H521	R40H9237	R40H3502	R40H3503
9,000, 12,000 lb.	Fa	WG	15 " x 3-1/2 "	1280B - 322	R464004	R40H521	R40H9237	R40H3502	R40H3503
1970									
E17	Ra	WG	15 " x 6 "	4596 - 381	R700381	R40H597	R40H9200	R40H3540	R40H3541[80]
	Ra	WG	15 " x 6 "	4596 - 381	R700381	R40H597	R40H9200	R40H3540	R40H3541[80]
	Ra	WG	15 " x 7 "	4597 - 383	R700383	R40H597	R40H9200	R40H3540	R40H3541[80]
	Ra	WG	15 " x 7 "	4597 - 383	R700383	R40H597	R40H9200	R40H3540	R40H3541[80]
5000, 5500, 7000, 9000 lb.	Fa	WG	15 " x 3 "	1245C - 321	R700321	R40H521	R40H9237	R40H3502	R40H3503
	Fa	WG	15 " x 3 "	1245C - 321	R700321	R40H521	R40H9237	R40H3502	R40H3503
9,000, 12,000 lb.	Fa	WG	15 " x 3-1/2 "	1280B - 322	R464004	R40H521	R40H9237	R40H3502	R40H3503
1969									
E17	Ra	WG	15 " x 6 "	4596 - 381	R700381	R40H597	R40H9200	R40H3540	R40H3541[80]
	Ra	WG	15 " x 6 "	4596 - 381	R700381	R40H597	R40H9200	R40H3540	R40H3541[80]
	Ra	WG	15 " x 7 "	4597 - 383	R700383	R40H597	R40H9200	R40H3540	R40H3541[80]
	Ra	WG	15 " x 7 "	4597 - 383	R700383	R40H597	R40H9200	R40H3540	R40H3541[80]
5000, 5500, 7000, 9000 lb.	Fa	WG	15 " x 3 "	1245C - 321	R700321	R40H521	R40H9237	R40H3502	R40H3503
	Fa	WG	15 " x 3 "	1245C - 321	R700321	R40H521	R40H9237	R40H3502	R40H3503

80 - 1.67 Ratio

MERITOR DRUM OR ROTOR NO.	CALIPER OR CYLINDER BORE SIZE	MERITOR CALIPER OR WHEEL CYLINDER (LEFT)	MERITOR CALIPER OR WHEEL CYLINDER (RIGHT)	MERITOR CALIPER OR WHEEL CYLINDER REPAIR KIT	MERITOR CALIPER PISTON	MERITOR MASTER CYLINDER	MERITOR MASTER CYLINDER KIT	MERITOR BRAKE HOSE (LEFT)	MERITOR BRAKE HOSE (RIGHT)
									DODGE(Cont.)
									700 SERIES(Cont.)
-	1-5/8 "	R4133338	R4133338	R4166689	NR	-	-	-	-
-	1-5/8 "	R4133338	R4133338	R4166689	NR	-	-	-	-
-	1-5/8 "	R4133338	R4133338	R4166689	NR	-	-	-	-
-	1-5/8 "	R4133338	R4133338	R4166689	NR	-	-	-	-
-	1-1/8 "	R4133714	R4133715	R4166926	NR	-	-	-	-
-	1-1/4 "	R4133582	R4133581	R4166923	NR	-	-	-	-
-	1-1/4 "	R4133582	R4133581	R4166923	NR	-	-	-	-
									800 SERIES
-	1-5/8 "	R4133338	R4133338	R4166689	NR	-	-	-	-
-	1-5/8 "	R4133338	R4133338	R4166689	NR	-	-	-	-
-	1-5/8 "	R4133338	R4133338	R4166689	NR	-	-	-	-
-	1-5/8 "	R4133338	R4133338	R4166689	NR	-	-	-	-
-	1-1/4 "	R4133582	R4133581	R4166923	NR	-	-	-	-
-	1-1/8 "	R4133714	R4133715	R4166926	NR	-	-	-	-
-	1-1/4 "	R4133582	R4133581	R4166923	NR	-	-	-	-
-	1-5/8 "	R4133338	R4133338	R4166689	NR	-	-	-	-
-	1-5/8 "	R4133338	R4133338	R4166689	NR	-	-	-	-
-	1-5/8 "	R4133338	R4133338	R4166689	NR	-	-	-	-
-	1-5/8 "	R4133338	R4133338	R4166689	NR	-	-	-	-
-	1-1/8 "	R4133714	R4133715	R4166926	NR	-	-	-	-
-	1-1/4 "	R4133582	R4133581	R4166923	NR	-	-	-	-
-	1-1/4 "	R4133582	R4133581	R4166923	NR	-	-	-	-
-	1-5/8 "	R4133338	R4133338	R4166689	NR	-	-	-	-
-	1-5/8 "	R4133338	R4133338	R4166689	NR	-	-	-	-
-	1-5/8 "	R4133338	R4133338	R4166689	NR	-	-	-	-
-	1-5/8 "	R4133338	R4133338	R4166689	NR	-	-	-	-
-	1-1/4 "	R4133582	R4133581	R4166923	NR	-	-	-	-
-	1-1/8 "	R4133714	R4133715	R4166926	NR	-	-	-	-
-	1-1/4 "	R4133582	R4133581	R4166923	NR	-	-	-	-
-	1-5/8 "	R4133338	R4133338	R4166689	NR	-	-	-	-
-	1-5/8 "	R4133338	R4133338	R4166689	NR	-	-	-	-
-	1-5/8 "	R4133338	R4133338	R4166689	NR	-	-	-	-
-	1-5/8 "	R4133338	R4133338	R4166689	NR	-	-	-	-
-	1-1/8 "	R4133714	R4133715	R4166926	NR	-	-	-	-
-	1-1/4 "	R4133582	R4133581	R4166923	NR	-	-	-	-
-	1-1/4 "	R4133582	R4133581	R4166923	NR	-	-	-	-
-	1-5/8 "	R4133338	R4133338	R4166689	NR	-	-	-	-
-	1-5/8 "	R4133338	R4133338	R4166689	NR	-	-	-	-
-	1-5/8 "	R4133338	R4133338	R4166689	NR	-	-	-	-
-	1-5/8 "	R4133338	R4133338	R4166689	NR	-	-	-	-
-	1-1/4 "	R4133582	R4133581	R4166923	NR	-	-	-	-
-	1-1/8 "	R4133714	R4133715	R4166926	NR	-	-	-	-
-	1-1/4 "	R4133582	R4133581	R4166923	NR	-	-	-	-
-	1-5/8 "	R4133338	R4133338	R4166689	NR	-	-	-	-
-	1-5/8 "	R4133338	R4133338	R4166689	NR	-	-	-	-
-	1-5/8 "	R4133338	R4133338	R4166689	NR	-	-	-	-
-	1-5/8 "	R4133338	R4133338	R4166689	NR	-	-	-	-
-	1-1/4 "	R4133582	R4133581	R4166923	NR	-	-	-	-
-	1-1/8 "	R4133714	R4133715	R4166926	NR	-	-	-	-
-	1-1/4 "	R4133582	R4133581	R4166923	NR	-	-	-	-
-	1-5/8 "	R4133338	R4133338	R4166689	NR	-	-	-	-
-	1-5/8 "	R4133338	R4133338	R4166689	NR	-	-	-	-
-	1-5/8 "	R4133338	R4133338	R4166689	NR	-	-	-	-
-	1-5/8 "	R4133338	R4133338	R4166689	NR	-	-	-	-
-	1-1/4 "	R4133582	R4133581	R4166923	NR	-	-	-	-
-	1-1/8 "	R4133714	R4133715	R4166926	NR	-	-	-	-

MAKE MODEL YEAR AXLE CODE AXLE WEIGHT	AXLE & BRK. TYPE	BRK. MFG.	BRAKE SIZE	FMSI	MERITOR DISC PAD OR BRAKE SHOE	MERITOR GUIDE PIN OR RETURN SPRING KIT	MERITOR CALIPER HWD. KIT OR RETURN SPRING KIT	MERITOR ADJUSTER KIT (LEFT WHEEL)	MERITOR ADJUSTER KIT (RIGHT WHEEL)
DODGE(Cont.)									
800 SERIES(Cont.)									
1969 9,000, 12,000 lb.	Fa	WG	15 " x 3-1/2 "	1280B - 322	R464004	R40H521	R40H9237	R40H3502	R40H3503
900 SERIES									
1973	Fa	WG	15 " x 3 "	1245C - 321	R700321	R40H521	R40H9237	R40H3502	R40H3503
E-300, R-SHHD	TRa TRa	WG WG	15 " x 5 " 15 " x 6 "	1252 - 379 4596 - 381	Discontinued R700381	R40H597 R40H597	R40H9200 R40H9200	R40H3540 R40H3540	R40H3541[80] R40H3541[80]
5000, 7000, 9000 lb.	Fa	WG	15 " x 3 "	1245C - 321	R700321	R40H521	R40H9237	R40H3502	R40H3503
12,000 lb.	Fa	WG	15 " x 3-1/2 "	1280B - 322	R464004	R40H521	R40H9237	R40H3502	R40H3503
1972	Fa	WG	15 " x 3 "	1245C - 321	R700321	R40H521	R40H9237	R40H3502	R40H3503
E-300, R-SHHD	TRa TRa	WG WG	15 " x 5 " 15 " x 6 "	1252 - 379 4596 - 381	Discontinued R700381	R40H597 R40H597	R40H9200 R40H9200	R40H3540 R40H3540	R40H3541[80] R40H3541[80]
5000, 7000, 9000 lb.	Fa	WG	15 " x 3 "	1245C - 321	R700321	R40H521	R40H9237	R40H3502	R40H3503
12,000 lb.	Fa	WG	15 " x 3-1/2 "	1280B - 322	R464004	R40H521	R40H9237	R40H3502	R40H3503
1971	Fa	WG	15 " x 3 "	1245C - 321	R700321	R40H521	R40H9237	R40H3502	R40H3503
E-300, R-SHHD	TRa TRa	WG WG	15 " x 5 " 15 " x 6 "	1252 - 379 4596 - 381	Discontinued R700381	R40H597 R40H597	R40H9200 R40H9200	R40H3540 R40H3540	R40H3541[80] R40H3541[80]
5000, 7000, 9000 lb.	Fa	WG	15 " x 3 "	1245C - 321	R700321	R40H521	R40H9237	R40H3502	R40H3503
12,000 lb.	Fa	WG	15 " x 3-1/2 "	1280B - 322	R464004	R40H521	R40H9237	R40H3502	R40H3503
1970	Fa	WG	15 " x 3 "	1245C - 321	R700321	R40H521	R40H9237	R40H3502	R40H3503
E-300, R-SHHD	TRa TRa	WG WG	15 " x 5 " 15 " x 6 "	1252 - 379 4596 - 381	Discontinued R700381	R40H597 R40H597	R40H9200 R40H9200	R40H3540 R40H3540	R40H3541[80] R40H3541[80]
5000, 7000, 9000 lb.	Fa	WG	15 " x 3 "	1245C - 321	R700321	R40H521	R40H9237	R40H3502	R40H3503
12,000 lb.	Fa	WG	15 " x 3-1/2 "	1280B - 322	R464004	R40H521	R40H9237	R40H3502	R40H3503
1969	Fa	WG	15 " x 3 "	1245C - 321	R700321	R40H521	R40H9237	R40H3502	R40H3503
E-300, R-SHHD	TRa TRa	WG WG	15 " x 5 " 15 " x 6 "	1252 - 379 4596 - 381	Discontinued R700381	R40H597 R40H597	R40H9200 R40H9200	R40H3540 R40H3540	R40H3541[80] R40H3541[80]
5000, 7000, 9000 lb.	Fa	WG	15 " x 3 "	1245C - 321	R700321	R40H521	R40H9237	R40H3502	R40H3503
12,000 lb.	Fa	WG	15 " x 3-1/2 "	1280B - 322	R464004	R40H521	R40H9237	R40H3502	R40H3503
B200, B250 SERIES VAN - 3/4 TON									
2003	Ra		12.125 x 3-1/2 "	2171T - 583	R468140	R40H7299	NR	R40H2598	R40H2599
Rear Wheel Antilock Brakes 4000 lb	Fd	KH		7536 - D655	MD655	R40H5735	R4011133	NR	NR
2002	Ra		12.125 x 3-1/2 "	2171T - 583	R468140	R40H7299	NR	R40H2598	R40H2599
Rear Wheel Antilock Brakes 4000 lb	Fd	KH		7536 - D655	MD655	R40H5735	R4011133	NR	NR
2001	Ra		12.125 x 3-1/2 "	2171T - 583	R468140	R40H7299	NR	R40H2598	R40H2599
All Wheel Antilock Brakes 3300 lb	Fd	KH		7536 - D655	MD655	R40H5735	R4011133	NR	NR
Rear Wheel Antilock Brakes 4000 lb	Fd	KH		7536 - D655	MD655	R40H5735	R4011133	NR	NR
2000	Ra		12.125 x 3-1/2 "	2171T - 583	R468140	R40H7299	NR	R40H2598	R40H2599
All Wheel Antilock Brakes 3300 lb	Fd	KH		7536 - D655	MD655	R40H5735	R4011133	NR	NR
Rear Wheel Antilock Brakes 4000 lb	Fd	KH		7536 - D655	MD655	R40H5735	R4011133	NR	NR
1999	Ra Ra		11 " x 2-1/4 " 12.125 x 3-1/2 "	2182TT - 723 2171T - 583	R46723 R468140	R40H7133 R40H7299	NR NR	R40H2534 R40H2598	R40H2535 R40H2599
All Wheel Antilock Brakes 3300 lb	Fd	KH		7536 - D655	MD655	R40H5735	R4011133	NR	NR
Rear Wheel Antilock Brakes 4000 lb	Fd	KH		7536 - D655	MD655	R40H5735	R4011133	NR	NR
1998	Ra		11 " x 2-1/4 "	2182TT - 723	R46723	R40H7133	NR	R40H2534	R40H2535

80 - 1.67 Ratio

405 - Rotor Only

MERITOR DRUM OR ROTOR NO.	CALIPER OR CYLINDER BORE SIZE	MERITOR CALIPER OR WHEEL CYLINDER (LEFT)	MERITOR CALIPER OR WHEEL CYLINDER (RIGHT)	MERITOR CALIPER OR WHEEL CYLINDER REPAIR KIT	MERITOR CALIPER PISTON	MERITOR MASTER CYLINDER	MERITOR MASTER CYLINDER KIT	MERITOR BRAKE HOSE (LEFT)	MERITOR BRAKE HOSE (RIGHT)
									DODGE(Cont.)
									800 SERIES(Cont.)
-	1-1/4 "	R4133582	R4133581	R4166923	NR	-	-	-	-
									900 SERIES
-	1-1/4 "	R4133582	R4133581	R4166923	NR	-	-	-	-
-	1-5/8 "	R4133338	R4133338	R4166689	NR	-	-	-	-
-	1-5/8 "	R4133338	R4133338	R4166689	NR	-	-	-	-
-	1-1/8 "	R4133714	R4133715	R4166926	NR	-	-	-	-
-	1-1/4 "	R4133582	R4133581	R4166923	NR	-	-	-	-
-	1-1/4 "	R4133582	R4133581	R4166923	NR	-	-	-	-
-	1-5/8 "	R4133338	R4133338	R4166689	NR	-	-	-	-
-	1-5/8 "	R4133338	R4133338	R4166689	NR	-	-	-	-
-	1-1/8 "	R4133714	R4133715	R4166926	NR	-	-	-	-
-	1-1/4 "	R4133582	R4133581	R4166923	NR	-	-	-	-
-	1-1/4 "	R4133582	R4133581	R4166923	NR	-	-	-	-
-	1-5/8 "	R4133338	R4133338	R4166689	NR	-	-	-	-
-	1-5/8 "	R4133338	R4133338	R4166689	NR	-	-	-	-
-	1-1/8 "	R4133714	R4133715	R4166926	NR	-	-	-	-
-	1-1/4 "	R4133582	R4133581	R4166923	NR	-	-	-	-
-	1-1/4 "	R4133582	R4133581	R4166923	NR	-	-	-	-
-	1-5/8 "	R4133338	R4133338	R4166689	NR	-	-	-	-
-	1-5/8 "	R4133338	R4133338	R4166689	NR	-	-	-	-
-	1-1/8 "	R4133714	R4133715	R4166926	NR	-	-	-	-
-	1-1/4 "	R4133582	R4133581	R4166923	NR	-	-	-	-
-	1-1/4 "	R4133582	R4133581	R4166923	NR	-	-	-	-
-	1-5/8 "	R4133338	R4133338	R4166689	NR	-	-	-	-
-	1-5/8 "	R4133338	R4133338	R4166689	NR	-	-	-	-
-	1-1/8 "	R4133714	R4133715	R4166926	NR	-	-	-	-
-	1-1/4 "	R4133582	R4133581	R4166923	NR	-	-	-	-
									B200, B250 SERIES VAN - 3/4 TON
R44140716	1 "	R4133004	R4133005	R4133484	-	-	-	-	-
R44145202	56mm	R4255888	R4255887	R4012094	R4012093	R4113488	-	R4578874	R4578873
R44140716	1 "	R4133004	R4133005	R4133484	-	-	-	-	-
R44145202	56mm	R4255888	R4255887	R4012094	R4012093	R4113488	-	R4578874	R4578873
R44140716	1 "	R4133004	R4133005	R4133484	-	-	-	-	-
R44141922[405]	56mm	R4255888	R4255887	R4012094	R4012093	R4113488	-	R4578872	R4578873
R44145202	56mm	R4255888	R4255887	R4012094	R4012093	R4113488	-	R4578874	R4578873
R44140716	1 "	R4133004	R4133005	R4133484	-	-	-	-	-
R44141922[405]	56mm	R4255888	R4255887	R4012094	R4012093	R4113488	-	R4578872	R4578873
R44145202	56mm	R4255888	R4255887	R4012094	R4012093	R4113488	-	R4578874	R4578873
R44140724	1 "	R4133004	R4133005	R4133484	-	-	-	-	-
R44140716	1 "	R4133004	R4133005	R4133484	-	-	-	-	-
R44141922[405]	56mm	R4255888	R4255887	R4012094	R4012093	R4113488	-	R4578872	R4578873
R44145202	56mm	R4255888	R4255887	R4012094	R4012093	R4113488	-	R4578874	R4578873
R44140724	15/16 "	R4133597	R4133597	R4166852	NR	-	-	-	-

MAKE MODEL YEAR AXLE CODE AXLE WEIGHT	AXLE & BRK. TYPE	BRK. MFG.	BRAKE SIZE	FMSI	MERITOR DISC PAD OR BRAKE SHOE	MERITOR GUIDE PIN OR RETURN SPRING KIT	MERITOR CALIPER HWD. KIT OR RETURN SPRING KIT	MERITOR ADJUSTER KIT (LEFT WHEEL)	MERITOR ADJUSTER KIT (RIGHT WHEEL)
DODGE(Cont.)									
B200, B250 SERIES VAN - 3/4 TON(Cont.)									
1998 9.25 HD Chrysler Rear Axle	Ra		12.125 x 3-1/2 "	2171T - 583	R468140	R40H608	R40H7299	R40H2598	R40H2599
All Wheel Antilock Brakes 3300 lb	Fd	KH		7536 - D655	MD655	R40H5735	R4011133	NR	NR
Rear Wheel Antilock Brakes 4000 lb	Fd	KH		7536 - D655	MD655	R40H5735	R4011133	NR	NR
Dana 60 Rear Axle 5500 lb	Ra		12.125 x 3-1/2 "	2171T - 583	R468140	R40H608	R40H7299	R40H2598	R40H2599
B200, B250, PB200, PB250 SERIES VAN - 3/4 TON									
1997	Ra	BX	12 " x 2-1/2 "	2146AT - 357	R46357	R40H547	R40H4087	R40H2598	R40H2599
All Wheel Antilock Brakes	Fd	KH		7179 - D269	MD269	NR	R40H5516	NR	NR
Rear Wheel Antilock Brakes	Fd	KH		7179 - D269	MD269	NR	R40H5516	NR	NR
1996	Ra	BX	12 " x 2-1/2 "	2146AT - 357	R46357	R40H547	R40H4087	R40H2598	R40H2599
All Wheel Antilock Brakes	Fd	KH		7179 - D269	MD269	NR	R40H5516	NR	NR
Rear Wheel Antilock Brakes	Fd	KH		7179 - D269	MD269	NR	R40H5516	NR	NR
1995	Ra	BX	12 " x 2-1/2 "	2146AT - 357	R46357	R40H547	R40H4087	R40H2598	R40H2599
All Wheel Antilock Brakes	Fd	KH		7179 - D269	MD269	NR	R40H5516	NR	NR
Rear Wheel Antilock Brakes	Fd	KH		7179 - D269	MD269	NR	R40H5516	NR	NR
1994	Ra	BX	12 " x 2-1/2 "	2146AT - 357	R46357	R40H547	R40H4087	R40H2598	R40H2599
All Wheel Antilock Brakes	Fd	KH		7179 - D269	MD269	NR	R40H5516	NR	NR
Rear Wheel Antilock Brakes	Fd	KH		7179 - D269	MD269	NR	R40H5516	NR	NR
1993	Fd	KH		7179 - D269	MD269	NR	R40H5516	NR	NR
	Ra	BX	11 " x 2-1/2 "	2025T - 446	R46446	R40H111	R40H7133	R40H2534	R40H2535
1992	Fd	KH		7179 - D269	MD269	NR	R40H5516	NR	NR
	Ra	BX	11 " x 2-1/2 "	2025T - 446	R46446	R40H111	R40H7133	R40H2534	R40H2535
1991	Fd	KH		7179 - D269	MD269	NR	R40H5516	NR	NR
	Ra	BX	11 " x 2-1/2 "	2025T - 446	R46446	R40H111	R40H7133	R40H2534	R40H2535
1990	Fd	KH		7179 - D269	MD269	NR	R40H5516	NR	NR
	Ra	BX	11 " x 2-1/2 "	2025T - 446	R46446	R40H111	R40H7133	R40H2534	R40H2535
1989	Fd	KH		7179 - D269	MD269	NR	R40H5516	NR	NR
	Ra	BX	11 " x 2-1/2 "	2025T - 446	R46446	R40H111	R40H7133	R40H2534	R40H2535
1988	Fd	KH		7179 - D269	MD269	NR	R40H5516	NR	NR
	Ra	BX	11 " x 2-1/2 "	2025T - 446	R46446	R40H111	R40H7133	R40H2534	R40H2535
1987	Fd	KH		7179 - D269	MD269	NR	R40H5516	NR	NR
	Ra	BX	11 " x 2-1/2 "	2025T - 446	R46446	R40H111	R40H7133	R40H2534	R40H2535
1986	Fd	KH		7179 - D269	MD269	NR	R40H5516	NR	NR
	Ra	BX	11 " x 2-1/2 "	2025T - 446	R46446	R40H111	R40H7133	R40H2534	R40H2535
1985	Fd	KH		7179 - D269	MD269	NR	R40H5516	NR	NR
	Ra	BX	11 " x 2-1/2 "	2025T - 446	R46446	R40H111	R40H7133	R40H2534	R40H2535
1984	Fd	KH		7179 - D269	MD269	NR	R40H5516	NR	NR
	Ra	BX	11 " x 2-1/2 "	2025T - 446	R46446	R40H111	R40H7133	R40H2534	R40H2535
1983	Ra	BX	10 " x 2-1/2 "	2089T - 445	R46445	R40H102	R40H7044	R40H2528	R40H2529
3,300 lb.	Fd	CH		7019 - D86	MD269	NR	R40H5516	NR	NR
1982	Ra	BX	10 " x 2-1/2 "	2089T - 445	R46445	R40H102	R40H7044	R40H2528	R40H2529
Except 3300 lb.	Fd	CH		7019 - D86	MD269	NR	R40H5516	NR	NR
3,300 lb.	Fd	CH		7019 - D86	MD269	NR	R40H5516	NR	NR
1981	Ra	BX	10 " x 2-1/2 "	2089T - 445	R46445	R40H102	R40H7044	R40H2528	R40H2529

53 - Power Brakes
82 - 5 Stud Rotor
118 - Gasoline Engine, Power Brakes, Plastic Reservior
78 - Finned Drum
83 - 5" Bolt Circle
405 - Rotor Only
79 - Inboard Mounting
84 - 9 1/4" Ring Gear, Heavy Duty Axle

MERITOR DRUM OR ROTOR NO.	CALIPER OR CYLINDER BORE SIZE	MERITOR CALIPER OR WHEEL CYLINDER (LEFT)	MERITOR CALIPER OR WHEEL CYLINDER (RIGHT)	MERITOR CALIPER OR WHEEL CYLINDER REPAIR KIT	MERITOR CALIPER PISTON	MERITOR MASTER CYLINDER	MERITOR MASTER CYLINDER KIT	MERITOR BRAKE HOSE (LEFT)	MERITOR BRAKE HOSE (RIGHT)
DODGE(Cont.)									
B200, B250 SERIES VAN - 3/4 TON(Cont.)									
R44140685[84]	15/16 "	R4133597	R4133597	R4166852	NR	-	-	-	-
R44141922[405]	56mm	R4255888	R4255887	R4012094	R4012093	R4113488	-	R4578872	R4578873
R44145202	56mm	R4255888	R4255887	R4012094	R4012093	R4113488	-	R4578874	R4578873
R44140267[79]	15/16 "	R4133597	R4133597	R4166852	NR	-	-	-	-
B200, B250, PB200, PB250 SERIES VAN - 3/4 TON									
R44140267[79]	7/8 "	R4133627	R4133628	R4166820	NR	-	-	R4577914	R4577914
R44141922[405]	3-3/32 "	R42R55119	R42R55118	R4066587	R4090018P	R4112519[53]	N/A	R4578136	R4577317
R44141381[82]	3-3/32 "	R42R55119	R42R55118	R4066587	R4090018P	R4112519[53]	N/A	R4578137	R4577317
R44140267[79]	7/8 "	R4133627	R4133628	R4166820	NR	-	-	R4577914	R4577914
R44141922[405]	3-3/32 "	R42R55119	R42R55118	R4066587	R4090018P	R4112519[53]	N/A	R4578136	R4577317
R44141381[82]	3-3/32 "	R42R55119	R42R55118	R4066587	R4090018P	R4112519[53]	N/A	R4578137	R4577317
R44140267[79]	7/8 "	R4133627	R4133628	R4166820	NR	-	-	R4577914	R4577914
R44141922[405]	3-3/32 "	R42R55119	R42R55118	R4066587	R4090018P	R4112519[53]	N/A	R4578136	R4577317
R44141381[82]	3-3/32 "	R42R55119	R42R55118	R4066587	R4090018P	R4112519[53]	N/A	R4578137	R4577317
R44140267[79]	7/8 "	R4133627	R4133628	R4166820	NR	-	-	R4577914	R4577914
R44141922[405]	3-3/32 "	R42R55119	R42R55118	R4066587	R4090018P	R4112519[53]	N/A	R4578136	R4577317
R44141381[82]	3-3/32 "	R42R55119	R42R55118	R4066587	R4090018P	R4112519[53]	N/A	R4578137	R4577317
R44141381[82]	3-3/32 "	R42R55119	R42R55118	R4066587	R4090018P	R4112519[53]	N/A	R4577909	R4577317
R441404090[83]	15/16 "	R4133597	R4133597	R4166852	NR	-	-	R4577914	R4577914
R44141381[82]	3-3/32 "	R42R55119	R42R55118	R4066587	R4090018P	R4111860[118]	R4122388	R4577909	R4577317
R441404090[83]	15/16 "	R4133597	R4133597	R4166852	NR	-	-	R4577914	R4577914
R44141381[82]	3-3/32 "	R42R55119	R42R55118	R4066587	R4090018P	R4111860[118]	R4122388	R4577909	R4577317
R441404090[83]	15/16 "	R4133597	R4133597	R4166852	NR	-	-	R4577914	R4577914
R44141381[82]	3-3/32 "	R42R55119	R42R55118	R4066587	R4090018P	R4111860[118]	R4122388	R4577909	R4577317
R441404090[83]	15/16 "	R4133597	R4133597	R4166852	NR	-	-	R4577914	R4577914
R44141381[82]	3-3/32 "	R42R55119	R42R55118	R4066587	R4090018P	R4111860[118]	R4122388	R4577909	R4577317
R441404090[83]	15/16 "	R4133597	R4133597	R4166852	NR	-	-	R4577914	R4577914
R44141381[82]	3-3/32 "	R42R55119	R42R55118	R4066587	R4090018P	R4111860[118]	R4122388	R4577909	R4577317
R441404090[83]	15/16 "	R4133597	R4133597	R4166852	NR	-	-	R4577914	R4577914
R44141381[82]	3-3/32 "	R42R55119	R42R55118	R4066587	R4090018P	R4111860[118]	R4122388	R4577909	R4577317
R441404090[83]	15/16 "	R4133597	R4133597	R4166852	NR	-	-	R4577914	R4577914
R44140566[78]	15/16 "	R4133597	R4133597	R4166852	NR	-	-	R4577914	R4577914
R44141146[82]	3-3/32 "	R42R55119	R42R55118	R4066587	R4090018P	R4111860[118]	R4122388	R4577909	R4577317
R44140566[78]	15/16 "	R4133597	R4133597	R4166852	NR	-	-	-	-
R44141072	3-3/32 "	R42R55119	R42R55118	R4066587	R4090018P	R4111860[118]	R4122388	-	-
R44141146[82]	3-3/32 "	R42R55119	R42R55118	R4066587	R4090018P	R4111860[118]	R4122388	-	-
R44140566[78]	15/16 "	R4133597	R4133597	R4166852	NR	-	-	R4577315	R4577315

MAKE MODEL YEAR AXLE CODE AXLE WEIGHT	AXLE & BRK. TYPE	BRK. MFG.	BRAKE SIZE	FMSI	MERITOR DISC PAD OR BRAKE SHOE	MERITOR GUIDE PIN OR RETURN SPRING KIT	MERITOR CALIPER HWD. KIT OR RETURN SPRING KIT	MERITOR ADJUSTER KIT (LEFT WHEEL)	MERITOR ADJUSTER KIT (RIGHT WHEEL)
DODGE(Cont.)									
B200, B250, PB200, PB250 SERIES VAN - 3/4 TON(Cont.)									
1981									
Except 3300 lb.	Fd	CH		7019 - D86	MD269	NR	R40H5516	NR	NR
	Fd	CH		7019 - D86	MD269	NR	R40H5516	NR	NR
3,300 lb.	Fd	CH		7019 - D86	MD269	NR	R40H5516	NR	NR
	Fd	CH		7019 - D86	MD269	NR	R40H5516	NR	NR
1980									
	Ra	BX	10 " x 2-1/2 "	2089T - 445	R46445	R40H102	R40H7044	R40H2528	R40H2529
	Ra	BX	11 " x 2-1/2 "	2025T - 446	R46446	R40H111	R40H7133	R40H2534	R40H2535
Except 3300 lb.	Fd	CH		7019 - D86	MD269	NR	R40H5516	NR	NR
3,300 lb.	Fd	CH		7019 - D86	MD269	NR	R40H5516	NR	NR
1979									
	Fd	CH		7019 - D86	MD269	NR	R40H5516	NR	NR
	Fd	CH		7019 - D86	MD269	NR	R40H5516	NR	NR
	Ra	BX	10 " x 2-1/2 "	2089T - 445	R46445	R40H102	R40H7044	R40H2528	R40H2529
	Ra	BX	11 " x 2-1/2 "	2025T - 446	R46446	R40H111	R40H7133	R40H2534	R40H2535
1978									
	Ra	BX	10 " x 2-1/2 "	2089T - 445	R46445	R40H102	R40H7044	R40H2528	R40H2529
	Ra	BX	11 " x 2-1/2 "	2025T - 446	R46446	R40H111	R40H7133	R40H2534	R40H2535
1977									
	Fd	CH		7019 - D86	MD269	NR	R40H5516	NR	NR
	Ra	BX	10 " x 2-1/2 "	2089T - 445	R46445	R40H102	R40H7044	R40H2528	R40H2529
	Ra	BX	11 " x 2-1/2 "	2025T - 446	R46446	R40H111	R40H7133	R40H2534	R40H2535
1976									
	Fd	CH		7019 - D86	MD269	NR	R40H5516	NR	NR
	Ra	BX	10 " x 2-1/2 "	2089T - 445	R46445	R40H102	R40H7044	R40H2528	R40H2529
	Ra	BX	11 " x 2-1/2 "	2025T - 446	R46446	R40H111	R40H7133	R40H2534	R40H2535
1975									
	Fd	CH		7019 - D86	MD269	NR	R40H5516	NR	NR
	Ra	BX	10 " x 2-1/2 "	2089T - 445	R46445	R40H102	R40H7044	R40H2528	R40H2529
	Ra	BX	11 " x 2-1/2 "	2025T - 446	R46446	R40H111	R40H7133	R40H2534	R40H2535
1974									
	Fd	CH		7019 - D86	MD269	NR	R40H5516	NR	NR
	Ra	CH	11 " x 2-1/2 "	2025T - 335	N/A	R40H102	R40H7044	R40H2528	R40H2529
	Ra	CH	11 " x 2-1/2 "	2025T - 335	N/A	R40H111	R40H7133	R40H2534	R40H2535
1973									
	Fd	CH		7019 - D86	MD269	NR	R40H5516	NR	NR
	Ra	BX	10 " x 2-1/2 "	2089T - 445	R46445	R40H102	R40H7044	R40H2528	R40H2529
	Ra	BX	11 " x 2-1/2 "	2025T - 446	R46446	R40H111	R40H7133	R40H2534	R40H2535
1972									
	Fa	KH	11 " x 3 "	2055T - 336	N/A	R40H111	-	R40H2534	R40H2535
	Fd	KH		781 - D39	NLA	NLA	R407991	NR	NR
	Ra	BX	10 " x 2-1/2 "	2089T - 333	N/A	R40H366	R40H4030DP	R40H2528	R40H2529
1971									
	Fa	KH	11 " x 3 "	2055T - 336	N/A	R40H111	-	R40H2534	R40H2535
	Fd	KH		781 - D39	NLA	NLA	R407991	NR	NR
	Ra	BX	10 " x 2-1/2 "	2089T - 333	N/A	R40H366	R40H4030DP	R40H2528	R40H2529
B300, B350, PB300 SERIES VAN - 1TON									
2003									
	Ra		12.125 x 3-1/2 "	2171T - 583	R468140	R40H7299	NR	R40H2598	R40H2599
All Wheel Antilock Brakes									
3300 lb	Fd	KH		7536 - D655	MD655	R40H5735	R4011133	NR	NR
Rear Wheel Antilock Brakes									
4000 lb	Fd	KH		7536 - D655	MD655	R40H5735	R4011133	NR	NR
2002									
	Ra		12.125 x 3-1/2 "	2171T - 583	R468140	R40H7299	NR	R40H2598	R40H2599
All Wheel Antilock Brakes									
3300 lb	Fd	KH		7536 - D655	MD655	R40H5735	R4011133	NR	NR
Rear Wheel Antilock Brakes									
4000 lb	Fd	KH		7536 - D655	MD655	R40H5735	R4011133	NR	NR
2001									
	Ra		12.125 x 3-1/2 "	2171T - 583	R468140	R40H7299	NR	R40H2598	R40H2599
All Wheel Antilock Brakes									
3300 lb	Fd	KH		7536 - D655	MD655	R40H5735	R4011133	NR	NR

78 - Finned Drum
82 - 5 Stud Rotor
114 - Power Brakes, Except Plastic Reservior
118 - Gasoline Engine, Power Brakes, Plastic Reservior
405 - Rotor Only

MERITOR DRUM OR ROTOR NO.	CALIPER OR CYLINDER BORE SIZE	MERITOR CALIPER OR WHEEL CYLINDER (LEFT)	MERITOR CALIPER OR WHEEL CYLINDER (RIGHT)	MERITOR CALIPER OR WHEEL CYLINDER REPAIR KIT	MERITOR CALIPER PISTON	MERITOR MASTER CYLINDER	MERITOR MASTER CYLINDER KIT	MERITOR BRAKE HOSE (LEFT)	MERITOR BRAKE HOSE (RIGHT)
									DODGE(Cont.)
									B200, B250, PB200, PB250 SERIES VAN - 3/4 TON(Cont.)
R44141072	3-3/32 "	R42R55119	R42R55118	R4066587	R4090018P	R4111860[118]	R4122388	R4577173	R4577172
R44141072	3-3/32 "	R42R55119	R42R55118	R4066587	R4090018P	R4111633[114]	R4122706	R4577173	R4577172
R44141146[82]	3-3/32 "	R42R55119	R42R55118	R4066587	R4090018P	R4111633[114]	R4122706	R4577173	R4577172
R44141146[82]	3-3/32 "	R42R55119	R42R55118	R4066587	R4090018P	R4111860[118]	R4122388	R4577173	R4577172
R44140566[78]	15/16 "	R4133597	R4133597	R4166852	NR	-	-	R4577167	R4577167
R44140365	15/16 "	R4133597	R4133597	R4166852	NR	-	-	R4577167	R4577167
R44141072	3-3/32 "	R42R55119	R42R55118	R4066587	R4090018P	R4111633[114]	R4122706	R4577173	R4577172
R44141146[82]	3-3/32 "	R42R55119	R42R55118	R4066587	R4090018P	R4111860[118]	R4122388	R4577173	R4577172
N/A	3-3/32 "	R42R55119	R42R55118	R4066587	R4090018P	R4111633[114]	R4122706	R4577173	R4577172
N/A	3-3/32 "	R42R55119	R42R55118	R4066587	R4090018P	R4111860[118]	R4122388	-	-
N/A		-	-	N/A	NR	-	-	-	-
R44140365		-	-	N/A	NR	-	-	-	-
N/A		-	-	N/A	NR	-	-	-	-
R44140365		-	-	N/A	NR	-	-	-	-
-	3-3/32 "	R42R55117	R42R55116	R4066587	R4090018S	-	-	-	-
-		-	-	-	NR	-	-	-	-
R44140365		-	-	-	NR	-	-	-	-
-	3-3/32 "	R42R55117	R42R55116	R4066587	R4090018S	-	-	-	-
-		-	-	-	NR	-	-	-	-
R44140365		-	-	-	NR	-	-	-	-
-	3-3/32 "	R42R55117	R42R55116	R4066587	R4090018S	-	-	-	-
-		-	-	-	NR	-	-	-	-
R44140365		-	-	-	NR	-	-	-	-
-	3-3/32 "	R42R55117	R42R55116	R4066587	R4090018S	-	-	-	-
-		-	-	-	NR	-	-	-	-
R44140365	15/16 "	R4133597	R4133597	-	NR	-	-	-	-
-	3-3/32 "	R42R55117	R42R55116	R4066587	R4090018S	-	-	-	-
-		-	-	-	NR	-	-	-	-
R44140365		-	-	-	NR	-	-	-	-
-		-	-	-	-	-	-	-	-
-		-	-	R4066851	R4090015S	-	-	-	-
-		-	-	-	NR	-	-	-	-
-		-	-	-	-	-	-	-	-
-		-	-	R4066851	R4090015S	-	-	-	-
-		-	-	-	NR	-	-	-	-
									B300, B350, PB300 SERIES VAN - 1TON
R44140716	1 "	R4133004	R4133005	R4133484	-	-	-	-	-
R44141922[405]	56mm	R4255888	R4255887	R4012094	R4012093	R4113488	-	R4578872	R4578873
R44145202	56mm	R4255888	R4255887	R4012094	R4012093	R4113488	-	R4578874	R4578873
R44140716	1 "	R4133004	R4133005	R4133484	-	-	-	-	-
R44141922[405]	56mm	R4255888	R4255887	R4012094	R4012093	R4113488	-	R4578872	R4578873
R44145202	56mm	R4255888	R4255887	R4012094	R4012093	R4113488	-	R4578874	R4578873
R44140716	1 "	R4133004	R4133005	R4133484	-	-	-	-	-
R44141922[405]	56mm	R4255888	R4255887	R4012094	R4012093	R4113488	-	R4578872	R4578873

MAKE MODEL YEAR AXLE CODE AXLE WEIGHT	AXLE & BRK. TYPE	BRK. MFG.	BRAKE SIZE	FMSI	MERITOR DISC PAD OR BRAKE SHOE	MERITOR GUIDE PIN OR RETURN SPRING KIT	MERITOR CALIPER HWD. KIT OR RETURN SPRING KIT	MERITOR ADJUSTER KIT (LEFT WHEEL)	MERITOR ADJUSTER KIT (RIGHT WHEEL)
DODGE(Cont.)									
B300, B350, PB300 SERIES VAN - 1TON(Cont.)									
2001 Rear Wheel Antilock Brakes 4000 lb	Fd	KH		7536 - D655	MD655	R40H5735	R4011133	NR	NR
2000	Ra		12.125 x 3-1/2 "	2171T - 583	R468140	R40H7299	NR	R40H2598	R40H2599
All Wheel Antilock Brakes 3300 lb	Fd	KH		7536 - D655	MD655	R40H5735	R4011133	NR	NR
Rear Wheel Antilock Brakes 4000 lb	Fd	KH		7536 - D655	MD655	R40H5735	R4011133	NR	NR
1999	Ra		11 " x 2-1/4 "	2182TT - 723	R46723	R40H7133	NR	R40H2534	R40H2535
	Ra		12.125 x 3-1/2 "	2171T - 583	R468140	R40H7299	NR	R40H2598	R40H2599
All Wheel Antilock Brakes 3300 lb	Fd	KH		7536 - D655	MD655	R40H5735	R4011133	NR	NR
Rear Wheel Antilock Brakes 4000 lb	Fd	KH		7536 - D655	MD655	R40H5735	R4011133	NR	NR
1998	Ra		12.125 x 3-1/2 "	2171T - 583	R468140	R40H7299	NR	R40H2598	R40H2599
	Ra		12.125 x 3-1/2 "	2171T - 583	R468140	R40H7299	NR	R40H2598	R40H2599
All Wheel Antilock Brakes 3300 lb	Fd	KH		7536 - D655	MD655	R40H5735	R4011133	NR	NR
Rear Wheel Antilock Brakes 4000 lb	Fd	KH		7536 - D655	MD655	R40H5735	R4011133	NR	NR
B300, B350, PB300, PB350 SERIES VAN - 1TON									
1997	Ra		12 " x 3 "	2140T - 314	R46358	R40H547	R40H4087	R40H2598	R40H2599
	Ra	BX	12 " x 2-1/2 "	2146AT - 316	R46357	R40H547	R40H4087	R40H2598	R40H2599
	Ra	BX	12 " x 2-1/2 "	2146AT - 316	R46357	R40H547	R40H4087	R40H2598	R40H2599
	Ra	BX	12 " x 2-1/2 "	2146AT - 316	R46357	R40H547	R40H4087	R40H2598	R40H2599
	Ra	BX	12 " x 2-1/2 "	2146AT - 316	R46357	R40H547	R40H4087	R40H2598	R40H2599
All Wheel Antilock Brakes 3,600 lb.	Fd	KH		7179 - D269	MD269	NR	R40H5516	NR	NR
Rear Wheel Antilock Brakes 3,600 lb.	Fd	KH		7179 - D269	MD269	NR	R40H5516	NR	NR
All Wheel Antilock Brakes 4,000 lb.	Fd	KH		7179 - D269	MD269	NR	R40H5516	NR	NR
Rear Wheel Antilock Brakes 4,000 lb.	Fd	KH		7179 - D269	MD269	NR	R40H5516	NR	NR
5,500 lb.	Ra	BX	12 " x 2-1/2 "	2146AT - 316	R46357	R40H547	R40H4087	R40H2598	R40H2599
	Ra	BX	12 " x 2-1/2 "	2146AT - 316	R46357	R40H547	R40H4087	R40H2598	R40H2599
6200 lb.	Ra		12 " x 3 "	2140T - 314	R46358	R40H547	R40H4087	R40H2598	R40H2599
1996	Ra		12 " x 3 "	2140T - 314	R46358	R40H547	R40H4087	R40H2598	R40H2599
	Ra	BX	12 " x 2-1/2 "	2146AT - 316	R46357	R40H547	R40H4087	R40H2598	R40H2599
	Ra	BX	12 " x 2-1/2 "	2146AT - 316	R46357	R40H547	R40H4087	R40H2598	R40H2599
	Ra	BX	12 " x 2-1/2 "	2146AT - 316	R46357	R40H547	R40H4087	R40H2598	R40H2599
	Ra	BX	12 " x 2-1/2 "	2146AT - 316	R46357	R40H547	R40H4087	R40H2598	R40H2599
All Wheel Antilock Brakes 3,600 lb.	Fd	KH		7179 - D269	MD269	NR	R40H5516	NR	NR
Rear Wheel Antilock Brakes 3,600 lb.	Fd	KH		7179 - D269	MD269	NR	R40H5516	NR	NR
All Wheel Antilock Brakes 4,000 lb.	Fd	KH		7179 - D269	MD269	NR	R40H5516	NR	NR
Rear Wheel Antilock Brakes 4,000 lb.	Fd	KH		7179 - D269	MD269	NR	R40H5516	NR	NR
5,500 lb.	Ra	BX	12 " x 2-1/2 "	2146AT - 316	R46357	R40H547	R40H4087	R40H2598	R40H2599
	Ra	BX	12 " x 2-1/2 "	2146AT - 316	R46357	R40H547	R40H4087	R40H2598	R40H2599
6200 lb.	Ra		12 " x 3 "	2140T - 314	R46358	R40H547	R40H4087	R40H2598	R40H2599
1995	Ra		12 " x 3 "	2140T - 314	R46358	R40H547	R40H4087	R40H2598	R40H2599
	Ra	BX	12 " x 2-1/2 "	2146AT - 316	R46357	R40H547	R40H4087	R40H2598	R40H2599
	Ra	BX	12 " x 2-1/2 "	2146AT - 316	R46357	R40H547	R40H4087	R40H2598	R40H2599
	Ra	BX	12 " x 2-1/2 "	2146AT - 316	R46357	R40H547	R40H4087	R40H2598	R40H2599
	Ra	BX	12 " x 2-1/2 "	2146AT - 316	R46357	R40H547	R40H4087	R40H2598	R40H2599

45 – R44141382 is a hub & rotor, for rotor only use R44141193
84 - 9 1/4" Ring Gear, Heavy Duty Axle
89 - Rotor Only with 1/2" Studs
53 - Power Brakes
86 - Dana 60 Axle, Stamped 591 or 2339307, Outboard Mount
333 - Except 9 1/4" Ring Gear
79 - Inboard Mounting
87 - Dana 60 Axle, Stamped 593 or 2339303, Outboard Mount
381 - Rotor and Hub One Piece Assembly W/O ABS Ring

MERITOR DRUM OR ROTOR NO.	CALIPER OR CYLINDER BORE SIZE	MERITOR CALIPER OR WHEEL CYLINDER (LEFT)	MERITOR CALIPER OR WHEEL CYLINDER (RIGHT)	MERITOR CALIPER OR WHEEL CYLINDER REPAIR KIT	MERITOR CALIPER PISTON	MERITOR MASTER CYLINDER	MERITOR MASTER CYLINDER KIT	MERITOR BRAKE HOSE (LEFT)	MERITOR BRAKE HOSE (RIGHT)
									DODGE(Cont.)
									B300, B350, PB300 SERIES VAN - 1TON(Cont.)
R44145202	56mm	R4255888	R4255887	R4012094	R4012093	R4113488	-	R4578874	R4578873
R44140716	1 "	R4133004	R4133005	R4133484	-	-	-	-	-
R44141922[405]	56mm	R4255888	R4255887	R4012094	R4012093	R4113488	-	R4578872	R4578873
R44145202	56mm	R4255888	R4255887	R4012094	R4012093	R4113488	-	R4578874	R4578873
- R44140716		- -	- -	- -	- -	- -	- -	- -	- -
R44141922[405]	56mm	R4255888	R4255887	R4012094	R4012093	R4113488	-	R4578872	R4578873
R44145202	56mm	R4255888	R4255887	R4012094	R4012093	R4113488	-	R4578874	R4578873
R44140716 R44140716	7/8 " 1 "	R4133627 R4133004	R4133628 R4133005	R4166820 R4133484	- -	- -	- -	- -	- -
R44141922[405]	56mm	R4255888	R4255887	R4012094	R4012093	R4113488	-	R4578872	R4578873
R44145202	56mm	R4255888	R4255887	R4012094	R4012093	R4113488	-	R4578874	R4578873
									B300, B350, PB300, PB350 SERIES VAN - 1TON
R44140686[86]	7/8 "	R4133627	R4133628	N/A	NR	-	-	R4577915	R4577915
R44140679[87]	7/8 "	R4133627	R4133628	N/A	NR	-	-	R4577915	R4577915
R44140679[87]	1 "	R4133004	R4133004	R4166822	NR	-	-	R4577915	R4577915
R44140685[84]	7/8 "	R4133627	R4133628	N/A	NR	-	-	R4577915	R4577915
R44140685[84]	1 "	R4133004	R4133004	R4166822	NR	-	-	R4577915	R4577915
R44141924[381]	3-3/32 "	R42R55119	R42R55118	R4066587	R4090018P	R4112519[53]	N/A	R4578136	R4577317
R44141382[45]	3-3/32 "	R42R55119	R42R55118	R4066587	R4090018P	R4112519[53]	N/A	R4578137	R4577317
R44141193[89]	3-3/32 "	R42R55119	R42R55118	R4066587	R4090018P	R4112519[53]	N/A	R4578136	R4577317
R44141193[89]	3-3/32 "	R42R55119	R42R55118	R4066587	R4090018P	R4112519[53]	N/A	R4578137	R4577317
R44140267[79]	7/8 "	R4133627	R4133628	N/A	NR	-	-	R4577915	R4577915
R44140267[79]	1 "	R4133004	R4133004	R4166822	NR	-	-	R4577915	R4577915
R44140264[333]	7/8 "	R4133627	R4133628	N/A	NR	-	-	R4577915	R4577915
R44140686[86]	7/8 "	R4133627	R4133628	N/A	NR	-	-	R4577915	R4577915
R44140679[87]	7/8 "	R4133627	R4133628	N/A	NR	-	-	R4577915	R4577915
R44140685[84]	7/8 "	R4133627	R4133628	N/A	NR	-	-	R4577915	R4577915
R44140685[84]	1 "	R4133004	R4133004	R4166822	NR	-	-	R4577915	R4577915
R44140679[87]	1 "	R4133004	R4133004	R4166822	NR	-	-	R4577915	R4577915
R44141924[381]	3-3/32 "	R42R55119	R42R55118	R4066587	R4090018P	R4112519[53]	N/A	R4578136	R4577317
R44141382[45]	3-3/32 "	R42R55119	R42R55118	R4066587	R4090018P	R4112519[53]	N/A	R4578137	R4577317
R44141193[89]	3-3/32 "	R42R55119	R42R55118	R4066587	R4090018P	R4112519[53]	N/A	R4578136	R4577317
R44141193[89]	3-3/32 "	R42R55119	R42R55118	R4066587	R4090018P	R4112519[53]	N/A	R4578137	R4577317
R44140267[79]	1 "	R4133004	R4133004	R4166822	NR	-	-	R4577915	R4577915
R44140267[79]	7/8 "	R4133627	R4133628	N/A	NR	-	-	R4577915	R4577915
R44140264[333]	7/8 "	R4133627	R4133628	N/A	NR	-	-	R4577915	R4577915
R44140686[86]	7/8 "	R4133627	R4133628	N/A	NR	-	-	R4577915	R4577915
R44140679[87]	7/8 "	R4133627	R4133628	N/A	NR	-	-	R4577915	R4577915
R44140685[84]	1 "	R4133004	R4133004	R4166822	NR	-	-	R4577915	R4577915
R44140685[84]	7/8 "	R4133627	R4133628	N/A	NR	-	-	R4577915	R4577915
R44140679[87]	1 "	R4133004	R4133004	R4166822	NR	-	-	R4577915	R4577915

405 - Rotor Only

MAKE MODEL YEAR AXLE CODE AXLE WEIGHT	AXLE & BRK. TYPE	BRK. MFG.	BRAKE SIZE	FMSI	MERITOR DISC PAD OR BRAKE SHOE	MERITOR GUIDE PIN OR RETURN SPRING KIT	MERITOR CALIPER HWD. KIT OR RETURN SPRING KIT	MERITOR ADJUSTER KIT (LEFT WHEEL)	MERITOR ADJUSTER KIT (RIGHT WHEEL)
DODGE(Cont.)									
B300, B350, PB300, PB350 SERIES VAN - 1TON(Cont.)									
1995									
All Wheel Antilock Brakes									
3,600 lb.	Fd	KH		7179 - D269	MD269	NR	R40H5516	NR	NR
Rear Wheel Antilock Brakes									
3,600 lb.	Fd	KH		7179 - D269	MD269	NR	R40H5516	NR	NR
All Wheel Antilock Brakes									
4,000 lb.	Fd	KH		7179 - D269	MD269	NR	R40H5516	NR	NR
Rear Wheel Antilock Brakes									
4,000 lb.	Fd	KH		7179 - D269	MD269	NR	R40H5516	NR	NR
5,500 lb.	Ra	BX	12 " x 2-1/2 "	2146AT - 316	R46357	R40H547	R40H4087	R40H2598	R40H2599
	Ra	BX	12 " x 2-1/2 "	2146AT - 316	R46357	R40H547	R40H4087	R40H2598	R40H2599
6200 lb.	Ra		12 " x 3 "	2140T - 314	R46358	R40H547	R40H4087	R40H2598	R40H2599
1994									
	Ra		12 " x 3 "	2140T - 314	R46358	R40H547	R40H4087	R40H2598	R40H2599
	Ra	BX	12 " x 2-1/2 "	2146AT - 316	R46357	R40H547	R40H4087	R40H2598	R40H2599
	Ra	BX	12 " x 2-1/2 "	2146AT - 316	R46357	R40H547	R40H4087	R40H2598	R40H2599
	Ra	BX	12 " x 2-1/2 "	2146AT - 316	R46357	R40H547	R40H4087	R40H2598	R40H2599
	Ra	BX	12 " x 2-1/2 "	2146AT - 316	R46357	R40H547	R40H4087	R40H2598	R40H2599
All Wheel Antilock Brakes									
3,600 lb.	Fd	KH		7179 - D269	MD269	NR	R40H5516	NR	NR
Rear Wheel Antilock Brakes									
3,600 lb.	Fd	KH		7179 - D269	MD269	NR	R40H5516	NR	NR
All Wheel Antilock Brakes									
4,000 lb.	Fd	KH		7179 - D269	MD269	NR	R40H5516	NR	NR
Rear Wheel Antilock Brakes									
4,000 lb.	Fd	KH		7179 - D269	MD269	NR	R40H5516	NR	NR
5,500 lb.	Ra	BX	12 " x 2-1/2 "	2146AT - 316	R46357	R40H547	R40H4087	R40H2598	R40H2599
	Ra	BX	12 " x 2-1/2 "	2146AT - 316	R46357	R40H547	R40H4087	R40H2598	R40H2599
6200 lb.	Ra		12 " x 3 "	2140T - 314	R46358	R40H547	R40H4087	R40H2598	R40H2599
1993									
	Ra	BX	12 " x 2-1/2 "	2146AT - 357	R46357	R40H547	R40H4087	R40H2598	R40H2599
	Ra	BX	12 " x 3 "	2140AT - 358	R46358	R40H547	R40H4087	R40H2598	R40H2599
3,600 lb.	Fd	KH		7179 - D269	MD269	NR	R40H5516	NR	NR
4,000 lb.	Fd	KH		7179 - D269	MD269	NR	R40H5516	NR	NR
	Fd	KH		7179 - D269	MD269	NR	R40H5516	NR	NR
5,000 lb.	Ra	BX	12 " x 2-1/2 "	2146AT - 357	R46357	R40H547	R40H4087	R40H2598	R40H2599
	Ra	BX	12 " x 2-1/2 "	2146AT - 357	R46357	R40H547	R40H4087	R40H2598	R40H2599
6200 lb.	Ra	BX	12 " x 2-1/2 "	2146AT - 357	R46357	R40H547	R40H4087	R40H2598	R40H2599
	Ra	BX	12 " x 3 "	2140AT - 358	R46358	R40H547	R40H4087	R40H2598	R40H2599
1992									
	Ra	BX	12 " x 2-1/2 "	2146AT - 357	R46357	R40H547	R40H4087	R40H2598	R40H2599
	Ra	BX	12 " x 3 "	2140AT - 358	R46358	R40H547	R40H4087	R40H2598	R40H2599
3,600 lb.	Fd	KH		7179 - D269	MD269	NR	R40H5516	NR	NR
4,000 lb.	Fd	KH		7179 - D269	MD269	NR	R40H5516	NR	NR
	Fd	KH		7179 - D269	MD269	NR	R40H5516	NR	NR
5,000 lb.	Ra	BX	12 " x 2-1/2 "	2146AT - 357	R46357	R40H547	R40H4087	R40H2598	R40H2599
	Ra	BX	12 " x 2-1/2 "	2146AT - 357	R46357	R40H547	R40H4087	R40H2598	R40H2599
6200 lb.	Ra	BX	12 " x 2-1/2 "	2146AT - 357	R46357	R40H547	R40H4087	R40H2598	R40H2599
	Ra	BX	12 " x 3 "	2140AT - 358	R46358	R40H547	R40H4087	R40H2598	R40H2599
1991									
	Ra	BX	12 " x 2-1/2 "	2146AT - 357	R46357	R40H547	R40H4087	R40H2598	R40H2599
	Ra	BX	12 " x 3 "	2140AT - 358	R46358	R40H547	R40H4087	R40H2598	R40H2599
3,600 lb.	Fd	KH		7179 - D269	MD269	NR	R40H5516	NR	NR
4,000 lb.	Fd	KH		7179 - D269	MD269	NR	R40H5516	NR	NR
	Fd	KH		7179 - D269	MD269	NR	R40H5516	NR	NR
5,500 lb.	Ra	BX	12 " x 2-1/2 "	2146AT - 357	R46357	R40H547	R40H4087	R40H2598	R40H2599
	Ra	BX	12 " x 2-1/2 "	2146AT - 357	R46357	R40H547	R40H4087	R40H2598	R40H2599
6200 lb.	Ra	BX	12 " x 2-1/2 "	2146AT - 357	R46357	R40H547	R40H4087	R40H2598	R40H2599
	Ra	BX	12 " x 3 "	2140AT - 358	R46358	R40H547	R40H4087	R40H2598	R40H2599
1990									
	Ra	BX	12 " x 2-1/2 "	2146AT - 357	R46357	R40H547	R40H4087	R40H2598	R40H2599
	Ra	BX	12 " x 3 "	2140AT - 358	R46358	R40H547	R40H4087	R40H2598	R40H2599
3,600 lb.	Fd	KH		7179 - D269	MD269	NR	R40H5516	NR	NR
4,000 lb.	Fd	KH		7179 - D269	MD269	NR	R40H5516	NR	NR

45 – R44141382 is a hub & rotor, for rotor only use R44141193
84 - 9 1/4" Ring Gear, Heavy Duty Axle
89 - Rotor Only with 1/2" Studs
53 - Power Brakes
86 - Dana 60 Axle, Stamped 591 or 2339307, Outboard Mount
333 - Except 9 1/4" Ring Gear
79 - Inboard Mounting
87 - Dana 60 Axle, Stamped 593 or 2339303, Outboard Mount
381 - Rotor and Hub One Piece Assembly W/O ABS Ring

MERITOR DRUM OR ROTOR NO.	CALIPER OR CYLINDER BORE SIZE	MERITOR CALIPER OR WHEEL CYLINDER (LEFT)	MERITOR CALIPER OR WHEEL CYLINDER (RIGHT)	MERITOR CALIPER OR WHEEL CYLINDER REPAIR KIT	MERITOR CALIPER PISTON	MERITOR MASTER CYLINDER	MERITOR MASTER CYLINDER KIT	MERITOR BRAKE HOSE (LEFT)	MERITOR BRAKE HOSE (RIGHT)
DODGE(Cont.)									
B300, B350, PB300, PB350 SERIES VAN - 1TON(Cont.)									
R44141924[381]	3-3/32 "	R42R55119	R42R55118	R4066587	R4090018P	R4112519[53]	N/A	R4578136	R4577317
R44141382[45]	3-3/32 "	R42R55119	R42R55118	R4066587	R4090018P	R4112519[53]	N/A	R4578137	R4577317
R44141193[89]	3-3/32 "	R42R55119	R42R55118	R4066587	R4090018P	R4112519[53]	N/A	R4578136	R4577317
R44141193[89]	3-3/32 "	R42R55119	R42R55118	R4066587	R4090018P	R4112519[53]	N/A	R4578137	R4577317
R44140267[79]	1 "	R4133004	R4133004	R4166822	NR	-	-	R4577915	R4577915
R44140267[79]	7/8 "	R4133627	R4133628	N/A	NR	-	-	R4577915	R4577915
R44140264[333]	7/8 "	R4133627	R4133628	N/A	NR	-	-	R4577915	R4577915
R44140686[86]	7/8 "	R4133627	R4133628	N/A	NR	-	-	R4577915	R4577915
R44140685[84]	1 "	R4133004	R4133004	R4166822	NR	-	-	R4577915	R4577915
R44140685[84]	7/8 "	R4133627	R4133628	N/A	NR	-	-	R4577915	R4577915
R44140679[87]	7/8 "	R4133627	R4133628	N/A	NR	-	-	R4577915	R4577915
R44140679[87]	1 "	R4133004	R4133004	R4166822	NR	-	-	R4577915	R4577915
R44141924[381]	3-3/32 "	R42R55119	R42R55118	R4066587	R4090018P	R4112519[53]	N/A	R4578136	R4577317
R44141382[45]	3-3/32 "	R42R55119	R42R55118	R4066587	R4090018P	R4112519[53]	N/A	R4578137	R4577317
R44141193[89]	3-3/32 "	R42R55119	R42R55118	R4066587	R4090018P	R4112519[53]	N/A	R4578136	R4577317
R44141193[89]	3-3/32 "	R42R55119	R42R55118	R4066587	R4090018P	R4112519[53]	N/A	R4578137	R4577317
R44140267[79]	1 "	R4133004	R4133004	R4166822	NR	-	-	R4577915	R4577915
R44140267[79]	7/8 "	R4133627	R4133628	N/A	NR	-	-	R4577915	R4577915
R44140264[333]	7/8 "	R4133627	R4133628	N/A	NR	-	-	R4577915	R4577915
R44140547[84]	7/8 "	R4133627	R4133628	R4166820	NR	-	-	R4577915	R4577915
R44140542	7/8 "	R4133627	R4133628	R4166820	NR	-	-	R4577915	R4577915
R44141382[45]	3-3/32 "	R42R55119	R42R55118	R4066587	R4090018P	R4112519[53]	N/A	R4577909	R4577317
R44141193[89]	3-3/32 "	R42R55119	R42R55118	R4066587	R4090018P	R4112519[53]	N/A	R4577909	R4577317
R44141193[89]	3-3/32 "	R42R55119	R42R55118	R4066587	R4090018P	R4112519[53]	N/A	R4577909	R4577317
R44140267[79]	7/8 "	R4133627	R4133628	R4166820	NR	-	-	R4577915	R4577915
R44140267[79]	1 "	R4133005	R4133005	R4166822	NR	-	-	R4577915	R4577915
R44140547[84]	1 "	R4133005	R4133005	R4166822	NR	-	-	R4577915	R4577915
R44140542	1 "	R4133005	R4133005	R4166822	NR	-	-	R4577915	R4577915
R44140547[84]	7/8 "	R4133627	R4133628	R4166820	NR	-	-	R4577915	R4577915
R44140542	7/8 "	R4133627	R4133628	R4166820	NR	-	-	R4577915	R4577915
R44141382[45]	3-3/32 "	R42R55119	R42R55118	R4066587	R4090018P	R4112519[53]	N/A	R4577909	R4577317
R44141193[89]	3-3/32 "	R42R55119	R42R55118	R4066587	R4090018P	R4112519[53]	N/A	R4577909	R4577317
R44141193[89]	3-3/32 "	R42R55119	R42R55118	R4066587	R4090018P	R4112519[53]	N/A	R4577909	R4577317
R44140267[79]	7/8 "	R4133627	R4133628	R4166820	NR	-	-	R4577915	R4577915
R44140267[79]	1 "	R4133005	R4133005	R4166822	NR	-	-	R4577915	R4577915
R44140547[84]	1 "	R4133005	R4133005	R4166822	NR	-	-	R4577915	R4577915
R44140542	1 "	R4133005	R4133005	R4166822	NR	-	-	R4577915	R4577915
R44140547[84]	7/8 "	R4133627	R4133628	R4166820	NR	-	-	R4577915	R4577915
R44140542	7/8 "	R4133627	R4133628	R4166820	NR	-	-	R4577915	R4577915
R44141382[45]	3-3/32 "	R42R55119	R42R55118	R4066587	R4090018P	R4112519[53]	N/A	R4577909	R4577317
R44141193[89]	3-3/32 "	R42R55119	R42R55118	R4066587	R4090018P	R4112519[53]	N/A	R4577909	R4577317
R44141193[89]	3-3/32 "	R42R55119	R42R55118	R4066587	R4090018P	R4112519[53]	N/A	R4577909	R4577317
R44140267[79]	1 "	R4133005	R4133005	R4166822	NR	-	-	R4577915	R4577915
R44140267[79]	7/8 "	R4133627	R4133628	R4166820	NR	-	-	R4577915	R4577915
R44140547[84]	1 "	R4133005	R4133005	R4166822	NR	-	-	R4577915	R4577915
R44140542	1 "	R4133005	R4133005	R4166822	NR	-	-	R4577915	R4577915
R44140547[84]	7/8 "	R4133627	R4133628	R4166820	NR	-	-	R4577915	R4577915
R44140542	7/8 "	R4133627	R4133628	R4166820	NR	-	-	R4577915	R4577915
R44141382[45]	3-3/32 "	R42R55119	R42R55118	R4066587	R4090018P	R4112519[53]	N/A	R4577909	R4577317
R44141193[89]	3-3/32 "	R42R55119	R42R55118	R4066587	R4090018P	R4112519[53]	N/A	R4577909	R4577317

MAKE MODEL YEAR AXLE CODE AXLE WEIGHT	AXLE & BRK. TYPE	BRK. MFG.	BRAKE SIZE	FMSI	MERITOR DISC PAD OR BRAKE SHOE	MERITOR GUIDE PIN OR RETURN SPRING KIT	MERITOR CALIPER HWD. KIT OR RETURN SPRING KIT	MERITOR ADJUSTER KIT (LEFT WHEEL)	MERITOR ADJUSTER KIT (RIGHT WHEEL)
DODGE(Cont.)									
B300, B350, PB300, PB350 SERIES VAN - 1TON(Cont.)									
1990									
	Fd	KH		7179 - D269	MD269	NR	R40H5516	NR	NR
5,500 lb.	Ra	BX	12 " x 2-1/2 "	2146AT - 357	R46357	R40H547	R40H4087	R40H2598	R40H2599
	Ra	BX	12 " x 2-1/2 "	2146AT - 357	R46357	R40H547	R40H4087	R40H2598	R40H2599
6200 lb.	Ra	BX	12 " x 2-1/2 "	2146AT - 357	R46357	R40H547	R40H4087	R40H2598	R40H2599
	Ra	BX	12 " x 3 "	2140AT - 358	R46358	R40H547	R40H4087	R40H2598	R40H2599
1989									
	Ra	BX	12 " x 2-1/2 "	2146AT - 357	R46357	R40H547	R40H4087	R40H2598	R40H2599
	Ra	BX	12 " x 2-1/2 "	2146AT - 357	R46357	R40H547	R40H4087	R40H2598	R40H2599
	Ra	BX	12 " x 3 "	2140AT - 358	R46358	R40H547	R40H4087	R40H2598	R40H2599
	Ra	BX	12 " x 3 "	2140AT - 358	R46358	R40H547	R40H4087	R40H2598	R40H2599
	Ra	BX	12 " x 3 "	2140AT - 358	R46358	R40H547	R40H4087	R40H2598	R40H2599
3,600 lb.	Fd	KH		7179 - D269	MD269	NR	R40H5516	NR	NR
	Fd	KH		7179 - D269	MD269	NR	R40H5516	NR	NR
	Fd	KH		7179 - D269	MD269	NR	R40H5516	NR	NR
	Fd	KH		7179 - D269	MD269	NR	R40H5516	NR	NR
	Fd	KH		7179 - D269	MD269	NR	R40H5516	NR	NR
	Fd	KH		7179 - D269	MD269	NR	R40H5516	NR	NR
4,000 lb.	Fd	KH		7179 - D269	MD269	NR	R40H5516	NR	NR
	Fd	KH		7179 - D269	MD269	NR	R40H5516	NR	NR
	Fd	KH		7179 - D269	MD269	NR	R40H5516	NR	NR
	Fd	KH		7179 - D269	MD269	NR	R40H5516	NR	NR
	Fd	KH		7179 - D269	MD269	NR	R40H5516	NR	NR
	Fd	KH		7179 - D269	MD269	NR	R40H5516	NR	NR
	Fd	KH		7179 - D269	MD269	NR	R40H5516	NR	NR
	Fd	KH		7179 - D269	MD269	NR	R40H5516	NR	NR
	Fd	KH		7179 - D269	MD269	NR	R40H5516	NR	NR
	Fd	KH		7179 - D269	MD269	NR	R40H5516	NR	NR
	Fd	KH		7179 - D269	MD269	NR	R40H5516	NR	NR
	Fd	KH		7179 - D269	MD269	NR	R40H5516	NR	NR
5,500 lb.	Ra	BX	12 " x 2-1/2 "	2146AT - 357	R46357	R40H547	R40H4087	R40H2598	R40H2599
	Ra	BX	12 " x 2-1/2 "	2146AT - 357	R46357	R40H547	R40H4087	R40H2598	R40H2599
1988									
	Ra	BX	12 " x 2-1/2 "	2146AT - 357	R46357	R40H547	R40H4087	R40H2598	R40H2599
	Ra	BX	12 " x 2-1/2 "	2146AT - 357	R46357	R40H547	R40H4087	R40H2598	R40H2599
	Ra	BX	12 " x 3 "	2140AT - 358	R46358	R40H547	R40H4087	R40H2598	R40H2599
	Ra	BX	12 " x 3 "	2140AT - 358	R46358	R40H547	R40H4087	R40H2598	R40H2599
	Ra	BX	12 " x 3 "	2140AT - 358	R46358	R40H547	R40H4087	R40H2598	R40H2599
3,600 lb.	Fd	KH		7179 - D269	MD269	NR	R40H5516	NR	NR
	Fd	KH		7179 - D269	MD269	NR	R40H5516	NR	NR
	Fd	KH		7179 - D269	MD269	NR	R40H5516	NR	NR
	Fd	KH		7179 - D269	MD269	NR	R40H5516	NR	NR
	Fd	KH		7179 - D269	MD269	NR	R40H5516	NR	NR
	Fd	KH		7179 - D269	MD269	NR	R40H5516	NR	NR
4,000 lb.	Fd	KH		7179 - D269	MD269	NR	R40H5516	NR	NR
	Fd	KH		7179 - D269	MD269	NR	R40H5516	NR	NR
	Fd	KH		7179 - D269	MD269	NR	R40H5516	NR	NR
	Fd	KH		7179 - D269	MD269	NR	R40H5516	NR	NR
	Fd	KH		7179 - D269	MD269	NR	R40H5516	NR	NR
	Fd	KH		7179 - D269	MD269	NR	R40H5516	NR	NR
	Fd	KH		7179 - D269	MD269	NR	R40H5516	NR	NR
	Fd	KH		7179 - D269	MD269	NR	R40H5516	NR	NR
	Fd	KH		7179 - D269	MD269	NR	R40H5516	NR	NR
	Fd	KH		7179 - D269	MD269	NR	R40H5516	NR	NR
	Fd	KH		7179 - D269	MD269	NR	R40H5516	NR	NR
	Fd	KH		7179 - D269	MD269	NR	R40H5516	NR	NR
5,500 lb.	Ra	BX	12 " x 2-1/2 "	2146AT - 357	R46357	R40H547	R40H4087	R40H2598	R40H2599
	Ra	BX	12 " x 2-1/2 "	2146AT - 357	R46357	R40H547	R40H4087	R40H2598	R40H2599
1987									
	Ra	BX	12 " x 2-1/2 "	2146AT - 357	R46357	R40H547	R40H4087	R40H2598	R40H2599
	Ra	BX	12 " x 2-1/2 "	2146AT - 357	R46357	R40H547	R40H4087	R40H2598	R40H2599
	Ra	BX	12 " x 3 "	2140AT - 358	R46358	R40H547	R40H4087	R40H2598	R40H2599
	Ra	BX	12 " x 3 "	2140AT - 358	R46358	R40H547	R40H4087	R40H2598	R40H2599
	Ra	BX	12 " x 3 "	2140AT - 358	R46358	R40H547	R40H4087	R40H2598	R40H2599
3,600 lb.	Fd	KH		7179 - D269	MD269	NR	R40H5516	NR	NR

45 – R44141382 is a hub & rotor, for rotor only use R44141193
84 - 9 1/4" Ring Gear, Heavy Duty Axle
118 - Gasoline Engine, Power Brakes, Plastic Reservior
53 - Power Brakes
89 - Rotor Only with 1/2" Studs
119 - Power Brakes, School Bus
79 - Inboard Mounting
99 - Casting # 95961
127 - Anchor

MERITOR DRUM OR ROTOR NO.	CALIPER OR CYLINDER BORE SIZE	MERITOR CALIPER OR WHEEL CYLINDER (LEFT)	MERITOR CALIPER OR WHEEL CYLINDER (RIGHT)	MERITOR CALIPER OR WHEEL CYLINDER REPAIR KIT	MERITOR CALIPER PISTON	MERITOR MASTER CYLINDER	MERITOR MASTER CYLINDER KIT	MERITOR BRAKE HOSE (LEFT)	MERITOR BRAKE HOSE (RIGHT)
									DODGE(Cont.)
									B300, B350, PB300, PB350 SERIES VAN - 1TON(Cont.)
R44141193[89]	3-3/32 "	R42R55119	R42R55118	R4066587	R4090018P	R4112519[53]	N/A	R4577909	R4577317
R44140267[79]	1 "	R4133005	R4133005	R4166822	NR	-	-	R4577915	R4577915
R44140267[79]	7/8 "	R4133627	R4133628	R4166820	NR	-	-	R4577915	R4577915
R44140547[84]	1 "	R4133005	R4133005	R4166822	NR	-	-	R4577915	R4577915
R44140542	1 "	R4133005	R4133005	R4166822	NR	-	-	R4577915	R4577915
R44140547[84]	7/8 "	R4133627	R4133628	R4166820	NR	-	-	R4577315	R4577315
R44140547[84]	1 "	R4133005	R4133005	R4166822	NR	-	-	R4577315	R4577315
R44140542	7/8 "	R4133627	R4133628	R4166820	NR	-	-	R4577315	R4577315
R44140542	1 "	R4133005	R4133005	R4166822	NR	-	-	R4577315	R4577315
R44140542	1-1/8 "	R4133206	R4133206	R4166935	NR	-	-	R4577315	R4577315
R44141382[45]	3-3/32 "	R42R55119	R42R55118	R4066587	R4090018P	R4111583[119]	R4122598	R4577316[128]	R4577317
R44141382[45]	3-3/32 "	R42R55119	R42R55118	R4066587	R4090018P	R4113041[309]	R4122934	R4577316[128]	R4577317
R44141382[45]	3-3/32 "	R42R55119	R42R55118	R4066587	R4090018P	R4113041[309]	R4122934	R4577169[127]	R4577169
R44141382[45]	3-3/32 "	R42R55119	R42R55118	R4066587	R4090018P	R4111860[118]	R4122388	R4577316[128]	R4577317
R44141382[45]	3-3/32 "	R42R55119	R42R55118	R4066587	R4090018P	R4111583[119]	R4122598	R4577169[127]	R4577169
R44141382[45]	3-3/32 "	R42R55119	R42R55118	R4066587	R4090018P	R4111860[118]	R4122388	R4577169[127]	R4577169
R44141193[89]	3-3/32 "	R42R55119	R42R55118	R4066587	R4090018P	R4113041[309]	R4122934	R4577169[127]	R4577169
R44141193[89]	3-3/32 "	R42R55119	R42R55118	R4066587	R4090018P	R4113041[309]	R4122934	R4577316[128]	R4577317
R44141193[89]	3-3/32 "	R42R55119	R42R55118	R4066587	R4090018P	R4111583[119]	R4122598	R4577169[127]	R4577169
R44141193[89]	3-3/32 "	R42R55119	R42R55118	R4066587	R4090018P	R4111860[118]	R4122388	R4577316[128]	R4577317
R44141193[89]	3-3/32 "	R42R55119	R42R55118	R4066587	R4090018P	R4113041[309]	R4122934	R4577316[128]	R4577317
R44141193[89]	3-3/32 "	R42R55119	R42R55118	R4066587	R4090018P	R4111583[119]	R4122598	R4577169[127]	R4577169
R44141193[89]	3-3/32 "	R42R55119	R42R55118	R4066587	R4090018P	R4111583[119]	R4122598	R4577316[128]	R4577317
R44141193[89]	3-3/32 "	R42R55119	R42R55118	R4066587	R4090018P	R4111860[118]	R4122388	R4577169[127]	R4577169
R44141193[89]	3-3/32 "	R42R55119	R42R55118	R4066587	R4090018P	R4111860[118]	R4122388	R4577169[127]	R4577169
R44141193[89]	3-3/32 "	R42R55119	R42R55118	R4066587	R4090018P	R4113041[309]	R4122934	R4577169[127]	R4577169
R44141193[89]	3-3/32 "	R42R55119	R42R55118	R4066587	R4090018P	R4111583[119]	R4122598	R4577316[128]	R4577317
R44141193[89]	3-3/32 "	R42R55119	R42R55118	R4066587	R4090018P	R4111860[118]	R4122388	R4577316[128]	R4577317
R44140267[79]	1 "	R4133005	R4133005	R4166822	NR	-	-	R4577315	R4577315
R44140267[79]	7/8 "	R4133627	R4133628	R4166820	NR	-	-	R4577315	R4577315
R44140547[84]	1 "	R4133005	R4133005	R4166822	NR	-	-	R4577315	R4577315
R44140547[84]	7/8 "	R4133627	R4133628	R4166820	NR	-	-	R4577315	R4577315
R44140542	7/8 "	R4133627	R4133628	R4166820	NR	-	-	R4577315	R4577315
R44140542	1 "	R4133005	R4133005	R4166822	NR	-	-	R4577315	R4577315
R44140542	1-1/8 "	R4133206	R4133206	R4166935	NR	-	-	R4577315	R4577315
R44141382[45]	3-3/32 "	R42R55119	R42R55118	R4066587	R4090018P	R4111583[119]	R4122598	R4577316[128]	R4577317
R44141382[45]	3-3/32 "	R42R55119	R42R55118	R4066587	R4090018P	R4113041[309]	R4122934	R4577316[128]	R4577317
R44141382[45]	3-3/32 "	R42R55119	R42R55118	R4066587	R4090018P	R4111583[119]	R4122598	R4577169[127]	R4577169
R44141382[45]	3-3/32 "	R42R55119	R42R55118	R4066587	R4090018P	R4111860[118]	R4122388	R4577316[128]	R4577317
R44141382[45]	3-3/32 "	R42R55119	R42R55118	R4066587	R4090018P	R4113041[309]	R4122934	R4577169[127]	R4577169
R44141382[45]	3-3/32 "	R42R55119	R42R55118	R4066587	R4090018P	R4111860[118]	R4122388	R4577169[127]	R4577169
R44141193[89]	3-3/32 "	R42R55119	R42R55118	R4066587	R4090018P	R4113041[309]	R4122934	R4577169[127]	R4577169
R44141193[89]	3-3/32 "	R42R55119	R42R55118	R4066587	R4090018P	R4111583[119]	R4122598	R4577169[127]	R4577169
R44141193[89]	3-3/32 "	R42R55119	R42R55118	R4066587	R4090018P	R4111860[118]	R4122388	R4577316[128]	R4577317
R44141193[89]	3-3/32 "	R42R55119	R42R55118	R4066587	R4090018P	R4113041[309]	R4122934	R4577316[128]	R4577317
R44141193[89]	3-3/32 "	R42R55119	R42R55118	R4066587	R4090018P	R4111583[119]	R4122598	R4577316[128]	R4577317
R44141193[89]	3-3/32 "	R42R55119	R42R55118	R4066587	R4090018P	R4111860[118]	R4122388	R4577169[127]	R4577169
R44141193[89]	3-3/32 "	R42R55119	R42R55118	R4066587	R4090018P	R4113041[309]	R4122934	R4577316[128]	R4577317
R44141193[89]	3-3/32 "	R42R55119	R42R55118	R4066587	R4090018P	R4113041[309]	R4122934	R4577169[127]	R4577169
R44141193[89]	3-3/32 "	R42R55119	R42R55118	R4066587	R4090018P	R4111583[119]	R4122598	R4577316[128]	R4577317
R44141193[89]	3-3/32 "	R42R55119	R42R55118	R4066587	R4090018P	R4111860[118]	R4122388	R4577316[128]	R4577317
R44141193[89]	3-3/32 "	R42R55119	R42R55118	R4066587	R4090018P	R4111860[118]	R4122388	R4577169[127]	R4577169
R44140267[79]	1 "	R4133005	R4133005	R4166822	NR	-	-	R4577315	R4577315
R44140267[79]	7/8 "	R4133627	R4133628	R4166820	NR	-	-	R4577315	R4577315
R44140547[84]	7/8 "	R4133627	R4133628	R4166820	NR	-	-	R4577315	R4577315
R44140547[84]	1 "	R4133005	R4133005	R4166822	NR	-	-	R4577315	R4577315
R44140312[99]	1 "	R4133005	R4133005	R4166822	NR	-	-	R4577315	R4577315
R44140312[99]	1-1/8 "	R4133206	R4133206	R4166935	NR	-	-	R4577315	R4577315
R44140312[99]	7/8 "	R4133627	R4133628	R4166820	NR	-	-	R4577315	R4577315
R44141382[45]	3-3/32 "	R42R55119	R42R55118	R4066587	R4090018P	R4111860[118]	R4122388	R4577169[127]	R4577169

128 - Bracket

309 - Power Brakes, Hydroboost

MAKE MODEL YEAR AXLE CODE AXLE WEIGHT	AXLE & BRK. TYPE	BRK. MFG.	BRAKE SIZE	FMSI	MERITOR DISC PAD OR BRAKE SHOE	MERITOR GUIDE PIN OR RETURN SPRING KIT	MERITOR CALIPER HWD. KIT OR RETURN SPRING KIT	MERITOR ADJUSTER KIT (LEFT WHEEL)	MERITOR ADJUSTER KIT (RIGHT WHEEL)
DODGE(Cont.)									
B300, B350, PB300, PB350 SERIES VAN - 1TON(Cont.)									
1987									
	Fd	KH		7179 - D269	MD269	NR	R40H5516	NR	NR
	Fd	KH		7179 - D269	MD269	NR	R40H5516	NR	NR
	Fd	KH		7179 - D269	MD269	NR	R40H5516	NR	NR
	Fd	KH		7179 - D269	MD269	NR	R40H5516	NR	NR
	Fd	KH		7179 - D269	MD269	NR	R40H5516	NR	NR
4,000 lb.	Fd	KH		7179 - D269	MD269	NR	R40H5516	NR	NR
	Fd	KH		7179 - D269	MD269	NR	R40H5516	NR	NR
	Fd	KH		7179 - D269	MD269	NR	R40H5516	NR	NR
	Fd	KH		7179 - D269	MD269	NR	R40H5516	NR	NR
	Fd	KH		7179 - D269	MD269	NR	R40H5516	NR	NR
	Fd	KH		7179 - D269	MD269	NR	R40H5516	NR	NR
	Fd	KH		7179 - D269	MD269	NR	R40H5516	NR	NR
	Fd	KH		7179 - D269	MD269	NR	R40H5516	NR	NR
	Fd	KH		7179 - D269	MD269	NR	R40H5516	NR	NR
	Fd	KH		7179 - D269	MD269	NR	R40H5516	NR	NR
	Fd	KH		7179 - D269	MD269	NR	R40H5516	NR	NR
5,500 lb.	Ra	BX	12 " x 2-1/2 "	2146AT - 357	R46357	R40H547	R40H4087	R40H2598	R40H2599
	Ra	BX	12 " x 2-1/2 "	2146AT - 357	R46357	R40H547	R40H4087	R40H2598	R40H2599
9,000 lb. GVW	Ra	BX	12 " x 3 "	2140AT - 358	R46358	R40H547	R40H4087	R40H2598	R40H2599
	Ra	BX	12 " x 3 "	2140AT - 358	R46358	R40H547	R40H4087	R40H2598	R40H2599
	Ra	BX	12 " x 3 "	2140AT - 358	R46358	R40H547	R40H4087	R40H2598	R40H2599
1986									
	Ra	BX	12 " x 2-1/2 "	2146AT - 357	R46357	R40H547	R40H4087	R40H2598	R40H2599
	Ra	BX	12 " x 2-1/2 "	2146AT - 357	R46357	R40H547	R40H4087	R40H2598	R40H2599
	Ra	BX	12 " x 3 "	2140AT - 358	R46358	R40H547	R40H4087	R40H2598	R40H2599
	Ra	BX	12 " x 3 "	2140AT - 358	R46358	R40H547	R40H4087	R40H2598	R40H2599
	Ra	BX	12 " x 3 "	2140AT - 358	R46358	R40H547	R40H4087	R40H2598	R40H2599
3,600 lb.	Fd	KH		7179 - D269	MD269	NR	R40H5516	NR	NR
	Fd	KH		7179 - D269	MD269	NR	R40H5516	NR	NR
	Fd	KH		7179 - D269	MD269	NR	R40H5516	NR	NR
	Fd	KH		7179 - D269	MD269	NR	R40H5516	NR	NR
	Fd	KH		7179 - D269	MD269	NR	R40H5516	NR	NR
	Fd	KH		7179 - D269	MD269	NR	R40H5516	NR	NR
4,000 lb.	Fd	KH		7179 - D269	MD269	NR	R40H5516	NR	NR
	Fd	KH		7179 - D269	MD269	NR	R40H5516	NR	NR
	Fd	KH		7179 - D269	MD269	NR	R40H5516	NR	NR
	Fd	KH		7179 - D269	MD269	NR	R40H5516	NR	NR
	Fd	KH		7179 - D269	MD269	NR	R40H5516	NR	NR
	Fd	KH		7179 - D269	MD269	NR	R40H5516	NR	NR
	Fd	KH		7179 - D269	MD269	NR	R40H5516	NR	NR
	Fd	KH		7179 - D269	MD269	NR	R40H5516	NR	NR
	Fd	KH		7179 - D269	MD269	NR	R40H5516	NR	NR
	Fd	KH		7179 - D269	MD269	NR	R40H5516	NR	NR
	Fd	KH		7179 - D269	MD269	NR	R40H5516	NR	NR
5,500 lb.	Ra	BX	12 " x 2-1/2 "	2146AT - 357	R46357	R40H547	R40H4087	R40H2598	R40H2599
	Ra	BX	12 " x 2-1/2 "	2146AT - 357	R46357	R40H547	R40H4087	R40H2598	R40H2599
9,000 lb. GVW	Ra	BX	12 " x 3 "	2140AT - 358	R46358	R40H547	R40H4087	R40H2598	R40H2599
	Ra	BX	12 " x 3 "	2140AT - 358	R46358	R40H547	R40H4087	R40H2598	R40H2599
	Ra	BX	12 " x 3 "	2140AT - 358	R46358	R40H547	R40H4087	R40H2598	R40H2599
1985									
	Ra	BX	12 " x 2-1/2 "	2146AT - 357	R46357	R40H547	R40H4087	R40H2598	R40H2599
	Ra	BX	12 " x 2-1/2 "	2146AT - 357	R46357	R40H547	R40H4087	R40H2598	R40H2599
	Ra	BX	12 " x 3 "	2140AT - 358	R46358	R40H547	R40H4087	R40H2598	R40H2599
	Ra	BX	12 " x 3 "	2140AT - 358	R46358	R40H547	R40H4087	R40H2598	R40H2599
	Ra	BX	12 " x 3 "	2140AT - 358	R46358	R40H547	R40H4087	R40H2598	R40H2599
3,600 lb.	Fd	KH		7179 - D269	MD269	NR	R40H5516	NR	NR
	Fd	KH		7179 - D269	MD269	NR	R40H5516	NR	NR
	Fd	KH		7179 - D269	MD269	NR	R40H5516	NR	NR
	Fd	KH		7179 - D269	MD269	NR	R40H5516	NR	NR
	Fd	KH		7179 - D269	MD269	NR	R40H5516	NR	NR
	Fd	KH		7179 - D269	MD269	NR	R40H5516	NR	NR
4,000 lb.	Fd	KH		7179 - D269	MD269	NR	R40H5516	NR	NR

45 – R44141382 is a hub & rotor, for rotor only use R44141193
89 - Rotor Only with 1/2" Studs
119 - Power Brakes, School Bus
79 - Inboard Mounting
99 - Casting # 95961
127 - Anchor
84 - 9 1/4" Ring Gear, Heavy Duty Axle
118 - Gasoline Engine, Power Brakes, Plastic Reservior
128 - Bracket

MERITOR DRUM OR ROTOR NO.	CALIPER OR CYLINDER BORE SIZE	MERITOR CALIPER OR WHEEL CYLINDER (LEFT)	MERITOR CALIPER OR WHEEL CYLINDER (RIGHT)	MERITOR CALIPER OR WHEEL CYLINDER REPAIR KIT	MERITOR CALIPER PISTON	MERITOR MASTER CYLINDER	MERITOR MASTER CYLINDER KIT	MERITOR BRAKE HOSE (LEFT)	MERITOR BRAKE HOSE (RIGHT)
									DODGE(Cont.)
									B300, B350, PB300, PB350 SERIES VAN - 1TON(Cont.)
R44141382[45]	3-3/32 "	R42R55119	R42R55118	R4066587	R4090018P	R4113041[309]	R4122934	R4577316[128]	R4577317
R44141382[45]	3-3/32 "	R42R55119	R42R55118	R4066587	R4090018P	R4113041[309]	R4122934	R4577169[127]	R4577169
R44141382[45]	3-3/32 "	R42R55119	R42R55118	R4066587	R4090018P	R4111860[118]	R4122388	R4577316[128]	R4577317
R44141382[45]	3-3/32 "	R42R55119	R42R55118	R4066587	R4090018P	R4111583[119]	R4122598	R4577316[128]	R4577317
R44141382[45]	3-3/32 "	R42R55119	R42R55118	R4066587	R4090018P	R4111583[119]	R4122598	R4577169[127]	R4577169
R44141193[89]	3-3/32 "	R42R55119	R42R55118	R4066587	R4090018P	R4111860[118]	R4122388	R4577316[128]	R4577317
R44141193[89]	3-3/32 "	R42R55119	R42R55118	R4066587	R4090018P	R4111860[118]	R4122388	R4577169[127]	R4577169
R44141193[89]	3-3/32 "	R42R55119	R42R55118	R4066587	R4090018P	R4113041[309]	R4122934	R4577169[127]	R4577169
R44141193[89]	3-3/32 "	R42R55119	R42R55118	R4066587	R4090018P	R4111583[119]	R4122598	R4577169[127]	R4577169
R44141193[89]	3-3/32 "	R42R55119	R42R55118	R4066587	R4090018P	R4111583[119]	R4122598	R4577316[128]	R4577317
R44141193[89]	3-3/32 "	R42R55119	R42R55118	R4066587	R4090018P	R4113041[309]	R4122934	R4577169[127]	R4577169
R44141193[89]	3-3/32 "	R42R55119	R42R55118	R4066587	R4090018P	R4111583[119]	R4122598	R4577169[127]	R4577169
R44141193[89]	3-3/32 "	R42R55119	R42R55118	R4066587	R4090018P	R4113041[309]	R4122934	R4577316[128]	R4577317
R44141193[89]	3-3/32 "	R42R55119	R42R55118	R4066587	R4090018P	R4113041[309]	R4122934	R4577316[128]	R4577317
R44141193[89]	3-3/32 "	R42R55119	R42R55118	R4066587	R4090018P	R4111860[118]	R4122388	R4577316[128]	R4577317
R44141193[89]	3-3/32 "	R42R55119	R42R55118	R4066587	R4090018P	R4111583[119]	R4122598	R4577316[128]	R4577317
R44141193[89]	3-3/32 "	R42R55119	R42R55118	R4066587	R4090018P	R4111860[118]	R4122388	R4577169[127]	R4577169
R44140267[79]	1 "	R4133005	R4133005	R4166822	NR	-	-	R4577315	R4577315
R44140267[79]	7/8 "	R4133627	R4133628	R4166820	NR	-	-	R4577315	R4577315
R44140542	7/8 "	R4133627	R4133628	R4166820	NR	-	-	R4577315	R4577315
R44140542	1-1/8 "	R4133206	R4133206	R4166935	NR	-	-	R4577315	R4577315
R44140542	1 "	R4133005	R4133005	R4166822	NR	-	-	R4577315	R4577315
R44140547[84]	7/8 "	R4133627	R4133628	R4166820	NR	-	-	R4577315	R4577315
R44140547[84]	1 "	R4133005	R4133005	R4166822	NR	-	-	R4577315	R4577315
R44140312[99]	1 "	R4133005	R4133005	R4166822	NR	-	-	R4577315	R4577315
R44140312[99]	1-1/8 "	R4133206	R4133206	R4166935	NR	-	-	R4577315	R4577315
R44140312[99]	7/8 "	R4133627	R4133628	R4166820	NR	-	-	R4577315	R4577315
R44141382[45]	3-3/32 "	R42R55119	R42R55118	R4066587	R4090018P	R4113041[309]	R4122934	R4577316[128]	R4577317
R44141382[45]	3-3/32 "	R42R55119	R42R55118	R4066587	R4090018P	R4111583[119]	R4122598	R4577316[128]	R4577317
R44141382[45]	3-3/32 "	R42R55119	R42R55118	R4066587	R4090018P	R4113041[309]	R4122934	R4577169[127]	R4577169
R44141382[45]	3-3/32 "	R42R55119	R42R55118	R4066587	R4090018P	R4111860[118]	R4122388	R4577169[127]	R4577169
R44141382[45]	3-3/32 "	R42R55119	R42R55118	R4066587	R4090018P	R4111860[118]	R4122388	R4577316[128]	R4577317
R44141382[45]	3-3/32 "	R42R55119	R42R55118	R4066587	R4090018P	R4111583[119]	R4122598	R4577169[127]	R4577169
R44141193[89]	3-3/32 "	R42R55119	R42R55118	R4066587	R4090018P	R4113041[309]	R4122934	R4577316[128]	R4577317
R44141193[89]	3-3/32 "	R42R55119	R42R55118	R4066587	R4090018P	R4111583[119]	R4122598	R4577169[127]	R4577169
R44141193[89]	3-3/32 "	R42R55119	R42R55118	R4066587	R4090018P	R4111583[119]	R4122598	R4577316[128]	R4577317
R44141193[89]	3-3/32 "	R42R55119	R42R55118	R4066587	R4090018P	R4111583[119]	R4122598	R4577169[127]	R4577169
R44141193[89]	3-3/32 "	R42R55119	R42R55118	R4066587	R4090018P	R4111860[118]	R4122388	R4577316[128]	R4577317
R44141193[89]	3-3/32 "	R42R55119	R42R55118	R4066587	R4090018P	R4113041[309]	R4122934	R4577169[127]	R4577169
R44141193[89]	3-3/32 "	R42R55119	R42R55118	R4066587	R4090018P	R4113041[309]	R4122934	R4577169[127]	R4577169
R44141193[89]	3-3/32 "	R42R55119	R42R55118	R4066587	R4090018P	R4111860[118]	R4122388	R4577169[127]	R4577169
R44141193[89]	3-3/32 "	R42R55119	R42R55118	R4066587	R4090018P	R4111583[119]	R4122598	R4577316[128]	R4577317
R44141193[89]	3-3/32 "	R42R55119	R42R55118	R4066587	R4090018P	R4111860[118]	R4122388	R4577169[127]	R4577169
R44141193[89]	3-3/32 "	R42R55119	R42R55118	R4066587	R4090018P	R4113041[309]	R4122934	R4577316[128]	R4577317
R44141193[89]	3-3/32 "	R42R55119	R42R55118	R4066587	R4090018P	R4111860[118]	R4122388	R4577316[128]	R4577317
R44140267[79]	7/8 "	R4133627	R4133628	R4166820	NR	-	-	R4577315	R4577315
R44140267[79]	1 "	R4133005	R4133005	R4166822	NR	-	-	R4577315	R4577315
R44140542	1 "	R4133005	R4133005	R4166822	NR	-	-	R4577315	R4577315
R44140542	1-1/8 "	R4133206	R4133206	R4166935	NR	-	-	R4577315	R4577315
R44140542	7/8 "	R4133627	R4133628	R4166820	NR	-	-	R4577315	R4577315
R44140547[84]	7/8 "	R4133627	R4133628	R4166820	NR	-	-	R4577315	R4577315
R44140547[84]	1 "	R4133005	R4133005	R4166822	NR	-	-	R4577315	R4577315
R44140312[99]	7/8 "	R4133627	R4133628	R4166820	NR	-	-	R4577315	R4577315
R44140312[99]	1-1/8 "	R4133206	R4133206	R4166935	NR	-	-	R4577315	R4577315
R44140312[99]	1 "	R4133005	R4133005	R4166822	NR	-	-	R4577315	R4577315
R44141382[45]	3-3/32 "	R42R55119	R42R55118	R4066587	R4090018P	R4113041[309]	R4122934	R4577316[128]	R4577317
R44141382[45]	3-3/32 "	R42R55119	R42R55118	R4066587	R4090018P	R4111583[119]	R4122598	R4577316[128]	R4577317
R44141382[45]	3-3/32 "	R42R55119	R42R55118	R4066587	R4090018P	R4113041[309]	R4122934	R4577169[127]	R4577169
R44141382[45]	3-3/32 "	R42R55119	R42R55118	R4066587	R4090018P	R4111860[118]	R4122388	R4577169[127]	R4577169
R44141382[45]	3-3/32 "	R42R55119	R42R55118	R4066587	R4090018P	R4111583[119]	R4122598	R4577169[127]	R4577169
R44141382[45]	3-3/32 "	R42R55119	R42R55118	R4066587	R4090018P	R4111860[118]	R4122388	R4577316[128]	R4577317
R44141193[89]	3-3/32 "	R42R55119	R42R55118	R4066587	R4090018P	R4111860[118]	R4122388	R4577316[128]	R4577317

309 - Power Brakes, Hydroboost

MAKE MODEL YEAR AXLE CODE AXLE WEIGHT	AXLE & BRK. TYPE	BRK. MFG.	BRAKE SIZE	FMSI	MERITOR DISC PAD OR BRAKE SHOE	MERITOR GUIDE PIN OR RETURN SPRING KIT	MERITOR CALIPER HWD. KIT OR RETURN SPRING KIT	MERITOR ADJUSTER KIT (LEFT WHEEL)	MERITOR ADJUSTER KIT (RIGHT WHEEL)
DODGE(Cont.)									
B300, B350, PB300, PB350 SERIES VAN - 1TON(Cont.)									
1985									
4,000 lb.	Fd	KH		7179 - D269	MD269	NR	R40H5516	NR	NR
	Fd	KH		7179 - D269	MD269	NR	R40H5516	NR	NR
	Fd	KH		7179 - D269	MD269	NR	R40H5516	NR	NR
	Fd	KH		7179 - D269	MD269	NR	R40H5516	NR	NR
	Fd	KH		7179 - D269	MD269	NR	R40H5516	NR	NR
	Fd	KH		7179 - D269	MD269	NR	R40H5516	NR	NR
	Fd	KH		7179 - D269	MD269	NR	R40H5516	NR	NR
	Fd	KH		7179 - D269	MD269	NR	R40H5516	NR	NR
	Fd	KH		7179 - D269	MD269	NR	R40H5516	NR	NR
	Fd	KH		7179 - D269	MD269	NR	R40H5516	NR	NR
	Fd	KH		7179 - D269	MD269	NR	R40H5516	NR	NR
5,500 lb.	Ra	BX	12 " x 2-1/2 "	2146AT - 357	R46357	R40H547	R40H4087	R40H2598	R40H2599
	Ra	BX	12 " x 2-1/2 "	2146AT - 357	R46357	R40H547	R40H4087	R40H2598	R40H2599
9,000 lb. GVW	Ra	BX	12 " x 3 "	2140AT - 358	R46358	R40H547	R40H4087	R40H2598	R40H2599
	Ra	BX	12 " x 3 "	2140AT - 358	R46358	R40H547	R40H4087	R40H2598	R40H2599
	Ra	BX	12 " x 3 "	2140AT - 358	R46358	R40H547	R40H4087	R40H2598	R40H2599
1984									
	Ra	BX	12 " x 2-1/2 "	2146AT - 357	R46357	R40H547	R40H4087	R40H2598	R40H2599
	Ra	BX	12 " x 2-1/2 "	2146AT - 357	R46357	R40H547	R40H4087	R40H2598	R40H2599
	Ra	BX	12 " x 3 "	2140AT - 358	R46358	R40H547	R40H4087	R40H2598	R40H2599
	Ra	BX	12 " x 3 "	2140AT - 358	R46358	R40H547	R40H4087	R40H2598	R40H2599
	Ra	BX	12 " x 3 "	2140AT - 358	R46358	R40H547	R40H4087	R40H2598	R40H2599
3,600 lb.	Fd	KH		7179 - D269	MD269	NR	R40H5516	NR	NR
	Fd	KH		7179 - D269	MD269	NR	R40H5516	NR	NR
	Fd	KH		7179 - D269	MD269	NR	R40H5516	NR	NR
	Fd	KH		7179 - D269	MD269	NR	R40H5516	NR	NR
	Fd	KH		7179 - D269	MD269	NR	R40H5516	NR	NR
	Fd	KH		7179 - D269	MD269	NR	R40H5516	NR	NR
4,000 lb.	Fd	KH		7179 - D269	MD269	NR	R40H5516	NR	NR
	Fd	KH		7179 - D269	MD269	NR	R40H5516	NR	NR
	Fd	KH		7179 - D269	MD269	NR	R40H5516	NR	NR
	Fd	KH		7179 - D269	MD269	NR	R40H5516	NR	NR
	Fd	KH		7179 - D269	MD269	NR	R40H5516	NR	NR
	Fd	KH		7179 - D269	MD269	NR	R40H5516	NR	NR
	Fd	KH		7179 - D269	MD269	NR	R40H5516	NR	NR
	Fd	KH		7179 - D269	MD269	NR	R40H5516	NR	NR
	Fd	KH		7179 - D269	MD269	NR	R40H5516	NR	NR
	Fd	KH		7179 - D269	MD269	NR	R40H5516	NR	NR
	Fd	KH		7179 - D269	MD269	NR	R40H5516	NR	NR
	Fd	KH		7179 - D269	MD269	NR	R40H5516	NR	NR
5,500 lb.	Ra	BX	12 " x 2-1/2 "	2146AT - 357	R46357	R40H547	R40H4087	R40H2598	R40H2599
	Ra	BX	12 " x 2-1/2 "	2146AT - 357	R46357	R40H547	R40H4087	R40H2598	R40H2599
9,000 lb. GVW	Ra	BX	12 " x 3 "	2140AT - 358	R46358	R40H547	R40H4087	R40H2598	R40H2599
	Ra	BX	12 " x 3 "	2140AT - 358	R46358	R40H547	R40H4087	R40H2598	R40H2599
	Ra	BX	12 " x 3 "	2140AT - 358	R46358	R40H547	R40H4087	R40H2598	R40H2599
1983									
	Ra	BX	12 " x 2-1/2 "	2146AT - 357	R46357	R40H547	R40H4087	R40H2598	R40H2599
	Ra	BX	12 " x 2-1/2 "	2146AT - 357	R46357	R40H547	R40H4087	R40H2598	R40H2599
	Ra	BX	12 " x 3 "	2140AT - 358	R46358	R40H547	R40H4087	R40H2598	R40H2599
	Ra	BX	12 " x 3 "	2140AT - 358	R46358	R40H547	R40H4087	R40H2598	R40H2599
	Ra	BX	12 " x 3 "	2140AT - 358	R46358	R40H547	R40H4087	R40H2598	R40H2599
3,600 lb.	Fd	KH		7179 - D269	MD269	NR	R40H5516	NR	NR
	Fd	KH		7179 - D269	MD269	NR	R40H5516	NR	NR
	Fd	KH		7179 - D269	MD269	NR	R40H5516	NR	NR
	Fd	KH		7179 - D269	MD269	NR	R40H5516	NR	NR
	Fd	KH		7179 - D269	MD269	NR	R40H5516	NR	NR
	Fd	KH		7179 - D269	MD269	NR	R40H5516	NR	NR
4,000 lb.	Fd	KH		7179 - D269	MD269	NR	R40H5516	NR	NR
	Fd	KH		7179 - D269	MD269	NR	R40H5516	NR	NR
	Fd	KH		7179 - D269	MD269	NR	R40H5516	NR	NR
	Fd	KH		7179 - D269	MD269	NR	R40H5516	NR	NR
	Fd	KH		7179 - D269	MD269	NR	R40H5516	NR	NR
	Fd	KH		7179 - D269	MD269	NR	R40H5516	NR	NR
	Fd	KH		7179 - D269	MD269	NR	R40H5516	NR	NR

45 - R44141382 is a hub & rotor, for rotor only use R44141193
89 - Rotor Only with 1/2" Studs
119 - Power Brakes, School Bus
79 - Inboard Mounting
99 - Casting # 95961
127 - Anchor
84 - 9 1/4" Ring Gear, Heavy Duty Axle
118 - Gasoline Engine, Power Brakes, Plastic Reservior
128 - Bracket

MERITOR DRUM OR ROTOR NO.	CALIPER OR CYLINDER BORE SIZE	MERITOR CALIPER OR WHEEL CYLINDER (LEFT)	MERITOR CALIPER OR WHEEL CYLINDER (RIGHT)	MERITOR CALIPER OR WHEEL CYLINDER REPAIR KIT	MERITOR CALIPER PISTON	MERITOR MASTER CYLINDER	MERITOR MASTER CYLINDER KIT	MERITOR BRAKE HOSE (LEFT)	MERITOR BRAKE HOSE (RIGHT)
									DODGE(Cont.)
									B300, B350, PB300, PB350 SERIES VAN - 1TON(Cont.)
R44141193[89]	3-3/32 "	R42R55119	R42R55118	R4066587	R4090018P	R4111583[119]	R4122598	R4577169[127]	R4577169
R44141193[89]	3-3/32 "	R42R55119	R42R55118	R4066587	R4090018P	R4113041[309]	R4122934	R4577316[128]	R4577317
R44141193[89]	3-3/32 "	R42R55119	R42R55118	R4066587	R4090018P	R4113041[309]	R4122934	R4577169[127]	R4577169
R44141193[89]	3-3/32 "	R42R55119	R42R55118	R4066587	R4090018P	R4111860[118]	R4122388	R4577316[128]	R4577317
R44141193[89]	3-3/32 "	R42R55119	R42R55118	R4066587	R4090018P	R4113041[309]	R4122934	R4577169[127]	R4577169
R44141193[89]	3-3/32 "	R42R55119	R42R55118	R4066587	R4090018P	R4111860[118]	R4122388	R4577169[127]	R4577169
R44141193[89]	3-3/32 "	R42R55119	R42R55118	R4066587	R4090018P	R4111860[118]	R4122388	R4577169[127]	R4577169
R44141193[89]	3-3/32 "	R42R55119	R42R55118	R4066587	R4090018P	R4111583[119]	R4122598	R4577316[128]	R4577317
R44141193[89]	3-3/32 "	R42R55119	R42R55118	R4066587	R4090018P	R4111583[119]	R4122598	R4577316[128]	R4577317
R44141193[89]	3-3/32 "	R42R55119	R42R55118	R4066587	R4090018P	R4113041[309]	R4122934	R4577316[128]	R4577317
R44141193[89]	3-3/32 "	R42R55119	R42R55118	R4066587	R4090018P	R4111583[119]	R4122598	R4577169[127]	R4577169
R44140267[79]	1 "	R4133005	R4133005	R4166822	NR	-	-	R4577315	R4577315
R44140267[79]	7/8 "	R4133627	R4133628	R4166820	NR	-	-	R4577315	R4577315
R44140542	1-1/8 "	R4133206	R4133206	R4166935	NR	-	-	R4577315	R4577315
R44140542	1 "	R4133005	R4133005	R4166822	NR	-	-	R4577315	R4577315
R44140542	7/8 "	R4133627	R4133628	R4166820	NR	-	-	R4577315	R4577315
R44140547[84]	7/8 "	R4133627	R4133628	R4166820	NR	-	-	R4577315	R4577315
R44140547[84]	1 "	R4133005	R4133005	R4166822	NR	-	-	R4577315	R4577315
R44140312[99]	1 "	R4133005	R4133005	R4166822	NR	-	-	R4577315	R4577315
R44140312[99]	7/8 "	R4133627	R4133628	R4166820	NR	-	-	R4577315	R4577315
R44140312[99]	1-1/8 "	R4133206	R4133206	R4166935	NR	-	-	R4577315	R4577315
R44141382[45]	3-3/32 "	R42R55119	R42R55118	R4066587	R4090018P	R4113041[309]	R4122934	R4577316[128]	R4577317
R44141382[45]	3-3/32 "	R42R55119	R42R55118	R4066587	R4090018P	R4111860[118]	R4122388	R4577169[127]	R4577169
R44141382[45]	3-3/32 "	R42R55119	R42R55118	R4066587	R4090018P	R4111860[118]	R4122388	R4577316[128]	R4577317
R44141382[45]	3-3/32 "	R42R55119	R42R55118	R4066587	R4090018P	R4113041[309]	R4122934	R4577169[127]	R4577169
R44141382[45]	3-3/32 "	R42R55119	R42R55118	R4066587	R4090018P	R4111583[119]	R4122598	R4577316[128]	R4577317
R44141382[45]	3-3/32 "	R42R55119	R42R55118	R4066587	R4090018P	R4111583[119]	R4122598	R4577169[127]	R4577169
R44141193[89]	3-3/32 "	R42R55119	R42R55118	R4066587	R4090018P	R4111860[118]	R4122388	R4577316[128]	R4577317
R44141193[89]	3-3/32 "	R42R55119	R42R55118	R4066587	R4090018P	R4113041[309]	R4122934	R4577316[128]	R4577317
R44141193[89]	3-3/32 "	R42R55119	R42R55118	R4066587	R4090018P	R4111860[118]	R4122388	R4577169[127]	R4577169
R44141193[89]	3-3/32 "	R42R55119	R42R55118	R4066587	R4090018P	R4113041[309]	R4122934	R4577169[127]	R4577169
R44141193[89]	3-3/32 "	R42R55119	R42R55118	R4066587	R4090018P	R4111583[119]	R4122598	R4577316[128]	R4577317
R44141193[89]	3-3/32 "	R42R55119	R42R55118	R4066587	R4090018P	R4113041[309]	R4122934	R4577169[127]	R4577169
R44141193[89]	3-3/32 "	R42R55119	R42R55118	R4066587	R4090018P	R4113041[309]	R4122934	R4577316[128]	R4577317
R44141193[89]	3-3/32 "	R42R55119	R42R55118	R4066587	R4090018P	R4111860[118]	R4122388	R4577169[127]	R4577169
R44141193[89]	3-3/32 "	R42R55119	R42R55118	R4066587	R4090018P	R4111583[119]	R4122598	R4577169[127]	R4577169
R44141193[89]	3-3/32 "	R42R55119	R42R55118	R4066587	R4090018P	R4111583[119]	R4122598	R4577316[128]	R4577317
R44141193[89]	3-3/32 "	R42R55119	R42R55118	R4066587	R4090018P	R4111860[118]	R4122388	R4577316[128]	R4577317
R44141193[89]	3-3/32 "	R42R55119	R42R55118	R4066587	R4090018P	R4111583[119]	R4122598	R4577169[127]	R4577169
R44140267[79]	1 "	R4133005	R4133005	R4166822	NR	-	-	R4577315	R4577315
R44140267[79]	7/8 "	R4133627	R4133628	R4166820	NR	-	-	R4577315	R4577315
R44140542	7/8 "	R4133627	R4133628	R4166820	NR	-	-	R4577315	R4577315
R44140542	1-1/8 "	R4133206	R4133206	R4166935	NR	-	-	R4577315	R4577315
R44140542	1 "	R4133005	R4133005	R4166822	NR	-	-	R4577315	R4577315
R44140547[84]	7/8 "	R4133627	R4133628	R4166820	NR	-	-	R4577315	R4577315
R44140547[84]	1 "	R4133005	R4133005	R4166822	NR	-	-	R4577315	R4577315
R44140264[333]	7/8 "	R4133627	R4133628	R4166820	NR	-	-	R4577315	R4577315
R44140264[333]	1 "	R4133005	R4133005	R4166822	NR	-	-	R4577315	R4577315
R44140264[333]	1-1/8 "	R4133206	R4133206	R4166935	NR	-	-	R4577315	R4577315
R44141382[45]	3-3/32 "	R42R55119	R42R55118	R4066587	R4090018P	R4111860[118]	R4122388	R4577169[127]	R4577169
R44141382[45]	3-3/32 "	R42R55119	R42R55118	R4066587	R4090018P	R4111583[119]	R4122598	R4577169[127]	R4577169
R44141382[45]	3-3/32 "	R42R55119	R42R55118	R4066587	R4090018P	R4113041[309]	R4122934	R4577169[127]	R4577169
R44141382[45]	3-3/32 "	R42R55119	R42R55118	R4066587	R4090018P	R4113041[309]	R4122934	R4577316[128]	R4577317
R44141382[45]	3-3/32 "	R42R55119	R42R55118	R4066587	R4090018P	R4111860[118]	R4122388	R4577316[128]	R4577317
R44141382[45]	3-3/32 "	R42R55119	R42R55118	R4066587	R4090018P	R4111583[119]	R4122598	R4577316[128]	R4577317
R44141193[89]	3-3/32 "	R42R55119	R42R55118	R4066587	R4090018P	R4111860[118]	R4122388	R4577169[127]	R4577169
R44141193[89]	3-3/32 "	R42R55119	R42R55118	R4066587	R4090018P	R4111583[119]	R4122598	R4577316[128]	R4577317
R44141193[89]	3-3/32 "	R42R55119	R42R55118	R4066587	R4090018P	R4111860[118]	R4122388	R4577169[127]	R4577169
R44141193[89]	3-3/32 "	R42R55119	R42R55118	R4066587	R4090018P	R4111860[118]	R4122388	R4577316[128]	R4577317
R44141193[89]	3-3/32 "	R42R55119	R42R55118	R4066587	R4090018P	R4113041[309]	R4122934	R4577316[128]	R4577317
R44141193[89]	3-3/32 "	R42R55119	R42R55118	R4066587	R4090018P	R4111860[118]	R4122388	R4577316[128]	R4577317
R44141193[89]	3-3/32 "	R42R55119	R42R55118	R4066587	R4090018P	R4113041[309]	R4122934	R4577169[127]	R4577169

309 - Power Brakes, Hydroboost

333 - Except 9 1/4" Ring Gear

MAKE MODEL YEAR AXLE CODE AXLE WEIGHT	AXLE & BRK. TYPE	BRK. MFG.	BRAKE SIZE	FMSI	MERITOR DISC PAD OR BRAKE SHOE	MERITOR GUIDE PIN OR RETURN SPRING KIT	MERITOR CALIPER HWD. KIT OR RETURN SPRING KIT	MERITOR ADJUSTER KIT (LEFT WHEEL)	MERITOR ADJUSTER KIT (RIGHT WHEEL)
DODGE(Cont.)									
B300, B350, PB300, PB350 SERIES VAN - 1TON(Cont.)									
1983									
	Fd	KH		7179 - D269	MD269	NR	R40H5516	NR	NR
	Fd	KH		7179 - D269	MD269	NR	R40H5516	NR	NR
	Fd	KH		7179 - D269	MD269	NR	R40H5516	NR	NR
	Fd	KH		7179 - D269	MD269	NR	R40H5516	NR	NR
	Fd	KH		7179 - D269	MD269	NR	R40H5516	NR	NR
5,500 lb.	Ra	BX	12 " x 2-1/2 "	2146AT - 357	R46357	R40H547	R40H4087	R40H2598	R40H2599
	Ra	BX	12 " x 2-1/2 "	2146AT - 357	R46357	R40H547	R40H4087	R40H2598	R40H2599
9,000 lb. GVW	Ra	BX	12 " x 3 "	2140AT - 358	R46358	R40H547	R40H4087	R40H2598	R40H2599
	Ra	BX	12 " x 3 "	2140AT - 358	R46358	R40H547	R40H4087	R40H2598	R40H2599
	Ra	BX	12 " x 3 "	2140AT - 358	R46358	R40H547	R40H4087	R40H2598	R40H2599
1982									
	Ra	BX	12 " x 2-1/2 "	2146AT - 357	R46357	R40H547	R40H4087	R40H2598	R40H2599
	Ra	BX	12 " x 2-1/2 "	2146AT - 357	R46357	R40H547	R40H4087	R40H2598	R40H2599
	Ra	BX	12 " x 3 "	2140AT - 358	R46358	R40H547	R40H4087	R40H2598	R40H2599
	Ra	BX	12 " x 3 "	2140AT - 358	R46358	R40H547	R40H4087	R40H2598	R40H2599
	Ra	BX	12 " x 3 "	2140AT - 358	R46358	R40H547	R40H4087	R40H2598	R40H2599
3,600 lb.	Fd	KH		7179 - D269	MD269	NR	R40H5516	NR	NR
	Fd	KH		7179 - D269	MD269	NR	R40H5516	NR	NR
	Fd	KH		7179 - D269	MD269	NR	R40H5516	NR	NR
	Fd	KH		7179 - D269	MD269	NR	R40H5516	NR	NR
	Fd	KH		7179 - D269	MD269	NR	R40H5516	NR	NR
	Fd	KH		7179 - D269	MD269	NR	R40H5516	NR	NR
4,000 lb.	Fd	KH		7179 - D269	MD269	NR	R40H5516	NR	NR
	Fd	KH		7179 - D269	MD269	NR	R40H5516	NR	NR
	Fd	KH		7179 - D269	MD269	NR	R40H5516	NR	NR
	Fd	KH		7179 - D269	MD269	NR	R40H5516	NR	NR
	Fd	KH		7179 - D269	MD269	NR	R40H5516	NR	NR
	Fd	KH		7179 - D269	MD269	NR	R40H5516	NR	NR
	Fd	KH		7179 - D269	MD269	NR	R40H5516	NR	NR
	Fd	KH		7179 - D269	MD269	NR	R40H5516	NR	NR
	Fd	KH		7179 - D269	MD269	NR	R40H5516	NR	NR
	Fd	KH		7179 - D269	MD269	NR	R40H5516	NR	NR
	Fd	KH		7179 - D269	MD269	NR	R40H5516	NR	NR
	Fd	KH		7179 - D269	MD269	NR	R40H5516	NR	NR
5,500 lb.	Ra	BX	12 " x 2-1/2 "	2146AT - 357	R46357	R40H547	R40H4087	R40H2598	R40H2599
	Ra	BX	12 " x 2-1/2 "	2146AT - 357	R46357	R40H547	R40H4087	R40H2598	R40H2599
9,000 lb. GVW	Ra	BX	12 " x 3 "	2140AT - 358	R46358	R40H547	R40H4087	R40H2598	R40H2599
	Ra	BX	12 " x 3 "	2140AT - 358	R46358	R40H547	R40H4087	R40H2598	R40H2599
	Ra	BX	12 " x 3 "	2140AT - 358	R46358	R40H547	R40H4087	R40H2598	R40H2599
1981									
	Ra	BX	12 " x 2-1/2 "	2146AT - 357	R46357	R40H547	R40H4087	R40H2598	R40H2599
	Ra	BX	12 " x 2-1/2 "	2146AT - 357	R46357	R40H547	R40H4087	R40H2598	R40H2599
	Ra	BX	12 " x 2-1/2 "	2146AT - 357	R46357	R40H547	R40H4087	R40H2598	R40H2599
	Ra	BX	12 " x 3 "	2140AT - 358	R46358	R40H547	R40H4087	R40H2598	R40H2599
	Ra	BX	12 " x 3 "	2140AT - 358	R46358	R40H547	R40H4087	R40H2598	R40H2599
	Ra	BX	12.125 x 2 "	2075T - 33A	N/A	R40H547	R40H4087	R40H2598	R40H2599
3,600 lb.	Fd			7019E - D123	MD269	NR	R40H5516	NR	NR
4,000 lb.	Fd	KH		7019E - D123	MD269	NR	R40H5516	NR	NR
	Fd	KH		7019E - D123	MD269	NR	R40H5516	NR	NR
9,000 lb. GVW	Ra	BX	12 " x 3 "	2140AT - 358	R46358	R40H547	R40H4087	R40H2598	R40H2599
1980									
	Ra	BX	12 " x 2-1/2 "	2146AT - 357	R46357	R40H547	R40H4087	R40H2598	R40H2599
	Ra	BX	12 " x 2-1/2 "	2146AT - 357	R46357	R40H547	R40H4087	R40H2598	R40H2599
	Ra	BX	12 " x 2-1/2 "	2146AT - 357	R46357	R40H547	R40H4087	R40H2598	R40H2599
	Ra	BX	12 " x 3 "	2140AT - 358	R46358	R40H547	R40H4087	R40H2598	R40H2599
	Ra	BX	12 " x 3 "	2140AT - 358	R46358	R40H547	R40H4087	R40H2598	R40H2599
	Ra	BX	12.125 x 2 "	2075T - 33A	N/A	R40H547	R40H4087	R40H2598	R40H2599
3,600 lb.	Fd			7019E - D123	MD269	NR	R40H5516	NR	NR
4,000 lb.	Fd	KH		7019E - D123	MD269	NR	R40H5516	NR	NR
	Fd	KH		7019E - D123	MD269	NR	R40H5516	NR	NR
9,000 lb. GVW	Ra	BX	12 " x 3 "	2140AT - 358	R46358	R40H547	R40H4087	R40H2598	R40H2599
1979									
	Ra	BX	12 " x 2-1/2 "	2146AT - 357	R46357	R40H547	R40H4087	R40H2598	R40H2599
	Ra	BX	12 " x 2-1/2 "	2146AT - 357	R46357	R40H547	R40H4087	R40H2598	R40H2599

45 - R44141382 is a hub & rotor, for rotor only use R44141193
89 - Rotor Only with 1/2" Studs
127 - Anchor
79 - Inboard Mounting
118 - Gasoline Engine, Power Brakes, Plastic Reservior
128 - Bracket
84 - 9 1/4" Ring Gear, Heavy Duty Axle
119 - Power Brakes, School Bus
309 - Power Brakes, Hydroboost

MERITOR DRUM OR ROTOR NO.	CALIPER OR CYLINDER BORE SIZE	MERITOR CALIPER OR WHEEL CYLINDER (LEFT)	MERITOR CALIPER OR WHEEL CYLINDER (RIGHT)	MERITOR CALIPER OR WHEEL CYLINDER REPAIR KIT	MERITOR CALIPER PISTON	MERITOR MASTER CYLINDER	MERITOR MASTER CYLINDER KIT	MERITOR BRAKE HOSE (LEFT)	MERITOR BRAKE HOSE (RIGHT)
									DODGE(Cont.)
									B300, B350, PB300, PB350 SERIES VAN - 1TON(Cont.)
R44141193[89]	3-3/32 "	R42R55119	R42R55118	R4066587	R4090018P	R4111583[119]	R4122598	R4577316[128]	R4577317
R44141193[89]	3-3/32 "	R42R55119	R42R55118	R4066587	R4090018P	R4113041[309]	R4122934	R4577169[127]	R4577169
R44141193[89]	3-3/32 "	R42R55119	R42R55118	R4066587	R4090018P	R4111583[119]	R4122598	R4577169[127]	R4577169
R44141193[89]	3-3/32 "	R42R55119	R42R55118	R4066587	R4090018P	R4111583[119]	R4122598	R4577169[127]	R4577169
R44141193[89]	3-3/32 "	R42R55119	R42R55118	R4066587	R4090018P	R4113041[309]	R4122934	R4577316[128]	R4577317
R44140267[79]	1 "	R4133005	R4133005	R4166822	NR	-	-	R4577315	R4577315
R44140267[79]	7/8 "	R4133627	R4133628	R4166820	NR	-	-	R4577315	R4577315
R44140542	1 "	R4133005	R4133005	R4166822	NR	-	-	R4577315	R4577315
R44140542	1-1/8 "	R4133206	R4133206	R4166935	NR	-	-	R4577315	R4577315
R44140542	7/8 "	R4133627	R4133628	R4166820	NR	-	-	R4577315	R4577315
R44140547[84]	1 "	R4133005	R4133005	R4166822	NR	-	-	R4577315	R4577315
R44140547[84]	7/8 "	R4133627	R4133628	R4166820	NR	-	-	R4577315	R4577315
R44140264[333]	7/8 "	R4133627	R4133628	R4166820	NR	-	-	R4577315	R4577315
R44140264[333]	1 "	R4133005	R4133005	R4166822	NR	-	-	R4577315	R4577315
R44140264[333]	1-1/8 "	R4133206	R4133206	R4166935	NR	-	-	R4577315	R4577315
R44141382[45]	3-3/32 "	R42R55119	R42R55118	R4066587	R4090018P	R4113041[309]	R4122934	R4577316[128]	R4577317
R44141382[45]	3-3/32 "	R42R55119	R42R55118	R4066587	R4090018P	R4111583[119]	R4122598	R4577316[128]	R4577317
R44141382[45]	3-3/32 "	R42R55119	R42R55118	R4066587	R4090018P	R4111860[118]	R4122388	R4577316[128]	R4577317
R44141382[45]	3-3/32 "	R42R55119	R42R55118	R4066587	R4090018P	R4113041[309]	R4122934	R4577169[127]	R4577169
R44141382[45]	3-3/32 "	R42R55119	R42R55118	R4066587	R4090018P	R4111860[118]	R4122388	R4577169[127]	R4577169
R44141382[45]	3-3/32 "	R42R55119	R42R55118	R4066587	R4090018P	R4111583[119]	R4122598	R4577169[127]	R4577169
R44141193[89]	3-3/32 "	R42R55119	R42R55118	R4066587	R4090018P	R4111860[118]	R4122388	R4577316[128]	R4577317
R44141193[89]	3-3/32 "	R42R55119	R42R55118	R4066587	R4090018P	R4111583[119]	R4122598	R4577169[127]	R4577169
R44141193[89]	3-3/32 "	R42R55119	R42R55118	R4066587	R4090018P	R4113041[309]	R4122934	R4577169[127]	R4577169
R44141193[89]	3-3/32 "	R42R55119	R42R55118	R4066587	R4090018P	R4111583[119]	R4122598	R4577169[127]	R4577169
R44141193[89]	3-3/32 "	R42R55119	R42R55118	R4066587	R4090018P	R4113041[309]	R4122934	R4577316[128]	R4577317
R44141193[89]	3-3/32 "	R42R55119	R42R55118	R4066587	R4090018P	R4111860[118]	R4122388	R4577169[127]	R4577169
R44141193[89]	3-3/32 "	R42R55119	R42R55118	R4066587	R4090018P	R4111860[118]	R4122388	R4577169[127]	R4577169
R44141193[89]	3-3/32 "	R42R55119	R42R55118	R4066587	R4090018P	R4113041[309]	R4122934	R4577169[127]	R4577169
R44141193[89]	3-3/32 "	R42R55119	R42R55118	R4066587	R4090018P	R4111860[118]	R4122388	R4577316[128]	R4577317
R44141193[89]	3-3/32 "	R42R55119	R42R55118	R4066587	R4090018P	R4111583[119]	R4122598	R4577316[128]	R4577317
R44141193[89]	3-3/32 "	R42R55119	R42R55118	R4066587	R4090018P	R4111583[119]	R4122598	R4577316[128]	R4577317
R44141193[89]	3-3/32 "	R42R55119	R42R55118	R4066587	R4090018P	R4113041[309]	R4122934	R4577316[128]	R4577317
R44140267[79]	7/8 "	R4133627	R4133628	R4166820	NR	-	-	R4577315	R4577315
R44140267[79]	1 "	R4133005	R4133005	R4166822	NR	-	-	R4577315	R4577315
R44140542	1 "	R4133005	R4133005	R4166822	NR	-	-	R4577315	R4577315
R44140542	7/8 "	R4133627	R4133628	R4166820	NR	-	-	R4577315	R4577315
R44140542	1-1/8 "	R4133206	R4133206	R4166935	NR	-	-	R4577315	R4577315
R44140267[79]	1-1/16 "	R4133792	R 418162	N/A	NR	-	-	R4577315	R4577315
R44140267[79]	7/8 "	R4133627	R4133628	N/A	NR	-	-	R4577315	R4577315
R44140267[79]	1 "	R4133004	R4133004	R4166822	NR	-	-	R4577315	R4577315
R44140264[333]	1-1/16 "	R4133791	R 418145	R4166821	NR	-	-	R4577315	R4577315
R44140264[333]	7/8 "	R4133627	R4133628	N/A	NR	-	-	R4577315	R4577315
N/A	7/8 "	R4133627	R4133628	N/A	NR	-	-	R4577315	R4577315
R44141382[45]	3-3/32 "	R42R55119	R42R55118	R4066587	R4090018P	R4111860[118]	R4122388	R4577173	R4577172
R44141089[405]	3-3/32 "	R42R55119	R42R55118	R4066587	R4090018P	R4111860[118]	R4122388	R4577173	R4577172
R44141193[89]	3-3/32 "	R42R55119	R42R55118	R4066587	R4090018P	R4111860[118]	R4122388	R4577173	R4577172
R44140542	1 "	R4133004	R4133004	R4166822	NR	-	-	R4577315	R4577315
R44140267[79]	1 "	R4133004	R4133004	R4166822	NR	-	-	R4577315	R4577315
R44140267[79]	7/8 "	R4133627	R4133628	N/A	NR	-	-	R4577315	R4577315
R44140267[79]	1-1/16 "	R4133792	R 418162	N/A	NR	-	-	R4577315	R4577315
R44140264[333]	1-1/16 "	R4133791	R 418145	R4166821	NR	-	-	R4577315	R4577315
R44140264[333]	7/8 "	R4133627	R4133628	N/A	NR	-	-	R4577315	R4577315
N/A	7/8 "	R4133627	R4133628	N/A	NR	-	-	R4577315	R4577315
R44141382[45]	3-3/32 "	R42R55119	R42R55118	R4066587	R4090018P	R4111860[118]	R4122388	R4577173	R4577172
R44141089[405]	3-3/32 "	R42R55119	R42R55118	R4066587	R4090018P	R4111860[118]	R4122388	R4577173	R4577172
R44141193[89]	3-3/32 "	R42R55119	R42R55118	R4066587	R4090018P	R4111860[118]	R4122388	R4577173	R4577172
R44140542	1 "	R4133004	R4133004	R4166822	NR	-	-	R4577315	R4577315
R44140267[79]	7/8 "	R4133627	R4133628	N/A	NR	-	-	R4577315	R4577315
R44140267[79]	1-1/16 "	R4133792	R 418162	N/A	NR	-	-	R4577315	R4577315

333 - Except 9 1/4" Ring Gear

405 - Rotor Only

MAKE MODEL YEAR AXLE CODE AXLE WEIGHT	AXLE & BRK. TYPE	BRK. MFG.	BRAKE SIZE	FMSI	MERITOR DISC PAD OR BRAKE SHOE	MERITOR GUIDE PIN OR RETURN SPRING KIT	MERITOR CALIPER HWD. KIT OR RETURN SPRING KIT	MERITOR ADJUSTER KIT (LEFT WHEEL)	MERITOR ADJUSTER KIT (RIGHT WHEEL)
DODGE(Cont.)									
B300, B350, PB300, PB350 SERIES VAN - 1TON(Cont.)									
1979									
	Ra	BX	12 " x 2-1/2 "	2146AT - 357	R46357	R40H547	R40H4087	R40H2598	R40H2599
	Ra	BX	12 " x 3 "	2140AT - 358	R46358	R40H547	R40H4087	R40H2598	R40H2599
	Ra	BX	12 " x 3 "	2140AT - 358	R46358	R40H547	R40H4087	R40H2598	R40H2599
	Ra	BX	12.125 x 2 "	2075T - 33A	N/A	R40H547	R40H4087	R40H2598	R40H2599
3,600 lb.	Fd			7019E - D123	MD269	NR	R40H5516	NR	NR
4,000 lb.	Fd	KH		7019E - D123	MD269	NR	R40H5516	NR	NR
	Fd	KH		7019E - D123	MD269	NR	R40H5516	NR	NR
9,000 lb. GVW	Ra	BX	12 " x 3 "	2140AT - 358	R46358	R40H547	R40H4087	R40H2598	R40H2599
1978									
	Ra	BX	12 " x 2-1/2 "	2146AT - 357	R46357	R40H547	R40H4087	R40H2598	R40H2599
	Ra	BX	12 " x 2-1/2 "	2146AT - 357	R46357	R40H547	R40H4087	R40H2598	R40H2599
	Ra	BX	12 " x 2-1/2 "	2146AT - 357	R46357	R40H547	R40H4087	R40H2598	R40H2599
	Ra	BX	12 " x 3 "	2140AT - 358	R46358	R40H547	R40H4087	R40H2598	R40H2599
	Ra	BX	12 " x 3 "	2140AT - 358	R46358	R40H547	R40H4087	R40H2598	R40H2599
	Ra	BX	12.125 x 2 "	2075T - 33A	N/A	R40H547	R40H4087	R40H2598	R40H2599
3,600 lb.	Fd			7019E - D123	MD269	NR	R40H5516	NR	NR
4,000 lb.	Fd	KH		7019E - D123	MD269	NR	R40H5516	NR	NR
	Fd	KH		7019E - D123	MD269	NR	R40H5516	NR	NR
9,000 lb. GVW	Ra	BX	12 " x 3 "	2140AT - 358	R46358	R40H547	R40H4087	R40H2598	R40H2599
1977									
Dual Rear Wheels	Fd	KH		7179 - D269	MD269	NR	R40H5516	NR	NR
Single Rear Wheels	Fd	KH		7179 - D269	MD269	NR	R40H5516	NR	NR
1976									
Dual Rear Wheels	Fd	KH		7179 - D269	MD269	NR	R40H5516	NR	NR
Single Rear Wheels	Fd	KH		7179 - D269	MD269	NR	R40H5516	NR	NR
1975									
Dual Rear Wheels	Fd	KH		7179 - D269	MD269	NR	R40H5516	NR	NR
Single Rear Wheels	Fd	KH		7179 - D269	MD269	NR	R40H5516	NR	NR
1974									
Dual Rear Wheels	Fd	KH		7179 - D269	MD269	NR	R40H5516	NR	NR
Single Rear Wheels	Fd	KH		7179 - D269	MD269	NR	R40H5516	NR	NR
1973									
	Fa	BX	12 " x 3 "	2140AT - 358	R46358	R40H547	R40H4087	R40H2598	R40H2599
Dual Rear Wheels	Fd	KH		7179 - D269	MD269	NR	R40H5516	NR	NR
Single Rear Wheels	Fd	KH		7179 - D269	MD269	NR	R40H5516	NR	NR
1972									
	Fa	BX	12 " x 3 "	2140AT - 358	R46358	R40H547	R40H4087	R40H2598	R40H2599
	Fd	KH		781 - D39	NLA	NLA	R407991	NR	NR
1971									
	Fa	BX	12 " x 3 "	2140AT - 358	R46358	R40H547	R40H4087	R40H2598	R40H2599
1970									
	Fa	BX	12 " x 3 "	2140AT - 358	R46358	R40H547	R40H4087	R40H2598	R40H2599
D200, D250, PD200, PD250, RD250 SERIES PICKUP-3/4 TON									
1993									
	Ra	BX	11 " x 2-1/2 "	2025T - 446	R46446	R40H111	R40H7133	R40H2534	R40H2535
	Ra	BX	12 " x 2-1/2 "	2146AT - 357	R46357	R40H547	R40H4087	R40H2598	R40H2599
	Ra	BX	11 " x 2-1/2 "	2025T - 446	R46446	R40H111	R40H4030DP	R40H2534	R40H2535
3,300 lb.	Fd	KH		7179 - D269	MD269	NR	R40H5516	NR	NR
4,000 lb.	Fd	KH		7179 - D269	MD269	NR	R40H5516	NR	NR
5,500, 5,800 lb.	Ra	BX	12 " x 2-1/2 "	2146AT - 357	R46357	R40H547	R40H4087	R40H2598	R40H2599
1992									
	Ra	BX	11 " x 2-1/2 "	2025T - 446	R46446	R40H111	R40H7133	R40H2534	R40H2535
	Ra	BX	12 " x 2-1/2 "	2146AT - 357	R46357	R40H547	R40H4087	R40H2598	R40H2599
	Ra	BX	11 " x 2-1/2 "	2025T - 446	R46446	R40H111	R40H4030DP	R40H2534	R40H2535
3,300 lb.	Fd	KH		7179 - D269	MD269	NR	R40H5516	NR	NR
4,000 lb.	Fd	KH		7179 - D269	MD269	NR	R40H5516	NR	NR
5,500, 5,800 lb.	Ra	BX	12 " x 2-1/2 "	2146AT - 357	R46357	R40H547	R40H4087	R40H2598	R40H2599
1991									
	Ra	BX	11 " x 2-1/2 "	2025T - 446	R46446	R40H111	R40H4030DP	R40H2534	R40H2535
	Ra	BX	11 " x 2-1/2 "	2025T - 446	R46446	R40H111	R40H7133	R40H2534	R40H2535
	Ra	BX	12 " x 2-1/2 "	2146AT - 357	R46357	R40H547	R40H4087	R40H2598	R40H2599
3,300 lb.	Fd	KH		7179 - D269	MD269	NR	R40H5516	NR	NR

45 - R44141382 is a hub & rotor, for rotor only use R44141193
83 - 5" Bolt Circle
118 - Gasoline Engine, Power Brakes, Plastic Reservior
53 - Power Brakes
84 - 9 1/4" Ring Gear, Heavy Duty Axle
127 - Anchor
79 - Inboard Mounting
89 - Rotor Only with 1/2" Studs
333 - Except 9 1/4" Ring Gear

MERITOR DRUM OR ROTOR NO.	CALIPER OR CYLINDER BORE SIZE	MERITOR CALIPER OR WHEEL CYLINDER (LEFT)	MERITOR CALIPER OR WHEEL CYLINDER (RIGHT)	MERITOR CALIPER OR WHEEL CYLINDER REPAIR KIT	MERITOR CALIPER PISTON	MERITOR MASTER CYLINDER	MERITOR MASTER CYLINDER KIT	MERITOR BRAKE HOSE (LEFT)	MERITOR BRAKE HOSE (RIGHT)
									DODGE(Cont.)
									B300, B350, PB300, PB350 SERIES VAN - 1TON(Cont.)
R44140267[79]	1 "	R4133004	R4133004	R4166822	NR	-	-	R4577315	R4577315
R44140264[333]	7/8 "	R4133627	R4133628	N/A	NR	-	-	R4577315	R4577315
R44140264[333]	1-1/16 "	R4133791	R 418145	R4166821	NR	-	-	R4577315	R4577315
N/A	7/8 "	R4133627	R4133628	N/A	NR	-	-	R4577315	R4577315
R44141382[45]	3-3/32 "	R42R55119	R42R55118	R4066587	R4090018P	R4111860[118]	R4122388	R4577173	R4577172
R44141193[89]	3-3/32 "	R42R55119	R42R55118	R4066587	R4090018P	R4111860[118]	R4122388	R4577173	R4577172
R44141089[405]	3-3/32 "	R42R55119	R42R55118	R4066587	R4090018P	R4111860[118]	R4122388	R4577173	R4577172
R44140542	1 "	R4133004	R4133004	R4166822	NR	-	-	R4577315	R4577315
R44140267[79]	1-1/16 "	R4133792	R 418162	N/A	NR	-	-	R4577315	R4577315
R44140267[79]	1 "	R4133004	R4133004	R4166822	NR	-	-	R4577315	R4577315
R44140267[79]	7/8 "	R4133627	R4133628	N/A	NR	-	-	R4577315	R4577315
R44140264[333]	1-1/16 "	R4133791	R 418145	R4166821	NR	-	-	R4577315	R4577315
R44140264[333]	7/8 "	R4133627	R4133628	N/A	NR	-	-	R4577315	R4577315
N/A	7/8 "	R4133627	R4133628	N/A	NR	-	-	R4577315	R4577315
R44141382[45]	3-3/32 "	R42R55119	R42R55118	R4066587	R4090018P	R4111860[118]	R4122388	R4577173	R4577172
R44141193[89]	3-3/32 "	R42R55119	R42R55118	R4066587	R4090018P	R4111860[118]	R4122388	R4577173	R4577172
R44141089[405]	3-3/32 "	R42R55119	R42R55118	R4066587	R4090018P	R4111860[118]	R4122388	R4577173	R4577172
R44140542	1 "	R4133004	R4133004	R4166822	NR	-	-	R4577315	R4577315
R44141089[405]	3-3/32 "	R42R55119	R42R55118	R4066587	R4090018P	-	-	-	-
-	3-3/32 "	R42R55119	R42R55118	R4066587	R4090018P	-	-	-	-
R44141089[405]	3-3/32 "	R42R55119	R42R55118	R4066587	R4090018P	-	-	-	-
-	3-3/32 "	R42R55119	R42R55118	R4066587	R4090018P	-	-	-	-
R44141089[405]	3-3/32 "	R42R55119	R42R55118	R4066587	R4090018P	-	-	-	-
-	3-3/32 "	R42R55119	R42R55118	R4066587	R4090018P	-	-	-	-
R44141089[405]	3-3/32 "	R42R55119	R42R55118	R4066587	R4090018P	-	-	-	-
-	3-3/32 "	R42R55119	R42R55118	R4066587	R4090018P	-	-	-	-
-		-	-	-	-	-	-	-	-
-	3-3/32 "	R42R55119	R42R55118	R4066587	R4090018P	-	-	-	-
-	3-3/32 "	R42R55119	R42R55118	R4066587	R4090018P	-	-	-	-
-		-	-	-	-	-	-	-	-
-		-	-	R4066851	R4090015S	-	-	-	-
-		-	-	-	-	-	-	-	-
-		-	-	-	-	-	-	-	-
									D200, D250, PD200, PD250, RD250 SERIES PICKUP-3/4 TON
R441404090[83]	1 "	R4133004	R4133004	R4166822	NR	-	-	-	-
R44140547[84]	1 "	R4133004	R4133004	R4166822	NR	-	-	-	-
R441404090[83]	7/8 "	R4133627	R4133628	R4166820	NR	-	-	-	-
R44141382[45]	3-3/32 "	R42R55119	R42R55118	R4066587	R4090018P	R4111775[53]	R4122596	R4577169[127]	R4577169
R44141663[405]	3-3/32 "	R42R55119	R42R55118	R4066587	R4090018P	R4111775[53]	R4122596	R4577169[127]	R4577169
R44140267[79]	7/8 "	R4133627	R4133628	R4166820	NR	-	-	-	-
R441404090[83]	1 "	R4133004	R4133004	R4166822	NR	-	-	-	-
R44140547[84]	1 "	R4133004	R4133004	R4166822	NR	-	-	-	-
R441404090[83]	7/8 "	R4133627	R4133628	R4166820	NR	-	-	-	-
R44141382[45]	3-3/32 "	R42R55119	R42R55118	R4066587	R4090018P	-	-	R4577169[127]	R4577169
R44141663[405]	3-3/32 "	R42R55119	R42R55118	R4066587	R4090018P	-	-	R4577169[127]	R4577169
R44140267[79]	7/8 "	R4133627	R4133628	R4166820	NR	-	-	-	-
R441404090[83]	7/8 "	R4133627	R4133628	R4166820	NR	-	-	-	-
R441404090[83]	1 "	R4133005	R4133005	R4166822	NR	-	-	-	-
R44140547[84]	1 "	R4133005	R4133005	R4166822	NR	-	-	-	-
R44141382[45]	3-3/32 "	R42R55119	R42R55118	R4066587	R4090018P	-	-	R4577169[127]	R4577169

405 - Rotor Only

MAKE MODEL YEAR AXLE CODE AXLE WEIGHT	AXLE & BRK. TYPE	BRK. MFG.	BRAKE SIZE	FMSI	MERITOR DISC PAD OR BRAKE SHOE	MERITOR GUIDE PIN OR RETURN SPRING KIT	MERITOR CALIPER HWD. KIT OR RETURN SPRING KIT	MERITOR ADJUSTER KIT (LEFT WHEEL)	MERITOR ADJUSTER KIT (RIGHT WHEEL)
DODGE(Cont.)									
D200, D250, PD200, PD250, RD250 SERIES PICKUP-3/4 TON(Cont.)									
1991 4,000 lb.	Fd	KH		7179 - D269	MD269	NR	R40H5516	NR	NR
5,500, 5,800 lb.	Ra	BX	12 " x 2-1/2 "	2146AT - 357	R46357	R40H547	R40H4087	R40H2598	R40H2599
1990									
	Ra	BX	11 " x 2-1/2 "	2025T - 446	R46446	R40H111	R40H7133	R40H2534	R40H2535
	Ra	BX	11 " x 2-1/2 "	2025T - 446	R46446	R40H111	R40H4030DP	R40H2534	R40H2535
	Ra	BX	12 " x 2-1/2 "	2146AT - 357	R46357	R40H547	R40H4087	R40H2598	R40H2599
3,300 lb.	Fd	KH		7179 - D269	MD269	NR	R40H5516	NR	NR
4,000 lb.	Fd	KH		7179 - D269	MD269	NR	R40H5516	NR	NR
5,500, 5,800 lb.	Ra	BX	12 " x 2-1/2 "	2146AT - 357	R46357	R40H547	R40H4087	R40H2598	R40H2599
1989									
	Ra	BX	12 " x 2-1/2 "	2146AT - 357	R46357	R40H547	R40H4087	R40H2598	R40H2599
	Ra	BX	12 " x 2-1/2 "	2146AT - 357	R46357	R40H547	R40H4087	R40H2598	R40H2599
	Ra	BX	12 " x 3 "	2140AT - 358	R46358	R40H547	R40H4087	R40H2598	R40H2599
	Ra	BX	12 " x 3 "	2140AT - 358	R46358	R40H547	R40H4087	R40H2598	R40H2599
Diesel Engine 3,300 lb.	Fd	KH		7179 - D269	MD269	NR	R40H5516	NR	NR
Diesel Engine 4,000 lb.	Fd	KH		7179 - D269	MD269	NR	R40H5516	NR	NR
1988									
	Ra	BX	12 " x 2-1/2 "	2146AT - 357	R46357	R40H547	R40H4087	R40H2598	R40H2599
	Ra	BX	12 " x 2-1/2 "	2146AT - 357	R46357	R40H547	R40H4087	R40H2598	R40H2599
	Ra	BX	12 " x 3 "	2140AT - 358	R46358	R40H547	R40H4087	R40H2598	R40H2599
	Ra	BX	12 " x 3 "	2140AT - 358	R46358	R40H547	R40H4087	R40H2598	R40H2599
Diesel Engine 3,300 lb.	Fd	KH		7179 - D269	MD269	NR	R40H5516	NR	NR
Diesel Engine 4,000 lb.	Fd	KH		7179 - D269	MD269	NR	R40H5516	NR	NR
1987									
	Ra	BX	12 " x 2-1/2 "	2146AT - 357	R46357	R40H547	R40H4087	R40H2598	R40H2599
	Ra	BX	12 " x 2-1/2 "	2146AT - 357	R46357	R40H547	R40H4087	R40H2598	R40H2599
	Ra	BX	12 " x 3 "	2140AT - 358	R46358	R40H547	R40H4087	R40H2598	R40H2599
	Ra	BX	12 " x 3 "	2140AT - 358	R46358	R40H547	R40H4087	R40H2598	R40H2599
Diesel Engine 3,300 lb.	Fd	KH		7179 - D269	MD269	NR	R40H5516	NR	NR
Diesel Engine 4,500 lb.	Fd	KH		7179 - D269	MD269	NR	R40H5516	NR	NR
1986									
	Ra	BX	12 " x 2-1/2 "	2146AT - 357	R46357	R40H547	R40H4087	R40H2598	R40H2599
	Ra	BX	12 " x 2-1/2 "	2146AT - 357	R46357	R40H547	R40H4087	R40H2598	R40H2599
	Ra	BX	12 " x 3 "	2140AT - 358	R46358	R40H547	R40H4087	R40H2598	R40H2599
	Ra	BX	12 " x 3 "	2140AT - 358	R46358	R40H547	R40H4087	R40H2598	R40H2599
Diesel Engine 3,300 lb.	Fd	KH		7179 - D269	MD269	NR	R40H5516	NR	NR
Diesel Engine 4,000 lb.	Fd	KH		7179 - D269	MD269	NR	R40H5516	NR	NR
4,500 lb.	Fd	KH		7179 - D269	MD269	NR	R40H5516	NR	NR
1985									
	Ra	BX	12 " x 2-1/2 "	2146AT - 357	R46357	R40H547	R40H4087	R40H2598	R40H2599
	Ra	BX	12 " x 2-1/2 "	2146AT - 357	R46357	R40H547	R40H4087	R40H2598	R40H2599
	Ra	BX	12 " x 3 "	2140AT - 358	R46358	R40H547	R40H4087	R40H2598	R40H2599
	Ra	BX	12 " x 3 "	2140AT - 358	R46358	R40H547	R40H4087	R40H2598	R40H2599
	Ra	BX	12 " x 3 "	2140AT - 358	R46358	R40H547	R40H4087	R40H2598	R40H2599
Diesel Engine 3,300 lb.	Fd	KH		7179 - D269	MD269	NR	R40H5516	NR	NR
Diesel Engine 4,000 lb.	Fd	KH		7179 - D269	MD269	NR	R40H5516	NR	NR
1984									
	Ra	BX	12 " x 2-1/2 "	2146AT - 357	R46357	R40H547	R40H4087	R40H2598	R40H2599
	Ra	BX	12 " x 2-1/2 "	2146AT - 357	R46357	R40H547	R40H4087	R40H2598	R40H2599
	Ra	BX	12 " x 3 "	2140AT - 358	R46358	R40H547	R40H4087	R40H2598	R40H2599
	Ra	BX	12 " x 3 "	2140AT - 358	R46358	R40H547	R40H4087	R40H2598	R40H2599
	Ra	BX	12 " x 3 "	2140AT - 358	R46358	R40H547	R40H4087	R40H2598	R40H2599
Diesel Engine 3,300 lb.	Fd	KH		7179 - D269	MD269	NR	R40H5516	NR	NR

45 - R44141382 is a hub & rotor, for rotor only use R44141193
79 - Inboard Mounting
118 - Gasoline Engine, Power Brakes, Plastic Reservior
52 - 18" Length
83 - 5" Bolt Circle
127 - Anchor
53 - Power Brakes
84 - 9 1/4" Ring Gear, Heavy Duty Axle
137 - Tee

MERITOR DRUM OR ROTOR NO.	CALIPER OR CYLINDER BORE SIZE	MERITOR CALIPER OR WHEEL CYLINDER (LEFT)	MERITOR CALIPER OR WHEEL CYLINDER (RIGHT)	MERITOR CALIPER OR WHEEL CYLINDER REPAIR KIT	MERITOR CALIPER PISTON	MERITOR MASTER CYLINDER	MERITOR MASTER CYLINDER KIT	MERITOR BRAKE HOSE (LEFT)	MERITOR BRAKE HOSE (RIGHT)
									DODGE(Cont.)
									D200, D250, PD200, PD250, RD250 SERIES PICKUP-3/4 TON(Cont.)
R44141663[405]	3-3/32 "	R42R55119	R42R55118	R4066587	R4090018P	-	-	R4577169[127]	R4577169
R44140267[79]	7/8 "	R4133627	R4133628	R4166820	NR	-	-	-	-
R441404090[83]	1 "	R4133005	R4133005	R4166822	NR	-	-	-	-
R441404090[83]	7/8 "	R4133627	R4133628	R4166820	NR	-	-	-	-
R44140547[84]	1 "	R4133005	R4133005	R4166822	NR	-	-	-	-
R44141382[45]	3-3/32 "	R42R55119	R42R55118	R4066587	R4090018P	R4111775[53]	R4122596	R4577169[127]	R4577169
R44141663[405]	3-3/32 "	R42R55119	R42R55118	R4066587	R4090018P	R4111775[53]	R4122596	R4577169[127]	R4577169
R44140267[79]	7/8 "	R4133627	R4133628	R4166820	NR	-	-	-	-
R44140547[84]	7/8 "	R4133627	R4133628	R4166820	NR	-	-	-	-
R44140547[84]	1 "	R4133005	R4133005	R4166822	NR	-	-	-	-
R44140264[333]	1 "	R4133005	R4133005	R4166822	NR	-	-	-	-
R44140264[333]	7/8 "	R4133627	R4133628	R4166820	NR	-	-	-	-
R44141382[45]	3-3/32 "	R42R55119	R42R55118	R4066587	R4090018P	R4111775[53]	R4122596	R4577169[127]	R4577169
R44141663[405]	3-3/32 "	R42R55119	R42R55118	R4066587	R4090018P	R4111775[53]	R4122596	R4577921[137]	N/A
R44140547[84]	1 "	R4133005	R4133005	R4166822	NR	-	-	-	-
R44140547[84]	7/8 "	R4133627	R4133628	R4166820	NR	-	-	-	-
R44140264[333]	1 "	R4133005	R4133005	R4166822	NR	-	-	-	-
R44140264[333]	7/8 "	R4133627	R4133628	R4166820	NR	-	-	-	-
R44141382[45]	3-3/32 "	R42R55119	R42R55118	R4066587	R4090018P	-	-	-	-
R44141663[405]	3-3/32 "	R42R55119	R42R55118	R4066587	R4090018P	-	-	-	-
R44140547[84]	7/8 "	R4133627	R4133628	R4166820	NR	-	-	-	-
R44140547[84]	1 "	R4133005	R4133005	R4166822	NR	-	-	-	-
R44140264[333]	7/8 "	R4133627	R4133628	R4166820	NR	-	-	-	-
R44140264[333]	1 "	R4133005	R4133005	R4166822	NR	-	-	-	-
R44141382[45]	3-3/32 "	R42R55119	R42R55118	R4066587	R4090018P	R4111860[118]	R4122388	-	-
R44141663[405]	3-3/32 "	R42R55119	R42R55118	R4066587	R4090018P	R4111775[53]	R4122596	-	-
R44140547[84]	1 "	R4133005	R4133005	R4166822	NR	-	-	-	-
R44140547[84]	7/8 "	R4133627	R4133628	R4166820	NR	-	-	-	-
R44140264[333]	1 "	R4133005	R4133005	R4166822	NR	-	-	-	-
R44140264[333]	7/8 "	R4133627	R4133628	R4166820	NR	-	-	-	-
R44141382[45]	3-3/32 "	R42R55119	R42R55118	R4066587	R4090018P	N/A[52]	R4122388	R4577169[127]	R4577169
R44141663[405]	3-3/32 "	R42R55119	R42R55118	R4066587	R4090018P	R4111860[118]	R4122388	R4577169[127]	R4577169
R44141663[405]	3-3/32 "	R42R55119	R42R55118	R4066587	R4090018P	R4111775[53]	R4122596	R4577169[127]	R4577169
R44140547[84]	7/8 "	R4133627	R4133628	R4166820	NR	-	-	-	-
R44140547[84]	1 "	R4133005	R4133005	R4166822	NR	-	-	-	-
R44140264[333]	1 "	R4133005	R4133005	R4166822	NR	-	-	-	-
R44140264[333]	7/8 "	R4133627	R4133628	R4166820	NR	-	-	-	-
R44140264[333]	1-1/16 "	R4133792	R 418162	R4166821	NR	-	-	-	-
R44141382[45]	3-3/32 "	R42R55119	R42R55118	R4066587	R4090018P	R4111860[118]	R4122388	R4577169[127]	R4577169
R44141663[405]	3-3/32 "	R42R55119	R42R55118	R4066587	R4090018P	R4111860[118]	R4122388	R4577169[127]	R4577169
R44140547[84]	7/8 "	R4133627	R4133628	R4166820	NR	-	-	-	-
R44140547[84]	1 "	R4133005	R4133005	R4166822	NR	-	-	-	-
R44140264[333]	1-1/16 "	R4133792	R 418162	R4166821	NR	-	-	-	-
R44140264[333]	7/8 "	R4133627	R4133628	R4166820	NR	-	-	-	-
R44140264[333]	1 "	R4133005	R4133005	R4166822	NR	-	-	-	-
R44141382[45]	3-3/32 "	R42R55119	R42R55118	R4066587	R4090018P	R4111860[118]	R4122388	R4577169[127]	R4577169

333 - Except 9 1/4" Ring Gear

405 - Rotor Only

MAKE MODEL YEAR AXLE CODE AXLE WEIGHT	AXLE & BRK. TYPE	BRK. MFG.	BRAKE SIZE	FMSI	MERITOR DISC PAD OR BRAKE SHOE	MERITOR GUIDE PIN OR RETURN SPRING KIT	MERITOR CALIPER HWD. KIT OR RETURN SPRING KIT	MERITOR ADJUSTER KIT (LEFT WHEEL)	MERITOR ADJUSTER KIT (RIGHT WHEEL)
DODGE(Cont.)									
D200, D250, PD200, PD250, RD250 SERIES PICKUP-3/4 TON(Cont.)									
1984 Diesel Engine 4,000 lb.	Fd	KH		7179 - D269	MD269	NR	R40H5516	NR	NR
1983	Fd	CH		7019 - D123	MD269	NR	R40H5516	NR	NR
	Fd	CH		7019 - D123	MD269	NR	R40H5516	NR	NR
	Ra	BX	12 " x 2-1/2 "	2146AT - 357	R46357	R40H547	R40H4087	R40H2598	R40H2599
	Ra	BX	12 " x 2-1/2 "	2146AT - 357	R46357	R40H547	R40H4087	R40H2598	R40H2599
	Ra	BX	12 " x 3 "	2140AT - 358	R46358	R40H547	R40H4087	R40H2598	R40H2599
1982	Fd	CH		7019 - D123	MD269	NR	R40H5516	NR	NR
	Ra	BX	12 " x 2-1/2 "	2146AT - 357	R46357	R40H547	R40H4087	R40H2598	R40H2599
	Ra	BX	12 " x 2-1/2 "	2146AT - 357	R46357	R40H547	R40H4087	R40H2598	R40H2599
	Ra	BX	12 " x 3 "	2140AT - 358	R46358	R40H547	R40H4087	R40H2598	R40H2599
1981	Fd	CH		7019 - D123	MD269	NR	R40H5516	NR	NR
	Ra	BX	12 " x 2-1/2 "	2146AT - 357	R46357	R40H547	R40H4087	R40H2598	R40H2599
	Ra	BX	12 " x 2-1/2 "	2146AT - 357	R46357	R40H547	R40H4087	R40H2598	R40H2599
	Ra	BX	12 " x 3 "	2140AT - 358	R46358	R40H547	R40H4087	R40H2598	R40H2599
1980	Fd	CH		7019 - D123	MD269	NR	R40H5516	NR	NR
	Ra	BX	12 " x 2-1/2 "	2146AT - 357	R46357	R40H547	R40H4087	R40H2598	R40H2599
	Ra	BX	12 " x 2-1/2 "	2146AT - 357	R46357	R40H547	R40H4087	R40H2598	R40H2599
	Ra	BX	12 " x 3 "	2140AT - 358	R46358	R40H547	R40H4087	R40H2598	R40H2599
	Ra	BX	12 " x 3 "	2140AT - 358	R46358	R40H547	R40H4087	R40H2598	R40H2599
	Ra	BX	12.125 x 2 "	2075A - 33	N/A	R40H130	N/A	N/A	N/A
1979	Fd	CH		7019 - D123	MD269	NR	R40H5516	NR	NR
	Ra	BX	12 " x 2-1/2 "	2146AT - 357	R46357	R40H547	R40H4087	R40H2598	R40H2599
	Ra	BX	12 " x 2-1/2 "	2146AT - 357	R46357	R40H547	R40H4087	R40H2598	R40H2599
	Ra	BX	12 " x 3 "	2140AT - 358	R46358	R40H547	R40H4087	R40H2598	R40H2599
	Ra	BX	12 " x 3 "	2140AT - 358	R46358	R40H547	R40H4087	R40H2598	R40H2599
	Ra	BX	12.125 x 2 "	2075A - 33	N/A	R40H130	N/A	N/A	N/A
1978	Fd	CH		7019 - D123	MD269	NR	R40H5516	NR	NR
	Ra	BX	12 " x 2-1/2 "	2146AT - 357	R46357	R40H547	R40H4087	R40H2598	R40H2599
	Ra	BX	12 " x 2-1/2 "	2146AT - 357	R46357	R40H547	R40H4087	R40H2598	R40H2599
	Ra	BX	12 " x 3 "	2140AT - 358	R46358	R40H547	R40H4087	R40H2598	R40H2599
	Ra	BX	12 " x 3 "	2140AT - 358	R46358	R40H547	R40H4087	R40H2598	R40H2599
	Ra	BX	12.125 x 2 "	2075A - 33	N/A	R40H130	N/A	N/A	N/A
1977	Fd	CH		7019 - D123	MD269	NR	R40H5516	NR	NR
	Ra	BX	12 " x 2-1/2 "	2146AT - 357	R46357	R40H547	R40H4087	R40H2598	R40H2599
	Ra	BX	12 " x 2-1/2 "	2146AT - 357	R46357	R40H547	R40H4087	R40H2598	R40H2599
	Ra	BX	12 " x 3 "	2140AT - 358	R46358	R40H547	R40H4087	R40H2598	R40H2599
	Ra	BX	12 " x 3 "	2140AT - 358	R46358	R40H547	R40H4087	R40H2598	R40H2599
	Ra	BX	12.125 x 2 "	2075A - 33	N/A	R40H130	NR	NR	NR
1976	Fd	CH		7019 - D123	MD269	NR	R40H5516	NR	NR
	Ra	BX	12 " x 2-1/2 "	2146AT - 357	R46357	R40H547	R40H4087	R40H2598	R40H2599
	Ra	BX	12 " x 2-1/2 "	2146AT - 357	R46357	R40H547	R40H4087	R40H2598	R40H2599
	Ra	BX	12 " x 3 "	2140AT - 358	R46358	R40H547	R40H4087	R40H2598	R40H2599
	Ra	BX	12 " x 3 "	2140AT - 358	R46358	R40H547	R40H4087	R40H2598	R40H2599
	Ra	BX	12.125 x 2 "	2075A - 33	N/A	R40H130	NR	NR	NR
1975	Fd	CH		7019 - D123	MD269	NR	R40H5516	NR	NR
	Ra	BX	12 " x 2-1/2 "	2146AT - 357	R46357	R40H547	R40H4087	R40H2598	R40H2599
	Ra	BX	12 " x 2-1/2 "	2146AT - 357	R46357	R40H547	R40H4087	R40H2598	R40H2599
	Ra	BX	12 " x 3 "	2140AT - 358	R46358	R40H547	R40H4087	R40H2598	R40H2599
	Ra	BX	12 " x 3 "	2140AT - 358	R46358	R40H547	R40H4087	R40H2598	R40H2599
	Ra	BX	12.125 x 2 "	2075A - 33	N/A	R40H130	NR	NR	NR
1974	Fd	CH		7019 - D123	MD269	NR	R40H5516	NR	NR
	Ra	BX	12 " x 2-1/2 "	2146AT - 357	R46357	R40H547	R40H4087	R40H2598	R40H2599

45 - R44141382 is a hub & rotor, for rotor only use R44141193
127 - Anchor
405 - Rotor Only
79 - Inboard Mounting
128 - Bracket
118 - Gasoline Engine, Power Brakes, Plastic Reservior
333 - Except 9 1/4" Ring Gear

MERITOR DRUM OR ROTOR NO.	CALIPER OR CYLINDER BORE SIZE	MERITOR CALIPER OR WHEEL CYLINDER (LEFT)	MERITOR CALIPER OR WHEEL CYLINDER (RIGHT)	MERITOR CALIPER OR WHEEL CYLINDER REPAIR KIT	MERITOR CALIPER PISTON	MERITOR MASTER CYLINDER	MERITOR MASTER CYLINDER KIT	MERITOR BRAKE HOSE (LEFT)	MERITOR BRAKE HOSE (RIGHT)
DODGE(Cont.)									
D200, D250, PD200, PD250, RD250 SERIES PICKUP-3/4 TON(Cont.)									
R44141663[405]	3-3/32 "	R42R55119	R42R55118	R4066587	R4090018P	R4111860[118]	R4122388	R4577169[127]	R4577169
R44141382[45]	3-3/32 "	R42R55119	R42R55118	R4066587	R4090018P	R4111860[118]	R4122388	R4577316[128]	R4577317
R44141382[45]	3-3/32 "	R42R55119	R42R55118	R4066587	R4090018P	R4111860[118]	R4122388	R4577169[127]	R4577169
R44140267[79]	7/8 "	R4133627	R4133628	R4166820	NR	-	-	-	-
R44140267[79]	1 "	R4133005	R4133004	R4166822	NR	-	-	-	-
R44140264[333]	1-1/16 "	R4133792	R 418162	R4166821	NR	-	-	-	-
R44141382[45]	3-3/32 "	R42R55119	R42R55118	R4066587	R4090018P	-	-	-	-
R44140267[79]	7/8 "	R4133627	R4133628	R4166820	NR	-	-	-	-
R44140267[79]	1 "	R4133005	R4133004	R4166822	NR	-	-	-	-
R44140264[333]	1-1/16 "	R4133792	R 418162	R4166821	NR	-	-	-	-
R44141382[45]	3-3/32 "	R42R55119	R42R55118	R4066587	R4090018P	-	-	-	-
R44140267[79]	1 "	R4133005	R4133004	R4166822	NR	-	-	-	-
R44140267[79]	7/8 "	R4133627	R4133628	R4166820	NR	-	-	-	-
R44140264[333]	1-1/16 "	R4133792	R 418162	R4166821	NR	-	-	-	-
R44141382[45]	3-3/32 "	R42R55119	R42R55118	R4066587	R4090018P	-	-	-	-
R44140267[79]	1 "	R4133005	R4133005	R4166822	NR	-	-	-	-
R44140267[79]		-	-	N/A	NR	-	-	-	-
R44140264[333]	1-1/16 "	R4133792	R 418162	R4166821	NR	-	-	-	-
R44140264[333]	1-1/16 "	R4133792	R 418162	R4166821	NR	-	-	-	-
N/A	7/8 "	R4133627	R4133628	R4166820	NR	-	-	-	-
R44141382[45]	3-3/32 "	R42R55119	R42R55118	R4066587	R4090018P	-	-	-	-
R44140267[79]	1 "	R4133005	R4133005	R4166822	NR	-	-	-	-
R44140267[79]		-	-	N/A	NR	-	-	-	-
R44140264[333]	1-1/16 "	R4133792	R 418162	R4166821	NR	-	-	-	-
R44140264[333]	1-1/16 "	R4133792	R 418162	R4166821	NR	-	-	-	-
N/A	7/8 "	R4133627	R4133628	R4166820	NR	-	-	-	-
R44141382[45]	3-3/32 "	R42R55119	R42R55118	R4066587	R4090018P	-	-	-	-
R44140267[79]		-	-	N/A	NR	-	-	-	-
R44140267[79]	1 "	R4133005	R4133005	R4166822	NR	-	-	-	-
R44140264[333]	1-1/16 "	R4133792	R 418162	R4166821	NR	-	-	-	-
R44140264[333]	1-1/16 "	R4133792	R 418162	R4166821	NR	-	-	-	-
N/A	7/8 "	R4133627	R4133628	R4166820	NR	-	-	-	-
-	3-3/32 "	R42R55119	R42R55118	R4066587	R4090018P	-	-	-	-
R44140267[79]		-	-	-	NR	-	-	-	-
R44140267[79]	1 "	R4133005	R4133004	R4166822	NR	-	-	-	-
R44140264[333]	1-1/16 "	R4133792	R 418162	R4166821	NR	-	-	-	-
R44140264[333]	1-1/16 "	R4133792	R 418162	R4166821	NR	-	-	-	-
-	7/8 "	R4133627	R4133628	R4166820	NR	-	-	-	-
-	3-3/32 "	R42R55119	R42R55118	R4066587	R4090018P	-	-	-	-
R44140267[79]		-	-	-	NR	-	-	-	-
R44140267[79]	1 "	R4133005	R4133004	R4166822	NR	-	-	-	-
R44140264[333]	1-1/16 "	R4133792	R 418162	R4166821	NR	-	-	-	-
R44140264[333]	1-1/16 "	R4133792	R 418162	R4166821	NR	-	-	-	-
-	7/8 "	R4133627	R4133628	R4166820	NR	-	-	-	-
-	3-3/32 "	R42R55119	R42R55118	R4066587	R4090018P	-	-	-	-
R44140267[79]		-	-	-	NR	-	-	-	-
R44140267[79]	1 "	R4133005	R4133004	R4166822	NR	-	-	-	-
R44140264[333]	1-1/16 "	R4133792	R 418162	R4166821	NR	-	-	-	-
R44140264[333]	1-1/16 "	R4133792	R 418162	R4166821	NR	-	-	-	-
-	7/8 "	R4133627	R4133628	R4166820	NR	-	-	-	-
-	3-3/32 "	R42R55119	R42R55118	R4066587	R4090018P	-	-	-	-
R44140267[79]	1 "	R4133004	R4133005	R4166822	NR	-	-	-	-

MAKE MODEL YEAR AXLE CODE AXLE WEIGHT	AXLE & BRK. TYPE	BRK. MFG.	BRAKE SIZE	FMSI	MERITOR DISC PAD OR BRAKE SHOE	MERITOR GUIDE PIN OR RETURN SPRING KIT	MERITOR CALIPER HWD. KIT OR RETURN SPRING KIT	MERITOR ADJUSTER KIT (LEFT WHEEL)	MERITOR ADJUSTER KIT (RIGHT WHEEL)
DODGE(Cont.)									
D200, D250, PD200, PD250, RD250 SERIES PICKUP-3/4 TON(Cont.)									
1974									
	Ra	BX	12 " x 2-1/2 "	2146AT - 357	R46357	R40H547	R40H4087	R40H2598	R40H2599
	Ra	BX	12 " x 3 "	2140AT - 358	R46358	R40H546	R40H7181	R40H2598	R40H2599
	Ra	BX	12 " x 3 "	2140AT - 358	R46358	R40H546	R40H7181	R40H2598	R40H2599
	Ra	BX	12.125 x 2 "	2075A - 33	N/A	R40H130	NR	NR	NR
1973									
	Fd	CH		7019 - D123	MD269	NR	R40H5516	NR	NR
	Ra	BX	12 " x 2-1/2 "	2146AT - 357	R46357	R40H547	R40H4087	R40H2598	R40H2599
	Ra	BX	12 " x 2-1/2 "	2146AT - 357	R46357	R40H547	R40H4087	R40H2598	R40H2599
	Ra	BX	12 " x 3 "	2140AT - 358	R46358	R40H547	R40H4087	R40H2598	R40H2599
	Ra	BX	12 " x 3 "	2140AT - 358	R46358	R40H547	R40H4087	R40H2598	R40H2599
	Ra	BX	12.125 x 2 "	2075A - 33	N/A	R40H130	NR	NR	NR
1972									
	Fa	BX	12 " x 2-1/2 "	2146AT - 357	R46357	R40H547	R40H4087	R40H2598	R40H2599
	Fa	BX	12 " x 3 "	2140AT - 358	R46358	R40H547	R40H4087	R40H2598	R40H2599
	Fa	BX	12.125 x 2 "	2075A - 33	N/A	R40H130	NR	NR	NR
	Fd	KH		781 - D39	NLA	NLA	R407991	NR	NR
	Ra	BX	12 " x 2-1/2 "	2146AT - 357	R46357	R40H547	R40H4087	R40H2598	R40H2599
	Ra	BX	12 " x 3 "	2140AT - 358	R46358	R40H547	R40H4087	R40H2598	R40H2599
D300, D350, PD300, PD350, D400, D450, PD400 PD450 SERIES PICKUP-1 TON									
1993									
	Ra	BX	12 " x 2-1/2 "	2146AT - 357	R46357	R40H547	R40H4087	R40H2598	R40H2599
	Ra	BX	11 " x 2-1/2 "	2025T - 446	R46446	R40H111	R40H7133	R40H2534	R40H2535
Diesel Engine	Fd	KH		7179 - D269	MD269	NR	R40H5516	NR	NR
Dual Rear Wheels	Ra	BX	12 " x 3 "	2140AT - 358	R46358	R40H547	R40H4087	R40H2598	R40H2599
Gasoline Engine	Fd	KH		7179 - D269	MD269	NR	R40H5516	NR	NR
5,500, 5,800 lb.	Ra	BX	12 " x 2-1/2 "	2146AT - 357	R46357	R40H547	R40H4087	R40H2598	R40H2599
6200 lb.	Ra	BX	12 " x 3 "	2140AT - 358	R46358	R40H547	R40H4087	R40H2598	R40H2599
1992									
	Ra	BX	12 " x 2-1/2 "	2146AT - 357	R46357	R40H547	R40H4087	R40H2598	R40H2599
Diesel Engine	Fd	KH		7179 - D269	MD269	NR	R40H5516	NR	NR
Dual Rear Wheels	Ra	BX	12 " x 3 "	2140AT - 358	R46358	R40H547	R40H4087	R40H2598	R40H2599
Gasoline Engine	Fd	KH		7179 - D269	MD269	NR	R40H5516	NR	NR
	Ra	BX	11 " x 2-1/2 "	2025T - 446	R46446	R40H111	R40H7133	R40H2534	R40H2535
5,500, 5,800 lb.	Ra	BX	12 " x 2-1/2 "	2146AT - 357	R46357	R40H547	R40H4087	R40H2598	R40H2599
6200 lb.	Ra	BX	12 " x 3 "	2140AT - 358	R46358	R40H547	R40H4087	R40H2598	R40H2599
1991									
	Fd	KH		7179 - D269	MD269	NR	R40H5516	NR	NR
	Ra	BX	12 " x 2-1/2 "	2146AT - 357	R46357	R40H547	R40H4087	R40H2598	R40H2599
Dual Rear Wheels	Ra	BX	12 " x 3 "	2140AT - 358	R46358	R40H547	R40H4087	R40H2598	R40H2599
Gasoline Engine	Fd	KH		7179 - D269	MD269	NR	R40H5516	NR	NR
	Ra	BX	11 " x 2-1/2 "	2025T - 446	R46446	R40H111	R40H7133	R40H2534	R40H2535
5,500, 5,800 lb.	Ra	BX	12 " x 2-1/2 "	2146AT - 357	R46357	R40H547	R40H4087	R40H2598	R40H2599
6200 lb.	Ra	BX	12 " x 3 "	2140AT - 358	R46358	R40H547	R40H4087	R40H2598	R40H2599
1990									
	Ra	BX	11 " x 2-1/2 "	2025T - 446	R46446	R40H111	R40H7133	R40H2534	R40H2535
	Ra	BX	12 " x 2-1/2 "	2146AT - 357	R46357	R40H547	R40H4087	R40H2598	R40H2599
	Ra	BX	12 " x 2-1/2 "	2146AT - 357	R46357	R40H547	R40H4087	R40H2598	R40H2599
	Ra	BX	12 " x 3 "	2140AT - 358	R46358	R40H547	R40H4087	R40H2598	R40H2599
Dual Rear Wheels	Fd	KH		7179 - D269	MD269	NR	R40H5516	NR	NR
Single Rear Wheels	Fd	KH		7179 - D269	MD269	NR	R40H5516	NR	NR
1989									
	Ra	BX	11 " x 2-1/2 "	2025T - 446	R46446	R40H111	R40H7133	R40H2534	R40H2535
	Ra	BX	12 " x 2-1/2 "	2146AT - 357	R46357	R40H547	R40H4087	R40H2598	R40H2599
	Ra	BX	12 " x 2-1/2 "	2146AT - 357	R46357	R40H547	R40H4087	R40H2598	R40H2599
	Ra	BX	12 " x 3 "	2140AT - 358	R46358	R40H547	R40H4087	R40H2598	R40H2599
Dual Rear Wheels	Fd	KH		7179 - D269	MD269	NR	R40H5516	NR	NR
Single Rear Wheels	Fd	KH		7179 - D269	MD269	NR	R40H5516	NR	NR
1988									
	Ra	BX	11 " x 2-1/2 "	2025T - 446	R46446	R40H111	R40H7133	R40H2534	R40H2535
	Ra	BX	12 " x 2-1/2 "	2146AT - 357	R46357	R40H547	R40H4087	R40H2598	R40H2599
	Ra	BX	12 " x 2-1/2 "	2146AT - 357	R46357	R40H547	R40H4087	R40H2598	R40H2599
	Ra	BX	12 " x 3 "	2140AT - 358	R46358	R40H547	R40H4087	R40H2598	R40H2599

45 - R44141382 is a hub & rotor, for rotor only use R44141193
83 - 5" Bolt Circle
333 - Except 9 1/4" Ring Gear
53 - Power Brakes
84 - 9 1/4" Ring Gear, Heavy Duty Axle
405 - Rotor Only
79 - Inboard Mounting
127 - Anchor

MERITOR DRUM OR ROTOR NO.	CALIPER OR CYLINDER BORE SIZE	MERITOR CALIPER OR WHEEL CYLINDER (LEFT)	MERITOR CALIPER OR WHEEL CYLINDER (RIGHT)	MERITOR CALIPER OR WHEEL CYLINDER REPAIR KIT	MERITOR CALIPER PISTON	MERITOR MASTER CYLINDER	MERITOR MASTER CYLINDER KIT	MERITOR BRAKE HOSE (LEFT)	MERITOR BRAKE HOSE (RIGHT)
									DODGE(Cont.)
					D200, D250, PD200, PD250, RD250 SERIES PICKUP-3/4 TON(Cont.)				
R44140267[79]	1 "	R4133005	R4133004	R4166822	NR	-	-	-	-
R44140264[333]	1 "	R4133004	R4133005	R4166822	NR	-	-	-	-
R44140264[333]	1-1/16 "	R4133792	R 418162	R4166821	NR	-	-	-	-
-	7/8 "	R4133627	R4133628	R4166820	NR	-	-	-	-
-	3-3/32 "	R42R55119	R42R55118	R4066587	R4090018P	-	-	-	-
R44140267[79]		-	-	-	NR	-	-	-	-
R44140267[79]	1 "	R4133005	R4133004	R4166822	NR	-	-	-	-
R44140264[333]	1-1/16 "	R4133792	R 418162	R4166821	NR	-	-	-	-
R44140264[333]	1-1/16 "	R4133792	R 418162	R4166821	NR	-	-	-	-
-	7/8 "	R4133627	R4133628	R4166820	NR	-	-	-	-
-		-	-	-	-	-	-	-	-
-		-	-	-	-	-	-	-	-
-	7/8 "	R4133627	R4133628	R4166820	NR	-	-	-	-
-		-	-	R4066851	R4090015S	-	-	-	-
R44140267[79]		-	-	-	NR	-	-	-	-
R44140264[333]		-	-	-	NR	-	-	-	-
					D300, D350, PD300, PD350, D400, D450, PD400 PD450 SERIES PICKUP-1 TON				
R44140547[84]	1 "	R4133005	R4133005	R4166822	NR	-	-	-	-
R441404090[83]	15/16 "	R4133597	R4133597	R4166852	NR	-	-	-	-
R44141663[405]	3-3/32 "	R42R55119	R42R55118	R4066587	R4090018P	R4111775[53]	R4122596	R4577169[127]	R4577169
R44140264[333]	1-1/8 "	R4133206	R4133207	R418187	NR	-	-	-	-
R44141382[45]	3-3/32 "	R42R55119	R42R55118	R4066587	R4090018P	R4111775[53]	R4122596	R4577169[127]	R4577169
R44140267[79]	7/8 "	R4133627	R4133628	R4166820	NR	-	-	-	-
R44140264[333]	1 "	R4133005	R4133005	R4166822	NR	-	-	-	-
R44140547[84]	1 "	R4133005	R4133005	R4166822	NR	-	-	-	-
R44141663[405]	3-3/32 "	R42R55119	R42R55118	R4066587	R4090018P	R4111775[53]	R4122596	R4577169[127]	R4577169
R44140264[333]	1-1/8 "	R4133206	R4133207	R418187	NR	-	-	-	-
R44141382[45]	3-3/32 "	R42R55119	R42R55118	R4066587	R4090018P	R4111775[53]	R4122596	R4577169[127]	R4577169
R441404090[83]	15/16 "	R4133597	R4133597	R4166852	NR	-	-	-	-
R44140267[79]	7/8 "	R4133627	R4133628	R4166820	NR	-	-	-	-
R44140264[333]	1 "	R4133005	R4133005	R4166822	NR	-	-	-	-
R44141663[405]	3-3/32 "	R42R55119	R42R55118	R4066587	R4090018P	R4111775[53]	R4122596	R4577169[127]	R4577169
R44140547[84]	1 "	R4133005	R4133005	R4166822	NR	-	-	-	-
R44140264[333]	1-1/8 "	R4133206	R4133207	R418187	NR	-	-	-	-
R44141382[45]	3-3/32 "	R42R55119	R42R55118	R4066587	R4090018P	R4111775[53]	R4122596	R4577169[127]	R4577169
R441404090[83]	15/16 "	R4133597	R4133597	R4166852	NR	-	-	-	-
R44140267[79]	7/8 "	R4133627	R4133628	R4166820	NR	-	-	-	-
R44140264[333]	1 "	R4133005	R4133005	R4166822	NR	-	-	-	-
R441404090[83]	15/16 "	R4133597	R4133597	R4166852	NR	-	-	-	-
R44140267[79]	7/8 "	R4133627	R4133628	R4166820	NR	-	-	-	-
R44140547[84]	1 "	R4133005	R4133005	R4166822	NR	-	-	-	-
R44140264[333]	1-1/8 "	R4133206	R4133207	R418187	NR	-	-	-	-
R44141663[405]	3-3/32 "	R42R55119	R42R55118	R4066587	R4090018P	R4111775[53]	R4122596	R4577169[127]	R4577169
R44141382[45]	3-3/32 "	R42R55119	R42R55118	R4066587	R4090018P	R4111775[53]	R4122596	R4577169[127]	R4577169
R441404090[83]	15/16 "	R4133597	R4133597	R4166852	NR	-	-	-	-
R44140547[84]	1 "	R4133005	R4133005	R4166822	NR	-	-	-	-
R44140267[79]	7/8 "	R4133627	R4133628	R4166820	NR	-	-	-	-
R44140264[333]	1-1/8 "	R4133206	R4133207	R418187	NR	-	-	-	-
R44141663[405]	3-3/32 "	R42R55119	R42R55118	R4066587	R4090018P	R4111775[53]	R4122596	R4577169[127]	R4577169
R44141382[45]	3-3/32 "	R42R55119	R42R55118	R4066587	R4090018P	R4111775[53]	R4122596	R4577169[127]	R4577169
R441404090[83]	15/16 "	R4133597	R4133597	R4166852	NR	-	-	-	-
R44140267[79]	7/8 "	R4133627	R4133628	R4166820	NR	-	-	-	-
R44140547[84]	1 "	R4133005	R4133005	R4166822	NR	-	-	-	-
R44140264[333]	1-1/8 "	R4133206	R4133207	R418187	NR	-	-	-	-

MAKE MODEL YEAR AXLE CODE AXLE WEIGHT	AXLE & BRK. TYPE	BRK. MFG.	BRAKE SIZE	FMSI	MERITOR DISC PAD OR BRAKE SHOE	MERITOR GUIDE PIN OR RETURN SPRING KIT	MERITOR CALIPER HWD. KIT OR RETURN SPRING KIT	MERITOR ADJUSTER KIT (LEFT WHEEL)	MERITOR ADJUSTER KIT (RIGHT WHEEL)
DODGE(Cont.)									
D300, D350, PD300, PD350, D400, D450, PD400 PD450 SERIES PICKUP-1 TON(Cont.)									
1988									
Single Rear Wheels									
Except 4500 lb.	Fd	KH		7179 - D269	MD269	NR	R40H5516	NR	NR
Dual Rear Wheels									
4,500 lb.	Fd	KH		7179 - D269	MD269	NR	R40H5516	NR	NR
1987									
	Ra	BX	12 " x 2-1/2 "	2146AT - 357	R46357	R40H547	R40H4087	R40H2598	R40H2599
	Ra	BX	12 " x 2-1/2 "	2146AT - 357	R46357	R40H547	R40H4087	R40H2598	R40H2599
	Ra	BX	12 " x 3 "	2140AT - 358	R46358	R40H547	R40H4087	R40H2598	R40H2599
	Ra	BX	12 " x 3 "	2140AT - 358	R46358	R40H547	R40H4087	R40H2598	R40H2599
	Ra	BX	12 " x 2-1/2 "	2146AT - 357	R46357	R40H547	R40H4087	R40H2598	R40H2599
Single Rear Wheels									
Except 4500 lb.	Fd	KH		7179 - D269	MD269	NR	R40H5516	NR	NR
	Fd	KH		7179 - D269	MD269	NR	R40H5516	NR	NR
Dual Rear Wheels									
4,500 lb.	Fd	KH		7179 - D269	MD269	NR	R40H5516	NR	NR
	Fd	KH		7179 - D269	MD269	NR	R40H5516	NR	NR
1986									
	Ra	BX	12 " x 2-1/2 "	2146AT - 357	R46357	R40H547	R40H4087	R40H2598	R40H2599
	Ra	BX	12 " x 2-1/2 "	2146AT - 357	R46357	R40H547	R40H4087	R40H2598	R40H2599
	Ra	BX	12 " x 3 "	2140AT - 358	R46358	R40H547	R40H4087	R40H2598	R40H2599
	Ra	BX	12 " x 3 "	2140AT - 358	R46358	R40H547	R40H4087	R40H2598	R40H2599
	Ra	BX	12 " x 2-1/2 "	2146AT - 357	R46357	R40H547	R40H4087	R40H2598	R40H2599
Single Rear Wheels									
Except 4500 lb.	Fd	KH		7179 - D269	MD269	NR	R40H5516	NR	NR
	Fd	KH		7179 - D269	MD269	NR	R40H5516	NR	NR
Dual Rear Wheels									
4,500 lb.	Fd	KH		7179 - D269	MD269	NR	R40H5516	NR	NR
	Fd	KH		7179 - D269	MD269	NR	R40H5516	NR	NR
1985									
	Ra	BX	12 " x 2-1/2 "	2146AT - 357	R46357	R40H547	R40H4087	R40H2598	R40H2599
	Ra	BX	12 " x 2-1/2 "	2146AT - 357	R46357	R40H547	R40H4087	R40H2598	R40H2599
	Ra	BX	12 " x 3 "	2140AT - 358	R46358	R40H547	R40H4087	R40H2598	R40H2599
	Ra	BX	12 " x 3 "	2140AT - 358	R46358	R40H547	R40H4087	R40H2598	R40H2599
Single Rear Wheels									
Except 4500 lb.	Fd	CH		7019 - D123	MD269	NR	R40H5516	NR	NR
	Fd	CH		7019 - D123	MD269	NR	R40H5516	NR	NR
Dual Rear Wheels									
4,500 lb.	Fd	CH		7019 - D123	MD269	NR	R40H5516	NR	NR
	Fd	CH		7019 - D123	MD269	NR	R40H5516	NR	NR
1984									
	Ra	BX	12 " x 2-1/2 "	2146AT - 357	R46357	R40H547	R40H4087	R40H2598	R40H2599
	Ra	BX	12 " x 2-1/2 "	2146AT - 357	R46357	R40H547	R40H4087	R40H2598	R40H2599
	Ra	BX	12 " x 3 "	2140AT - 358	R46358	R40H547	R40H4087	R40H2598	R40H2599
	Ra	BX	12 " x 3 "	2140AT - 358	R46358	R40H547	R40H4087	R40H2598	R40H2599
Single Rear Wheels									
Except 4500 lb.	Fd	CH		7019 - D123	MD269	NR	R40H5516	NR	NR
	Fd	CH		7019 - D123	MD269	NR	R40H5516	NR	NR
Dual Rear Wheels									
4,500 lb.	Fd	CH		7019 - D123	MD269	NR	R40H5516	NR	NR
	Fd	CH		7019 - D123	MD269	NR	R40H5516	NR	NR
1983									
	Ra	BX	12 " x 2-1/2 "	2146AT - 357	R46357	R40H547	R40H4087	R40H2598	R40H2599
	Ra	BX	12 " x 2-1/2 "	2146AT - 357	R46357	R40H547	R40H4087	R40H2598	R40H2599
	Ra	BX	12 " x 3 "	2140AT - 358	R46358	R40H547	R40H4087	R40H2598	R40H2599
	Ra	BX	12 " x 3 "	2140AT - 358	R46358	R40H547	R40H4087	R40H2598	R40H2599
Dual Rear Wheels	Fd	CH		7019 - D123	MD269	NR	R40H5516	NR	NR
Single Rear Wheels									
Except 4500 lb.	Fd	CH		7019 - D123	MD269	NR	R40H5516	NR	NR
1982									
	Ra	BX	12 " x 2-1/2 "	2146AT - 357	R46357	R40H547	R40H4087	R40H2598	R40H2599
	Ra	BX	12 " x 2-1/2 "	2146AT - 357	R46357	R40H547	R40H4087	R40H2598	R40H2599
	Ra	BX	12 " x 3 "	2140AT - 358	R46358	R40H547	R40H4087	R40H2598	R40H2599
	Ra	BX	12 " x 3 "	2140AT - 358	R46358	R40H547	R40H4087	R40H2598	R40H2599
Dual Rear Wheels	Fd	CH		7019 - D123	MD269	NR	R40H5516	NR	NR

45 - R44141382 is a hub & rotor, for rotor only use R44141193
79 - Inboard Mounting
127 - Anchor
52 - 18" Length
84 - 9 1/4" Ring Gear, Heavy Duty Axle
128 - Bracket
53 - Power Brakes
118 - Gasoline Engine, Power Brakes, Plastic Reservior
333 - Except 9 1/4" Ring Gear

MERITOR DRUM OR ROTOR NO.	CALIPER OR CYLINDER BORE SIZE	MERITOR CALIPER OR WHEEL CYLINDER (LEFT)	MERITOR CALIPER OR WHEEL CYLINDER (RIGHT)	MERITOR CALIPER OR WHEEL CYLINDER REPAIR KIT	MERITOR CALIPER PISTON	MERITOR MASTER CYLINDER	MERITOR MASTER CYLINDER KIT	MERITOR BRAKE HOSE (LEFT)	MERITOR BRAKE HOSE (RIGHT)
DODGE(Cont.)									
D300, D350, PD300, PD350, D400, D450, PD400 PD450 SERIES PICKUP-1 TON(Cont.)									
R44141382[45]	3-3/32 "	R42R55119	R42R55118	R4066587	R4090018P	R4111860[118]	R4122388	R4577169[127]	R4577169
R44141663[405]	3-3/32 "	R42R55119	R42R55118	R4066587	R4090018P	R4111775[53]	R4122596	R4577387[128]	R4577388
R44140547[84]	1 "	R4133005	R4133005	R4166822	NR	-	-	-	-
R44140547[84]	1-1/8 "	R4133206	R4133207	R418187	NR	-	-	-	-
R44140264[333]	1-1/16 "	R4133792	R 418162	R4166821	NR	-	-	-	-
R44140264[333]	1-1/8 "	R4133206	R4133207	R418187	NR	-	-	-	-
R44140547[84]	7/8 "	R4133627	R4133628	R4166820	NR	-	-	-	-
R44141382[45]	3-3/32 "	R42R55119	R42R55118	R4066587	R4090018P	R4111860[118]	R4122388	R4577169[127]	R4577169
R44141382[45]	3-3/32 "	R42R55119	R42R55118	R4066587	R4090018P	N/A[52]	R4122388	N/A	N/A
R44141089[405]	3-3/32 "	R42R55119	R42R55118	R4066587	R4090018P	N/A[52]	R4122388	N/A	N/A
R44141089[405]	3-3/32 "	R42R55119	R42R55118	R4066587	R4090018P	R4111775[53]	R4122596	R4577387[128]	R4577388
R44140547[84]	1-1/8 "	R4133206	R4133207	R418187	NR	-	-	-	-
R44140547[84]	1 "	R4133005	R4133005	R4166822	NR	-	-	-	-
R44140264[333]	1-1/8 "	R4133206	R4133207	R418187	NR	-	-	-	-
R44140264[333]	1-1/16 "	R4133792	R 418162	R4166821	NR	-	-	-	-
R44140547[84]	7/8 "	R4133627	R4133628	R4166820	NR	-	-	-	-
R44141382[45]	3-3/32 "	R42R55119	R42R55118	R4066587	R4090018P	R4111860[118]	R4122388	R4577169[127]	R4577169
R44141382[45]	3-3/32 "	R42R55119	R42R55118	R4066587	R4090018P	N/A[52]	R4122388	N/A	N/A
R44141089[405]	3-3/32 "	R42R55119	R42R55118	R4066587	R4090018P	N/A[52]	R4122388	N/A	N/A
R44141089[405]	3-3/32 "	R42R55119	R42R55118	R4066587	R4090018P	R4111775[53]	R4122596	R4577387[128]	R4577388
R44140267[79]	1 "	R4133005	R4133005	R4166822	NR	-	-	-	-
R44140267[79]	7/8 "	R4133627	R4133628	R4166820	NR	-	-	-	-
R44140264[333]	1-1/8 "	R4133206	R4133207	R418187	NR	-	-	-	-
R44140264[333]	1-1/16 "	R4133792	R 418162	R4166821	NR	-	-	-	-
R44141382[45]	3-3/32 "	R42R55119	R42R55118	R4066587	R4090018P	N/A[52]	R4122388	R4577169[127]	R4577169
R44141382[45]	3-3/32 "	R42R55119	R42R55118	R4066587	R4090018P	R4111860[118]	R4122388	R4577169[127]	R4577169
R44141089[405]	3-3/32 "	R42R55119	R42R55118	R4066587	R4090018P	R4111775[53]	R4122596	R4577169[127]	R4577169
R44141089[405]	3-3/32 "	R42R55119	R42R55118	R4066587	R4090018P	N/A[52]	R4122388	R4577169[127]	R4577169
R44140267[79]	7/8 "	R4133627	R4133628	R4166820	NR	-	-	-	-
R44140267[79]	1 "	R4133005	R4133005	R4166822	NR	-	-	-	-
R44140264[333]	1-1/16 "	R4133792	R 418162	R4166821	NR	-	-	-	-
R44140264[333]	1-1/8 "	R4133206	R4133207	R418187	NR	-	-	-	-
R44141382[45]	3-3/32 "	R42R55119	R42R55118	R4066587	R4090018P	N/A[52]	R4122388	R4577169[127]	R4577169
R44141382[45]	3-3/32 "	R42R55119	R42R55118	R4066587	R4090018P	R4111860[118]	R4122388	R4577169[127]	R4577169
R44141089[405]	3-3/32 "	R42R55119	R42R55118	R4066587	R4090018P	R4111775[53]	R4122596	R4577169[127]	R4577169
R44141089[405]	3-3/32 "	R42R55119	R42R55118	R4066587	R4090018P	N/A[52]	R4122388	R4577169[127]	R4577169
R44140267[79]	1 "	R4133005	R4133005	R4166822	NR	-	-	-	-
R44140267[79]	7/8 "	R4133627	R4133628	R4166820	NR	-	-	-	-
R44140264[333]	1-1/16 "	R4133792	R 418162	R4166821	NR	-	-	-	-
R44140264[333]	1-1/8 "	R4133206	R4133207	R418187	NR	-	-	-	-
R44141089[405]	3-3/32 "	R42R55119	R42R55118	R4066587	R4090018P	R4111860[118]	R4122388	R4577169[127]	R4577169
R44141382[45]	3-3/32 "	R42R55119	R42R55118	R4066587	R4090018P	R4111860[118]	R4122388	R4577316[128]	R4577317
R44140267[79]	1 "	R4133005	R4133005	R4166822	NR	-	-	-	-
R44140267[79]	7/8 "	R4133627	R4133628	R4166820	NR	-	-	-	-
R44140264[333]	1-1/8 "	R4133206	R4133207	R418187	NR	-	-	-	-
R44140264[333]	1-1/16 "	R4133792	R 418162	R4166821	NR	-	-	-	-
R44141089[405]	3-3/32 "	R42R55119	R42R55118	R4066587	R4090018P	R4111860[118]	R4122388	R4577169[127]	R4577169

405 - Rotor Only

MAKE MODEL YEAR AXLE CODE AXLE WEIGHT	AXLE & BRK. TYPE	BRK. MFG.	BRAKE SIZE	FMSI	MERITOR DISC PAD OR BRAKE SHOE	MERITOR GUIDE PIN OR RETURN SPRING KIT	MERITOR CALIPER HWD. KIT OR RETURN SPRING KIT	MERITOR ADJUSTER KIT (LEFT WHEEL)	MERITOR ADJUSTER KIT (RIGHT WHEEL)
DODGE(Cont.)									
D300, D350, PD300, PD350, D400, D450, PD400 PD450 SERIES PICKUP-1 TON(Cont.)									
1982									
Single Rear Wheels									
Except 4500 lb.	Fd	CH		7019 - D123	MD269	NR	R40H5516	NR	NR
1981									
	Ra	BX	12 " x 2-1/2 "	2146AT - 357	R46357	R40H547	R40H4087	R40H2598	R40H2599
	Ra	BX	12 " x 2-1/2 "	2146AT - 357	R46357	R40H547	R40H4087	R40H2598	R40H2599
	Ra	BX	12 " x 3 "	2140AT - 358	R46358	R40H547	R40H4087	R40H2598	R40H2599
	Ra	BX	12 " x 3 "	2140AT - 358	R46358	R40H547	R40H4087	R40H2598	R40H2599
Dual Rear Wheels	Fd	CH		7019 - D123	MD269	NR	R40H5516	NR	NR
Single Rear Wheels									
Except 4500 lb.	Fd	CH		7019 - D123	MD269	NR	R40H5516	NR	NR
1980									
	Ra	BX	12 " x 3 "	2140AT - 358	R46358	R40H547	R40H4087	R40H2598	R40H2599
Single Rear Wheels	Fd	CH		7019 - D123	MD269	NR	R40H5516	NR	NR
	Fd	CH		7019 - D123	MD269	NR	R40H5516	NR	NR
1979									
	Ra	BX	12 " x 3 "	2140AT - 358	R46358	R40H547	R40H4087	R40H2598	R40H2599
Single Rear Wheels	Fd	CH		7019 - D123	MD269	NR	R40H5516	NR	NR
	Fd	CH		7019 - D123	MD269	NR	R40H5516	NR	NR
1978									
	Ra	BX	12 " x 3 "	2140AT - 358	R46358	R40H547	R40H4087	R40H2598	R40H2599
Single Rear Wheels	Fd	CH		7019 - D123	MD269	NR	R40H5516	NR	NR
	Fd	CH		7019 - D123	MD269	NR	R40H5516	NR	NR
1977									
	Ra	BX	12 " x 3 "	2140AT - 358	R46358	R40H547	R40H4087	R40H2598	R40H2599
Dual Rear Wheels	Fd	CH		7019 - D123	MD269	NR	R40H5516	NR	NR
	Fd	CH		7019 - D123	MD269	NR	R40H5516	NR	NR
1976									
	Ra	BX	12 " x 3 "	2140AT - 358	R46358	R40H547	R40H4087	R40H2598	R40H2599
Dual Rear Wheels	Fd	CH		7019 - D123	MD269	NR	R40H5516	NR	NR
	Fd	CH		7019 - D123	MD269	NR	R40H5516	NR	NR
1975									
	Ra	BX	12 " x 3 "	2140AT - 358	R46358	R40H547	R40H4087	R40H2598	R40H2599
Dual Rear Wheels	Fd	CH		7019 - D123	MD269	NR	R40H5516	NR	NR
	Fd	CH		7019 - D123	MD269	NR	R40H5516	NR	NR
1974									
	Ra	BX	12 " x 3 "	2140AT - 358	R46358	R40H546	R40H4087	R40H2598	R40H2599
Dual Rear Wheels	Fd	CH		7019 - D123	MD269	NR	R40H5516	NR	NR
	Fd	CH		7019 - D123	MD269	NR	R40H5516	NR	NR
1973									
	Ra	BX	12 " x 3 "	2140AT - 358	R46358	R40H547	R40H4087	R40H2598	R40H2599
Dual Rear Wheels	Fd	CH		7019 - D123	MD269	NR	R40H5516	NR	NR
	Fd	CH		7019 - D123	MD269	NR	R40H5516	NR	NR
1972									
	Fd	KH		781 - D39	NLA	NLA	R407991	NR	NR
	Ra	BX	12 " x 3 "	2140AT - 358	R46358	R40H547	R40H4087	R40H2598	R40H2599
P200 SERIES PARCEL DELIVERY-3/4 TON									
1974									
	Fa	BX	12.125 x 2 "	2075A - 33	N/A	R40H130	-	NR	NR
	Ra	BX	12 " x 3 "	2140AT - 358	R46358	R40H546	R40H4087	R40H2598	R40H2599
	Ra	BX	12 " x 2-1/2 "	2146AT - 357	R46357	R40H547	R40H4087	R40H2598	R40H2599
	Ra	BX	12 " x 2-1/2 "	2146AT - 357	R46357	R40H547	R40H4087	R40H2598	R40H2599
1973									
	Fa	BX	12.125 x 2 "	2075A - 33	N/A	R40H130	-	NR	NR
	Ra	BX	12 " x 3 "	2140AT - 358	R46358	R40H547	R40H4087	R40H2598	R40H2599
	Ra	BX	12 " x 2-1/2 "	2146AT - 357	R46357	R40H547	R40H4087	R40H2598	R40H2599
	Ra	BX	12 " x 2-1/2 "	2146AT - 357	R46357	R40H547	R40H4087	R40H2598	R40H2599
1972									
	Fa	BX	12.125 x 2 "	2075A - 33	N/A	R40H130	-	NR	NR
	Ra	BX	12 " x 3 "	2140AT - 358	R46358	R40H547	R40H4087	R40H2598	R40H2599
	Ra	BX	12 " x 2-1/2 "	2146AT - 357	R46357	R40H547	R40H4087	R40H2598	R40H2599
	Ra	BX	12 " x 2-1/2 "	2146AT - 357	R46357	R40H547	R40H4087	R40H2598	R40H2599

45 - R44141382 is a hub & rotor, for rotor only use R44141193
110 - Diesel Engine, Power Brakes
128 - Bracket
79 - Inboard Mounting
118 - Gasoline Engine, Power Brakes, Plastic Reservior
333 - Except 9 1/4" Ring Gear
89 - Rotor Only with 1/2" Studs
127 - Anchor
405 - Rotor Only

MERITOR DRUM OR ROTOR NO.	CALIPER OR CYLINDER BORE SIZE	MERITOR CALIPER OR WHEEL CYLINDER (LEFT)	MERITOR CALIPER OR WHEEL CYLINDER (RIGHT)	MERITOR CALIPER OR WHEEL CYLINDER REPAIR KIT	MERITOR CALIPER PISTON	MERITOR MASTER CYLINDER	MERITOR MASTER CYLINDER KIT	MERITOR BRAKE HOSE (LEFT)	MERITOR BRAKE HOSE (RIGHT)
									DODGE(Cont.)
D300, D350, PD300, PD350, D400, D450, PD400 PD450 SERIES PICKUP-1 TON(Cont.)									
R44141382[45]	3-3/32 "	R42R55119	R42R55118	R4066587	R4090018P	R4111860[118]	R4122388	R4577316[128]	R4577317
R44140267[79]	1 "	R4133005	R4133005	R4166822	NR	-	-	-	-
R44140267[79]	7/8 "	R4133627	R4133628	R4166820	NR	-	-	-	-
R44140264[333]	1-1/8 "	R4133206	R4133207	R418187	NR	-	-	-	-
R44140264[333]	1-1/16 "	R4133792	R 418162	R4166821	NR	-	-	-	-
R44141089[405]	3-3/32 "	R42R55119	R42R55118	R4066587	R4090018P	N/A[110]	R4122489	R4577169[127]	R4577169
R44141382[45]	3-3/32 "	R42R55119	R42R55118	R4066587	R4090018P	R4111860[118]	R4122388	R4577173	R4577172
R44140264[333]	1 "	R4133004	R4133004	R4166822	NR	-	-	-	-
R44141193[89]	3-3/32 "	R42R55119	R42R55118	R4066587	R4090018P	N/A[110]	R4122489	R4577169[127]	R4577169
R44141193[89]	3-3/32 "	R42R55119	R42R55118	R4066587	R4090018P	R4111860[118]	R4122388	R4577173	R4577172
R44140264[333]	1 "	R4133004	R4133004	R4166822	NR	-	-	-	-
R44141193[89]	3-3/32 "	R42R55119	R42R55118	R4066587	R4090018P	N/A[110]	R4122489	R4577169[127]	R4577169
R44141193[89]	3-3/32 "	R42R55119	R42R55118	R4066587	R4090018P	R4111860[118]	R4122388	R4577173	R4577172
R44140264[333]	1 "	R4133004	R4133004	R4166822	NR	-	-	-	-
R44141193[89]	3-3/32 "	R42R55119	R42R55118	R4066587	R4090018P	N/A[110]	R4122489	R4577169[127]	R4577169
R44141193[89]	3-3/32 "	R42R55119	R42R55118	R4066587	R4090018P	N/A[110]	R4122489	R4577169[127]	R4577169
R44140264[333]	1 "	R4133004	R4133005	R4166822	NR	-	-	-	-
R44141089[405]	3-3/32 "	R42R55119	R42R55118	R4066587	R4090018P	-	-	-	-
R44141089[405]	3-3/32 "	R42R55119	R42R55118	R4066587	R4090018P	-	-	-	-
R44140264[333]	1 "	R4133004	R4133005	R4166822	NR	-	-	-	-
R44141089[405]	3-3/32 "	R42R55119	R42R55118	R4066587	R4090018P	-	-	-	-
R44141089[405]	3-3/32 "	R42R55119	R42R55118	R4066587	R4090018P	-	-	-	-
R44140264[333]	1 "	R4133004	R4133005	R4166822	NR	-	-	-	-
R44141089[405]	3-3/32 "	R42R55119	R42R55118	R4066587	R4090018P	-	-	-	-
R44141089[405]	3-3/32 "	R42R55119	R42R55118	R4066587	R4090018P	-	-	-	-
R44140264[333]	1 "	R4133004	R4133005	R4166822	NR	-	-	-	-
R44141089[405]	3-3/32 "	R42R55119	R42R55118	R4066587	R4090018P	-	-	-	-
R44141089[405]	3-3/32 "	R42R55119	R42R55118	R4066587	R4090018P	-	-	-	-
R44140264[333]	1 "	R4133004	R4133005	R4166822	NR	-	-	-	-
R44141089[405]	3-3/32 "	R42R55119	R42R55118	R4066587	R4090018P	-	-	-	-
R44141089[405]	3-3/32 "	R42R55119	R42R55118	R4066587	R4090018P	-	-	-	-
-		-	-	R4066851	R4090015S	-	-	-	-
R44140264[333]	1 "	R4133004	R4133005	R4166822	NR	-	-	-	-
									P200 SERIES PARCEL DELIVERY-3/4 TON
-	1-1/8 "	R4133206	R4133207	R418187	NR	-	-	-	-
R44140264[333]	1 "	R4133004	R4133005	R4166822	NR	-	-	-	-
R44140267[79]	7/8 "	R4133627	R4133628	R4166820	NR	-	-	-	-
R44140267[79]	1 "	R4133004	R4133005	R4166822	NR	-	-	-	-
-	1-1/8 "	R4133206	R4133207	R418187	NR	-	-	-	-
R44140264[333]	1 "	R4133004	R4133005	R4166822	NR	-	-	-	-
R44140267[79]	1 "	R4133004	R4133005	R4166822	NR	-	-	-	-
R44140267[79]	7/8 "	R4133627	R4133628	R4166820	NR	-	-	-	-
-	1-1/8 "	R4133206	R4133207	R418187	NR	-	-	-	-
R44140264[333]	1 "	R4133004	R4133005	R4166822	NR	-	-	-	-
R44140267[79]	7/8 "	R4133627	R4133628	R4166820	NR	-	-	-	-
R44140267[79]	1 "	R4133004	R4133005	R4166822	NR	-	-	-	-

MAKE MODEL YEAR AXLE CODE AXLE WEIGHT	AXLE & BRK. TYPE	BRK. MFG.	BRAKE SIZE	FMSI	MERITOR DISC PAD OR BRAKE SHOE	MERITOR GUIDE PIN OR RETURN SPRING KIT	MERITOR CALIPER HWD. KIT OR RETURN SPRING KIT	MERITOR ADJUSTER KIT (LEFT WHEEL)	MERITOR ADJUSTER KIT (RIGHT WHEEL)
DODGE(Cont.)									
P300 SERIES PARCEL DELIVERY-1 TON									
1978	Fa	BX	12 " x 3 "	2140AT - 358	R46358	R40H547	R40H4087	R40H2598	R40H2599
	Ra	BX	12 " x 3 "	2140AT - 358	R46358	R40H547	R40H4087	R40H2598	R40H2599
1977	Fa	BX	12 " x 3 "	2140AT - 358	R46358	R40H547	R40H4087	R40H2598	R40H2599
	Ra	BX	12 " x 3 "	2140AT - 358	R46358	R40H547	R40H4087	R40H2598	R40H2599
1976	Fa	BX	12 " x 3 "	2140AT - 358	R46358	R40H547	R40H4087	R40H2598	R40H2599
	Ra	BX	12 " x 3 "	2140AT - 358	R46358	R40H547	R40H4087	R40H2598	R40H2599
1975	Fa	BX	12 " x 3 "	2140AT - 358	R46358	R40H547	R40H4087	R40H2598	R40H2599
	Ra	BX	12 " x 3 "	2140AT - 358	R46358	R40H547	R40H4087	R40H2598	R40H2599
1974	Fa	BX	12 " x 3 "	2140AT - 358	R46358	R40H546	R40H7181	R40H2598	R40H2599
	Ra	BX	12 " x 3 "	2140AT - 358	R46358	R40H546	R40H7181	R40H2598	R40H2599
1973	Fa	BX	12 " x 3 "	2140AT - 358	R46358	R40H547	R40H4087	R40H2598	R40H2599
	Ra	BX	12 " x 3 "	2140AT - 358	R46358	R40H547	R40H4087	R40H2598	R40H2599
1972	Fa	BX	12 " x 3 "	2140AT - 358	R46358	R40H547	R40H4087	R40H2598	R40H2599
	Ra	BX	12 " x 3 "	2140AT - 358	R46358	R40H547	R40H4087	R40H2598	R40H2599
R300, M300 MOTOR HOME									
1980	Fd				N/A	N/A	N/A	NR	NR
	Ra	BX	12 " x 3 "	2140AT - 358	R46358	R40H547	R40H4087	R40H2598	R40H2599
1977	Fa	BX	12 " x 3 "	2140AT - 358	R46358	R40H547	R40H4087	R40H2598	R40H2599
	Fd	CH		7019 - D123	MD269	NR	R40H5516	NR	NR
	Ra	BX	12 " x 3 "	2140AT - 358	R46358	R40H547	R40H4087	R40H2598	R40H2599
1976	Fa	BX	12 " x 3 "	2140AT - 358	R46358	R40H547	R40H4087	R40H2598	R40H2599
	Fd	CH		7019 - D123	MD269	NR	R40H5516	NR	NR
	Ra	BX	12 " x 3 "	2140AT - 358	R46358	R40H547	R40H4087	R40H2598	R40H2599
1975	Fa	BX	12 " x 3 "	2140AT - 358	R46358	R40H547	R40H4087	R40H2598	R40H2599
	Fd	CH		7019 - D123	MD269	NR	R40H5516	NR	NR
	Ra	BX	12 " x 3 "	2140AT - 358	R46358	R40H547	R40H4087	R40H2598	R40H2599
1974	Fa	BX	12 " x 3 "	2140AT - 358	R46358	R40H546	R40H7181	R40H2598	R40H2599
	Fd	CH		7019 - D123	MD269	NR	R40H5516	NR	NR
	Ra	BX	12 " x 3 "	2140AT - 358	R46358	R40H546	R40H7181	R40H2598	R40H2599
1973	Fd	CH		7019 - D123	MD269	NR	R40H5516	NR	NR
	Ra	BX	12 " x 3 "	2140AT - 358	R46358	R40H547	R40H4087	R40H2598	R40H2599
1972	Fd	CH		7019 - D123	MD269	NR	R40H5516	NR	NR
	Ra	BX	12 " x 3 "	2140AT - 358	R46358	R40H547	R40H4087	R40H2598	R40H2599
R400, M400 MOTOR HOME									
1980	Fd				N/A	N/A	N/A	NR	NR
1979	Fd				N/A	N/A	N/A	NR	NR
1978	Fd				N/A	N/A	N/A	NR	NR
1977	Fd				N/A	N/A	NLA	NR	NR
1976	Fd				N/A	N/A	NLA	NR	NR
1975	Fd				N/A	N/A	NLA	NR	NR
1974	Fd				N/A	N/A	NLA	NR	NR

53 - Power Brakes
405 - Rotor Only

119 - Power Brakes, School Bus

333 - Except 9 1/4" Ring Gear

MERITOR DRUM OR ROTOR NO.	CALIPER OR CYLINDER BORE SIZE	MERITOR CALIPER OR WHEEL CYLINDER (LEFT)	MERITOR CALIPER OR WHEEL CYLINDER (RIGHT)	MERITOR CALIPER OR WHEEL CYLINDER REPAIR KIT	MERITOR CALIPER PISTON	MERITOR MASTER CYLINDER	MERITOR MASTER CYLINDER KIT	MERITOR BRAKE HOSE (LEFT)	MERITOR BRAKE HOSE (RIGHT)
									DODGE(Cont.)
									P300 SERIES PARCEL DELIVERY-1 TON
N/A	1-1/8 "	R4133206	R4133207	R418187	NR	-	-	-	-
R44140264[333]	1-1/16 "	R4133791	R 418145	R4166821	NR	-	-	-	-
-	1-1/8 "	R4133206	R4133207	R418187	NR	-	-	-	-
R44140264[333]	1-1/16 "	R4133791	R 418145	R4166821	NR	-	-	-	-
-	1-1/8 "	R4133206	R4133207	R418187	NR	-	-	-	-
R44140264[333]	1-1/16 "	R4133791	R 418145	R4166821	NR	-	-	-	-
-	1-1/8 "	R4133206	R4133207	R418187	NR	-	-	-	-
R44140264[333]	1-1/16 "	R4133791	R 418145	R4166821	NR	-	-	-	-
R44140264[333]	1-1/8 "	R4133206	R4133207	R418187	NR	-	-	-	-
R44140264[333]	1-1/16 "	R4133791	R 418145	R4166821	NR	-	-	-	-
-	1-1/8 "	R4133206	R4133207	R418187	NR	-	-	-	-
R44140264[333]	1-1/16 "	R4133791	R 418145	R4166821	NR	-	-	-	-
-	1-1/8 "	R4133206	R4133207	R418187	NR	-	-	-	-
R44140264[333]	1-1/16 "	R4133791	R 418145	R4166821	NR	-	-	-	-
									R300, M300 MOTOR HOME
N/A		R42R55455	R42R55454	N/A	N/A[405]	-	-	-	-
R44140264[333]	1 "	R4133005	R4133005	R4166822	NR	-	-	-	-
R44140264[333]	1-1/16 "	R4133791	R 418145	R4166821	NR	-	-	-	-
R44141089[405]	3-3/32 "	R42R55119	R42R55118	R4066587	R4090018P	-	-	-	-
R44140264[333]	1 "	R4133005	R4133004	R4166822	NR	-	-	-	-
R44140264[333]	1-1/16 "	R4133791	R 418145	R4166821	NR	-	-	-	-
R44141089[405]	3-3/32 "	R42R55119	R42R55118	R4066587	R4090018P	-	-	-	-
R44140264[333]	1 "	R4133005	R4133004	R4166822	NR	-	-	-	-
R44140264[333]	1-1/16 "	R4133791	R 418145	R4166821	NR	-	-	-	-
R44141089[405]	3-3/32 "	R42R55119	R42R55118	R4066587	R4090018P	-	-	-	-
R44140264[333]	1 "	R4133005	R4133004	R4166822	NR	-	-	-	-
R44140264[333]	1-1/16 "	R4133791	R 418145	R4166821	NR	-	-	-	-
R44141089[405]	3-3/32 "	R42R55119	R42R55118	R4066587	R4090018P	-	-	-	-
R44140264[333]	1 "	R4133004	R4133005	R4166822	NR	-	-	-	-
R44141089[405]	3-3/32 "	R42R55119	R42R55118	R4066587	R4090018P	-	-	-	-
R44140264[333]	1 "	R4133005	R4133004	R4166822	NR	-	-	-	-
R44141089[405]	3-3/32 "	R42R55119	R42R55118	R4066587	R4090018P	-	-	-	-
R44140264[333]	1 "	R4133005	R4133004	R4166822	NR	-	-	-	-
									R400, M400 MOTOR HOME
N/A		R42R55455	R42R55454	N/A	N/A[405]	R4111583[119]	R4122598	N/A	N/A
N/A		R42R55455	R42R55454	N/A	N/A[405]	R4111583[119]	R4122598	-	-
N/A		R42R55455	R42R55454	N/A	N/A[405]	R4111583[119]	R4122598	-	-
-		R42R55455	R42R55454	N/A	N/A[405]	R4111583[53]	R4122598	-	-
-		R42R55455	R42R55454	N/A	N/A[405]	R4111583[53]	R4122598	-	-
-		R42R55455	R42R55454	N/A	N/A[405]	-	-	N/A	N/A
-		R42R55455	R42R55454	N/A	N/A[405]	-	-	N/A	N/A

MAKE MODEL YEAR AXLE CODE AXLE WEIGHT	AXLE & BRK. TYPE	BRK. MFG.	BRAKE SIZE	FMSI	MERITOR DISC PAD OR BRAKE SHOE	MERITOR GUIDE PIN OR RETURN SPRING KIT	MERITOR CALIPER HWD. KIT OR RETURN SPRING KIT	MERITOR ADJUSTER KIT (LEFT WHEEL)	MERITOR ADJUSTER KIT (RIGHT WHEEL)
DODGE(Cont.)									
R400, M400 MOTOR HOME(Cont.)									
1973	Fd				N/A	N/A	NLA	NR	NR
RAM 2500 3/4 TON PICKUP									
2005									
4x2	Fd	TRW		7864 - D965	MD965	R40H5735	R4011133	NR	NR
	Rd	TRW		7576 - D702	MVD702	-	-	NR	NR
4x4	Fd	TRW		7864 - D965	MD965	R40H5735	R4011133	NR	NR
	Rd	TRW		7576 - D702	MVD702	-	-	NR	NR
2004									
4x2	Fd	TRW		7864 - D965	MD965	R40H5735	R4011133	NR	NR
	Rd	TRW		7576 - D702	MVD702	-	-	NR	NR
4x4	Fd	TRW		7864 - D965	MD965	R40H5735	R4011133	NR	NR
	Rd	TRW		7576 - D702	MVD702	-	-	NR	NR
2003									
4x2	Rd	TRW		7576 - D702	MVD702	-	-	NR	NR
4x4	Fd	TRW		7864 - D965	MD965	R40H5735	R4011133	NR	NR
	Rd	TRW		7576 - D702	MVD702	-	-	NR	NR
2002									
4x2	Fd	TRW		7694 - D821	MD821	R40H5735	R40H5975	NR	NR
	Rd	TRW		7576 - D702	MVD702	R40H15068	R40H5974	NR	NR
4x4	Fd	TRW		7694 - D821	MD821	R40H5735	R40H5975	NR	NR
	Rd	TRW		7576 - D702	MVD702	R40H15068	R40H5974	NR	NR
2001									
4x2	Fd	TRW		7694 - D821	MD821	R40H5735	R40H5975	NR	NR
	Fd	TRW		7694 - D821	MD821	R40H5735	R40H5975	NR	NR
	Ra		12.125 x 3-1/2 "	2171T - 583	R468140	R40H7299	N/A	R40H2598	R40H2599
	Rd	TRW		7576 - D702	MVD702	R40H15068	R40H5974	NR	NR
	Rd	TRW		7576 - D702	MVD702	R40H15068	R40H5974	NR	NR
4x4	Fd	TRW		7694 - D821	MD821	R40H5735	R40H5975	NR	NR
	Fd	TRW		7694 - D821	MD821	R40H5735	R40H5975	NR	NR
	Ra		12.125 x 3-1/2 "	2171T - 583	R468140	R40H7299	N/A	R40H2598	R40H2599
	Rd	TRW		7576 - D702	MVD702	R40H15068	R40H5974	NR	NR
	Rd	TRW		7576 - D702	MVD702	R40H15068	R40H5974	NR	NR
2000									
4x2	Fd	TRW		7694 - D821	MD821	R40H5735	R40H5975	NR	NR
	Fd	TRW		7694 - D821	MD821	R40H5735	R40H5975	NR	NR
	Ra		12.125 x 3-1/2 "	2171T - 583	R468140	R40H7299	N/A	R40H2598	R40H2599
4x4	Fd	TRW		7694 - D821	MD821	R40H5735	R40H5975	NR	NR
	Fd	TRW		7694 - D821	MD821	R40H5735	R40H5975	NR	NR
	Ra		12.125 x 3-1/2 "	2171T - 583	R468140	R40H7299	N/A	R40H2598	R40H2599
1999									
4x2	Fd	GM		7260 - D370	MD370	R40H5083	R40H5707	NR	NR
	Fd	GM		7260 - D370	MD370	R40H5083	R40H5707	NR	NR
	Ra	GM	13 " x 2-1/2 "	2042AT - 451	R46451	R40H378	R40H7055	R40H2588	R40H2589
4x4	Fd	GM		7260 - D370	MD370	R40H5083	R40H5707	NR	NR
	Fd	GM		7260 - D370	MD370	R40H5083	R40H5707	NR	NR
	Ra	GM	13 " x 2-1/2 "	2042AT - 451	R46451	R40H378	R40H7055	R40H2588	R40H2589
	Ra	GM	13 " x 2-1/2 "	2042AT - 451	R46451	R40H378	R40H7055	R40H2588	R40H2589
4x4									
4,850 lb.	Fd	GM		7339 - D459	MD459	R40H5083	R40H5788	NR	NR
	Fd	GM		7339 - D459	MD459	R40H5083	R40H5788	NR	NR
1998									
4x2	Fd	GM		7260 - D370	MD370	R40H5083	R40H5707	NR	NR
	Fd	GM		7260 - D370	MD370	R40H5083	R40H5707	NR	NR
	Ra	GM	13 " x 2-1/2 "	2042AT - 451	R46451	R40H378	R40H7055	R40H2588	R40H2589
4x4	Ra	GM	13 " x 2-1/2 "	2042AT - 451	R46451	R40H378	R40H7055	R40H2588	R40H2589
4x4									
3,500 lb.	Fd	GM		7260 - D370	MD370	R40H5083	R40H5707	NR	NR

85 - 4 Wheel Antilock Brakes
153 - 4x2, With 4 Wheel Antilock Brakes
381 - Rotor and Hub One Piece Assembly W/O ABS Ring
97 - Rear Wheel Antilock Brakes
154 - 4x2, With Rear Wheel Antilock Brakes
405 - Rotor Only
145 - Rear Wheel Antilock Brakes, without Bracket on Threaded End
363 - Piston includes Boots and Seals

MERITOR DRUM OR ROTOR NO.	CALIPER OR CYLINDER BORE SIZE	MERITOR CALIPER OR WHEEL CYLINDER (LEFT)	MERITOR CALIPER OR WHEEL CYLINDER (RIGHT)	MERITOR CALIPER OR WHEEL CYLINDER REPAIR KIT	MERITOR CALIPER PISTON	MERITOR MASTER CYLINDER	MERITOR MASTER CYLINDER KIT	MERITOR BRAKE HOSE (LEFT)	MERITOR BRAKE HOSE (RIGHT)
									DODGE(Cont.)
									R400, M400 MOTOR HOME(Cont.)
-		R42R55455	R42R55454	N/A	N/A[405]	-	-	-	-
									RAM 2500 3/4 TON PICKUP
R44145456	56mm	R421005093269AA	R421005093266AA	R4012094	R4012093[363]	N/A	-	N/A	N/A
R44145452	45mm	R4212491	R4212490	-	-	-	-	R4578934	R4578934
R44145456	56mm	R421005093269AA	R421005093266AA	R4012094	R4012093[363]	N/A	-	N/A	N/A
R44145452	45mm	R4212491	R4212490	-	-	-	-	R4578934	R4578934
R44145456	56mm	R421005093269AA	R421005093266AA	R4012094	R4012093[363]	N/A	-	N/A	N/A
R44145452	45mm	R4212491	R4212490	-	-	-	-	R4578934	R4578934
R44145456	56mm	R421005093269AA	R421005093266AA	R4012094	R4012093[363]	N/A	-	N/A	N/A
R44145452	45mm	R4212491	R4212490	-	-	-	-	R4578934	R4578934
R44145452	45mm	R4212491	R4212490	-	-	-	-	R4578934	R4578934
R44145456	56mm	R421005093269AA	R421005093266AA	R4012094	R4012093[363]	N/A	-	N/A	N/A
R44145452	45mm	R4212491	R4212490	-	-	-	-	R4578934	R4578934
R44145283	56mm	R4255890	R4255889	R4012094	R4012093[363]	-	N/A	R4578899[154]	R4578898
R44145357	45mm	R4255967	R4255972	R4012238	R4012237[363]	-	-	R4578885	R4578885
R44145283	56mm	R4255890	R4255889	R4012094	R4012093[363]	-	N/A	R4512411[154]	R4512412
R44145357	45mm	R4255967	R4255972	R4012238	R4012237[363]	-	-	R4578885	R4578885
R44145283	56mm	R4255890	R4255889	R4012094	R4012093[363]	R4113442	N/A	R4512407[153]	R4512408
R44145283	56mm	R4255890	R4255889	R4012094	R4012093[363]	R4113442	N/A	R4578899[154]	R4578898
R44140722	1 "	R4133004	R4133005	R4166822	NR	-	-	R4578885	R4578885
R44145357	51mm	R4255973	R4255972	R4012234	R4012233[363]	-	-	R4578885	R4578885
R44145357	45mm	R4255967	R4255972	R4012238	R4012237[363]	-	-	R4578885	R4578885
R44145283	56mm	R4255890	R4255889	R4012094	R4012093[363]	R4113442	N/A	R4512411[154]	R4512412
R44145283	56mm	R4255890	R4255889	R4012094	R4012093[363]	R4113442	N/A	R4512409[153]	R4512410
R44140722	1 "	R4133004	R4133005	R4166822	NR	-	-	R4578885	R4578885
R44145357	51mm	R4255973	R4255972	R4012234	R4012233[363]	-	-	R4578885	R4578885
R44145357	45mm	R4255967	R4255972	R4012238	R4012237[363]	-	-	R4578885	R4578885
R44145283	56mm	R4255890	R4255889	R4012094	R4012093[363]	R4113442	N/A	R4512407[153]	R4512408
R44145283	56mm	R4255890	R4255889	R4012094	R4012093[363]	R4113442	N/A	R4578899[154]	R4578898
R44140722	1 "	R4133004	R4133005	R4166822	NR	-	-	R4578885	R4578885
R44145283	56mm	R4255890	R4255889	R4012094	R4012093[363]	R4113442	N/A	R4512409[153]	R4512410
R44145283	56mm	R4255890	R4255889	R4012094	R4012093[363]	R4113442	N/A	R4512411[154]	R4512412
R44140722	1 "	R4133004	R4133005	R4166822	NR	-	-	R4578885	R4578885
R44141923[381]	3-5/32 "	R42R55497	R42R55496	R4066330	R4090101S	R4113442	N/A	R4578145[85]	R4578135
R44141923[381]	3-5/32 "	R42R55497	R42R55496	R4066330	R4090101S	R4113442	N/A	R4577841[145]	R4578129
R44140658	15/16	R4134102	R4134102	R4166852	NR	-	-	R4578085	R4578085
R44141477[405]	3-5/32 "	R42R55497	R42R55496	R4066330	R4090101S	R4113442	N/A	R4578145[85]	R4578410
R44141477[405]	3-5/32 "	R42R55497	R42R55496	R4066330	R4090101S	R4113442	N/A	R4578386[97]	R4578129
R44140658	1-1/16 "	R4133709	R4133709	R4166872	NR	-	-	R4578897	R4578897
R44140658	15/16	R4134102	R4134102	R4166852	NR	-	-	R4578085	R4578085
R44141770[405]	3-25/64 "	R42R55687	R42R55688	R4066211	R4090188S	R4113442	N/A	R4578145[85]	R4578410
R44141770[405]	3-25/64 "	R42R55687	R42R55688	R4066211	R4090188S	R4113442	N/A	R4578386[97]	R4578129
R44141923[381]	3-5/32 "	R42R55497	R42R55496	R4066330	R4090101S	R4113056[85]	N/A	R4577841[145]	R4578129
R44141923[381]	3-5/32 "	R42R55497	R42R55496	R4066330	R4090101S	R4113056[85]	N/A	R4578145[85]	R4578135
R44140658	15/16	R4134102	R4134102	R4166852	NR	-	-	R4577810[145]	R4577810
R44140658	15/16	R4134102	R4134102	R4166852	NR	-	-	R4577810[145]	R4577810
R44141477[405]	3-5/32 "	R42R55497	R42R55496	R4066330	R4090101S	R4113056[85]	N/A	R4578410[145]	R4578133

MAKE MODEL YEAR AXLE CODE AXLE WEIGHT	AXLE & BRK. TYPE	BRK. MFG.	BRAKE SIZE	FMSI	MERITOR DISC PAD OR BRAKE SHOE	MERITOR GUIDE PIN OR RETURN SPRING KIT	MERITOR CALIPER HWD. KIT OR RETURN SPRING KIT	MERITOR ADJUSTER KIT (LEFT WHEEL)	MERITOR ADJUSTER KIT (RIGHT WHEEL)
DODGE(Cont.)									
RAM 2500 3/4 TON PICKUP(Cont.)									
1998									
4x4									
3,500 lb.	Fd	GM		7260 - D370	MD370	R40H5083	R40H5707	NR	NR
4x4									
4,500 lb.	Fd	GM		7339 - D459	MD459	R40H5083	R40H5788	NR	NR
	Fd	GM		7339 - D459	MD459	R40H5083	R40H5788	NR	NR
1997									
4x2	Fd	GM		7260 - D370	MD370	R40H5083	R40H5707	NR	NR
	Fd	GM		7260 - D370	MD370	R40H5083	R40H5707	NR	NR
	Fd	GM		7260 - D370	MD370	R40H5083	R40H5707	NR	NR
	Ra	GM	13 " x 2-1/2 "	2042AT - 451	R46451	R40H378	R40H7055	R40H2588	R40H2589
4x4	Ra	GM	13 " x 2-1/2 "	2042AT - 451	R46451	R40H378	R40H7055	R40H2588	R40H2589
4x4									
3,500 lb.	Fd	GM		7260 - D370	MD370	R40H5083	R40H5707	NR	NR
	Fd	GM		7260 - D370	MD370	R40H5083	R40H5707	NR	NR
	Fd	GM		7260 - D370	MD370	R40H5083	R40H5707	NR	NR
4x4									
4,500 lb.	Fd	GM		7339 - D459	MD459	R40H5083	R40H5788	NR	NR
	Fd	GM		7339 - D459	MD459	R40H5083	R40H5788	NR	NR
	Fd	GM		7339 - D459	MD459	R40H5083	R40H5788	NR	NR
1996									
4x2	Fd	GM		7260 - D370	MD370	R40H5083	R40H5707	NR	NR
	Fd	GM		7260 - D370	MD370	R40H5083	R40H5707	NR	NR
	Ra	GM	13 " x 2-1/2 "	2042AT - 451	R46451	R40H378	R40H7055	R40H2588	R40H2589
4x4	Ra	GM	13 " x 2-1/2 "	2042AT - 451	R46451	R40H378	R40H7055	R40H2588	R40H2589
4x4									
3,500 lb.	Fd	GM		7260 - D370	MD370	R40H5083	R40H5707	NR	NR
	Fd	GM		7260 - D370	MD370	R40H5083	R40H5707	NR	NR
4x4									
4,500 lb.	Fd	GM		7339 - D459	MD459	R40H5083	R40H5788	NR	NR
	Fd	GM		7339 - D459	MD459	R40H5083	R40H5788	NR	NR
1995									
4x2	Fd	GM		7260 - D370	MD370	R40H5083	R40H5707	NR	NR
	Fd	GM		7260 - D370	MD370	R40H5083	R40H5707	NR	NR
	Ra	GM	13 " x 2-1/2 "	2042AT - 451	R46451	R40H378	R40H7055	R40H2588	R40H2589
4x4	Ra	GM	13 " x 2-1/2 "	2042AT - 451	R46451	R40H378	R40H7055	R40H2588	R40H2589
4x4									
3,500 lb.	Fd	GM		7260 - D370	MD370	R40H5083	R40H5707	NR	NR
	Fd	GM		7260 - D370	MD370	R40H5083	R40H5707	NR	NR
4x4									
4,500 lb.	Fd	GM		7339 - D459	MD459	R40H5083	R40H5788	NR	NR
	Fd	GM		7339 - D459	MD459	R40H5083	R40H5788	NR	NR
1994									
4x2	Fd	GM		7260 - D370	MD370	R40H5083	R40H5707	NR	NR
	Fd	GM		7260 - D370	MD370	R40H5083	R40H5707	NR	NR
	Ra	GM	13 " x 2-1/2 "	2042AT - 451	R46451	R40H378	R40H7055	R40H2588	R40H2589
4x4	Ra	GM	13 " x 2-1/2 "	2042AT - 451	R46451	R40H378	R40H7055	R40H2588	R40H2589
4x4									
3,500 lb.	Fd	GM		7260 - D370	MD370	R40H5083	R40H5707	NR	NR
	Fd	GM		7260 - D370	MD370	R40H5083	R40H5707	NR	NR
4x4									
4,500 lb.	Fd	GM		7339 - D459	MD459	R40H5083	R40H5788	NR	NR
	Fd	GM		7339 - D459	MD459	R40H5083	R40H5788	NR	NR
RAM 3500 1 TON PICKUP									
2005									
4x2	Fd	TRW		7864 - D965	MD965	R40H5735	R4011133	NR	NR
	Rd	TRW		7576 - D702	MVD702	-	-	NR	NR
4x4	Fd	TRW		7864 - D965	MD965	R40H5735	R4011133	NR	NR
	Rd	TRW		7576 - D702	MVD702	-	-	NR	NR
2004									
4x2	Fd	TRW		7864 - D965	MD965	R40H5735	R4011133	NR	NR

53 - Power Brakes
85 - 4 Wheel Antilock Brakes
144 - Rear Wheel Antilock Brakes, Bracket on Threaded End
145 - Rear Wheel Antilock Brakes, without Bracket on Threaded End
309 - Power Brakes, Hydroboost
332 - Power Brakes, Hydraulic Booster
363 - Piston includes Boots and Seals
381 - Rotor and Hub One Piece Assembly W/O ABS Ring
405 - Rotor Only

MERITOR DRUM OR ROTOR NO.	CALIPER OR CYLINDER BORE SIZE	MERITOR CALIPER OR WHEEL CYLINDER (LEFT)	MERITOR CALIPER OR WHEEL CYLINDER (RIGHT)	MERITOR CALIPER OR WHEEL CYLINDER REPAIR KIT	MERITOR CALIPER PISTON	MERITOR MASTER CYLINDER	MERITOR MASTER CYLINDER KIT	MERITOR BRAKE HOSE (LEFT)	MERITOR BRAKE HOSE (RIGHT)
									DODGE(Cont.)
									RAM 2500 3/4 TON PICKUP(Cont.)
R44141477[405]	3-5/32 "	R42R55497	R42R55496	R4066330	R4090101S	R4113056[85]	N/A	R4578144[85]	R4578133
R44141770[405]	3-25/64 "	R42R55687	R42R55688	R4066211	R4090188S	R4113057	N/A	R4578144[85]	R4578133
R44141770[405]	3-25/32 "	R42R55687	R42R55688	R4066211	R4090188S	R4113057	N/A	R4578410[145]	R4578133
R44141923[381]	3-5/32 "	R42R55497	R42R55496	R4066330	R4090101S	R4113056[85]	N/A	R4577841[145]	R4578129
R44141923[381]	3-5/32 "	R42R55497	R42R55496	R4066330	R4090101S	R4113056[85]	N/A	R4578387[144]	R4578129
R44141923[381]	3-5/32 "	R42R55497	R42R55496	R4066330	R4090101S	R4113056[85]	N/A	R4578145[85]	R4578135
R44140658	15/16	R4134102	R4134102	R4166852	NR	-	-	R4577810[145]	R4577810
R44140658	15/16	R4134102	R4134102	R4166852	NR	-	-	R4577810[145]	R4577810
R44141477[405]	3-5/32 "	R42R55497	R42R55496	R4066330	R4090101S	R4113056[85]	N/A	R4578410[145]	R4578133
R44141477[405]	3-5/32 "	R42R55497	R42R55496	R4066330	R4090101S	R4113056[85]	N/A	R4578144[85]	R4578133
R44141477[405]	3-5/32 "	R42R55497	R42R55496	R4066330	R4090101S	R4113056[85]	N/A	R4578132[144]	R4578133
R44141770[405]	3-25/32 "	R42R55687	R42R55688	R4066211	R4090188S	R4113057	N/A	R4578410[145]	R4578133
R44141770[405]	3-25/32 "	R42R55687	R42R55688	R4066211	R4090188S	R4113057	N/A	R4578132[144]	R4578133
R44141770[405]	3-25/32 "	R42R55687	R42R55688	R4066211	R4090188S	R4113057	N/A	R4578144[85]	R4578133
R44141923[381]	3-5/32 "	R42R55497	R42R55496	R4066330	R4090101S	R4113056[332]	N/A	R4577841[145]	R4578129
R44141923[381]	3-5/32 "	R42R55497	R42R55496	R4066330	R4090101S	R4113056[332]	N/A	R4578145[85]	R4578135
R44140658	15/16	R4134102	R4134102	R4166852	NR	-	-	R4577810[145]	R4577810
R44140658	15/16	R4134102	R4134102	R4166852	NR	-	-	R4577810[145]	R4577810
R44141477[405]	3-5/32 "	R42R55497	R42R55496	R4066330	R4090101S	R4113056[332]	N/A	R4578410[145]	R4578133
R44141477[405]	3-5/32 "	R42R55497	R42R55496	R4066330	R4090101S	R4113056[332]	N/A	R4578144[85]	R4578133
R44141770[405]	3-25/32 "	R42R55687	R42R55688	R4066211	R4090188S	R4113057[53]	N/A	R4578144[85]	R4578133
R44141770[405]	3-25/32 "	R42R55687	R42R55688	R4066211	R4090188S	R4113057[53]	N/A	R4578410[145]	R4578133
R44141923[381]	3-5/32 "	R42R55497	R42R55496	R4066330	R4090101S	R4113056[332]	N/A	R4578387[144]	R4578129
R44141923[381]	3-5/32 "	R42R55497	R42R55496	R4066330	R4090101S	R4113056[332]	N/A	R4577841[145]	R4578129
R44140658	15/16	R4134102	R4134102	R4166852	NR	-	-	R4577810[145]	R4577810
R44140658	15/16	R4134102	R4134102	R4166852	NR	-	-	R4577810[145]	R4577810
R44141477[405]	3-5/32 "	R42R55497	R42R55496	R4066330	R4090101S	R4113056[332]	N/A	R4578410[145]	R4578133
R44141477[405]	3-5/32 "	R42R55497	R42R55496	R4066330	R4090101S	R4113056[332]	N/A	R4578132[144]	R4578133
R44141770[405]	3-25/32 "	R42R55687	R42R55688	R4066211	R4090188S	R4113057[53]	N/A	R4578132[144]	R4578133
R44141770[405]	3-25/32 "	R42R55687	R42R55688	R4066211	R4090188S	R4113057[53]	N/A	R4578410[145]	R4578133
R44141923[381]	3-5/32 "	R42R55497	R42R55496	R4066330	R4090101S	R4112220[309]	R4122141	R4578387[144]	R4578129
R44141923[381]	3-5/32 "	R42R55497	R42R55496	R4066330	R4090101S	R4112220[309]	R4122141	R4578130[85]	R4578135
R44140658	15/16	R4134102	R4134102	R4166852	NR	-	-	R4577810[145]	R4577810
R44140658	15/16	R4134102	R4134102	R4166852	NR	-	-	R4577810[145]	R4577810
R44141477[405]	3-5/32 "	R42R55497	R42R55496	R4066330	R4090101S	R4112834[53]	N/A	R4578134[85]	R4578133
R44141477[405]	3-5/32 "	R42R55497	R42R55496	R4066330	R4090101S	R4112834[53]	N/A	R4578132[144]	R4578133
R44141770[405]	3-25/32 "	R42R55687	R42R55688	R4066211	R4090188S	R4112834[53]	N/A	R4578132[144]	R4578133
R44141770[405]	3-25/32 "	R42R55687	R42R55688	R4066211	R4090188S	R4112834[53]	N/A	R4578134[85]	R4578133
									RAM 3500 1 TON PICKUP
R44145456	56mm	R421005093269AA	R421005093266AA	R4012094	R4012093[363]	N/A	-	N/A	N/A
R44145452	45mm	R4212491	R4212490	-	-	-	-	R4578934	R4578934
R44145456	56mm	R421005093269AA	R421005093266AA	R4012094	R4012093[363]	N/A	-	N/A	N/A
R44145452	45mm	R4212491	R4212490	-	-	-	-	R4578934	R4578934
R44145456	56mm	R421005093269AA	R421005093266AA	R4012094	R4012093[363]	N/A	-	N/A	N/A

MAKE MODEL YEAR AXLE CODE AXLE WEIGHT	AXLE & BRK. TYPE	BRK. MFG.	BRAKE SIZE	FMSI	MERITOR DISC PAD OR BRAKE SHOE	MERITOR GUIDE PIN OR RETURN SPRING KIT	MERITOR CALIPER HWD. KIT OR RETURN SPRING KIT	MERITOR ADJUSTER KIT (LEFT WHEEL)	MERITOR ADJUSTER KIT (RIGHT WHEEL)
DODGE(Cont.)									
RAM 3500 1 TON PICKUP(Cont.)									
2004									
	Rd	TRW		7576 - D702	MVD702	-	-	NR	NR
4x4	Fd	TRW		7864 - D965	MD965	R40H5735	R4011133	NR	NR
	Rd	TRW		7576 - D702	MVD702	-	-	NR	NR
2003									
4x2	Rd	TRW		7576 - D702	MVD702	-	-	NR	NR
4x4	Fd	TRW		7864 - D965	MD965	R40H5735	R4011133	NR	NR
	Rd	TRW		7576 - D702	MVD702	-	-	NR	NR
2002									
4x2	Fd	TRW		7694 - D821	MD821	R40H5735	R40H5975	NR	NR
	Rd	TRW		7576 - D702	MVD702	R40H15068	R40H5974	NR	NR
4x4	Fd	TRW		7694 - D821	MD821	R40H5735	R40H5975	NR	NR
	Rd	TRW		7576 - D702	MVD702	R40H15068	R40H5974	NR	NR
2001									
4x2	Fd	TRW		7694 - D821	MD821	R40H5735	R40H5975	NR	NR
	Fd	TRW		7694 - D821	MD821	R40H5735	R40H5975	NR	NR
	Ra		12.125 x 3-1/2 "	2171T - 583	R468140	R40H7299	N/A	R40H2598	R40H2599
4x4	Fd	TRW		7694 - D821	MD821	R40H5735	R40H5975	NR	NR
	Fd	TRW		7694 - D821	MD821	R40H5735	R40H5975	NR	NR
	Ra		12.125 x 3-1/2 "	2171T - 583	R468140	R40H7299	N/A	R40H2598	R40H2599
2000									
4x2	Fd	TRW		7694 - D821	MD821	R40H5735	R40H5975	NR	NR
	Fd	TRW		7694 - D821	MD821	R40H5735	R40H5975	NR	NR
	Ra		12.125 x 3-1/2 "	2171T - 583	R468140	R40H7299	N/A	R40H2598	R40H2599
4x4	Fd	TRW		7694 - D821	MD821	R40H5735	R40H5975	NR	NR
	Fd	TRW		7694 - D821	MD821	R40H5735	R40H5975	NR	NR
	Ra		12.125 x 3-1/2 "	2171T - 583	R468140	R40H7299	N/A	R40H2598	R40H2599
1999									
4x2	Ra		13 " x 3-1/2 "	2157T - 452	R46452	R40H378	R40H7055	R40H2588	R40H2589
4x2 10,500 lb. GVW with 4 w ABS	Fd	GM		7339 - D459	MD459	R40H5083	R40H5788	NR	NR
4x2 10,500 lb. GVW with R w ABS	Fd	GM		7339 - D459	MD459	R40H5083	R40H5788	NR	NR
4x4	Fd	GM		7339 - D459	MD459	R40H5083	R40H5788	NR	NR
	Ra		13 " x 3-1/2 "	2157T - 452	R46452	R40H378	R40H7055	R40H2588	R40H2589
1998									
	Ra	GM	13 " x 3-1/2 "	2157T - 452	R46452	R40H4074	R40H378	R40H2588	R40H2589
4x2	Fd	GM		7339 - D459	MD459	R40H5083	R40H5788	NR	NR
	Fd	GM		7339 - D459	MD459	R40H5083	R40H5788	NR	NR
	Fd	GM		7339 - D459	MD459	R40H5083	R40H5788	NR	NR
	Fd	GM		7339 - D459	MD459	R40H5083	R40H5788	NR	NR
	Fd	GM		7339 - D459	MD459	R40H5083	R40H5788	NR	NR
	Fd	GM		7339 - D459	MD459	R40H5083	R40H5788	NR	NR
	Fd	GM		7339 - D459	MD459	R40H5083	R40H5788	NR	NR
	Fd	GM		7339 - D459	MD459	R40H5083	R40H5788	NR	NR
	Fd	GM		7339 - D459	MD459	R40H5083	R40H5788	NR	NR
	Ra		13 " x 3-1/2 "	2157T - 452	R46452	R40H378	R40H7055	R40H2588	R40H2589
4x2 10,500 lb. GVW with 4 w ABS	Fd	GM		7339 - D459	MD459	R40H5083	R40H5788	NR	NR
4x2 10,500 lb. GVW with R w ABS	Fd	GM		7339 - D459	MD459	R40H5083	R40H5788	NR	NR
4x4	Fd	GM		7339 - D459	MD459	R40H5083	R40H5788	NR	NR
	Fd	GM		7339 - D459	MD459	R40H5083	R40H5788	NR	NR
	Ra		13 " x 3-1/2 "	2157T - 452	R46452	R40H378	R40H7055	R40H2588	R40H2589
1997									
	Ra	GM	13 " x 3-1/2 "	2157T - 452	R46452	R40H4074	R40H378	R40H2588	R40H2589
4x2	Fd	GM		7339 - D459	MD459	R40H5083	R40H5788	NR	NR
	Fd	GM		7339 - D459	MD459	R40H5083	R40H5788	NR	NR
	Fd	GM		7339 - D459	MD459	R40H5083	R40H5788	NR	NR
	Fd	GM		7339 - D459	MD459	R40H5083	R40H5788	NR	NR
	Fd	GM		7339 - D459	MD459	R40H5083	R40H5788	NR	NR
	Fd	GM		7339 - D459	MD459	R40H5083	R40H5788	NR	NR

48 - 4x2, Rear Wheel Antilock Brakes with 10,500 lb. GVW
144 - Rear Wheel Antilock Brakes, Bracket on Threaded End
158 - 4x4, With Antilock Brakes
53 - Power Brakes
153 - 4x2, With 4 Wheel Antilock Brakes
183 - With Rear Wheel Antilock Brakes
85 - 4 Wheel Antilock Brakes
154 - 4x2, With Rear Wheel Antilock Brakes
305 - 4x2, All Wheel Antilock Brakes with 10,500 lb. GVW

MERITOR DRUM OR ROTOR NO.	CALIPER OR CYLINDER BORE SIZE	MERITOR CALIPER OR WHEEL CYLINDER (LEFT)	MERITOR CALIPER OR WHEEL CYLINDER (RIGHT)	MERITOR CALIPER OR WHEEL CYLINDER REPAIR KIT	MERITOR CALIPER PISTON	MERITOR MASTER CYLINDER	MERITOR MASTER CYLINDER KIT	MERITOR BRAKE HOSE (LEFT)	MERITOR BRAKE HOSE (RIGHT)
									DODGE(Cont.)
									RAM 3500 1 TON PICKUP(Cont.)
R44145452	45mm	R4212491	R4212490	-	-	-	-	R4578934	R4578934
R44145456	56mm	R421005093269AA	R421005093266AA	R4012094	R4012093[363]	N/A	-	N/A	N/A
R44145452	45mm	R4212491	R4212490	-	-	-	-	R4578934	R4578934
R44145452	45mm	R4212491	R4212490	-	-	-	-	R4578934	R4578934
R44145456	56mm	R421005093269AA	R421005093266AA	R4012094	R4012093[363]	N/A	-	N/A	N/A
R44145452	45mm	R4212491	R4212490	-	-	-	-	R4578934	R4578934
R44145283	56mm	R4255890	R4255889	R4012094	R4012093[363]	N/A	N/A	R4512407[153]	R4512408
R44145357	51mm	R4255973	R4255972	R4012234	R4012233[363]	-	-	R4578885	R4578885
R44145283	56mm	R4255890	R4255889	R4012094	R4012093[363]	N/A	N/A	R4512409[158]	R4512410
R44145357	51mm	R4255973	R4255972	R4012234	R4012233[363]	-	-	R4578885	R4578885
R44145283	56mm	R4255890	R4255889	R4012094	R4012093[363]	R4113442	N/A	R4512407[153]	R4512408
R44145283	56mm	R4255890	R4255889	R4012094	R4012093[363]	R4113442	N/A	R4578899[154]	R4578898
R44140729	1 "	R4133004	R4133005	R4166822	NR	-	-	R4578885	R4578885
R44145283	56mm	R4255890	R4255889	R4012094	R4012093[363]	R4113442	N/A	R4512409[158]	R4512410
R44145283	56mm	R4255890	R4255889	R4012094	R4012093[363]	R4113442	N/A	R4512411[183]	R4512412
R44140729	1 "	R4133004	R4133005	R4166822	NR	-	-	R4578885	R4578885
R44145283	56mm	R4255890	R4255889	R4012094	R4012093[363]	R4113442	N/A	R4578899[154]	R4578898
R44145283	56mm	R4255890	R4255889	R4012094	R4012093[363]	R4113442	N/A	R4512407[153]	R4512408
R44140729	1 "	R4133004	R4133005	R4166822	NR	-	-	R4578885	R4578885
R44145283	56mm	R4255890	R4255889	R4012094	R4012093[363]	R4113442	N/A	R4512409[158]	R4512410
R44145283	56mm	R4255890	R4255889	R4012094	R4012093[363]	R4113442	N/A	R4512411[183]	R4512412
R44140729	1 "	R4133004	R4133005	R4166822	NR	-	-	R4578885	R4578885
R44140657	1-1/16 "	R4133709	R4133709	R4166872	NR	-	-	R4578085	R4578085
R44145108[381]	3-25/32 "	R42R55687	R42R55688	R4066211	R4090188S	R4113057[364]	N/A	R4578145[153]	R4578410
R449886[381]	3-25/32 "	R42R55687	R42R55688	R4066211	R4090188S	R4113057[364]	N/A	R4578386[154]	R4578129
R44141770[405]	3-25/32 "	R42R55687	R42R55688	R4066211	R4090188S	R4113057[364]	N/A	R4578410	R4578133
R44140657	1-1/16 "	R4133709	R4133709	R4166872	NR	-	-	R4578085	R4578085
R44140657	1-1/16 "	R4133709	R4133709	N/A	NR	-	-	R4577810	R4577810
R44141770[310]	3-25/32 "	R42R55687	R42R55688	R4066211	R4090188S	R4112834[53]	N/A	R4578132[144]	R4578133
R44141770[310]	3-25/32 "	R42R55687	R42R55688	R4066211	R4090188S	R4112834[53]	N/A	R4578134[85]	R4578133
R44141770[310]	3-25/32 "	R42R55687	R42R55688	R4066211	R4090188S	R4112834[53]	N/A	R4578387[144]	R4578129
R44141927[48]	3-25/32 "	R42R55687	R42R55688	R4066211	R4090188S	R4112834[53]	N/A	R4578134[85]	R4578133
R44141927[48]	3-25/32 "	R42R55687	R42R55688	R4066211	R4090188S	R4112834[53]	N/A	R4578387[144]	R4578129
R44145108[305]	3-25/32 "	R42R55687	R42R55688	R4066211	R4090188S	R4112834[53]	N/A	R4578134[85]	R4578133
R44141927[48]	3-25/32 "	R42R55687	R42R55688	R4066211	R4090188S	R4112834[53]	N/A	R4578132[144]	R4578133
R44145108[305]	3-25/32 "	R42R55687	R42R55688	R4066211	R4090188S	R4112834[53]	N/A	R4578132[144]	R4578133
R44145108[305]	3-25/32 "	R42R55687	R42R55688	R4066211	R4090188S	R4112834[53]	N/A	R4578387[144]	R4578129
R44140657	1-1/16 "	R4133709	R4133709	R4166872	NR	-	-	R4578085	R4578085
R44145108[381]	3-25/32 "	R42R55687	R42R55688	R4066211	R4090188S	R4113057[364]	N/A	R4578145[153]	R4578410
R449886[381]	3-25/32 "	R42R55687	R42R55688	R4066211	R4090188S	R4113057[364]	N/A	R4578386[154]	R4578129
R44141770[405]	3-25/32 "	R42R55687	R42R55688	R4066211	R4090188S	R4113057[364]	N/A	R4578410	R4578133
R44141770[310]	3-25/32 "	R42R55687	R42R55688	R4066211	R4090188S	R4112834[53]	N/A	R4578132[144]	R4578133
R44140657	1-1/16 "	R4133709	R4133709	R4166872	NR	-	-	R4578085	R4578085
R44140657	1-1/16 "	R4133709	R4133709	N/A	NR	-	-	R4577810	R4577810
R44141770[310]	3-25/32 "	R42R55687	R42R55688	R4066211	R4090188S	R4112834[53]	N/A	R4578134[85]	R4578133
R44141770[310]	3-25/32 "	R42R55687	R42R55688	R4066211	R4090188S	R4112834[53]	N/A	R4578387[144]	R4578129
R44141770[310]	3-25/32 "	R42R55687	R42R55688	R4066211	R4090188S	R4112834[53]	N/A	R4578132[144]	R4578133
R44141927[48]	3-25/32 "	R42R55687	R42R55688	R4066211	R4090188S	R4112834[53]	N/A	R4578134[85]	R4578133
R44141927[48]	3-25/32 "	R42R55687	R42R55688	R4066211	R4090188S	R4112834[53]	N/A	R4578387[144]	R4578129
R44141927[48]	3-25/32 "	R42R55687	R42R55688	R4066211	R4090188S	R4112834[53]	N/A	R4578132[144]	R4578133

310 - Rotor Only, 4x2 and 4x4: All with 11,000 lb. GVW
381 - Rotor and Hub One Piece Assembly W/O ABS Ring
363 - Piston includes Boots and Seals
405 - Rotor Only
364 - Gas Engine Only

MAKE MODEL YEAR AXLE CODE AXLE WEIGHT	AXLE & BRK. TYPE	BRK. MFG.	BRAKE SIZE	FMSI	MERITOR DISC PAD OR BRAKE SHOE	MERITOR GUIDE PIN OR RETURN SPRING KIT	MERITOR CALIPER HWD. KIT OR RETURN SPRING KIT	MERITOR ADJUSTER KIT (LEFT WHEEL)	MERITOR ADJUSTER KIT (RIGHT WHEEL)
DODGE(Cont.)									
RAM 3500 1 TON PICKUP(Cont.)									
1997									
	Fd	GM		7339 - D459	MD459	R40H5083	R40H5788	NR	NR
	Fd	GM		7339 - D459	MD459	R40H5083	R40H5788	NR	NR
	Fd	GM		7339 - D459	MD459	R40H5083	R40H5788	NR	NR
	Ra		13 " x 3-1/2 "	2157T - 452	R46452	R40H378	R40H7055	R40H2588	R40H2589
4x2 10,500 lb. GVW with 4 w ABS	Fd	GM		7339 - D459	MD459	R40H5083	R40H5788	NR	NR
4x2 10,500 lb. GVW with R w ABS	Fd	GM		7339 - D459	MD459	R40H5083	R40H5788	NR	NR
4x2 11,000 lb. GVW	Fd	GM		7339 - D459	MD459	R40H5083	R40H5788	NR	NR
4x4	Fd	GM		7339 - D459	MD459	R40H5083	R40H5788	NR	NR
	Fd	GM		7339 - D459	MD459	R40H5083	R40H5788	NR	NR
	Ra		13 " x 3-1/2 "	2157T - 452	R46452	R40H378	R40H7055	R40H2588	R40H2589
1996									
	Ra	GM	13 " x 3-1/2 "	2157T - 452	R46452	R40H4074	R40H378	R40H2588	R40H2589
4x2	Fd	GM		7339 - D459	MD459	R40H5083	R40H5788	NR	NR
	Fd	GM		7339 - D459	MD459	R40H5083	R40H5788	NR	NR
	Fd	GM		7339 - D459	MD459	R40H5083	R40H5788	NR	NR
	Fd	GM		7339 - D459	MD459	R40H5083	R40H5788	NR	NR
	Fd	GM		7339 - D459	MD459	R40H5083	R40H5788	NR	NR
	Fd	GM		7339 - D459	MD459	R40H5083	R40H5788	NR	NR
	Fd	GM		7339 - D459	MD459	R40H5083	R40H5788	NR	NR
	Fd	GM		7339 - D459	MD459	R40H5083	R40H5788	NR	NR
	Fd	GM		7339 - D459	MD459	R40H5083	R40H5788	NR	NR
4x4	Fd	GM		7339 - D459	MD459	R40H5083	R40H5788	NR	NR
1995									
	Ra	GM	13 " x 3-1/2 "	2157T - 452	R46452	R40H4074	R40H378	R40H2588	R40H2589
4x2	Fd	GM		7339 - D459	MD459	R40H5083	R40H5788	NR	NR
	Fd	GM		7339 - D459	MD459	R40H5083	R40H5788	NR	NR
	Fd	GM		7339 - D459	MD459	R40H5083	R40H5788	NR	NR
	Fd	GM		7339 - D459	MD459	R40H5083	R40H5788	NR	NR
	Fd	GM		7339 - D459	MD459	R40H5083	R40H5788	NR	NR
	Fd	GM		7339 - D459	MD459	R40H5083	R40H5788	NR	NR
	Fd	GM		7339 - D459	MD459	R40H5083	R40H5788	NR	NR
	Fd	GM		7339 - D459	MD459	R40H5083	R40H5788	NR	NR
	Fd	GM		7339 - D459	MD459	R40H5083	R40H5788	NR	NR
4x4	Fd	GM		7339 - D459	MD459	R40H5083	R40H5788	NR	NR
1994									
	Ra	GM	13 " x 3-1/2 "	2157T - 452	R46452	R40H4074	R40H378	R40H2588	R40H2589
4x2	Fd	GM		7339 - D459	MD459	R40H5083	R40H5788	NR	NR
	Fd	GM		7339 - D459	MD459	R40H5083	R40H5788	NR	NR
	Fd	GM		7339 - D459	MD459	R40H5083	R40H5788	NR	NR
	Fd	GM		7339 - D459	MD459	R40H5083	R40H5788	NR	NR
	Fd	GM		7339 - D459	MD459	R40H5083	R40H5788	NR	NR
	Fd	GM		7339 - D459	MD459	R40H5083	R40H5788	NR	NR
	Fd	GM		7339 - D459	MD459	R40H5083	R40H5788	NR	NR
	Fd	GM		7339 - D459	MD459	R40H5083	R40H5788	NR	NR
	Fd	GM		7339 - D459	MD459	R40H5083	R40H5788	NR	NR
4x4	Fd	GM		7339 - D459	MD459	R40H5083	R40H5788	NR	NR
SPRINTER VAN 2500									
2005									
118 W. B.	Fd	ATE		7849 - D950	MD950	NR	NR	NR	NR
	Fd	Bosch		7848 - D949	MD949	NR	NR	NR	NR
	Fd	Bosch		7848 - D949	MD949	NR	NR	NR	NR
	Fd	Wabco		7848 - D949	MD949	-	-	NR	NR
	Fd	Wabco		7848 - D949	MD949	-	-	NR	NR
	Rd	Bosch		7829 - D928	MD928	NR	NR	NR	NR
	Rd	Bosch		7829 - D928	MD928	NR	NR	NR	NR
	Rd	Wabco		7848 - D949	MD949	-	-	NR	NR
	Rd	Wabco		7848 - D949	MD949	-	-	NR	NR
140 WB	Fd	ATE		7849 - D950	MD950	NR	NR	NR	NR
	Fd	Bosch		7848 - D949	MD949	NR	NR	NR	NR
	Fd	Bosch		7848 - D949	MD949	NR	NR	NR	NR
	Fd	Wabco		7848 - D949	MD949	-	-	NR	NR

48 - 4x2, Rear Wheel Antilock Brakes with 10,500 lb. GVW
144 - Rear Wheel Antilock Brakes, Bracket on Threaded End
305 - 4x2, All Wheel Antilock Brakes with 10,500 lb. GVW
53 - Power Brakes
153 - 4x2, With 4 Wheel Antilock Brakes
310 - Rotor Only, 4x2 and 4x4: All with 11,000 lb. GVW
85 - 4 Wheel Antilock Brakes
154 - 4x2, With Rear Wheel Antilock Brakes
364 - Gas Engine Only

MERITOR DRUM OR ROTOR NO.	CALIPER OR CYLINDER BORE SIZE	MERITOR CALIPER OR WHEEL CYLINDER (LEFT)	MERITOR CALIPER OR WHEEL CYLINDER (RIGHT)	MERITOR CALIPER OR WHEEL CYLINDER REPAIR KIT	MERITOR CALIPER PISTON	MERITOR MASTER CYLINDER	MERITOR MASTER CYLINDER KIT	MERITOR BRAKE HOSE (LEFT)	MERITOR BRAKE HOSE (RIGHT)
									DODGE(Cont.)
									RAM 3500 1 TON PICKUP(Cont.)
R44145108[305]	3-25/32 "	R42R55687	R42R55688	R4066211	R4090188S	R4112834[53]	N/A	R4578387[144]	R4578129
R44145108[305]	3-25/32 "	R42R55687	R42R55688	R4066211	R4090188S	R4112834[53]	N/A	R4578134[85]	R4578133
R44145108[305]	3-25/32 "	R42R55687	R42R55688	R4066211	R4090188S	R4112834[53]	N/A	R4578132[144]	R4578133
R44140657	1-1/16 "	R4133709	R4133709	R4166872	NR	-	-	R4578085	R4578085
R44145108[381]	3-25/32 "	R42R55687	R42R55688	R4066211	R4090188S	R4113057[364]	N/A	R4578145[153]	R4578410
R449886[381]	3-25/32 "	R42R55687	R42R55688	R4066211	R4090188S	R4113057[364]	N/A	R4578386[154]	R4578129
R44141770[405]	3-25/32 "	R42R55687	R42R55688	R4066211	R4090188S	R4113057[364]	N/A	N/A	N/A
R44141770[405]	3-25/32 "	R42R55687	R42R55688	R4066211	R4090188S	R4113057[364]	N/A	R4578410	R4578133
R44141770[310]	3-25/32 "	R42R55687	R42R55688	R4066211	R4090188S	R4112834[53]	N/A	R4578132[144]	R4578133
R44140657	1-1/16 "	R4133709	R4133709	R4166872	NR	-	-	R4578085	R4578085
R44140657	1-1/16 "	R4133709	R4133709	N/A	NR	-	-	R4577810	R4577810
R44141770[310]	3-25/32 "	R42R55687	R42R55688	R4066211	R4090188S	R4112834[53]	N/A	R4578387[144]	R4578129
R44141927[48]	3-25/32 "	R42R55687	R42R55688	R4066211	R4090188S	R4112834[53]	N/A	R4578132[144]	R4578133
R44141927[48]	3-25/32 "	R42R55687	R42R55688	R4066211	R4090188S	R4112834[53]	N/A	R4578134[85]	R4578133
R44141770[310]	3-25/32 "	R42R55687	R42R55688	R4066211	R4090188S	R4112834[53]	N/A	R4578132[144]	R4578133
R44141927[48]	3-25/32 "	R42R55687	R42R55688	R4066211	R4090188S	R4112834[53]	N/A	R4578387[144]	R4578129
R44141770[310]	3-25/32 "	R42R55687	R42R55688	R4066211	R4090188S	R4112834[53]	N/A	R4578134[85]	R4578133
R44145108[305]	3-25/32 "	R42R55687	R42R55688	R4066211	R4090188S	R4112834[53]	N/A	R4578387[144]	R4578129
R44145108[305]	3-25/32 "	R42R55687	R42R55688	R4066211	R4090188S	R4112834[53]	N/A	R4578134[85]	R4578133
R44145108[305]	3-25/32 "	R42R55687	R42R55688	R4066211	R4090188S	R4112834[53]	N/A	R4578132[144]	R4578133
R44141770[310]	3-25/32 "	R42R55687	R42R55688	R4066211	R4090188S	R4112834[53]	N/A	R4578132[144]	R4578133
R44140657	1-1/16 "	R4133709	R4133709	N/A	NR	-	-	R4577810	R4577810
R44141927[48]	3-25/32 "	R42R55687	R42R55688	R4066211	R4090188S	R4112834[53]	N/A	R4578132[144]	R4578133
R44141927[48]	3-25/32 "	R42R55687	R42R55688	R4066211	R4090188S	R4112834[53]	N/A	R4578387[144]	R4578129
R44145108[305]	3-25/32 "	R42R55687	R42R55688	R4066211	R4090188S	R4112834[53]	N/A	R4578387[144]	R4578129
R44145108[305]	3-25/32 "	R42R55687	R42R55688	R4066211	R4090188S	R4112834[53]	N/A	R4578132[144]	R4578133
R44141770[310]	3-25/32 "	R42R55687	R42R55688	R4066211	R4090188S	R4112834[53]	N/A	R4578132[144]	R4578133
R44141770[310]	3-25/32 "	R42R55687	R42R55688	R4066211	R4090188S	R4112834[53]	N/A	R4578387[144]	R4578129
R44145108[305]	3-25/32 "	R42R55687	R42R55688	R4066211	R4090188S	R4112834[53]	N/A	R4578134[85]	R4578133
R44141927[48]	3-25/32 "	R42R55687	R42R55688	R4066211	R4090188S	R4112834[53]	N/A	R4578134[85]	R4578133
R44141770[310]	3-25/32 "	R42R55687	R42R55688	R4066211	R4090188S	R4112834[53]	N/A	R4578134[85]	R4578133
R44141770[310]	3-25/32 "	R42R55687	R42R55688	R4066211	R4090188S	R4112834[53]	N/A	R4578132[144]	R4578133
R44140657	1-1/16 "	R4133709	R4133709	N/A	NR	-	-	R4577810	R4577810
R44141770[310]	3-25/32 "	R42R55687	R42R55688	R4066211	R4090188S	R4112834[53]	N/A	R4578132[144]	R4578133
R44145108[305]	3-25/32 "	R42R55687	R42R55688	R4066211	R4090188S	R4112834[53]	N/A	R4578132[144]	R4578133
R44141927[48]	3-25/32 "	R42R55687	R42R55688	R4066211	R4090188S	R4112834[53]	N/A	R4578134[85]	R4578133
R44145108[305]	3-25/32 "	R42R55687	R42R55688	R4066211	R4090188S	R4112834[53]	N/A	R4578134[85]	R4578133
R44145108[305]	3-25/32 "	R42R55687	R42R55688	R4066211	R4090188S	R4112834[53]	N/A	R4578387[144]	R4578129
R44141927[48]	3-25/32 "	R42R55687	R42R55688	R4066211	R4090188S	R4112834[53]	N/A	R4578387[144]	R4578129
R44141770[310]	3-25/32 "	R42R55687	R42R55688	R4066211	R4090188S	R4112834[53]	N/A	R4578387[144]	R4578129
R44141927[48]	3-25/32 "	R42R55687	R42R55688	R4066211	R4090188S	R4112834[53]	N/A	R4578132[144]	R4578133
R44141770[310]	3-25/32 "	R42R55687	R42R55688	R4066211	R4090188S	R4112834[53]	N/A	R4578134[85]	R4578133
R44141770[310]	3-25/32 "	R42R55687	R42R55688	R4066211	R4090188S	R4112834[53]	N/A	R4578132[144]	R4578133
									SPRINTER VAN 2500
-	60mm	-	-	-	-	-	-	R4512290	R4512291
R4421503R	45mm	-	-	-	-	-	-	R4512290	R4512291
R4421513R	45mm	-	-	-	-	-	-	R4512290	R4512291
R4421503R	44mm	R4256544	R4256545	N/A	N/A	-	-	R4512290	R4512291
R4421513R	44mm	R4256544	R4256545	N/A	N/A	-	-	R4512290	R4512291
R4412287	52mm	-	-	-	-	-	-	R4512292	R4512292
R4412289	52mm	-	-	-	-	-	-	R4512292	R4512292
R4412289	44mm	R4256544	R4256545	N/A	N/A	-	-	R4512292	R4512292
R4412287	44mm	R4256544	R4256545	N/A	N/A	-	-	R4512292	R4512292
-	60mm	-	-	-	-	-	-	R4512290	R4512291
R4421503R	45mm	-	-	-	-	-	-	R4512290	R4512291
R4421513R	45mm	-	-	-	-	-	-	R4512290	R4512291
R4421503R	44mm	R4256544	R4256545	N/A	N/A	-	-	R4512290	R4512291

381 - Rotor and Hub One Piece Assembly W/O ABS Ring 405 - Rotor Only

MAKE MODEL YEAR AXLE CODE AXLE WEIGHT	AXLE & BRK. TYPE	BRK. MFG.	BRAKE SIZE	FMSI	MERITOR DISC PAD OR BRAKE SHOE	MERITOR GUIDE PIN OR RETURN SPRING KIT	MERITOR CALIPER HWD. KIT OR RETURN SPRING KIT	MERITOR ADJUSTER KIT (LEFT WHEEL)	MERITOR ADJUSTER KIT (RIGHT WHEEL)
DODGE(Cont.)									
SPRINTER VAN 2500(Cont.)									
2005									
	Fd	Wabco		7848 - D949	MD949	-	-	NR	NR
	Rd	Bosch		7829 - D928	MD928	NR	NR	NR	NR
	Rd	Bosch		7829 - D928	MD928	NR	NR	NR	NR
	Rd	Wabco		7848 - D949	MD949	-	-	NR	NR
	Rd	Wabco		7848 - D949	MD949	-	-	NR	NR
2004									
118 W. B.	Fd	ATE		7849 - D950	MD950	NR	NR	NR	NR
	Fd	Bosch		7848 - D949	MD949	NR	NR	NR	NR
	Fd	Bosch		7848 - D949	MD949	NR	NR	NR	NR
	Fd	Wabco		7848 - D949	MD949	-	-	NR	NR
	Fd	Wabco		7848 - D949	MD949	-	-	NR	NR
	Rd	Bosch		7829 - D928	MD928	NR	NR	NR	NR
	Rd	Bosch		7829 - D928	MD928	NR	NR	NR	NR
	Rd	Wabco		7848 - D949	MD949	-	-	NR	NR
	Rd	Wabco		7848 - D949	MD949	-	-	NR	NR
140 WB	Fd	ATE		7849 - D950	MD950	NR	NR	NR	NR
	Fd	Bosch		7848 - D949	MD949	NR	NR	NR	NR
	Fd	Bosch		7848 - D949	MD949	NR	NR	NR	NR
	Fd	Wabco		7848 - D949	MD949	-	-	NR	NR
	Fd	Wabco		7848 - D949	MD949	-	-	NR	NR
	Rd	Bosch		7829 - D928	MD928	NR	NR	NR	NR
	Rd	Bosch		7829 - D928	MD928	NR	NR	NR	NR
	Rd	Wabco		7848 - D949	MD949	-	-	NR	NR
	Rd	Wabco		7848 - D949	MD949	-	-	NR	NR
2003									
118 W. B.	Fd	ATE		7849 - D950	MD950	NR	NR	NR	NR
	Fd	Bosch		7848 - D949	MD949	NR	NR	NR	NR
	Fd	Bosch		7848 - D949	MD949	NR	NR	NR	NR
	Fd	Wabco		7848 - D949	MD949	-	-	NR	NR
	Fd	Wabco		7848 - D949	MD949	-	-	NR	NR
	Rd	Bosch		7829 - D928	MD928	NR	NR	NR	NR
	Rd	Bosch		7829 - D928	MD928	NR	NR	NR	NR
	Rd	Wabco		7848 - D949	MD949	-	-	NR	NR
	Rd	Wabco		7848 - D949	MD949	-	-	NR	NR
140 WB	Fd	ATE		7849 - D950	MD950	NR	NR	NR	NR
	Fd	Bosch		7848 - D949	MD949	NR	NR	NR	NR
	Fd	Bosch		7848 - D949	MD949	NR	NR	NR	NR
	Fd	Wabco		7848 - D949	MD949	-	-	NR	NR
	Fd	Wabco		7848 - D949	MD949	-	-	NR	NR
	Rd	Bosch		7829 - D928	MD928	NR	NR	NR	NR
	Rd	Bosch		7829 - D928	MD928	NR	NR	NR	NR
	Rd	Wabco		7848 - D949	MD949	-	-	NR	NR
	Rd	Wabco		7848 - D949	MD949	-	-	NR	NR
SPRINTER VAN 3500									
2005									
	Fd	Wabco		7848 - D949	MD949	-	-	NR	NR
	Fd	Wabco		7848 - D949	MD949	-	-	NR	NR
	Rd	Wabco		7848 - D949	MD949	-	-	NR	NR
158 W.B	Fd	Wabco		7848 - D949	MD949	-	-	NR	NR
	Fd	Wabco		7848 - D949	MD949	-	-	NR	NR
	Rd	Wabco		7848 - D949	MD949	-	-	NR	NR
W200,W250, PW200, PW250 SERIES 4WD PICKUP-3/4 TON									
1993									
	Fd	BX		7081 - D149	MD149	R40H5010	R40H5529	NR	NR
	Ra	BX	11 " x 2-1/2 "	2025T - 446	R46446	R40H111	R407999	R40H2534	R40H2535
	Ra	BX	12 " x 3 "	2140AT - 358	R46358	R40H547	R40H4087	R40H2598	R40H2599
Except 4500 lb.	Fd	KH		7179 - D269	MD269	NR	R40H5516	NR	NR
4,500 lb.	Fd	BX		7081 - D149	MD149	R40H5010	R40H5529	NR	NR
	Fd	BX		7081 - D149	MD149	R40H5010	R40H5529	NR	NR
	Fd	BX		7081 - D149	MD149	R40H5010	R40H5529	NR	NR
	Fd	BX		7081 - D149	MD149	R40H5010	R40H5529	NR	NR
	Fd	BX		7081 - D149	MD149	R40H5010	R40H5529	NR	NR
	Fd	BX		7081 - D149	MD149	R40H5010	R40H5529	NR	NR

44 - R44141664 is rotor only, for hub only use E-8396

53 - Power Brakes

83 - 5" Bolt Circle

93 - Rotor Only with Hub Casting # 99756

137 - Tee

138 - Tee Hose Not Available

333 - Except 9 1/4" Ring Gear

346 - 4500 lb. Casting Number 2238451452, 10mm Inlet

351 - 1/2" Studs, 4500 lb. Axle, Rotor Casting Number 100353, Hub Casting Number 102764

MERITOR DRUM OR ROTOR NO.	CALIPER OR CYLINDER BORE SIZE	MERITOR CALIPER OR WHEEL CYLINDER (LEFT)	MERITOR CALIPER OR WHEEL CYLINDER (RIGHT)	MERITOR CALIPER OR WHEEL CYLINDER REPAIR KIT	MERITOR CALIPER PISTON	MERITOR MASTER CYLINDER	MERITOR MASTER CYLINDER KIT	MERITOR BRAKE HOSE (LEFT)	MERITOR BRAKE HOSE (RIGHT)
DODGE(Cont.)									
SPRINTER VAN 2500(Cont.)									
R4421513R	44mm	R4256544	R4256545	N/A	N/A	-	-	R4512290	R4512291
R4412289	52mm	-	-	-	-	-	-	R4512292	R4512292
R4412287	52mm	-	-	-	-	-	-	R4512292	R4512292
R4412289	44mm	R4256544	R4256545	N/A	N/A	-	-	R4512292	R4512292
R4412287	44mm	R4256544	R4256545	N/A	N/A	-	-	R4512292	R4512292
-	60mm	-	-	-	-	-	-	R4512290	R4512291
R4421513R	45mm	-	-	-	-	-	-	R4512290	R4512291
R4421503R	45mm	-	-	-	-	-	-	R4512290	R4512291
R4421503R	44mm	R4256544	R4256545	N/A	N/A	-	-	R4512290	R4512291
R4421513R	44mm	R4256544	R4256545	N/A	N/A	-	-	R4512290	R4512291
R4412289	52mm	-	-	-	-	-	-	R4512292	R4512292
R4412287	52mm	-	-	-	-	-	-	R4512292	R4512292
R4412289	44mm	R4256544	R4256545	N/A	N/A	-	-	R4512292	R4512292
R4412287	44mm	R4256544	R4256545	N/A	N/A	-	-	R4512292	R4512292
-	60mm	-	-	-	-	-	-	R4512290	R4512291
R4421503R	45mm	-	-	-	-	-	-	R4512290	R4512291
R4421513R	45mm	-	-	-	-	-	-	R4512290	R4512291
R4421503R	44mm	R4256544	R4256545	N/A	N/A	-	-	R4512290	R4512291
R4421513R	44mm	R4256544	R4256545	N/A	N/A	-	-	R4512290	R4512291
R4412289	52mm	-	-	-	-	-	-	R4512292	R4512292
R4412287	52mm	-	-	-	-	-	-	R4512292	R4512292
R4412287	44mm	R4256544	R4256545	N/A	N/A	-	-	R4512292	R4512292
R4412289	44mm	R4256544	R4256545	N/A	N/A	-	-	R4512292	R4512292
-	60mm	-	-	-	-	-	-	R4512290	R4512291
R4421503R	45mm	-	-	-	-	-	-	R4512290	R4512291
R4421513R	45mm	-	-	-	-	-	-	R4512290	R4512291
R4421503R	44mm	R4256544	R4256545	N/A	N/A	-	-	R4512290	R4512291
R4421513R	44mm	R4256544	R4256545	N/A	N/A	-	-	R4512290	R4512291
R4412289	52mm	-	-	-	-	-	-	R4512292	R4512292
R4412287	52mm	-	-	-	-	-	-	R4512292	R4512292
R4412289	44mm	R4256544	R4256545	N/A	N/A	-	-	R4512292	R4512292
R4412287	44mm	R4256544	R4256545	N/A	N/A	-	-	R4512292	R4512292
-	60mm	-	-	-	-	-	-	R4512290	R4512291
R4421503R	45mm	-	-	-	-	-	-	R4512290	R4512291
R4421513R	45mm	-	-	-	-	-	-	R4512290	R4512291
R4421503R	44mm	R4256544	R4256545	N/A	N/A	-	-	R4512290	R4512291
R4421513R	44mm	R4256544	R4256545	N/A	N/A	-	-	R4512290	R4512291
R4412287	52mm	-	-	-	-	-	-	R4512292	R4512292
R4412289	52mm	-	-	-	-	-	-	R4512292	R4512292
R4412289	44mm	R4256544	R4256545	N/A	N/A	-	-	R4512292	R4512292
R4412287	44mm	R4256544	R4256545	N/A	N/A	-	-	R4512292	R4512292
SPRINTER VAN 3500									
R4421513R	44mm	R4256544	R4256545	N/A	N/A	-	-	R4512290	R4512291
R4421503R	44mm	R4256544	R4256545	N/A	N/A	-	-	R4512290	R4512291
R4412288	44mm	R4256544	R4256545	N/A	N/A	-	-	R4512292	R4512292
R4421513R	44mm	R4256544	R4256545	N/A	N/A	-	-	R4512290	R4512291
R4421503R	44mm	R4256544	R4256545	N/A	N/A	-	-	R4512290	R4512291
R4412288	44mm	R4256544	R4256545	N/A	N/A	-	-	R4512292	R4512292
W200,W250, PW200, PW250 SERIES 4WD PICKUP-3/4 TON									
N/A	3-3/8 "	R42R55200	R42R55199[346]	R4066780	R4090021	R4111775[53]	R4122596	R4577024[138]	R4577024
R441404090[83]	15/16 "	R4133597	R4133597	R4166852	NR	-	-	-	-
R44140264[333]	1-1/8 "	R4133206	R4133207	R418187	NR	-	-	-	-
R44141664[44]	3-3/32 "	R42R55119	R42R55118	R4066587	R4090018P	-	-	-	-
R44141397[93]	3-3/8 "	R42R55200	R42R55199[346]	R4066780	R4090021	-	-	-	-
R44141468[352]	3-3/8 "	R42R55200	R42R55199[346]	R4066780	R4090021	R4111775[53]	R4122596	R4577921[137]	N/A
R44141468[352]	3-3/8 "	R42R55200	R42R55199[346]	R4066780	R4090021	R4111775[53]	R4122596	R4577171[137]	N/A
R44141397[93]	3-3/8 "	R42R55200	R42R55199[346]	R4066780	R4090021	R4111775[53]	R4122596	R4577921[137]	N/A
R44141397[93]	3-3/8 "	R42R55200	R42R55199[346]	R4066780	R4090021	R4111775[53]	R4122596	R4577024[138]	R4577024
R44141469[351]	3-3/8 "	R42R55200	R42R55199[346]	R4066780	R4090021	R4111775[53]	R4122596	R4577024[138]	R4577024

352 - 5/8" Studs, 4500 lb. Axle, Rotor Casting Number 100353, Hub Casting Number 102762

MAKE MODEL YEAR AXLE CODE AXLE WEIGHT	AXLE & BRK. TYPE	BRK. MFG.	BRAKE SIZE	FMSI	MERITOR DISC PAD OR BRAKE SHOE	MERITOR GUIDE PIN OR RETURN SPRING KIT	MERITOR CALIPER HWD. KIT OR RETURN SPRING KIT	MERITOR ADJUSTER KIT (LEFT WHEEL)	MERITOR ADJUSTER KIT (RIGHT WHEEL)
DODGE(Cont.)									
W200,W250, PW200, PW250 SERIES 4WD PICKUP-3/4 TON(Cont.)									
1993									
	Fd	BX		7081 - D149	MD149	R40H5010	R40H5529	NR	NR
	Fd	BX		7081 - D149	MD149	R40H5010	R40H5529	NR	NR
	Fd	BX		7081 - D149	MD149	R40H5010	R40H5529	NR	NR
	Fd	BX		7081 - D149	MD149	R40H5010	R40H5529	NR	NR
	Fd	BX		7081 - D149	MD149	R40H5010	R40H5529	NR	NR
	Fd	BX		7081 - D149	MD149	R40H5010	R40H5529	NR	NR
	Fd	BX		7081 - D149	MD149	R40H5010	R40H5529	NR	NR
	Fd	BX		7081 - D149	MD149	R40H5010	R40H5529	NR	NR
	Fd	BX		7081 - D149	MD149	R40H5010	R40H5529	NR	NR
	Fd	BX		7081 - D149	MD149	R40H5010	R40H5529	NR	NR
	Fd	BX		7081 - D149	MD149	R40H5010	R40H5529	NR	NR
5,500, 5,800 lb.	Ra	BX	12 " x 2-1/2 "	2146AT - 357	R46357	R40H547	R40H4087	R40H2598	R40H2599
6200 lb.	Ra	BX	12 " x 2-1/2 "	2146AT - 357	R46357	R40H547	R40H4087	R40H2598	R40H2599
1992									
	Ra	BX	12 " x 2-1/2 "	2146AT - 357	R46357	R40H547	R40H4087	R40H2598	R40H2599
	Ra	BX	11 " x 2-1/2 "	2025T - 446	R46446	R40H111	R40H7199	R40H2534	R40H2535
	Ra	BX	11 " x 2-1/2 "	2025T - 446	R46446	R40H111	R40H7199	R40H2534	R40H2535
	Ra	BX	12 " x 3 "	2140AT - 358	R46358	R40H547	R40H4087	R40H2598	R40H2599
Except 4500 lb.	Fd	KH		7179 - D269	MD269	NR	R40H5516	NR	NR
4,500 lb.	Fd	BX		7081 - D149	MD149	R40H5010	R40H5529	NR	NR
5,600, 5,800 lb.	Ra	BX	12 " x 2-1/2 "	2146AT - 357	R46357	R40H547	R40H4087	R40H2598	R40H2599
6200 lb.	Ra	BX	12 " x 2-1/2 "	2146AT - 357	R46357	R40H547	R40H4087	R40H2598	R40H2599
1991									
	Ra	BX	12 " x 2-1/2 "	2146AT - 357	R46357	R40H547	R40H4087	R40H2598	R40H2599
	Ra	BX	11 " x 2-1/2 "	2025T - 446	R46446	R40H111	R40H7199	R40H2534	R40H2535
	Ra	BX	11 " x 2-1/2 "	2025T - 446	R46446	R40H111	R40H7199	R40H2534	R40H2535
	Ra	BX	12 " x 3 "	2140AT - 358	R46358	R40H547	R40H4087	R40H2598	R40H2599
Except 4500 lb.	Fd	KH		7179 - D269	MD269	NR	R40H5516	NR	NR
4,500 lb.	Fd	BX		7081 - D149	MD149	R40H5010	R40H5529	NR	NR
5,600, 5,800 lb.	Ra	BX	12 " x 2-1/2 "	2146AT - 357	R46357	R40H547	R40H4087	R40H2598	R40H2599
6200 lb.	Ra	BX	12 " x 2-1/2 "	2146AT - 357	R46357	R40H547	R40H4087	R40H2598	R40H2599
1988									
	Ra	BX	12 " x 3 "	2140AT - 358	R46358	R40H547	R40H4087	R40H2598	R40H2599
	Ra	BX	12 " x 2-1/2 "	2146AT - 357	R46357	R40H547	R40H4087	R40H2598	R40H2599
	Ra	BX	12 " x 2-1/2 "	2146AT - 357	R46357	R40H547	R40H4087	R40H2598	R40H2599
	Ra	BX	12 " x 2-1/2 "	2146AT - 357	R46357	R40H547	R40H4087	R40H2598	R40H2599
Except 4500 lb.	Fd	CH		7019 - D123	MD269	NR	R40H5516	NR	NR
	Fd	CH		7019 - D123	MD269	NR	R40H5516	NR	NR
	Fd	KH		7179 - D269	MD269	NR	R40H5516	NR	NR
	Fd	KH		7179 - D269	MD269	NR	R40H5516	NR	NR
4,500 lb.	Fd	BX		7081 - D149	MD149	R40H5010	R40H5529	NR	NR
1987									
	Ra	BX	12 " x 3 "	2140AT - 358	R46358	R40H547	R40H4087	R40H2598	R40H2599
	Ra	BX	12 " x 2-1/2 "	2146AT - 357	R46357	R40H547	R40H4087	R40H2598	R40H2599
	Ra	BX	12 " x 2-1/2 "	2146AT - 357	R46357	R40H547	R40H4087	R40H2598	R40H2599
	Ra	BX	12 " x 2-1/2 "	2146AT - 357	R46357	R40H547	R40H4087	R40H2598	R40H2599
Except 4500 lb.	Fd	CH		7019 - D123	MD269	NR	R40H5516	NR	NR
	Fd	CH		7019 - D123	MD269	NR	R40H5516	NR	NR
	Fd	KH		7179 - D269	MD269	NR	R40H5516	NR	NR
	Fd	KH		7179 - D269	MD269	NR	R40H5516	NR	NR
4,500 lb.	Fd	BX		7081 - D149	MD149	R40H5010	R40H5529	NR	NR
1986									
	Ra	BX	12 " x 3 "	2140AT - 358	R46358	R40H547	R40H4087	R40H2598	R40H2599
	Ra	BX	12 " x 2-1/2 "	2146AT - 357	R46357	R40H547	R40H4087	R40H2598	R40H2599
	Ra	BX	12 " x 2-1/2 "	2146AT - 357	R46357	R40H547	R40H4087	R40H2598	R40H2599
	Ra	BX	12 " x 2-1/2 "	2146AT - 357	R46357	R40H547	R40H4087	R40H2598	R40H2599
Except 4500 lb.	Fd	CH		7019 - D123	MD269	NR	R40H5516	NR	NR
	Fd	CH		7019 - D123	MD269	NR	R40H5516	NR	NR
	Fd	KH		7179 - D269	MD269	NR	R40H5516	NR	NR
	Fd	KH		7179 - D269	MD269	NR	R40H5516	NR	NR
4,500 lb.	Fd	BX		7081 - D149	MD149	R40H5010	R40H5529	NR	NR

44 - R44141664 is rotor only, for hub only use E-8396

53 - Power Brakes

79 - Inboard Mounting

83 - 5" Bolt Circle

84 - 9 1/4" Ring Gear, Heavy Duty Axle

93 - Rotor Only with Hub Casting # 99756

128 - Bracket

137 - Tee

138 - Tee Hose Not Available

MERITOR DRUM OR ROTOR NO.	CALIPER OR CYLINDER BORE SIZE	MERITOR CALIPER OR WHEEL CYLINDER (LEFT)	MERITOR CALIPER OR WHEEL CYLINDER (RIGHT)	MERITOR CALIPER OR WHEEL CYLINDER REPAIR KIT	MERITOR CALIPER PISTON	MERITOR MASTER CYLINDER	MERITOR MASTER CYLINDER KIT	MERITOR BRAKE HOSE (LEFT)	MERITOR BRAKE HOSE (RIGHT)
									DODGE(Cont.)
									W200,W250, PW200, PW250 SERIES 4WD PICKUP-3/4 TON(Cont.)
R44141469[351]	3-3/8 "	R42R55200	R42R55199[346]	R4066780	R4090021	-	-	-	-
R44141397[93]	3-3/8 "	R42R55200	R42R55199[346]	R4066780	R4090021	R4111775[53]	R4122596	R4577171[137]	N/A
R44141469[351]	3-3/8 "	R42R55200	R42R55199[346]	R4066780	R4090021	R4111775[53]	R4122596	R4577387[128]	R4577388
R44141468[352]	3-3/8 "	R42R55200	R42R55199[346]	R4066780	R4090021	R4111775[53]	R4122596	R4577024[138]	R4577024
R44141469[351]	3-3/8 "	R42R55200	R42R55199[346]	R4066780	R4090021	R4111775[53]	R4122596	R4577171[137]	N/A
R44141469[351]	3-3/8 "	R42R55200	R42R55199[346]	R4066780	R4090021	R4111775[53]	R4122596	R4577921[137]	N/A
R44141414[405]	3-3/8 "	R42R55200	R42R55199[346]	R4066780	R4090021	R4111775[53]	R4122596	R4577024[138]	R4577024
R44141414[405]	3-3/8 "	R42R55200	R42R55199[346]	R4066780	R4090021	R4111775[53]	R4122596	R4577171[137]	N/A
R44141468[352]	3-3/8 "	R42R55200	R42R55199[346]	R4066780	R4090021	R4111775[53]	R4122596	R4577387[128]	R4577388
R44141414[405]	3-3/8 "	R42R55200	R42R55199[346]	R4066780	R4090021	R4111775[53]	R4122596	R4577387[128]	R4577388
R44141414[405]	3-3/8 "	R42R55200	R42R55199[346]	R4066780	R4090021	R4111775[53]	R4122596	R4577921[137]	N/A
R44141397[93]	3-3/8 "	R42R55200	R42R55199[346]	R4066780	R4090021	R4111775[53]	R4122596	R4577387[128]	R4577388
R44140267[79]	7/8 "	R4133627	R4133628	R4166820	NR	-	-	-	-
R44140264[333]	1 "	R4133005	R4133005	R4166822	NR	-	-	-	-
R44140547[84]	1 "	R4133005	R4133005	R4166822	NR	-	-	-	-
R441404090[83]	1 "	R4133005	R4133005	R4166822	NR	-	-	-	-
R441404090[83]	15/16 "	R4133597	R4133597	R4166852	NR	-	-	-	-
R44140267[79]		-	-	N/A	NR	-	-	-	-
R44141664[44]	3-3/32 "	R42R55119	R42R55118	R4066587	R4090018P	-	-	-	-
R44141469[351]	3-3/8 "	R42R55200	R42R55199[346]	R4066780	R4090021	-	-	-	-
R44140267[79]	7/8 "	R4133627	R4133628	R4166820	NR	-	-	-	-
R44140264[333]	15/16 "	R4133597	R4133597	R4166852	NR	-	-	-	-
R44140547[84]	1 "	R4133005	R4133005	R4166822	NR	-	-	-	-
R441404090[83]	1 "	R4133005	R4133005	R4166822	NR	-	-	-	-
R441404090[83]	15/16 "	R4133597	R4133597	R4166852	NR	-	-	-	-
R44140267[79]		-	-	N/A	NR	-	-	-	-
R44141664[44]	3-3/32 "	R42R55119	R42R55118	R4066587	R4090018P	-	-	-	-
R44141469[351]	3-3/8 "	R42R55200	R42R55199[346]	R4066780	R4090021	-	-	-	-
R44140267[79]	7/8 "	R4133627	R4133628	R4166820	NR	-	-	-	-
R44140264[333]	15/16 "	R4133597	R4133597	R4166852	NR	-	-	-	-
R44140264[333]	1-1/16 "	-	-	N/A	NR	-	-	-	-
R44140547[84]	1 "	R4133005	R4133005	R4166822	NR	-	-	-	-
R44140547[84]	7/8 "	R4133627	R4133628	R4166820	NR	-	-	-	-
R44140547[84]	1-1/8 "	R4133206	R4133207	R418187	NR	-	-	-	-
N/A	3-3/32 "	R42R55119	R42R55118	R4066587	R4090018P	-	-	-	-
R44141664[44]	3-3/32 "	R42R55119	R42R55118	R4066587	R4090018P	-	-	-	-
N/A	3-3/32 "	R42R55119	R42R55118	R4066587	R4090018P	-	-	-	-
R44141664[44]	3-3/32 "	R42R55119	R42R55118	R4066587	R4090018P	-	-	-	-
R44141397[93]	3-3/8 "	R42R55200	R42R55199[346]	R4066780	R4090021	-	-	-	-
R44140264[333]	1-1/16 "	-	-	N/A	NR	-	-	-	-
R44140547[84]	1 "	R4133005	R4133005	R4166822	NR	-	-	-	-
R44140547[84]	7/8 "	R4133627	R4133628	R4166820	NR	-	-	-	-
R44140547[84]	1-1/8 "	R4133206	R4133207	R418187	NR	-	-	-	-
R44141664[44]	3-3/32 "	R42R55119	R42R55118	R4066587	R4090018P	-	-	-	-
N/A	3-3/32 "	R42R55119	R42R55118	R4066587	R4090018P	-	-	-	-
N/A	3-3/32 "	R42R55119	R42R55118	R4066587	R4090018P	-	-	-	-
R44141664[44]	3-3/32 "	R42R55119	R42R55118	R4066587	R4090018P	-	-	-	-
R44141397[93]	3-3/8 "	R42R55200	R42R55199[346]	R4066780	R4090021	-	-	-	-
R44140264[333]	1-1/16 "	-	-	N/A	NR	-	-	-	-
R44140547[84]	7/8 "	R4133627	R4133628	R4166820	NR	-	-	-	-
R44140547[84]	1 "	R4133005	R4133005	R4166822	NR	-	-	-	-
R44140547[84]	1-1/8 "	R4133206	R4133207	R418187	NR	-	-	-	-
R44141664[44]	3-3/32 "	R42R55119	R42R55118	R4066587	R4090018P	-	-	-	-
N/A	3-3/32 "	R42R55119	R42R55118	R4066587	R4090018P	-	-	-	-
N/A	3-3/32 "	R42R55119	R42R55118	R4066587	R4090018P	-	-	-	-
R44141664[44]	3-3/32 "	R42R55119	R42R55118	R4066587	R4090018P	-	-	-	-
R44141397[93]	3-3/8 "	R42R55200	R42R55199[346]	R4066780	R4090021	-	-	-	-

333 - Except 9 1/4" Ring Gear

346 - 4500 lb. Casting Number 2238451452, 10mm Inlet

351 - 1/2" Studs, 4500 lb. Axle, Rotor Casting Number 100353, Hub Casting Number 102764

352 - 5/8" Studs, 4500 lb. Axle, Rotor Casting Number 100353, Hub Casting Number 102762

405 - Rotor Only

MAKE MODEL YEAR AXLE CODE AXLE WEIGHT	AXLE & BRK. TYPE	BRK. MFG.	BRAKE SIZE	FMSI	MERITOR DISC PAD OR BRAKE SHOE	MERITOR GUIDE PIN OR RETURN SPRING KIT	MERITOR CALIPER HWD. KIT OR RETURN SPRING KIT	MERITOR ADJUSTER KIT (LEFT WHEEL)	MERITOR ADJUSTER KIT (RIGHT WHEEL)
DODGE(Cont.)									
W200,W250, PW200, PW250 SERIES 4WD PICKUP-3/4 TON(Cont.)									
1985									
	Ra	BX	12 " x 3 "	2140AT - 358	R46358	R40H547	R40H4087	R40H2598	R40H2599
	Ra	BX	12 " x 2-1/2 "	2146AT - 357	R46357	R40H547	R40H4087	R40H2598	R40H2599
	Ra	BX	12 " x 2-1/2 "	2146AT - 357	R46357	R40H547	R40H4087	R40H2598	R40H2599
	Ra	BX	12 " x 2-1/2 "	2146AT - 357	R46357	R40H547	R40H4087	R40H2598	R40H2599
Except 4500 lb.	Fd	CH		7019 - D123	MD269	NR	R40H5516	NR	NR
	Fd	CH		7019 - D123	MD269	NR	R40H5516	NR	NR
	Fd	KH		7179 - D269	MD269	NR	R40H5516	NR	NR
	Fd	KH		7179 - D269	MD269	NR	R40H5516	NR	NR
4,500 lb.	Fd	BX		7081 - D149	MD149	R40H5010	R40H5529	NR	NR
1984									
	Ra	BX	12 " x 3 "	2140AT - 358	R46358	R40H547	R40H4087	R40H2598	R40H2599
	Ra	BX	12 " x 2-1/2 "	2146AT - 357	R46357	R40H547	R40H4087	R40H2598	R40H2599
	Ra	BX	12 " x 2-1/2 "	2146AT - 357	R46357	R40H547	R40H4087	R40H2598	R40H2599
	Ra	BX	12 " x 2-1/2 "	2146AT - 357	R46357	R40H547	R40H4087	R40H2598	R40H2599
Except 4500 lb.	Fd	CH		7019 - D123	MD269	NR	R40H5516	NR	NR
	Fd	CH		7019 - D123	MD269	NR	R40H5516	NR	NR
	Fd	KH		7179 - D269	MD269	NR	R40H5516	NR	NR
	Fd	KH		7179 - D269	MD269	NR	R40H5516	NR	NR
4,500 lb.	Fd	BX		7081 - D149	MD149	R40H5010	R40H5529	NR	NR
1983									
	Ra	BX	12 " x 3 "	2140AT - 358	R46358	R40H547	R40H4087	R40H2598	R40H2599
	Ra	BX	12 " x 2-1/2 "	2146AT - 357	R46357	R40H547	R40H4087	R40H2598	R40H2599
	Ra	BX	12 " x 2-1/2 "	2146AT - 357	R46357	R40H547	R40H4087	R40H2598	R40H2599
	Ra	BX	12 " x 2-1/2 "	2146AT - 357	R46357	R40H547	R40H4087	R40H2598	R40H2599
Except 4500 lb.	Fd	CH		7019 - D123	MD269	NR	R40H5516	NR	NR
	Fd	CH		7019 - D123	MD269	NR	R40H5516	NR	NR
	Fd	KH		7179 - D269	MD269	NR	R40H5516	NR	NR
	Fd	KH		7179 - D269	MD269	NR	R40H5516	NR	NR
4,500 lb.	Fd	BX		7081 - D149	MD149	R40H5010	R40H5529	NR	NR
1982									
	Ra	BX	12 " x 3 "	2140AT - 358	R46358	R40H547	R40H4087	R40H2598	R40H2599
	Ra	BX	12 " x 2-1/2 "	2146AT - 357	R46357	R40H547	R40H4087	R40H2598	R40H2599
	Ra	BX	12 " x 2-1/2 "	2146AT - 357	R46357	R40H547	R40H4087	R40H2598	R40H2599
	Ra	BX	12 " x 2-1/2 "	2146AT - 357	R46357	R40H547	R40H4087	R40H2598	R40H2599
Except 4500 lb.	Fd	CH		7019 - D123	MD269	NR	R40H5516	NR	NR
	Fd	CH		7019 - D123	MD269	NR	R40H5516	NR	NR
	Fd	KH		7179 - D269	MD269	NR	R40H5516	NR	NR
	Fd	KH		7179 - D269	MD269	NR	R40H5516	NR	NR
4,500 lb.	Fd	BX		7081 - D149	MD149	R40H5010	R40H5529	NR	NR
1981									
	Ra	BX	12 " x 2-1/2 "	2146AT - 357	R46357	R40H547	R40H4087	R40H2598	R40H2599
	Ra	BX	12 " x 2-1/2 "	2146AT - 357	R46357	R40H547	R40H4087	R40H2598	R40H2599
3,500 lb.	Fd	CH		7019 - D123	MD269	NR	R40H5516	NR	NR
	Fd	CH		7019 - D123	MD269	NR	R40H5516	NR	NR
4,500 lb.	Fd	BX		7081 - D149	MD149	R40H5010	R40H5529	NR	NR
1980									
	Ra	BX	12 " x 2-1/2 "	2146AT - 357	R46357	R40H547	R40H4087	R40H2598	R40H2599
	Ra	BX	12 " x 2-1/2 "	2146AT - 357	R46357	R40H547	R40H4087	R40H2598	R40H2599
3,500 lb.	Fd	CH		7019 - D123	MD269	NR	R40H5516	NR	NR
	Fd	CH		7019 - D123	MD269	NR	R40H5516	NR	NR
4,500 lb.	Fd	BX		7081 - D149	MD149	R40H5010	R40H5529	NR	NR
1979									
	Ra	BX	12 " x 2-1/2 "	2146AT - 357	R46357	R40H547	R40H4087	R40H2598	R40H2599
	Ra	BX	12 " x 2-1/2 "	2146AT - 357	R46357	R40H547	R40H4087	R40H2598	R40H2599
3,500 lb.	Fd	CH		7019 - D123	MD269	NR	R40H5516	NR	NR
	Fd	CH		7019 - D123	MD269	NR	R40H5516	NR	NR
4,500 lb.	Fd	BX		7081 - D149	MD149	R40H5010	R40H5529	NR	NR
1978									
	Ra	BX	12 " x 2-1/2 "	2146AT - 357	R46357	R40H547	R40H4087	R40H2598	R40H2599
	Ra	BX	12 " x 2-1/2 "	2146AT - 357	R46357	R40H547	R40H4087	R40H2598	R40H2599
3,500 lb.	Fd	CH		7019 - D123	MD269	NR	R40H5516	NR	NR
	Fd	CH		7019 - D123	MD269	NR	R40H5516	NR	NR
4,500 lb.	Fd	BX		7081 - D149	MD149	R40H5010	R40H5529	NR	NR
1977									
	Ra	BX	12 " x 2-1/2 "	2146AT - 357	R46357	R40H547	R40H4087	R40H2598	R40H2599

44 - R44141664 is rotor only, for hub only use E-8396
93 - Rotor Only with Hub Casting # 99756
79 - Inboard Mounting
333 - Except 9 1/4" Ring Gear
84 - 9 1/4" Ring Gear, Heavy Duty Axle
346 - 4500 lb. Casting Number 2238451452, 10mm Inlet

MERITOR DRUM OR ROTOR NO.	CALIPER OR CYLINDER BORE SIZE	MERITOR CALIPER OR WHEEL CYLINDER (LEFT)	MERITOR CALIPER OR WHEEL CYLINDER (RIGHT)	MERITOR CALIPER OR WHEEL CYLINDER REPAIR KIT	MERITOR CALIPER PISTON	MERITOR MASTER CYLINDER	MERITOR MASTER CYLINDER KIT	MERITOR BRAKE HOSE (LEFT)	MERITOR BRAKE HOSE (RIGHT)
									DODGE(Cont.)
									W200,W250, PW200, PW250 SERIES 4WD PICKUP-3/4 TON(Cont.)
R44140264[333]	1-1/16 "	-	-	N/A	NR	-	-	-	-
R44140547[84]	1 "	R4133005	R4133005	R4166822	NR	-	-	-	-
R44140547[84]	7/8 "	R4133627	R4133628	R4166820	NR	-	-	-	-
R44140547[84]	1-1/8 "	R4133206	R4133207	R418187	NR	-	-	-	-
N/A	3-3/32 "	R42R55119	R42R55118	R4066587	R4090018P	-	-	-	-
R44141664[44]	3-3/32 "	R42R55119	R42R55118	R4066587	R4090018P	-	-	-	-
R44141664[44]	3-3/32 "	R42R55119	R42R55118	R4066587	R4090018P	-	-	-	-
N/A	3-3/32 "	R42R55119	R42R55118	R4066587	R4090018P	-	-	-	-
R44141397[93]	3-3/8 "	R42R55200	R42R55199[346]	R4066780	R4090021	-	-	-	-
R44140264[333]	1-1/16 "	-	-	N/A	NR	-	-	-	-
R44140547[84]	1 "	R4133005	R4133005	R4166822	NR	-	-	-	-
R44140547[84]	7/8 "	R4133627	R4133628	R4166820	NR	-	-	-	-
R44140547[84]	1-1/8 "	R4133206	R4133207	R418187	NR	-	-	-	-
N/A	3-3/32 "	R42R55119	R42R55118	R4066587	R4090018P	-	-	-	-
R44141664[44]	3-3/32 "	R42R55119	R42R55118	R4066587	R4090018P	-	-	-	-
R44141664[44]	3-3/32 "	R42R55119	R42R55118	R4066587	R4090018P	-	-	-	-
N/A	3-3/32 "	R42R55119	R42R55118	R4066587	R4090018P	-	-	-	-
R44141397[93]	3-3/8 "	R42R55200	R42R55199[346]	R4066780	R4090021	-	-	-	-
R44140264[333]	1-1/16 "	-	-	N/A	NR	-	-	-	-
R44140547[84]	1 "	R4133005	R4133005	R4166822	NR	-	-	-	-
R44140547[84]	7/8 "	R4133627	R4133628	R4166820	NR	-	-	-	-
R44140547[84]	1-1/8 "	R4133206	R4133207	R418187	NR	-	-	-	-
R44141664[44]	3-3/32 "	R42R55119	R42R55118	R4066587	R4090018P	-	-	-	-
N/A	3-3/32 "	R42R55119	R42R55118	R4066587	R4090018P	-	-	-	-
N/A	3-3/32 "	R42R55119	R42R55118	R4066587	R4090018P	-	-	-	-
R44141664[44]	3-3/32 "	R42R55119	R42R55118	R4066587	R4090018P	-	-	-	-
R44141397[93]	3-3/8 "	R42R55200	R42R55199[346]	R4066780	R4090021	-	-	-	-
R44140264[333]	1-1/16 "	-	-	N/A	NR	-	-	-	-
R44140547[84]	7/8 "	R4133627	R4133628	R4166820	NR	-	-	-	-
R44140547[84]	1 "	R4133005	R4133005	R4166822	NR	-	-	-	-
R44140547[84]	1-1/8 "	R4133206	R4133207	R418187	NR	-	-	-	-
N/A	3-3/32 "	R42R55119	R42R55118	R4066587	R4090018P	-	-	-	-
R44141664[44]	3-3/32 "	R42R55119	R42R55118	R4066587	R4090018P	-	-	-	-
N/A	3-3/32 "	R42R55119	R42R55118	R4066587	R4090018P	-	-	-	-
R44141664[44]	3-3/32 "	R42R55119	R42R55118	R4066587	R4090018P	-	-	-	-
R44141397[93]	3-3/8 "	R42R55200	R42R55199[346]	R4066780	R4090021	-	-	-	-
R44140267[79]	1 "	R4133005	R4133005	R4166822	NR	-	-	-	-
R44140267[79]	7/8 "	R4133627	R4133628	R4166820	NR	-	-	-	-
N/A	3-3/32 "	R42R55119	R42R55118	R4066587	R4090018P	-	-	-	-
N/A	3-3/32 "	R42R55119	R42R55118	R4066587	R4090018P	-	-	-	-
N/A	3-3/8 "	R42R55200	R42R55199[346]	R4066780	R4090021	-	-	-	-
R44140267[79]	7/8 "	R4133627	R4133628	R4166820	NR	-	-	-	-
R44140267[79]	1 "	R4133005	R4133005	R4166822	NR	-	-	-	-
N/A	3-3/32 "	R42R55119	R42R55118	R4066587	R4090018P	-	-	-	-
N/A	3-3/32 "	R42R55119	R42R55118	R4066587	R4090018P	-	-	-	-
N/A	3-3/8 "	R42R55200	R42R55199[346]	R4066780	R4090021	-	-	-	-
R44140267[79]	1 "	R4133005	R4133005	R4166822	NR	-	-	-	-
R44140267[79]	7/8 "	R4133627	R4133628	R4166820	NR	-	-	-	-
N/A	3-3/32 "	R42R55119	R42R55118	R4066587	R4090018P	-	-	-	-
N/A	3-3/32 "	R42R55119	R42R55118	R4066587	R4090018P	-	-	-	-
N/A	3-3/8 "	R42R55200	R42R55199[346]	R4066780	R4090021	-	-	-	-
R44140267[79]	1 "	R4133005	R4133005	R4166822	NR	-	-	-	-
R44140267[79]	7/8 "	R4133627	R4133628	R4166820	NR	-	-	-	-
N/A	3-3/32 "	R42R55119	R42R55118	R4066587	R4090018P	-	-	-	-
N/A	3-3/32 "	R42R55119	R42R55118	R4066587	R4090018P	-	-	-	-
N/A	3-3/8 "	R42R55200	R42R55199[346]	R4066780	R4090021	-	-	-	-
R44140267[79]	1 "	R4133005	R4133004	R4166822	NR	-	-	-	-

MAKE MODEL YEAR AXLE CODE AXLE WEIGHT	AXLE & BRK. TYPE	BRK. MFG.	BRAKE SIZE	FMSI	MERITOR DISC PAD OR BRAKE SHOE	MERITOR GUIDE PIN OR RETURN SPRING KIT	MERITOR CALIPER HWD. KIT OR RETURN SPRING KIT	MERITOR ADJUSTER KIT (LEFT WHEEL)	MERITOR ADJUSTER KIT (RIGHT WHEEL)
DODGE(Cont.)									
W200,W250, PW200, PW250 SERIES 4WD PICKUP-3/4 TON(Cont.)									
1977									
	Ra	BX	12 " x 2-1/2 "	2146AT - 357	R46357	R40H547	R40H4087	R40H2598	R40H2599
3,500lb.	Fd	CH		7019 - D123	MD269	NR	R40H5516	NR	NR
	Fd	CH		7019 - D123	MD269	NR	R40H5516	NR	NR
4,500 lb.	Fd	BX		7081 - D149	MD149	R40H5010	R40H5529	NR	NR
1976									
	Ra	BX	12 " x 2-1/2 "	2146AT - 357	R46357	R40H547	R40H4087	R40H2598	R40H2599
	Ra	BX	12 " x 2-1/2 "	2146AT - 357	R46357	R40H547	R40H4087	R40H2598	R40H2599
3,500lb.	Fd	CH		7019 - D123	MD269	NR	R40H5516	NR	NR
	Fd	CH		7019 - D123	MD269	NR	R40H5516	NR	NR
4,500 lb.	Fd	BX		7081 - D149	MD149	R40H5010	R40H5529	NR	NR
1975									
	Ra	BX	12 " x 2-1/2 "	2146AT - 357	R46357	R40H547	R40H4087	R40H2598	R40H2599
	Ra	BX	12 " x 2-1/2 "	2146AT - 357	R46357	R40H547	R40H4087	R40H2598	R40H2599
3,500lb.	Fd	CH		7019 - D123	MD269	NR	R40H5516	NR	NR
	Fd	CH		7019 - D123	MD269	NR	R40H5516	NR	NR
4,500 lb.	Fd	BX		7081 - D149	MD149	R40H5010	R40H5529	NR	NR
1974									
	Fa	BX	12 " x 3 "	2140AT - 358	R46358	R40H546	R40H7181	R40H2598	R40H2599
	Fa	BX	12.125 x 2 "	2075A - 33	N/A	R40H130	-	NR	NR
	Ra	BX	12 " x 2-1/2 "	2146AT - 357	R46357	R40H547	R40H4087	R40H2598	R40H2599
1973									
	Fa	BX	12 " x 3 "	2140AT - 358	R46358	R40H547	R40H4087	R40H2598	R40H2599
	Fa	BX	12.125 x 2 "	2075A - 33	N/A	R40H130	-	NR	NR
	Ra	BX	12 " x 2-1/2 "	2146AT - 357	R46357	R40H547	R40H4087	R40H2598	R40H2599
1972									
	Fa	BX	12 " x 3 "	2140AT - 358	R46358	R40H547	R40H4087	R40H2598	R40H2599
	Fa	BX	12.125 x 2 "	2075A - 33	N/A	R40H130	-	NR	NR
	Ra	BX	12 " x 2-1/2 "	2146AT - 357	R46357	R40H547	R40H4087	R40H2598	R40H2599
W300, W350, PW300, PW350, W400, W450, PW400, PW450 SERIES 4WD PICKUP-1 TON									
1993									
	Fd	BX		7081 - D149	MD149	R40H5010	R40H5529	NR	NR
	Fd	BX		7081 - D149	MD149	R40H5010	R40H5529	NR	NR
	Fd	BX		7081 - D149	MD149	R40H5010	R40H5529	NR	NR
	Ra	BX	12 " x 3 "	2140AT - 358	R46358	R40H547	R40H4087	R40H2598	R40H2599
	Ra	BX	12 " x 3 "	2140AT - 358	R46358	R40H547	R40H4087	R40H2598	R40H2599
	Ra	BX	12 " x 3 "	2140AT - 358	R46358	R40H547	R40H4087	R40H2598	R40H2599
	Ra	BX	12 " x 2-1/2 "	2146AT - 357	R46357	R40H547	R40H4087	R40H2598	R40H2599
	Ra	BX	12 " x 2-1/2 "	2146AT - 357	R46357	R40H547	R40H4087	R40H2598	R40H2599
	Ra	BX	12 " x 2-1/2 "	2146AT - 357	R46357	R40H547	R40H4087	R40H2598	R40H2599
Dual Rear Wheels	Fd	BX		7081 - D149	MD149	R40H5010	R40H5529	NR	NR
Single Rear Wheels	Fd	BX		7081 - D149	MD149	R40H5010	R40H5529	NR	NR
	Fd	BX		7081 - D149	MD149	R40H5010	R40H5529	NR	NR
	Fd	BX		7081 - D149	MD149	R40H5010	R40H5529	NR	NR
1992									
	Ra	BX	12 " x 3 "	2140AT - 358	R46358	R40H547	R40H4087	R40H2598	R40H2599
	Ra	BX	12 " x 3 "	2140AT - 358	R46358	R40H547	R40H4087	R40H2598	R40H2599
	Ra	BX	12 " x 2-1/2 "	2146AT - 357	R46357	R40H547	R40H4087	R40H2598	R40H2599
	Ra	BX	12 " x 2-1/2 "	2146AT - 357	R46357	R40H547	R40H4087	R40H2598	R40H2599
	Ra	BX	12 " x 2-1/2 "	2146AT - 357	R46357	R40H547	R40H4087	R40H2598	R40H2599
Dual Rear Wheels	Fd	BX		7081 - D149	MD149	R40H5010	R40H5529	NR	NR
Single Rear Wheels	Fd	BX		7081 - D149	MD149	R40H5010	R40H5529	NR	NR
	Fd	BX		7081 - D149	MD149	R40H5010	R40H5529	NR	NR
	Fd	BX		7081 - D149	MD149	R40H5010	R40H5529	NR	NR
1991									
	Ra	BX	12 " x 3 "	2140AT - 358	R46358	R40H547	R40H4087	R40H2598	R40H2599
	Ra	BX	12 " x 3 "	2140AT - 358	R46358	R40H547	R40H4087	R40H2598	R40H2599
	Ra	BX	12 " x 2-1/2 "	2146AT - 357	R46357	R40H547	R40H4087	R40H2598	R40H2599
	Ra	BX	12 " x 2-1/2 "	2146AT - 357	R46357	R40H547	R40H4087	R40H2598	R40H2599
	Ra	BX	12 " x 2-1/2 "	2146AT - 357	R46357	R40H547	R40H4087	R40H2598	R40H2599
Dual Rear Wheels	Fd	BX		7081 - D149	MD149	R40H5010	R40H5529	NR	NR
Single Rear Wheels	Fd	BX		7081 - D149	MD149	R40H5010	R40H5529	NR	NR
	Fd	BX		7081 - D149	MD149	R40H5010	R40H5529	NR	NR
	Fd	BX		7081 - D149	MD149	R40H5010	R40H5529	NR	NR

53 - Power Brakes
84 - 9 1/4" Ring Gear, Heavy Duty Axle
137 - Tee

77 - Hub Casting # 102764
93 - Rotor Only with Hub Casting # 99756
333 - Except 9 1/4" Ring Gear

79 - Inboard Mounting
128 - Bracket
346 - 4500 lb. Casting Number 2238451452, 10mm Inlet

MERITOR DRUM OR ROTOR NO.	CALIPER OR CYLINDER BORE SIZE	MERITOR CALIPER OR WHEEL CYLINDER (LEFT)	MERITOR CALIPER OR WHEEL CYLINDER (RIGHT)	MERITOR CALIPER OR WHEEL CYLINDER REPAIR KIT	MERITOR CALIPER PISTON	MERITOR MASTER CYLINDER	MERITOR MASTER CYLINDER KIT	MERITOR BRAKE HOSE (LEFT)	MERITOR BRAKE HOSE (RIGHT)
									DODGE(Cont.)
									W200,W250, PW200, PW250 SERIES 4WD PICKUP-3/4 TON(Cont.)
R44140267[79]	7/8 "	R4133627	R4133628	R4166820	NR	-	-	-	-
-	3-3/32 "	R42R55119	R42R55118	R4066587	R4090018P	-	-	-	-
-	3-3/32 "	R42R55119	R42R55118	R4066587	R4090018P	-	-	-	-
-	3-3/8 "	R42R55098	R42R55099	R4066780	R4090021	-	-	-	-
R44140267[79]	1 "	R4133005	R4133004	R4166822	NR	-	-	-	-
R44140267[79]	7/8 "	R4133627	R4133628	R4166820	NR	-	-	-	-
-	3-3/32 "	R42R55119	R42R55118	R4066587	R4090018P	-	-	-	-
-	3-3/32 "	R42R55119	R42R55118	R4066587	R4090018P	-	-	-	-
-	3-3/8 "	R42R55098	R42R55099	R4066780	R4090021	-	-	-	-
R44140267[79]	1 "	R4133005	R4133004	R4166822	NR	-	-	-	-
R44140267[79]	7/8 "	R4133627	R4133628	R4166820	NR	-	-	-	-
-	3-3/32 "	R42R55119	R42R55118	R4066587	R4090018P	-	-	-	-
-	3-3/32 "	R42R55119	R42R55118	R4066587	R4090018P	-	-	-	-
-	3-3/8 "	R42R55098	R42R55099	R4066780	R4090021	-	-	-	-
R44140264[333]	1-1/8 "	R4133206	R4133207	R418187	NR	-	-	-	-
-	1-1/8 "	R4133206	R4133207	R418187	NR	-	-	-	-
R44140267[79]	1 "	R4133004	R4133005	R4166822	NR	-	-	-	-
-	1-1/8 "	R4133206	R4133207	R418187	NR	-	-	-	-
-	1-1/8 "	R4133206	R4133207	R418187	NR	-	-	-	-
R44140267[79]	1 "	R4133004	R4133005	R4166822	NR	-	-	-	-
-	1-1/8 "	R4133206	R4133207	R418187	NR	-	-	-	-
-	1-1/8 "	R4133206	R4133207	R418187	NR	-	-	-	-
R44140267[79]	1 "	R4133004	R4133005	R4166822	NR	-	-	-	-
									W300, W350, PW300, PW350, W400, W450, PW400, PW450 SERIES 4WD PICKUP-1 TON
N/A	3-3/8 "	R42R55200	R42R55199[346]	R4066780	R4090021	R4111775[53]	R4122596	R4577921[137]	N/A
N/A	3-3/8 "	R42R55200	R42R55199[346]	R4066780	R4090021	R4111775[53]	R4122596	R4577171[137]	N/A
N/A	3-3/8 "	R42R55200	R42R55199[346]	R4066780	R4090021	R4111775[53]	R4122596	R4577387[128]	R4577388
R44140264[333]	7/8 "	R4133627	R4133628	R4166820	NR	-	-	-	-
R44140264[333]	1-1/8 "	R4133206	R4133207	R418187	NR	-	-	-	-
R44140264[333]	1 "	R4133005	R4133005	R4166822	NR	-	-	-	-
R44140547[84]	1 "	R4133005	R4133005	R4166822	NR	-	-	-	-
R44140547[84]	7/8 "	R4133627	R4133628	R4166820	NR	-	-	-	-
R44140547[84]	1-1/8 "	R4133206	R4133207	R418187	NR	-	-	-	-
R44141397[93]	3-3/8 "	R42R55200	R42R55199[346]	R4066780	R4090021	-	-	-	-
R44141468[77]	3-3/8 "	R42R55200	R42R55199[346]	R4066780	R4090021	-	-	-	-
R44141397[93]	3-3/8 "	R42R55200	R42R55199[346]	R4066780	R4090021	-	-	-	-
R44141397[93]	3-3/8 "	R42R55200	R42R55199[346]	R4066780	R4090021	-	-	-	-
R44140264[333]	1 "	R4133005	R4133005	R4166822	NR	-	-	-	-
R44140264[333]	7/8 "	R4133627	R4133628	R4166820	NR	-	-	-	-
R44140547[84]	7/8 "	R4133627	R4133628	R4166820	NR	-	-	-	-
R44140547[84]	1-1/8 "	R4133206	R4133207	R418187	NR	-	-	-	-
R44140547[84]	1 "	R4133005	R4133005	R4166822	NR	-	-	-	-
R44141397[93]	3-3/8 "	R42R55200	R42R55199[346]	R4066780	R4090021	-	-	-	-
R44141397[93]	3-3/8 "	R42R55200	R42R55199[346]	R4066780	R4090021	-	-	-	-
R44141397[93]	3-3/8 "	R42R55200	R42R55199[346]	R4066780	R4090021	-	-	-	-
R44141468[77]	3-3/8 "	R42R55200	R42R55199[346]	R4066780	R4090021	-	-	-	-
R44140264[333]	1 "	R4133005	R4133005	R4166822	NR	-	-	-	-
R44140264[333]	7/8 "	R4133627	R4133628	R4166820	NR	-	-	-	-
R44140547[84]	7/8 "	R4133627	R4133628	R4166820	NR	-	-	-	-
R44140547[84]	1 "	R4133005	R4133005	R4166822	NR	-	-	-	-
R44140547[84]	1-1/8 "	R4133206	R4133207	R418187	NR	-	-	-	-
R44141397[93]	3-3/8 "	R42R55200	R42R55199[346]	R4066780	R4090021	-	-	-	-
R44141397[93]	3-3/8 "	R42R55200	R42R55199[346]	R4066780	R4090021	-	-	-	-
R44141468[77]	3-3/8 "	R42R55200	R42R55199[346]	R4066780	R4090021	-	-	-	-
R44141397[93]	3-3/8 "	R42R55200	R42R55199[346]	R4066780	R4090021	-	-	-	-

MAKE MODEL YEAR AXLE CODE AXLE WEIGHT	AXLE & BRK. TYPE	BRK. MFG.	BRAKE SIZE	FMSI	MERITOR DISC PAD OR BRAKE SHOE	MERITOR GUIDE PIN OR RETURN SPRING KIT	MERITOR CALIPER HWD. KIT OR RETURN SPRING KIT	MERITOR ADJUSTER KIT (LEFT WHEEL)	MERITOR ADJUSTER KIT (RIGHT WHEEL)
DODGE(Cont.)									
W300, W350, PW300, PW350, W400, W450, PW400, PW450 SERIES 4WD PICKUP-1 TON(Cont.)									
1990									
	Ra	BX	12 " x 3 "	2140AT - 358	R46358	R40H547	R40H4087	R40H2598	R40H2599
	Ra	BX	12 " x 3 "	2140AT - 358	R46358	R40H547	R40H4087	R40H2598	R40H2599
	Ra	BX	12 " x 3 "	2140AT - 358	R46358	R40H547	R40H4087	R40H2598	R40H2599
	Ra	BX	12 " x 2-1/2 "	2146AT - 357	R46357	R40H547	R40H4087	R40H2598	R40H2599
	Ra	BX	12 " x 2-1/2 "	2146AT - 357	R46357	R40H547	R40H4087	R40H2598	R40H2599
	Ra	BX	12 " x 2-1/2 "	2146AT - 357	R46357	R40H547	R40H4087	R40H2598	R40H2599
Dual Rear Wheels	Fd	BX		7081 - D149	MD149	R40H5010	R40H5529	NR	NR
	Fd	BX		7081 - D149	MD149	R40H5010	R40H5529	NR	NR
	Fd	BX		7081 - D149	MD149	R40H5010	R40H5529	NR	NR
Single Rear Wheels	Fd	BX		7081 - D149	MD149	R40H5010	R40H5529	NR	NR
	Fd	BX		7081 - D149	MD149	R40H5010	R40H5529	NR	NR
1989									
	Ra	BX	12 " x 2-1/2 "	2146AT - 357	R46357	R40H547	R40H4087	R40H2598	R40H2599
	Ra	BX	12 " x 3 "	2140AT - 358	R46358	R40H547	R40H4087	R40H2598	R40H2599
	Ra	BX	12 " x 3 "	2140AT - 358	R46358	R40H547	R40H4087	R40H2598	R40H2599
	Ra	BX	12 " x 3 "	2140AT - 358	R46358	R40H547	R40H4087	R40H2598	R40H2599
	Ra	BX	12 " x 3 "	2140AT - 358	R46358	R40H547	R40H4087	R40H2598	R40H2599
	Ra	BX	12 " x 2-1/2 "	2146AT - 357	R46357	R40H547	R40H4087	R40H2598	R40H2599
	Ra	BX	12 " x 2-1/2 "	2146AT - 357	R46357	R40H547	R40H4087	R40H2598	R40H2599
	Ra	BX	12 " x 2-1/2 "	2146AT - 357	R46357	R40H547	R40H4087	R40H2598	R40H2599
Except 4500 lb.	Fd	CH		7019 - D123	MD269	NR	R40H5516	NR	NR
	Fd	KH		7179 - D269	MD269	NR	R40H5516	NR	NR
4,500 lb.	Fd	BX		7081 - D149	MD149	R40H5010	R40H5529	NR	NR
1988									
	Ra	BX	12 " x 2-1/2 "	2146AT - 357	R46357	R40H547	R40H4087	R40H2598	R40H2599
	Ra	BX	12 " x 3 "	2140AT - 358	R46358	R40H547	R40H4087	R40H2598	R40H2599
	Ra	BX	12 " x 3 "	2140AT - 358	R46358	R40H547	R40H4087	R40H2598	R40H2599
	Ra	BX	12 " x 3 "	2140AT - 358	R46358	R40H547	R40H4087	R40H2598	R40H2599
	Ra	BX	12 " x 3 "	2140AT - 358	R46358	R40H547	R40H4087	R40H2598	R40H2599
	Ra	BX	12 " x 2-1/2 "	2146AT - 357	R46357	R40H547	R40H4087	R40H2598	R40H2599
	Ra	BX	12 " x 2-1/2 "	2146AT - 357	R46357	R40H547	R40H4087	R40H2598	R40H2599
	Ra	BX	12 " x 2-1/2 "	2146AT - 357	R46357	R40H547	R40H4087	R40H2598	R40H2599
Except 4500 lb.	Fd	CH		7019 - D123	MD269	NR	R40H5516	NR	NR
	Fd	KH		7179 - D269	MD269	NR	R40H5516	NR	NR
4,500 lb.	Fd	BX		7081 - D149	MD149	R40H5010	R40H5529	NR	NR
1987									
	Ra	BX	12 " x 3 "	2140AT - 358	R46358	R40H547	R40H4087	R40H2598	R40H2599
	Ra	BX	12 " x 3 "	2140AT - 358	R46358	R40H547	R40H4087	R40H2598	R40H2599
	Ra	BX	12 " x 3 "	2140AT - 358	R46358	R40H547	R40H4087	R40H2598	R40H2599
	Ra	BX	12 " x 2-1/2 "	2146AT - 357	R46357	R40H547	R40H4087	R40H2598	R40H2599
	Ra	BX	12 " x 2-1/2 "	2146AT - 357	R46357	R40H547	R40H4087	R40H2598	R40H2599
	Ra	BX	12 " x 2-1/2 "	2146AT - 357	R46357	R40H547	R40H4087	R40H2598	R40H2599
Optional	Ra	BX	12 " x 2-1/2 "	2146AT - 357	R46357	R40H547	R40H4087	R40H2598	R40H2599
	Ra	BX	12 " x 3 "	2140AT - 358	R46358	R40H547	R40H4087	R40H2598	R40H2599
Except 4500 lb.	Fd	CH		7019 - D123	MD269	NR	R40H5516	NR	NR
	Fd	KH		7179 - D269	MD269	NR	R40H5516	NR	NR
4,500 lb.	Fd	BX		7081 - D149	MD149	R40H5010	R40H5529	NR	NR
1986									
	Ra	BX	12 " x 3 "	2140AT - 358	R46358	R40H547	R40H4087	R40H2598	R40H2599
	Ra	BX	12 " x 3 "	2140AT - 358	R46358	R40H547	R40H4087	R40H2598	R40H2599
	Ra	BX	12 " x 3 "	2140AT - 358	R46358	R40H547	R40H4087	R40H2598	R40H2599
	Ra	BX	12 " x 2-1/2 "	2146AT - 357	R46357	R40H547	R40H4087	R40H2598	R40H2599
	Ra	BX	12 " x 2-1/2 "	2146AT - 357	R46357	R40H547	R40H4087	R40H2598	R40H2599
	Ra	BX	12 " x 2-1/2 "	2146AT - 357	R46357	R40H547	R40H4087	R40H2598	R40H2599
Optional	Ra	BX	12 " x 2-1/2 "	2146AT - 357	R46357	R40H547	R40H4087	R40H2598	R40H2599
	Ra	BX	12 " x 3 "	2140AT - 358	R46358	R40H547	R40H4087	R40H2598	R40H2599
Except 4500 lb.	Fd	CH		7019 - D123	MD269	NR	R40H5516	NR	NR
	Fd	KH		7179 - D269	MD269	NR	R40H5516	NR	NR
4,500 lb.	Fd	BX		7081 - D149	MD149	R40H5010	R40H5529	NR	NR
1985									
	Ra	BX	12 " x 3 "	2140AT - 358	R46358	R40H547	R40H4087	R40H2598	R40H2599
	Ra	BX	12 " x 3 "	2140AT - 358	R46358	R40H547	R40H4087	R40H2598	R40H2599
	Ra	BX	12 " x 3 "	2140AT - 358	R46358	R40H547	R40H4087	R40H2598	R40H2599
	Ra	BX	12 " x 2-1/2 "	2146AT - 357	R46357	R40H547	R40H4087	R40H2598	R40H2599

44 - R44141664 is rotor only, for hub only use E-8396
93 - Rotor Only with Hub Casting # 99756
405 - Rotor Only
77 - Hub Casting # 102764
333 - Except 9 1/4" Ring Gear
84 - 9 1/4" Ring Gear, Heavy Duty Axle
346 - 4500 lb. Casting Number 2238451452, 10mm Inlet

MERITOR DRUM OR ROTOR NO.	CALIPER OR CYLINDER BORE SIZE	MERITOR CALIPER OR WHEEL CYLINDER (LEFT)	MERITOR CALIPER OR WHEEL CYLINDER (RIGHT)	MERITOR CALIPER OR WHEEL CYLINDER REPAIR KIT	MERITOR CALIPER PISTON	MERITOR MASTER CYLINDER	MERITOR MASTER CYLINDER KIT	MERITOR BRAKE HOSE (LEFT)	MERITOR BRAKE HOSE (RIGHT)
									DODGE(Cont.)
W300, W350, PW300, PW350, W400, W450, PW400, PW450 SERIES 4WD PICKUP-1 TON(Cont.)									
R44140264[333]	7/8 "	R4133627	R4133628	R4166820	NR	-	-	-	-
R44140264[333]	1 "	R4133005	R4133005	R4166822	NR	-	-	-	-
R44140264[333]	1-1/8 "	R4133206	R4133207	R418187	NR	-	-	-	-
R44140547[84]	1 "	R4133005	R4133005	R4166822	NR	-	-	-	-
R44140547[84]	7/8 "	R4133627	R4133628	R4166820	NR	-	-	-	-
R44140547[84]	1-1/8 "	R4133206	R4133207	R418187	NR	-	-	-	-
R44141468[77]	3-3/8 "	R42R55200	R42R55199[346]	R4066780	R4090021	-	-	-	-
R44141397[93]	3-3/8 "	R42R55200	R42R55199[346]	R4066780	R4090021	-	-	-	-
R44141468[77]	3-3/8 "	R42R55200	R42R55199[346]	R4066780	R4090021	-	-	-	-
R44141397[93]	3-3/8 "	R42R55200	R42R55199[346]	R4066780	R4090021	-	-	-	-
R44141397[93]	3-3/8 "	R42R55200	R42R55199[346]	R4066780	R4090021	-	-	-	-
R44140547[84]	1-1/16 "	R4133792	R 418162	R4166821	NR	-	-	-	-
R44140264[333]	1-1/8 "	R4133206	R4133207	R418187	NR	-	-	-	-
R44140264[333]	1 "	R4133005	R4133005	R4166822	NR	-	-	-	-
R44140264[333]	1-1/16 "	R4133792	R 418162	R4166821	NR	-	-	-	-
R44140264[333]	7/8 "	R4133627	R4133628	R4166820	NR	-	-	-	-
R44140547[84]	1 "	R4133005	R4133005	R4166822	NR	-	-	-	-
R44140547[84]	7/8 "	R4133627	R4133628	R4166820	NR	-	-	-	-
R44140547[84]	1-1/8 "	R4133206	R4133207	R418187	NR	-	-	-	-
R44141664[44]	3-3/32 "	R42R55119	R42R55118	R4066587	R4090018P	-	-	-	-
R44141664[44]	3-3/32 "	R42R55119	R42R55118	R4066587	R4090018P	-	-	-	-
R44141414[405]	3-3/8 "	R42R55200	R42R55199[346]	R4066780	R4090021	-	-	-	-
R44140547[84]	1-1/16 "	R4133792	R 418162	R4166821	NR	-	-	-	-
R44140264[333]	1-1/16 "	R4133792	R 418162	R4166821	NR	-	-	-	-
R44140264[333]	7/8 "	R4133627	R4133628	R4166820	NR	-	-	-	-
R44140264[333]	1 "	R4133005	R4133005	R4166822	NR	-	-	-	-
R44140264[333]	1-1/8 "	R4133206	R4133207	R418187	NR	-	-	-	-
R44140547[84]	1 "	R4133005	R4133005	R4166822	NR	-	-	-	-
R44140547[84]	7/8 "	R4133627	R4133628	R4166820	NR	-	-	-	-
R44140547[84]	1-1/8 "	R4133206	R4133207	R418187	NR	-	-	-	-
R44141664[44]	3-3/32 "	R42R55119	R42R55118	R4066587	R4090018P	-	-	-	-
R44141664[44]	3-3/32 "	R42R55119	R42R55118	R4066587	R4090018P	-	-	-	-
R44141414[405]	3-3/8 "	R42R55200	R42R55199[346]	R4066780	R4090021	-	-	-	-
R44140264[333]	1 "	R4133005	R4133005	R4166822	NR	-	-	-	-
R44140264[333]	1-1/8 "	R4133206	R4133207	R418187	NR	-	-	-	-
R44140264[333]	7/8 "	R4133627	R4133628	R4166820	NR	-	-	-	-
R44140547[84]	1-1/8 "	R4133206	R4133207	R418187	NR	-	-	-	-
R44140547[84]	7/8 "	R4133627	R4133628	R4166820	NR	-	-	-	-
R44140547[84]	1 "	R4133005	R4133005	R4166822	NR	-	-	-	-
R44140547[84]	1-1/16 "	R4133792	R 418162	R4166821	NR	-	-	-	-
R44140264[333]	1-1/16 "	R4133792	R 418162	R4166821	NR	-	-	-	-
R44141664[44]	3-3/32 "	R42R55119	R42R55118	R4066587	R4090018P	-	-	-	-
R44141664[44]	3-3/32 "	R42R55119	R42R55118	R4066587	R4090018P	-	-	-	-
R44141414[405]	3-3/8 "	R42R55200	R42R55199[346]	R4066780	R4090021	-	-	-	-
R44140264[333]	7/8 "	R4133627	R4133628	R4166820	NR	-	-	-	-
R44140264[333]	1-1/8 "	R4133206	R4133207	R418187	NR	-	-	-	-
R44140264[333]	1 "	R4133005	R4133005	R4166822	NR	-	-	-	-
R44140547[84]	1 "	R4133005	R4133005	R4166822	NR	-	-	-	-

MAKE MODEL YEAR AXLE CODE AXLE WEIGHT	AXLE & BRK. TYPE	BRK. MFG.	BRAKE SIZE	FMSI	MERITOR DISC PAD OR BRAKE SHOE	MERITOR GUIDE PIN OR RETURN SPRING KIT	MERITOR CALIPER HWD. KIT OR RETURN SPRING KIT	MERITOR ADJUSTER KIT (LEFT WHEEL)	MERITOR ADJUSTER KIT (RIGHT WHEEL)
DODGE(Cont.)									
W300, W350, PW300, PW350, W400, W450, PW400, PW450 SERIES 4WD PICKUP-1 TON(Cont.)									
1985									
	Ra	BX	12 " x 2-1/2 "	2146AT - 357	R46357	R40H547	R40H4087	R40H2598	R40H2599
	Ra	BX	12 " x 2-1/2 "	2146AT - 357	R46357	R40H547	R40H4087	R40H2598	R40H2599
Optional	Ra	BX	12 " x 2-1/2 "	2146AT - 357	R46357	R40H547	R40H4087	R40H2598	R40H2599
	Ra	BX	12 " x 3 "	2140AT - 358	R46358	R40H547	R40H4087	R40H2598	R40H2599
Except 4500 lb.	Fd	CH		7019 - D123	MD269	NR	R40H5516	NR	NR
	Fd	KH		7179 - D269	MD269	NR	R40H5516	NR	NR
4,500 lb.	Fd	BX		7081 - D149	MD149	R40H5010	R40H5529	NR	NR
1984									
	Ra	BX	12 " x 3 "	2140AT - 358	R46358	R40H547	R40H4087	R40H2598	R40H2599
	Ra	BX	12 " x 3 "	2140AT - 358	R46358	R40H547	R40H4087	R40H2598	R40H2599
	Ra	BX	12 " x 3 "	2140AT - 358	R46358	R40H547	R40H4087	R40H2598	R40H2599
	Ra	BX	12 " x 2-1/2 "	2146AT - 357	R46357	R40H547	R40H4087	R40H2598	R40H2599
	Ra	BX	12 " x 2-1/2 "	2146AT - 357	R46357	R40H547	R40H4087	R40H2598	R40H2599
	Ra	BX	12 " x 2-1/2 "	2146AT - 357	R46357	R40H547	R40H4087	R40H2598	R40H2599
Optional	Ra	BX	12 " x 2-1/2 "	2146AT - 357	R46357	R40H547	R40H4087	R40H2598	R40H2599
	Ra	BX	12 " x 3 "	2140AT - 358	R46358	R40H547	R40H4087	R40H2598	R40H2599
Except 4500 lb.	Fd	CH		7019 - D123	MD269	NR	R40H5516	NR	NR
	Fd	KH		7179 - D269	MD269	NR	R40H5516	NR	NR
4,500 lb.	Fd	BX		7081 - D149	MD149	R40H5010	R40H5529	NR	NR
1983									
	Ra	BX	12 " x 3 "	2140AT - 358	R46358	R40H547	R40H4087	R40H2598	R40H2599
	Ra	BX	12 " x 3 "	2140AT - 358	R46358	R40H547	R40H4087	R40H2598	R40H2599
	Ra	BX	12 " x 3 "	2140AT - 358	R46358	R40H547	R40H4087	R40H2598	R40H2599
	Ra	BX	12 " x 2-1/2 "	2146AT - 357	R46357	R40H547	R40H4087	R40H2598	R40H2599
	Ra	BX	12 " x 2-1/2 "	2146AT - 357	R46357	R40H547	R40H4087	R40H2598	R40H2599
	Ra	BX	12 " x 2-1/2 "	2146AT - 357	R46357	R40H547	R40H4087	R40H2598	R40H2599
Optional	Ra	BX	12 " x 2-1/2 "	2146AT - 357	R46357	R40H547	R40H4087	R40H2598	R40H2599
	Ra	BX	12 " x 3 "	2140AT - 358	R46358	R40H547	R40H4087	R40H2598	R40H2599
Except 4500 lb.	Fd	CH		7019 - D123	MD269	NR	R40H5516	NR	NR
	Fd	KH		7179 - D269	MD269	NR	R40H5516	NR	NR
4,500 lb.	Fd	BX		7081 - D149	MD149	R40H5010	R40H5529	NR	NR
1982									
	Ra	BX	12 " x 3 "	2140AT - 358	R46358	R40H547	R40H4087	R40H2598	R40H2599
	Ra	BX	12 " x 3 "	2140AT - 358	R46358	R40H547	R40H4087	R40H2598	R40H2599
	Ra	BX	12 " x 3 "	2140AT - 358	R46358	R40H547	R40H4087	R40H2598	R40H2599
	Ra	BX	12 " x 2-1/2 "	2146AT - 357	R46357	R40H547	R40H4087	R40H2598	R40H2599
	Ra	BX	12 " x 2-1/2 "	2146AT - 357	R46357	R40H547	R40H4087	R40H2598	R40H2599
	Ra	BX	12 " x 2-1/2 "	2146AT - 357	R46357	R40H547	R40H4087	R40H2598	R40H2599
Optional	Ra	BX	12 " x 2-1/2 "	2146AT - 357	R46357	R40H547	R40H4087	R40H2598	R40H2599
	Ra	BX	12 " x 3 "	2140AT - 358	R46358	R40H547	R40H4087	R40H2598	R40H2599
Except 4500 lb.	Fd	CH		7019 - D123	MD269	NR	R40H5516	NR	NR
	Fd	KH		7179 - D269	MD269	NR	R40H5516	NR	NR
4,500 lb.	Fd	BX		7081 - D149	MD149	R40H5010	R40H5529	NR	NR
1981									
	Ra	BX	12 " x 3 "	2140AT - 358	R46358	R40H547	R40H4087	R40H2598	R40H2599
	Ra	BX	12 " x 3 "	2140AT - 358	R46358	R40H547	R40H4087	R40H2598	R40H2599
Dual Rear Wheels	Fd	BX		7081 - D149	MD149	R40H5010	R40H5529	NR	NR
Single Rear Wheels	Fd	BX		7081 - D149	MD149	R40H5010	R40H5529	NR	NR
1980									
	Ra	BX	12 " x 3 "	2140AT - 358	R46358	R40H547	R40H4087	R40H2598	R40H2599
	Ra	BX	12 " x 3 "	2140AT - 358	R46358	R40H547	R40H4087	R40H2598	R40H2599
Dual Rear Wheels	Fd	BX		7081 - D149	MD149	R40H5010	R40H5529	NR	NR
Single Rear Wheels	Fd	BX		7081 - D149	MD149	R40H5010	R40H5529	NR	NR
1979									
	Ra	BX	12 " x 3 "	2140AT - 358	R46358	R40H547	R40H4087	R40H2598	R40H2599
	Ra	BX	12 " x 3 "	2140AT - 358	R46358	R40H547	R40H4087	R40H2598	R40H2599
Dual Rear Wheels	Fd	BX		7081 - D149	MD149	R40H5010	R40H5529	NR	NR
Single Rear Wheels	Fd	BX		7081 - D149	MD149	R40H5010	R40H5529	NR	NR
1978									
	Ra	BX	12 " x 3 "	2140AT - 358	R46358	R40H547	R40H4087	R40H2598	R40H2599
	Ra	BX	12 " x 3 "	2140AT - 358	R46358	R40H547	R40H4087	R40H2598	R40H2599
Dual Rear Wheels	Fd	BX		7081 - D149	MD149	R40H5010	R40H5529	NR	NR
Single Rear Wheels	Fd	BX		7081 - D149	MD149	R40H5010	R40H5529	NR	NR

44 - R44141664 is rotor only, for hub only use E-8396
333 - Except 9 1/4" Ring Gear
84 - 9 1/4" Ring Gear, Heavy Duty Axle
346 - 4500 lb. Casting Number 2238451452, 10mm Inlet
93 - Rotor Only with Hub Casting # 99756
405 - Rotor Only

MERITOR DRUM OR ROTOR NO.	CALIPER OR CYLINDER BORE SIZE	MERITOR CALIPER OR WHEEL CYLINDER (LEFT)	MERITOR CALIPER OR WHEEL CYLINDER (RIGHT)	MERITOR CALIPER OR WHEEL CYLINDER REPAIR KIT	MERITOR CALIPER PISTON	MERITOR MASTER CYLINDER	MERITOR MASTER CYLINDER KIT	MERITOR BRAKE HOSE (LEFT)	MERITOR BRAKE HOSE (RIGHT)
									DODGE(Cont.)
W300, W350, PW300, PW350, W400, W450, PW400, PW450 SERIES 4WD PICKUP-1 TON(Cont.)									
R44140547[84]	1-1/8 "	R4133206	R4133207	R418187	NR	-	-	-	-
R44140547[84]	7/8 "	R4133627	R4133628	R4166820	NR	-	-	-	-
R44140547[84]	1-1/16 "	R4133792	R 418162	R4166821	NR	-	-	-	-
R44140264[333]	1-1/16 "	R4133792	R 418162	R4166821	NR	-	-	-	-
R44141664[44]	3-3/32 "	R42R55119	R42R55118	R4066587	R4090018P	-	-	-	-
R44141664[44]	3-3/32 "	R42R55119	R42R55118	R4066587	R4090018P	-	-	-	-
R44141414[405]	3-3/8 "	R42R55200	R42R55199[346]	R4066780	R4090021	-	-	-	-
R44140264[333]	1-1/8 "	R4133206	R4133207	R418187	NR	-	-	-	-
R44140264[333]	7/8 "	R4133627	R4133628	R4166820	NR	-	-	-	-
R44140264[333]	1 "	R4133005	R4133005	R4166822	NR	-	-	-	-
R44140547[84]	1-1/8 "	R4133206	R4133207	R418187	NR	-	-	-	-
R44140547[84]	1 "	R4133005	R4133005	R4166822	NR	-	-	-	-
R44140547[84]	7/8 "	R4133627	R4133628	R4166820	NR	-	-	-	-
R44140547[84]	1-1/16 "	R4133792	R 418162	R4166821	NR	-	-	-	-
R44140264[333]	1-1/16 "	R4133792	R 418162	R4166821	NR	-	-	-	-
R44141664[44]	3-3/32 "	R42R55119	R42R55118	R4066587	R4090018P	-	-	-	-
R44141664[44]	3-3/32 "	R42R55119	R42R55118	R4066587	R4090018P	-	-	-	-
R44141414[405]	3-3/8 "	R42R55200	R42R55199[346]	R4066780	R4090021	-	-	-	-
R44140264[333]	1 "	R4133005	R4133005	R4166822	NR	-	-	-	-
R44140264[333]	7/8 "	R4133627	R4133628	R4166820	NR	-	-	-	-
R44140264[333]	1-1/8 "	R4133206	R4133207	R418187	NR	-	-	-	-
R44140547[84]	1 "	R4133005	R4133005	R4166822	NR	-	-	-	-
R44140547[84]	7/8 "	R4133627	R4133628	R4166820	NR	-	-	-	-
R44140547[84]	1-1/8 "	R4133206	R4133207	R418187	NR	-	-	-	-
R44140547[84]	1-1/16 "	R4133792	R 418162	R4166821	NR	-	-	-	-
R44140264[333]	1-1/16 "	R4133792	R 418162	R4166821	NR	-	-	-	-
R44141664[44]	3-3/32 "	R42R55119	R42R55118	R4066587	R4090018P	-	-	-	-
R44141664[44]	3-3/32 "	R42R55119	R42R55118	R4066587	R4090018P	-	-	-	-
R44141414[405]	3-3/8 "	R42R55200	R42R55199[346]	R4066780	R4090021	-	-	-	-
R44140264[333]	1-1/8 "	R4133206	R4133207	R418187	NR	-	-	-	-
R44140264[333]	1 "	R4133005	R4133005	R4166822	NR	-	-	-	-
R44140264[333]	7/8 "	R4133627	R4133628	R4166820	NR	-	-	-	-
R44140547[84]	1-1/8 "	R4133206	R4133207	R418187	NR	-	-	-	-
R44140547[84]	1 "	R4133005	R4133005	R4166822	NR	-	-	-	-
R44140547[84]	7/8 "	R4133627	R4133628	R4166820	NR	-	-	-	-
R44140547[84]	1-1/16 "	R4133792	R 418162	R4166821	NR	-	-	-	-
R44140264[333]	1-1/16 "	R4133792	R 418162	R4166821	NR	-	-	-	-
R44141664[44]	3-3/32 "	R42R55119	R42R55118	R4066587	R4090018P	-	-	-	-
R44141664[44]	3-3/32 "	R42R55119	R42R55118	R4066587	R4090018P	-	-	-	-
R44141414[405]	3-3/8 "	R42R55200	R42R55199[346]	R4066780	R4090021	-	-	-	-
R44140264[333]	1-1/16 "	R4133791	R 418145	R4166821	NR	-	-	-	-
R44140264[333]	1 "	R4133005	R4133005	R4166822	NR	-	-	-	-
R44141414[405]	3-3/8 "	R42R55200	R42R55199[346]	R4066780	R4090021	-	-	-	-
R44141397[93]	3-3/8 "	R42R55200	R42R55199[346]	R4066780	R4090021	-	-	-	-
R44140264[333]	1-1/16 "	R4133791	R 418145	R4166821	NR	-	-	-	-
R44140264[333]	1 "	R4133005	R4133005	R4166822	NR	-	-	-	-
R44141414[405]	3-3/8 "	R42R55200	R42R55199[346]	R4066780	R4090021	-	-	-	-
R44141397[93]	3-3/8 "	R42R55200	R42R55199[346]	R4066780	R4090021	-	-	-	-
R44140264[333]	1-1/16 "	R4133791	R 418145	R4166821	NR	-	-	-	-
R44140264[333]	1 "	R4133005	R4133005	R4166822	NR	-	-	-	-
R44141414[405]	3-3/8 "	R42R55200	R42R55199[346]	R4066780	R4090021	-	-	-	-
R44141397[93]	3-3/8 "	R42R55200	R42R55199[346]	R4066780	R4090021	-	-	-	-
R44140264[333]	1-1/16 "	R4133791	R 418145	R4166821	NR	-	-	-	-
R44140264[333]	1 "	R4133005	R4133005	R4166822	NR	-	-	-	-
R44141414[405]	3-3/8 "	R42R55200	R42R55199[346]	R4066780	R4090021	-	-	-	-
R44141397[93]	3-3/8 "	R42R55200	R42R55199[346]	R4066780	R4090021	-	-	-	-

MAKE MODEL YEAR AXLE CODE AXLE WEIGHT	AXLE & BRK. TYPE	BRK. MFG.	BRAKE SIZE	FMSI	MERITOR DISC PAD OR BRAKE SHOE	MERITOR GUIDE PIN OR RETURN SPRING KIT	MERITOR CALIPER HWD. KIT OR RETURN SPRING KIT	MERITOR ADJUSTER KIT (LEFT WHEEL)	MERITOR ADJUSTER KIT (RIGHT WHEEL)
DODGE(Cont.)									
W300, W350, PW300, PW350, W400, W450, PW400, PW450 SERIES 4WD PICKUP-1 TON(Cont.)									
1977									
	Ra	BX	12 " x 3 "	2140AT - 358	R46358	R40H547	R40H4087	R40H2598	R40H2599
	Ra	BX	12 " x 3 "	2140AT - 358	R46358	R40H547	R40H4087	R40H2598	R40H2599
Dual Rear Wheels	Fd	BX		7081 - D149	MD149	R40H5010	R40H5529	NR	NR
Single Rear Wheels	Fd	BX		7081 - D149	MD149	R40H5010	R40H5529	NR	NR
1976									
	Ra	BX	12 " x 3 "	2140AT - 358	R46358	R40H547	R40H4087	R40H2598	R40H2599
	Ra	BX	12 " x 3 "	2140AT - 358	R46358	R40H547	R40H4087	R40H2598	R40H2599
Dual Rear Wheels	Fd	BX		7081 - D149	MD149	R40H5010	R40H5529	NR	NR
Single Rear Wheels	Fd	BX		7081 - D149	MD149	R40H5010	R40H5529	NR	NR
1975									
	Ra	BX	12 " x 3 "	2140AT - 358	R46358	R40H547	R40H4087	R40H2598	R40H2599
	Ra	BX	12 " x 3 "	2140AT - 358	R46358	R40H547	R40H4087	R40H2598	R40H2599
Dual Rear Wheels	Fd	BX		7081 - D149	MD149	R40H5010	R40H5529	NR	NR
Single Rear Wheels	Fd	BX		7081 - D149	MD149	R40H5010	R40H5529	NR	NR
1974									
	Fa	BX	12 " x 3 "	2140AT - 358	R46358	R40H546	R40H7181	R40H2598	R40H2599
	Ra	BX	12 " x 3 "	2140AT - 358	R46358	R40H546	R40H7181	R40H2598	R40H2599
	Ra	BX	12 " x 3 "	2140AT - 358	R46358	R40H546	R40H7181	R40H2598	R40H2599
1973									
	Fa	BX	12 " x 3 "	2140AT - 358	R46358	R40H547	R40H4087	R40H2598	R40H2599
	Ra	BX	12 " x 3 "	2140AT - 358	R46358	R40H547	R40H4087	R40H2598	R40H2599
	Ra	BX	12 " x 3 "	2140AT - 358	R46358	R40H547	R40H4087	R40H2598	R40H2599
1972									
	Fa	BX	12 " x 3 "	2140AT - 358	R46358	R40H547	R40H4087	R40H2598	R40H2599
	Ra	BX	12 " x 3 "	2140AT - 358	R46358	R40H547	R40H4087	R40H2598	R40H2599
	Ra	BX	12 " x 3 "	2140AT - 358	R46358	R40H547	R40H4087	R40H2598	R40H2599
FORD									
B600 SERIES: SCHOOL BUS									
1995									
	Fd	DN		7149 - D236	MD236[341]	69310693	69310782	NR	NR
	Fd	DN		7149 - D236	MD236[341]	69310693	69310782	NR	NR
	Fd	DN		7141 - D224	MD224[340]	69310693	60050153	NR	NR
	Fd	DN		7149 - D236	MD236[341]	69310693	69310782	NR	NR
	Ra	LG	15 " x 5 "	4528A - 551	R40H597	R40H618	NR	NR	NR
	Ra	LG	15 " x 5 "	4528A - 542	N/A	R40H618	NR	SP7888S	SP7888S
	Ra	LG	15 " x 6 "	4504A - 543	N/A	R40H618	NR	NR	NR
	Ra	LG	15 " x 6 "	4504A - 543	N/A	R40H618	NR	SP7888S	SP7888S
	Ra	LG	15 " x 6 "	4504A - 543	N/A	R40H618	NR	SP7887S	SP7887S
	Ra	LG	15 " x 6 "	4504A - 543	N/A	R40H618	NR	NR	NR
1994									
	Fd	DN		7141 - D224	MD224[340]	69310693	60050153	NR	NR
	Fd	DN		7149 - D236	MD236[341]	69310693	69310782	NR	NR
	Fd	DN		7149 - D236	MD236[341]	69310693	69310782	NR	NR
	Fd	DN		7149 - D236	MD236[341]	69310693	69310782	NR	NR
	Ra	LG	15 " x 5 "	4528A - 550	R40H140	R40H618	NR	NR	NR
	Ra	LG	15 " x 5 "	4528A - 542	N/A	R40H618	NR	SP7888S	SP7888S
	Ra	LG	15 " x 6 "	4504A - 543	N/A	R40H618	NR	NR	NR
	Ra	LG	15 " x 6 "	4504A - 543	N/A	R40H618	NR	SP7887S	SP7887S
	Ra	LG	15 " x 6 "	4504A - 543	N/A	R40H618	NR	SP7888S	SP7888S
	Ra	LG	15 " x 6 "	4504A - 543	N/A	R40H618	NR	NR	NR
1993									
	Fd	DN		7149 - D236	MD236[341]	69310693	69310782	NR	NR
	Fd	DN		7141 - D224	MD224[340]	69310693	60050153	NR	NR
	Fd	DN		7149 - D236	MD236[341]	69310693	69310782	NR	NR
	Fd	DN		7149 - D236	MD236[341]	69310693	69310782	NR	NR
	Ra	LG	15 " x 5 "	4528A - 549	R40H599	R40H618	NR	NR	NR
	Ra	LG	15 " x 5 "	4528A - 542	N/A	R40H618	NR	SP7888S	SP7888S
	Ra	LG	15 " x 6 "	4504A - 543	N/A	R40H618	NR	SP7888S	SP7888S
	Ra	LG	15 " x 6 "	4504A - 543	N/A	R40H618	NR	NR	NR
	Ra	LG	15 " x 6 "	4504A - 543	N/A	R40H618	NR	NR	NR
	Ra	LG	15 " x 6 "	4504A - 543	N/A	R40H618	NR	SP7887S	SP7887S
1992									
	Fd	DN		7149 - D236	MD236[341]	69310693	69310782	NR	NR

9 - 6 Stud, Dayton Rotor, Hat Style
42 - 6 Stud, Dayton Rotor, "U" Style
45 - R44141382 is a hub & rotor, for rotor only use R44141193
37 - Also available as a New unit
43 - For Applications Taking A Longer Shim, Use R404151706
46 - R417086 Has 15/16" Bore Size
41 - Aluminum piston
44 - R44141664 is rotor only, for hub only use E-8396
93 - Rotor Only with Hub Casting # 99756

MERITOR DRUM OR ROTOR NO.	CALIPER OR CYLINDER BORE SIZE	MERITOR CALIPER OR WHEEL CYLINDER (LEFT)	MERITOR CALIPER OR WHEEL CYLINDER (RIGHT)	MERITOR CALIPER OR WHEEL CYLINDER REPAIR KIT	MERITOR CALIPER PISTON	MERITOR MASTER CYLINDER	MERITOR MASTER CYLINDER KIT	MERITOR BRAKE HOSE (LEFT)	MERITOR BRAKE HOSE (RIGHT)
DODGE(Cont.)									
W300, W350, PW300, PW350, W400, W450, PW400, PW450 SERIES 4WD PICKUP-1 TON(Cont.)									
R44140264[333]	1-1/16 "	R4133791	R 418145	R4166821	NR	-	-	-	-
R44140264[333]	1 "	R4133005	R4133004	R4166822	NR	-	-	-	-
R44141414[405]	3-3/8 "	R42R55098	R42R55099	R4066780	R4090021	-	-	-	-
R44141397[93]	3-3/8 "	R42R55098	R42R55099	R4066780	R4090021	-	-	-	-
R44140264[333]	1-1/16 "	R4133791	R 418145	R4166821	NR	-	-	-	-
R44140264[333]	1 "	R4133005	R4133004	R4166822	NR	-	-	-	-
R44141414[405]	3-3/8 "	R42R55098	R42R55099	R4066780	R4090021	-	-	-	-
R44141397[93]	3-3/8 "	R42R55098	R42R55099	R4066780	R4090021	-	-	-	-
R44140264[333]	1-1/16 "	R4133791	R 418145	R4166821	NR	-	-	-	-
R44140264[333]	1 "	R4133005	R4133004	R4166822	NR	-	-	-	-
R44141414[405]	3-3/8 "	R42R55098	R42R55099	R4066780	R4090021	-	-	-	-
R44141397[93]	3-3/8 "	R42R55098	R42R55099	R4066780	R4090021	-	-	-	-
R44140264[333]	1-1/8 "	R4133206	R4133207	R418187	NR	-	-	-	-
R44140264[333]	1-1/16 "	R4133791	R 418145	R4166821	NR	-	-	-	-
R44140264[333]	1 "	R4133004	R4133005	R4166822	NR	-	-	-	-
-	1-1/8 "	R4133206	R4133207	R418187	NR	-	-	-	-
R44140264[333]	1-1/16 "	R4133791	R 418145	R4166821	NR	-	-	-	-
-	1 "	R4133005	R4133004	R4166822	NR	-	-	-	-
-	1-1/8 "	R4133206	R4133207	R418187	NR	-	-	-	-
-	1 "	R4133005	R4133004	R4166822	NR	-	-	-	-
R44140264[333]	1-1/16 "	R4133791	R 418145	R4166821	NR	-	-	-	-
FORD									
B600 SERIES: SCHOOL BUS									
23-122743-002[187]	2-7/8 "	60050145X	60050145X[46]	60050146	69270702[41]	-	-	R4577461	R4577461
23-122703-002[186]	2-7/8 "	60050145X	60050145X[37]	60050146	69270702[41]	-	-	R4577461	R4577461
23-122700-002[9]	2-1/2 "	R424244X	R424244X[37]	60050266	69270757[41]	-	-	R4577461	R4577461
23-122691-002[42]	2-7/8 "	60050145X	60050145X[37]	60050146	69270702[41]	-	-	R4577461	R4577461
N/A	1-5/8 "	201181	201182	SP7895S	NR	-	-	R4577870	R4577870
N/A	1-5/8 "	201185	201186[329]	SP7895S	NR	-	-	R4577870	R4577870
N/A	1-5/8 "	201181	201182	SP7895S	NR	-	-	R4577870	R4577870
N/A	1-5/8 "	201185	201186[329]	SP7895S	NR	-	-	R4577870	R4577870
N/A	1-3/4 "	201183X	201184X[329]	SP7873S	NR	-	-	R4577870	R4577870
N/A	1-3/4 "	201179X	201180X	SP7873S	SP7880S[204]	-	-	R4577870	R4577870
23-122700-002[9]	2-1/2 "	R424244X	R424244X[37]	60050266	69270757[41]	-	-	R4577461	R4577461
23-122743-002[187]	2-7/8 "	60050145X	60050145X[45]	60050146	69270702[41]	-	-	R4577461	R4577461
23-122703-002[186]	2-7/8 "	60050145X	60050145X[37]	60050146	69270702[41]	-	-	R4577461	R4577461
23-122691-002[42]	2-7/8 "	60050145X	60050145X[37]	60050146	69270702[41]	-	-	R4577461	R4577461
N/A	1-5/8 "	201181	201182	SP7895S	NR	-	-	R4577870	R4577870
N/A	1-5/8 "	201185	201186[329]	SP7895S	NR	-	-	R4577870	R4577870
N/A	1-5/8 "	201181	201182	SP7895S	NR	-	-	R4577870	R4577870
N/A	1-3/4 "	201183X	201184X[329]	SP7873S	NR	-	-	R4577870	R4577870
N/A	1-5/8 "	201185	201186[329]	SP7895S	NR	-	-	R4577870	R4577870
N/A	1-3/4 "	201179X	201180X	SP7873S	SP7880S[204]	-	-	R4577870	R4577870
23-122691-002[42]	2-7/8 "	60050145X	60050145X[37]	60050146	69270702[41]	-	-	R4577461	R4577461
23-122700-002[9]	2-1/2 "	R424244X	R424244X[37]	60050266	69270757[41]	-	-	R4577461	R4577461
23-122703-002[186]	2-7/8 "	60050145X	60050145X[37]	60050146	69270702[41]	-	-	R4577461	R4577461
23-122743-002[187]	2-7/8 "	60050145X	60050145X[44]	60050146	69270702[41]	-	-	R4577461	R4577461
N/A	1-5/8 "	201181	201182	SP7895S	NR	-	-	R4577870	R4577870
N/A	1-5/8 "	201185	201186[329]	SP7895S	NR	-	-	R4577870	R4577870
N/A	1-5/8 "	201185	201186[329]	SP7895S	NR	-	-	R4577870	R4577870
N/A	1-3/4 "	201179X	201180X	SP7873S	SP7880S[204]	-	-	R4577870	R4577870
N/A	1-5/8 "	201181	201182	SP7895S	NR	-	-	R4577870	R4577870
N/A	1-3/4 "	201183X	201184X[329]	SP7873S	NR	-	-	R4577870	R4577870
23-122743-002[187]	2-7/8 "	60050145X	60050145X[43]	60050146	69270702[41]	-	-	R4577461	R4577461

186 - 10 Stud
187 - 6 Stud, 6.443" Hub
204 - Right Hand; use E-4057 for Left Hand Expander Kits
329 - Forward
333 - Except 9 1/4" Ring Gear
340 - Use 69160457 for Disc Pad Retainer Clip
341 - Use 69160445 for Disc Pad Retainer Clip
405 - Rotor Only

MAKE MODEL YEAR AXLE CODE AXLE WEIGHT	AXLE & BRK. TYPE	BRK. MFG.	BRAKE SIZE	FMSI	MERITOR DISC PAD OR BRAKE SHOE	MERITOR GUIDE PIN OR RETURN SPRING KIT	MERITOR CALIPER HWD. KIT OR RETURN SPRING KIT	MERITOR ADJUSTER KIT (LEFT WHEEL)	MERITOR ADJUSTER KIT (RIGHT WHEEL)
FORD(Cont.)									
B600 SERIES: SCHOOL BUS(Cont.)									
1992									
	Fd	DN		7141 - D224	MD224[340]	69310693	60050153	NR	NR
	Fd	DN		7149 - D236	MD236[341]	69310693	69310782	NR	NR
	Fd	DN		7149 - D236	MD236[341]	69310693	69310782	NR	NR
	Ra	LG	15 " x 5 "	4528A - 542	N/A	R40H618	NR	SP7888S	SP7888S
	Ra	LG	15 " x 5 "	4528A - 548	R40H130	R40H618	NR	NR	NR
	Ra	LG	15 " x 6 "	4504A - 543	N/A	R40H618	NR	SP7887S	SP7887S
	Ra	LG	15 " x 6 "	4504A - 543	N/A	R40H618	NR	NR	NR
	Ra	LG	15 " x 6 "	4504A - 543	N/A	R40H618	NR	NR	NR
	Ra	LG	15 " x 6 "	4504A - 543	N/A	R40H618	NR	SP7888S	SP7888S
1991									
	Fd	DN		7149 - D236	MD236[341]	69310693	69310782	NR	NR
	Fd	DN		7149 - D236	MD236[341]	69310693	69310782	NR	NR
	Fd	DN		7149 - D236	MD236[341]	69310693	69310782	NR	NR
	Fd	DN		7141 - D224	MD224[340]	69310693	60050153	NR	NR
	Ra	LG	15 " x 5 "	4528A - 542	N/A	R40H618	NR	SP7888S	SP7888S
	Ra	LG	15 " x 5 "	4528A - 547	R40H550	R40H618	NR	NR	NR
	Ra	LG	15 " x 6 "	4504A - 543	N/A	R40H618	NR	SP7887S	SP7887S
	Ra	LG	15 " x 6 "	4504A - 543	N/A	R40H618	NR	NR	NR
	Ra	LG	15 " x 6 "	4504A - 543	N/A	R40H618	NR	NR	NR
	Ra	LG	15 " x 6 "	4504A - 543	N/A	R40H618	NR	SP7888S	SP7888S
1990									
	Fd	DN		7149 - D236	MD236[341]	69310693	69310782	NR	NR
	Fd	DN		7149 - D236	MD236[341]	69310693	69310782	NR	NR
	Fd	DN		7149 - D236	MD236[341]	69310693	69310782	NR	NR
	Fd	DN		7141 - D224	MD224[340]	69310693	60050153	NR	NR
	Ra	LG	15 " x 5 "	4528A - 546	R40H521	R40H618	NR	NR	NR
	Ra	LG	15 " x 5 "	4528A - 542	N/A	R40H618	NR	SP7888S	SP7888S
	Ra	LG	15 " x 6 "	4504A - 543	N/A	R40H618	NR	SP7888S	SP7888S
	Ra	LG	15 " x 6 "	4504A - 543	N/A	R40H618	NR	NR	NR
	Ra	LG	15 " x 6 "	4504A - 543	N/A	R40H618	NR	NR	NR
	Ra	LG	15 " x 6 "	4504A - 543	N/A	R40H618	NR	SP7887S	SP7887S
1989									
	Fd	DN		7149 - D236	MD236[341]	69310693	69310782[43]	NR	NR
	Fd	DN		7141 - D224	MD224[340]	69310693	60050153	NR	NR
	Fd	DN		7149 - D236	MD236[341]	69310693	69310782	NR	NR
	Fd	DN		7149 - D236	MD236[341]	69310693	69310782[43]	NR	NR
	Ra	LG	15 " x 5 "	4528A - 545	R40H500	R40H618	NR	NR	NR
	Ra	LG	15 " x 5 "	4528A - 542	N/A	R40H618	NR	SP7888S	SP7888S
	Ra	LG	15 " x 6 "	4504A - 543	N/A	R40H618	NR	SP7888S	SP7888S
	Ra	LG	15 " x 6 "	4504A - 543	N/A	R40H618	NR	SP7887S	SP7887S
	Ra	LG	15 " x 6 "	4504A - 543	N/A	R40H618	NR	NR	NR
	Ra	LG	15 " x 6 "	4504A - 543	N/A	R40H618	NR	NR	NR
1988									
	Fd	DN		7149 - D236	MD236[341]	69310693	69310782[43]	NR	NR
	Fd	DN		7149 - D236	MD236[341]	69310693	69310782[43]	NR	NR
	Fd	DN		7149 - D236	MD236[341]	69310693	69310782[43]	NR	NR
	Fd	DN		7141 - D224	MD224[340]	69310693	60050153	NR	NR
	Ra	LG	15 " x 5 "	4528A - 544	N/A	R40H618	NR	NR	NR
	Ra	LG	15 " x 5 "	4528A - 542	N/A	R40H618	NR	SP7888S	SP7888S
	Ra	LG	15 " x 6 "	4504A - 543	N/A	R40H618	NR	SP7887S	SP7887S
	Ra	LG	15 " x 6 "	4504A - 543	N/A	R40H618	NR	SP7888S	SP7888S
	Ra	LG	15 " x 6 "	4504A - 543	N/A	R40H618	NR	NR	NR
	Ra	LG	15 " x 6 "	4504A - 543	N/A	R40H618	NR	NR	NR
1987									
	Fd	DN		7149 - D236	MD236[341]	69310693	69310782[43]	NR	NR
	Fd	DN		7149 - D236	MD236[341]	69310693	69310782[43]	NR	NR
	Fd	DN		7141 - D224	MD224[340]	69310693	60050153	NR	NR
	Fd	DN		7149 - D236	MD236[341]	69310693	69310782[43]	NR	NR
	Ra	LG	15 " x 5 "	4528A - 542	N/A	R40H618	NR	SP7888S	SP7888S
	Ra	LG	15 " x 6 "	4504A - 543	N/A	R40H618	NR	NR	NR
	Ra	LG	15 " x 6 "	4504A - 543	N/A	R40H618	NR	NR	NR
	Ra	LG	15 " x 6 "	4504A - 543	N/A	R40H618	NR	SP7888S	SP7888S
	Ra	LG	15 " x 6 "	4504A - 543	N/A	R40H618	NR	SP7887S	SP7887S
	Ra	LG	15 " x 6 "	4504A - 543	N/A	R40H618	NR	NR	NR

9 - 6 Stud, Dayton Rotor, Hat Style
37 - Also available as a New unit
38 - First design, may have external joining tube and uses steel pistons
39 - First design, uses steel pistons.
40 - For chrome plated steel version, use R4090070P
41 - Aluminum piston
42 - 6 Stud, Dayton Rotor, "U" Style
43 - For Applications Taking A Longer Shim, Use R404151706
186 - 10 Stud

MERITOR DRUM OR ROTOR NO.	CALIPER OR CYLINDER BORE SIZE	MERITOR CALIPER OR WHEEL CYLINDER (LEFT)	MERITOR CALIPER OR WHEEL CYLINDER (RIGHT)	MERITOR CALIPER OR WHEEL CYLINDER REPAIR KIT	MERITOR CALIPER PISTON	MERITOR MASTER CYLINDER	MERITOR MASTER CYLINDER KIT	MERITOR BRAKE HOSE (LEFT)	MERITOR BRAKE HOSE (RIGHT)
FORD(Cont.)									
B600 SERIES: SCHOOL BUS(Cont.)									
23-122700-002[9]	2-1/2 "	R424244X	R424244X[37]	60050266	69270757[41]	-	-	R4577461	R4577461
23-122691-002[42]	2-7/8 "	60050145X	60050145X[37]	60050146	69270702[41]	-	-	R4577461	R4577461
23-122703-002[186]	2-7/8 "	60050145X	60050145X[37]	60050146	69270702[41]	-	-	R4577461	R4577461
N/A	1-5/8 "	201185	201186[329]	SP7895S	NR	-	-	R4577870	R4577870
N/A	1-5/8 "	201181	201182	SP7895S	NR	-	-	R4577870	R4577870
N/A	1-3/4 "	201183X	201184X[329]	SP7873S	NR	-	-	R4577870	R4577870
N/A	1-3/4 "	201179X	201180X	SP7873S	SP7880S[204]	-	-	R4577870	R4577870
N/A	1-5/8 "	201181	201182	SP7895S	NR	-	-	R4577870	R4577870
N/A	1-5/8 "	201185	201186[329]	SP7895S	NR	-	-	R4577870	R4577870
23-122691-002[42]	2-7/8 "	60050145X	60050145X[37]	60050146	69270702[41]	-	-	R4577461	R4577461
23-122743-002[187]	2-7/8 "	60050145X	60050145X[42]	60050146	69270702[41]	-	-	R4577461	R4577461
23-122703-002[186]	2-7/8 "	60050145X	60050145X[37]	60050146	69270702[41]	-	-	R4577461	R4577461
23-122700-002[9]	2-1/2 "	R424244X	R424244X[37]	60050266	69270757[41]	-	-	R4577461	R4577461
N/A	1-5/8 "	201185	201186[329]	SP7895S	NR	-	-	R4577870	R4577870
N/A	1-5/8 "	201181	201182	SP7895S	NR	-	-	R4577870	R4577870
N/A	1-3/4 "	201183X	201184X[329]	SP7873S	NR	-	-	R4577870	R4577870
N/A	1-3/4 "	201179X	201180X	SP7873S	SP7880S[204]	-	-	R4577870	R4577870
N/A	1-5/8 "	201181	201182	SP7895S	NR	-	-	R4577870	R4577870
N/A	1-5/8 "	201185	201186[329]	SP7895S	NR	-	-	R4577870	R4577870
23-122743-002[187]	2-7/8 "	60050145X	60050145X[41]	60050146	69270702[41]	-	-	R4577461	R4577461
23-122703-002[186]	2-7/8 "	60050145X	60050145X[37]	60050146	69270702[41]	-	-	R4577461	R4577461
23-122691-002[42]	2-7/8 "	60050145X	60050145X[37]	60050146	69270702[41]	-	-	R4577461	R4577461
23-122700-002[9]	2-1/2 "	R424244X	R424244X[37]	60050266	69270757[41]	-	-	R4577461	R4577461
N/A	1-5/8 "	201181	201182	SP7895S	NR	-	-	R4577870	R4577870
N/A	1-5/8 "	201185	201186[329]	SP7895S	NR	-	-	R4577870	R4577870
N/A	1-5/8 "	201185	201186[329]	SP7895S	NR	-	-	R4577870	R4577870
N/A	1-3/4 "	201179X	201180X	SP7873S	SP7880S[204]	-	-	R4577870	R4577870
N/A	1-5/8 "	201181	201182	SP7895S	NR	-	-	R4577870	R4577870
N/A	1-3/4 "	201183X	201184X[329]	SP7873S	NR	-	-	R4577870	R4577870
23-122691-002[42]	2-7/8 "	60050145X	60050145X[37]	60050146	69270702[41]	-	-	R4577461	R4577461
23-122700-002[9]	2-1/2 "	R424244X	R424244X[37]	60050266	69270757[41]	-	-	R4577461	R4577461
23-122703-002[186]	2-7/8 "	60050145X	60050145X[37]	60050146	69270702[41]	-	-	R4577461	R4577461
23-122743-002[187]	2-7/8 "	60050145X	60050145X[40]	60050146	69270702[41]	-	-	R4577461	R4577461
N/A	1-5/8 "	201181	201182	SP7895S	NR	-	-	N/A	N/A
N/A	1-5/8 "	201185	201186[329]	SP7895S	NR	-	-	N/A	N/A
N/A	1-5/8 "	201185	201186[329]	SP7895S	NR	-	-	N/A	N/A
N/A	1-3/4 "	201183X	201184X[329]	SP7873S	NR	-	-	N/A	N/A
N/A	1-3/4 "	201179X	201180X	SP7873S	SP7880S[204]	-	-	N/A	N/A
N/A	1-5/8 "	201181	201182	SP7895S	NR	-	-	N/A	N/A
23-122691-002[42]	2-7/8 "	60050145X	60050145X[37]	60050146	69270702[41]	-	-	R4577461	R4577461
23-122703-002[186]	2-7/8 "	60050145X	60050145X[37]	60050146	69270702[41]	-	-	R4577461	R4577461
23-122743-002[187]	2-7/8 "	60050145X	60050145X[39]	60050146	69270702[41]	-	-	R4577461	R4577461
23-122700-002[9]	2-1/2 "	R424244X	R424244X[37]	60050266	69270757[41]	-	-	R4577461	R4577461
N/A	1-5/8 "	201181	201182	SP7895S	NR	-	-	N/A	N/A
N/A	1-5/8 "	201185	201186[329]	SP7895S	NR	-	-	N/A	N/A
N/A	1-3/4 "	201183X	201184X[329]	SP7873S	NR	-	-	N/A	N/A
N/A	1-5/8 "	201185	201186[329]	SP7895S	NR	-	-	N/A	N/A
N/A	1-5/8 "	201181	201182	SP7895S	NR	-	-	N/A	N/A
N/A	1-3/4 "	201179X	201180X	SP7873S	SP7880S[204]	-	-	N/A	N/A
23-122743-002[187]	2-7/8 "	60050145X	60050145X[38]	60050146	69270702[41]	-	-	R4577461	R4577461
23-122703-002[186]	2-7/8 "	60050145X	60050145X[37]	60050146	69270702[41]	-	-	R4577461	R4577461
23-122700-002[9]	2-1/2 "	R424244X	R424244X[37]	60050266	69270757[41]	-	-	R4577461	R4577461
23-122691-002[42]	2-7/8 "	60050145X	60050145X[37]	60050146	69270702[41]	-	-	R4577461	R4577461
N/A	1-5/8 "	201185	201186[329]	SP7895S	NR	-	-	N/A	N/A
N/A	1-5/8 "	201181	201182	SP7895S	NR	-	-	N/A	N/A
N/A	1-5/8 "	201181	201182	SP7895S	NR	-	-	N/A	N/A
N/A	1-5/8 "	201185	201186[329]	SP7895S	NR	-	-	N/A	N/A
N/A	1-3/4 "	201183X	201184X[329]	SP7873S	NR	-	-	N/A	N/A
N/A	1-3/4 "	201179X	201180X	SP7873S	SP7880S[204]	-	-	N/A	N/A

187 - 6 Stud, 6.443" Hub
204 - Right Hand; use E-4057 for Left Hand Expander Kits
329 - Forward
340 - Use 69160457 for Disc Pad Retainer Clip
341 - Use 69160445 for Disc Pad Retainer Clip

MAKE MODEL YEAR AXLE CODE AXLE WEIGHT	AXLE & BRK. TYPE	BRK. MFG.	BRAKE SIZE	FMSI	MERITOR DISC PAD OR BRAKE SHOE	MERITOR GUIDE PIN OR RETURN SPRING KIT	MERITOR CALIPER HWD. KIT OR RETURN SPRING KIT	MERITOR ADJUSTER KIT (LEFT WHEEL)	MERITOR ADJUSTER KIT (RIGHT WHEEL)
FORD(Cont.)									
B600 SERIES: SCHOOL BUS(Cont.)									
1986									
	Fd	DN		7149 - D236	MD236[341]	69310693	69310782	NR	NR
	Fd	DN		7149 - D236	MD236[341]	69310693	69310782	NR	NR
	Fd	DN		7149 - D236	MD236[341]	69310693	69310782	NR	NR
	Fd	DN		7141 - D224	MD224[340]	69310693	60050153	NR	NR
	Ra	LG	15 " x 5 "	4528A - 542	N/A	R40H618	NR	NR	NR
	Ra	LG	15 " x 5 "	4528A - 542	N/A	R40H618	NR	SP7888S	SP7888S
	Ra	LG	15 " x 6 "	4504A - 543	N/A	R40H618	NR	SP7888S	SP7888S
	Ra	LG	15 " x 6 "	4504A - 543	N/A	R40H618	NR	NR	NR
	Ra	LG	15 " x 6 "	4504A - 543	N/A	R40H618	NR	NR	NR
	Ra	LG	15 " x 6 "	4504A - 543	N/A	R40H618	NR	SP7887S	SP7887S
1985									
	Fd	DN		7141 - D224	MD224[340]	69310693	60050153	NR	NR
	Ra	LG	15 " x 5 "	4528A - 542	N/A	R40H618	NR	SP7888S	SP7888S
	Ra	LG	15 " x 5 "	4528A - 542	N/A	R40H618	NR	NR	NR
	Ra	LG	15 " x 6 "	4504A - 543	N/A	R40H618	NR	NR	NR
	Ra	LG	15 " x 6 "	4504A - 543	N/A	R40H618	NR	SP7887S	SP7887S
	Ra	LG	15 " x 6 "	4504A - 543	N/A	R40H618	NR	SP7888S	SP7888S
	Ra	LG	15 " x 6 "	4504A - 543	N/A	R40H618	NR	NR	NR
R130	Ra	KH	15 " x 4 "	4647 - 401	R700401	R40H595	R40H9220	R40H3538	R40H3539
1984									
	Fd	DN		7141 - D224	MD224[340]	69310693	60050153	NR	NR
	Ra	LG	15 " x 5 "	4528A - 542	N/A	R40H618	NR	SP7888S	SP7888S
	Ra	LG	15 " x 5 "	4528A - 542	N/A	R40H618	NR	NR	NR
	Ra	LG	15 " x 6 "	4504A - 543	N/A	R40H618	NR	SP7888S	SP7888S
	Ra	LG	15 " x 6 "	4504A - 543	N/A	R40H618	NR	SP7887S	SP7887S
	Ra	LG	15 " x 6 "	4504A - 543	N/A	R40H618	NR	NR	NR
	Ra	LG	15 " x 6 "	4504A - 543	N/A	R40H618	NR	NR	NR
R130	Ra	KH	15 " x 4 "	4647 - 401	R700401	R40H595	R40H9220	R40H3538	R40H3539
B700 SERIES: SCHOOL BUS									
1995									
	Fd	DN		7141 - D224	MD224[340]	69310693	60050153	NR	NR
	Fd	DN		7149 - D236	MD236[341]	69310693	69310782	NR	NR
	Fd	DN		7149 - D236	MD236[341]	69310693	69310782	NR	NR
	Fd	DN		7149 - D236	MD236[341]	69310693	69310782	NR	NR
	Ra	LG	15 " x 5 "	4528A - 542	N/A	R40H618	NR	SP7888S	SP7888S
	Ra	LG	15 " x 5 "	4528A - 551	R40H597	R40H618	NR	NR	NR
	Ra	LG	15 " x 6 "	4504A - 543	N/A	R40H618	NR	NR	NR
	Ra	LG	15 " x 6 "	4504A - 543	N/A	R40H618	NR	SP7887S	SP7887S
	Ra	LG	15 " x 6 "	4504A - 543	N/A	R40H618	NR	SP7888S	SP7888S
	Ra	LG	15 " x 6 "	4504A - 543	N/A	R40H618	NR	NR	NR
1994									
	Fd	DN		7141 - D224	MD224[340]	69310693	60050153	NR	NR
	Fd	DN		7149 - D236	MD236[341]	69310693	69310782	NR	NR
	Fd	DN		7149 - D236	MD236[341]	69310693	69310782	NR	NR
	Fd	DN		7149 - D236	MD236[341]	69310693	69310782	NR	NR
	Ra	LG	15 " x 5 "	4528A - 550	R40H140	R40H618	NR	NR	NR
	Ra	LG	15 " x 5 "	4528A - 542	N/A	R40H618	NR	SP7888S	SP7888S
	Ra	LG	15 " x 6 "	4504A - 543	N/A	R40H618	NR	NR	NR
	Ra	LG	15 " x 6 "	4504A - 543	N/A	R40H618	NR	SP7888S	SP7888S
	Ra	LG	15 " x 6 "	4504A - 543	N/A	R40H618	NR	SP7887S	SP7887S
	Ra	LG	15 " x 6 "	4504A - 543	N/A	R40H618	NR	NR	NR
1993									
	Fd	DN		7149 - D236	MD236[341]	69310693	69310782	NR	NR
	Fd	DN		7149 - D236	MD236[341]	69310693	69310782	NR	NR
	Fd	DN		7149 - D236	MD236[341]	69310693	69310782	NR	NR
	Fd	DN		7141 - D224	MD224[340]	69310693	60050153	NR	NR
	Ra	LG	15 " x 5 "	4528A - 549	R40H599	R40H618	NR	NR	NR
	Ra	LG	15 " x 5 "	4528A - 542	N/A	R40H618	NR	SP7888S	SP7888S
	Ra	LG	15 " x 6 "	4504A - 543	N/A	R40H618	NR	NR	NR
	Ra	LG	15 " x 6 "	4504A - 543	N/A	R40H618	NR	SP7888S	SP7888S
	Ra	LG	15 " x 6 "	4504A - 543	N/A	R40H618	NR	NR	NR
	Ra	LG	15 " x 6 "	4504A - 543	N/A	R40H618	NR	SP7887S	SP7887S
1992									
	Fd	DN		7149 - D236	MD236[341]	69310693	69310782	NR	NR

9 - 6 Stud, Dayton Rotor, Hat Style
42 - 6 Stud, Dayton Rotor, "U" Style
46 - R417086 Has 15/16" Bore Size
37 - Also available as a New unit
44 - R44141664 is rotor only, for hub only use E-8396
186 - 10 Stud
41 - Aluminum piston
45 - R44141382 is a hub & rotor, for rotor only use R44141193
187 - 6 Stud, 6.443" Hub

MERITOR DRUM OR ROTOR NO.	CALIPER OR CYLINDER BORE SIZE	MERITOR CALIPER OR WHEEL CYLINDER (LEFT)	MERITOR CALIPER OR WHEEL CYLINDER (RIGHT)	MERITOR CALIPER OR WHEEL CYLINDER REPAIR KIT	MERITOR CALIPER PISTON	MERITOR MASTER CYLINDER	MERITOR MASTER CYLINDER KIT	MERITOR BRAKE HOSE (LEFT)	MERITOR BRAKE HOSE (RIGHT)
									FORD(Cont.)
									B600 SERIES: SCHOOL BUS(Cont.)
23-122691-002[42]	2-7/8 "	60050145X	60050145X[37]	60050146	69270702[41]	-	-	R4577461	R4577461
23-122703-002[186]	2-7/8 "	60050145X	60050145X[37]	60050146	69270702[41]	-	-	R4577461	R4577461
23-122743-002[187]	2-7/8 "	60050145X	60050145X[37]	60050146	69270702[41]	-	-	R4577461	R4577461
23-122700-002[9]	2-1/2 "	R424244X	R424244X[37]	60050266	69270757[41]	-	-	R4577461	R4577461
N/A	1-5/8 "	201181	201182	SP7895S	NR	-	-	N/A	N/A
N/A	1-5/8 "	201185	201186[329]	SP7895S	NR	-	-	N/A	N/A
N/A	1-5/8 "	201185	201186[329]	SP7895S	NR	-	-	N/A	N/A
N/A	1-3/4 "	201179X	201180X	SP7873S	SP7880S[204]	-	-	N/A	N/A
N/A	1-5/8 "	201181	201182	SP7895S	NR	-	-	N/A	N/A
N/A	1-3/4 "	201183X	201184X[329]	SP7873S	NR	-	-	N/A	N/A
23-122700-002[9]	2-1/2 "	R424244X	R424244X[37]	60050266	69270757[41]	-	-	R4577461	R4577461
N/A	1-5/8 "	201185	201186[329]	SP7895S	NR	-	-	N/A	N/A
N/A	1-5/8 "	201181	201182	SP7895S	NR	-	-	N/A	N/A
N/A	1-3/4 "	201179X	201180X	SP7873S	SP7880S[204]	-	-	N/A	N/A
N/A	1-3/4 "	201183X	201184X[329]	SP7873S	NR	-	-	N/A	N/A
N/A	1-5/8 "	201185	201186[329]	SP7895S	NR	-	-	N/A	N/A
N/A	1-5/8 "	201181	201182	SP7895S	NR	-	-	N/A	N/A
N/A	1-1/2 "	R4033607	R4033607	R4166818	NR	-	-	-	-
23-122700-002[9]	2-1/2 "	R424244X	R424244X[37]	60050266	69270757[41]	-	-	R4577461	R4577461
N/A	1-5/8 "	201185	201186[329]	SP7895S	NR	-	-	N/A	N/A
N/A	1-5/8 "	201181	201182	SP7895S	NR	-	-	N/A	N/A
N/A	1-5/8 "	201185	201186[329]	SP7895S	NR	-	-	N/A	N/A
N/A	1-3/4 "	201183X	201184X[329]	SP7873S	NR	-	-	N/A	N/A
N/A	1-3/4 "	201179X	201180X	SP7873S	SP7880S[204]	-	-	N/A	N/A
N/A	1-5/8 "	201181	201182	SP7895S	NR	-	-	N/A	N/A
N/A	1-1/2 "	R4033607	R4033607	R4166818	NR	-	-	-	-
									B700 SERIES: SCHOOL BUS
23-122700-002[9]	2-1/2 "	R424244X	R424244X[37]	60050266	69270757[41]	-	-	R4577461	R4577461
23-122703-002[186]	2-7/8 "	60050145X	60050145X[37]	60050146	69270702[41]	-	-	R4577461	R4577461
23-122691-002[42]	2-7/8 "	60050145X	60050145X[37]	60050146	69270702[41]	-	-	R4577461	R4577461
23-122743-002[187]	2-7/8 "	60050145X	60050145X[46]	60050146	69270702[41]	-	-	R4577461	R4577461
N/A	1-5/8 "	201185	201186[329]	SP7895S	NR	-	-	R4577870	R4577870
N/A	1-5/8 "	201181	201182	SP7895S	NR	-	-	R4577870	R4577870
N/A	1-5/8 "	201181	201182	SP7895S	NR	-	-	R4577870	R4577870
N/A	1-3/4 "	201183X	201184X[329]	SP7873S	NR	-	-	R4577870	R4577870
N/A	1-5/8 "	201185	201186[329]	SP7895S	NR	-	-	R4577870	R4577870
N/A	1-3/4 "	201179X	201180X	SP7873S	SP7880S[204]	-	-	R4577870	R4577870
23-122700-002[9]	2-1/2 "	R424244X	R424244X[37]	60050266	69270757[41]	-	-	R4577461	R4577461
23-122743-002[187]	2-7/8 "	60050145X	60050145X[45]	60050146	69270702[41]	-	-	R4577461	R4577461
23-122703-002[186]	2-7/8 "	60050145X	60050145X[37]	60050146	69270702[41]	-	-	R4577461	R4577461
23-122691-002[42]	2-7/8 "	60050145X	60050145X[37]	60050146	69270702[41]	-	-	R4577461	R4577461
N/A	1-5/8 "	201181	201182	SP7895S	NR	-	-	R4577870	R4577870
N/A	1-5/8 "	201185	201186[329]	SP7895S	NR	-	-	R4577870	R4577870
N/A	1-5/8 "	201181	201182	SP7895S	NR	-	-	R4577870	R4577870
N/A	1-5/8 "	201185	201186[329]	SP7895S	NR	-	-	R4577870	R4577870
N/A	1-3/4 "	201183X	201184X[329]	SP7873S	NR	-	-	R4577870	R4577870
N/A	1-3/4 "	201179X	201180X	SP7873S	SP7880S[204]	-	-	R4577870	R4577870
23-122743-002[187]	2-7/8 "	60050145X	60050145X[44]	60050146	69270702[41]	-	-	R4577461	R4577461
23-122691-002[42]	2-7/8 "	60050145X	60050145X[37]	60050146	69270702[41]	-	-	R4577461	R4577461
23-122703-002[186]	2-7/8 "	60050145X	60050145X[37]	60050146	69270702[41]	-	-	R4577461	R4577461
23-122700-002[9]	2-1/2 "	R424244X	R424244X[37]	60050266	69270757[41]	-	-	R4577461	R4577461
N/A	1-5/8 "	201181	201182	SP7895S	NR	-	-	R4577870	R4577870
N/A	1-5/8 "	201185	201186[329]	SP7895S	NR	-	-	R4577870	R4577870
N/A	1-5/8 "	201181	201182	SP7895S	NR	-	-	R4577870	R4577870
N/A	1-5/8 "	201185	201186[329]	SP7895S	NR	-	-	R4577870	R4577870
N/A	1-3/4 "	201179X	201180X	SP7873S	SP7880S[204]	-	-	R4577870	R4577870
N/A	1-3/4 "	201183X	201184X[329]	SP7873S	NR	-	-	R4577870	R4577870
23-122691-002[42]	2-7/8 "	60050145X	60050145X[37]	60050146	69270702[41]	-	-	R4577461	R4577461

204 - Right Hand; use E-4057 for Left Hand Expander Kits
329 - Forward
340 - Use 69160457 for Disc Pad Retainer Clip
341 - Use 69160445 for Disc Pad Retainer Clip

MAKE MODEL YEAR AXLE CODE AXLE WEIGHT	AXLE & BRK. TYPE	BRK. MFG.	BRAKE SIZE	FMSI	MERITOR DISC PAD OR BRAKE SHOE	MERITOR GUIDE PIN OR RETURN SPRING KIT	MERITOR CALIPER HWD. KIT OR RETURN SPRING KIT	MERITOR ADJUSTER KIT (LEFT WHEEL)	MERITOR ADJUSTER KIT (RIGHT WHEEL)
FORD(Cont.)									
B700 SERIES: SCHOOL BUS(Cont.)									
1992									
	Fd	DN		7141 - D224	MD224[340]	69310693	60050153	NR	NR
	Fd	DN		7149 - D236	MD236[341]	69310693	69310782	NR	NR
	Fd	DN		7149 - D236	MD236[341]	69310693	69310782	NR	NR
	Ra	LG	15 " x 5 "	4528A - 542	N/A	R40H618	NR	SP7888S	SP7888S
	Ra	LG	15 " x 5 "	4528A - 548	R40H130	R40H618	NR	NR	NR
	Ra	LG	15 " x 6 "	4504A - 543	N/A	R40H618	NR	NR	NR
	Ra	LG	15 " x 6 "	4504A - 543	N/A	R40H618	NR	SP7888S	SP7888S
	Ra	LG	15 " x 6 "	4504A - 543	N/A	R40H618	NR	SP7887S	SP7887S
	Ra	LG	15 " x 6 "	4504A - 543	N/A	R40H618	NR	NR	NR
1991									
	Fd	DN		7149 - D236	MD236[341]	69310693	69310782	NR	NR
	Fd	DN		7149 - D236	MD236[341]	69310693	69310782	NR	NR
	Fd	DN		7149 - D236	MD236[341]	69310693	69310782	NR	NR
	Fd	DN		7141 - D224	MD224[340]	69310693	60050153	NR	NR
	Ra	LG	15 " x 5 "	4528A - 547	R40H550	R40H618	NR	NR	NR
	Ra	LG	15 " x 5 "	4528A - 542	N/A	R40H618	NR	SP7888S	SP7888S
	Ra	LG	15 " x 6 "	4504A - 543	N/A	R40H618	NR	SP7887S	SP7887S
	Ra	LG	15 " x 6 "	4504A - 543	N/A	R40H618	NR	NR	NR
	Ra	LG	15 " x 6 "	4504A - 543	N/A	R40H618	NR	NR	NR
	Ra	LG	15 " x 6 "	4504A - 543	N/A	R40H618	NR	SP7888S	SP7888S
1990									
	Fd	DN		7149 - D236	MD236[341]	69310693	69310782	NR	NR
	Fd	DN		7149 - D236	MD236[341]	69310693	69310782	NR	NR
	Fd	DN		7149 - D236	MD236[341]	69310693	69310782	NR	NR
	Fd	DN		7141 - D224	MD224[340]	69310693	60050153	NR	NR
	Ra	LG	15 " x 5 "	4528A - 546	R40H521	R40H618	NR	NR	NR
	Ra	LG	15 " x 5 "	4528A - 542	N/A	R40H618	NR	SP7888S	SP7888S
	Ra	LG	15 " x 6 "	4504A - 543	N/A	R40H618	NR	NR	NR
	Ra	LG	15 " x 6 "	4504A - 543	N/A	R40H618	NR	SP7888S	SP7888S
	Ra	LG	15 " x 6 "	4504A - 543	N/A	R40H618	NR	NR	NR
	Ra	LG	15 " x 6 "	4504A - 543	N/A	R40H618	NR	SP7887S	SP7887S
1989									
	Fd	DN		7149 - D236	MD236[341]	69310693	69310782[43]	NR	NR
	Fd	DN		7149 - D236	MD236[341]	69310693	69310782[43]	NR	NR
	Fd	DN		7149 - D236	MD236[341]	69310693	69310782[43]	NR	NR
	Fd	DN		7141 - D224	MD224[340]	69310693	60050153	NR	NR
	Ra	LG	15 " x 5 "	4528A - 545	R40H500	R40H618	NR	NR	NR
	Ra	LG	15 " x 5 "	4528A - 542	N/A	R40H618	NR	SP7888S	SP7888S
	Ra	LG	15 " x 6 "	4504A - 543	N/A	R40H618	NR	SP7888S	SP7888S
	Ra	LG	15 " x 6 "	4504A - 543	N/A	R40H618	NR	NR	NR
	Ra	LG	15 " x 6 "	4504A - 543	N/A	R40H618	NR	SP7887S	SP7887S
	Ra	LG	15 " x 6 "	4504A - 543	N/A	R40H618	NR	NR	NR
1988									
	Fd	DN		7141 - D224	MD224[340]	69310693	60050153	NR	NR
	Fd	DN		7149 - D236	MD236[341]	69310693	69310782[43]	NR	NR
	Fd	DN		7149 - D236	MD236[341]	69310693	69310782[43]	NR	NR
	Fd	DN		7149 - D236	MD236[341]	69310693	69310782[43]	NR	NR
	Ra	LG	15 " x 5 "	4528A - 542	N/A	R40H618	NR	SP7888S	SP7888S
	Ra	LG	15 " x 5 "	4528A - 544	N/A	R40H618	NR	NR	NR
	Ra	LG	15 " x 6 "	4504A - 543	N/A	R40H618	NR	NR	NR
	Ra	LG	15 " x 6 "	4504A - 543	N/A	R40H618	NR	SP7887S	SP7887S
	Ra	LG	15 " x 6 "	4504A - 543	N/A	R40H618	NR	NR	NR
	Ra	LG	15 " x 6 "	4504A - 543	N/A	R40H618	NR	SP7888S	SP7888S
1987									
	Fd	DN		7149 - D236	MD236[341]	69310693	69310782[43]	NR	NR
	Fd	DN		7141 - D224	MD224[340]	69310693	60050153	NR	NR
	Fd	DN		7149 - D236	MD236[341]	69310693	69310782[43]	NR	NR
	Fd	DN		7149 - D236	MD236[341]	69310693	69310782[43]	NR	NR
	Ra	LG	15 " x 5 "	4528A - 542	N/A	R40H618	NR	SP7888S	SP7888S
	Ra	LG	15 " x 6 "	4504A - 543	N/A	R40H618	NR	SP7888S	SP7888S
	Ra	LG	15 " x 6 "	4504A - 543	N/A	R40H618	NR	NR	NR
	Ra	LG	15 " x 6 "	4504A - 543	N/A	R40H618	NR	NR	NR
	Ra	LG	15 " x 6 "	4504A - 543	N/A	R40H618	NR	SP7887S	SP7887S
	Ra	LG	15 " x 6 "	4504A - 543	N/A	R40H618	NR	NR	NR

9 - 6 Stud, Dayton Rotor, Hat Style
37 - Also available as a New unit
38 - First design, may have external joining tube and uses steel pistons
39 - First design, uses steel pistons.
40 - For chrome plated steel version, use R4090070P
41 - Aluminum piston
42 - 6 Stud, Dayton Rotor, "U" Style
43 - For Applications Taking A Longer Shim, Use R404151706
186 - 10 Stud

MERITOR DRUM OR ROTOR NO.	CALIPER OR CYLINDER BORE SIZE	MERITOR CALIPER OR WHEEL CYLINDER (LEFT)	MERITOR CALIPER OR WHEEL CYLINDER (RIGHT)	MERITOR CALIPER OR WHEEL CYLINDER REPAIR KIT	MERITOR CALIPER PISTON	MERITOR MASTER CYLINDER	MERITOR MASTER CYLINDER KIT	MERITOR BRAKE HOSE (LEFT)	MERITOR BRAKE HOSE (RIGHT)
FORD(Cont.)									
B700 SERIES: SCHOOL BUS(Cont.)									
23-122700-002[9]	2-1/2 "	R424244X	R424244X[37]	60050266	69270757[41]	-	-	R4577461	R4577461
23-122743-002[187]	2-7/8 "	60050145X	60050145X[43]	60050146	69270702[41]	-	-	R4577461	R4577461
23-122703-002[186]	2-7/8 "	60050145X	60050145X[37]	60050146	69270702[41]	-	-	R4577461	R4577461
N/A	1-5/8 "	201185	201186[329]	SP7895S	NR	-	-	R4577870	R4577870
N/A	1-5/8 "	201181	201182	SP7895S	NR	-	-	R4577870	R4577870
N/A	1-3/4 "	201179X	201180X	SP7873S	SP7880S[204]	-	-	R4577870	R4577870
N/A	1-5/8 "	201185	201186[329]	SP7895S	NR	-	-	R4577870	R4577870
N/A	1-3/4 "	201183X	201184X[329]	SP7873S	NR	-	-	R4577870	R4577870
N/A	1-5/8 "	201181	201182	SP7895S	NR	-	-	R4577870	R4577870
23-122743-002[187]	2-7/8 "	60050145X	60050145X[42]	60050146	69270702[41]	-	-	R4577461	R4577461
23-122703-002[186]	2-7/8 "	60050145X	60050145X[37]	60050146	69270702[41]	-	-	R4577461	R4577461
23-122691-002[42]	2-7/8 "	60050145X	60050145X[37]	60050146	69270702[41]	-	-	R4577461	R4577461
23-122700-002[9]	2-1/2 "	R424244X	R424244X[37]	60050266	69270757[41]	-	-	R4577461	R4577461
N/A	1-5/8 "	201181	201182	SP7895S	NR	-	-	R4577870	R4577870
N/A	1-5/8 "	201185	201186[329]	SP7895S	NR	-	-	R4577870	R4577870
N/A	1-3/4 "	201183X	201184X[329]	SP7873S	NR	-	-	R4577870	R4577870
N/A	1-3/4 "	201179X	201180X	SP7873S	SP7880S[204]	-	-	R4577870	R4577870
N/A	1-5/8 "	201181	201182	SP7895S	NR	-	-	R4577870	R4577870
N/A	1-5/8 "	201185	201186[329]	SP7895S	NR	-	-	R4577870	R4577870
23-122691-002[42]	2-7/8 "	60050145X	60050145X[37]	60050146	69270702[41]	-	-	R4577461	R4577461
23-122743-002[187]	2-7/8 "	60050145X	60050145X[41]	60050146	69270702[41]	-	-	R4577461	R4577461
23-122703-002[186]	2-7/8 "	60050145X	60050145X[37]	60050146	69270702[41]	-	-	R4577461	R4577461
23-122700-002[9]	2-1/2 "	R424244X	R424244X[37]	60050266	69270757[41]	-	-	R4577461	R4577461
N/A	1-5/8 "	201181	201182	SP7895S	NR	-	-	R4577870	R4577870
N/A	1-5/8 "	201185	201186[329]	SP7895S	NR	-	-	R4577870	R4577870
N/A	1-5/8 "	201181	201182	SP7895S	NR	-	-	R4577870	R4577870
N/A	1-5/8 "	201185	201186[329]	SP7895S	NR	-	-	R4577870	R4577870
N/A	1-3/4 "	201179X	201180X	SP7873S	SP7880S[204]	-	-	R4577870	R4577870
N/A	1-3/4 "	201183X	201184X[329]	SP7873S	NR	-	-	R4577870	R4577870
23-122743-002[187]	2-7/8 "	60050145X	60050145X[40]	60050146	69270702[41]	-	-	R4577461	R4577461
23-122691-002[42]	2-7/8 "	60050145X	60050145X[37]	60050146	69270702[41]	-	-	R4577461	R4577461
23-122703-002[186]	2-7/8 "	60050145X	60050145X[37]	60050146	69270702[41]	-	-	R4577461	R4577461
23-122700-002[9]	2-1/2 "	R424244X	R424244X[37]	60050266	69270757[41]	-	-	R4577461	R4577461
N/A	1-5/8 "	201181	201182	SP7895S	NR	-	-	N/A	N/A
N/A	1-5/8 "	201185	201186[329]	SP7895S	NR	-	-	N/A	N/A
N/A	1-5/8 "	201185	201186[329]	SP7895S	NR	-	-	N/A	N/A
N/A	1-5/8 "	201181	201182	SP7895S	NR	-	-	N/A	N/A
N/A	1-3/4 "	201183X	201184X[329]	SP7873S	NR	-	-	N/A	N/A
N/A	1-3/4 "	201179X	201180X	SP7873S	SP7880S[204]	-	-	N/A	N/A
23-122700-002[9]	2-1/2 "	R424244X	R424244X[37]	60050266	69270757[41]	-	-	R4577461	R4577461
23-122691-002[42]	2-7/8 "	60050145X	60050145X[37]	60050146	69270702[41]	-	-	R4577461	R4577461
23-122743-002[187]	2-7/8 "	60050145X	60050145X[39]	60050146	69270702[41]	-	-	R4577461	R4577461
23-122703-002[186]	2-7/8 "	60050145X	60050145X[37]	60050146	69270702[41]	-	-	R4577461	R4577461
N/A	1-5/8 "	201185	201186[329]	SP7895S	NR	-	-	N/A	N/A
N/A	1-5/8 "	201181	201182	SP7895S	NR	-	-	N/A	N/A
N/A	1-3/4 "	201179X	201180X	SP7873S	SP7880S[204]	-	-	N/A	N/A
N/A	1-3/4 "	201183X	201184X[329]	SP7873S	NR	-	-	N/A	N/A
N/A	1-5/8 "	201181	201182	SP7895S	NR	-	-	N/A	N/A
N/A	1-5/8 "	201185	201186[329]	SP7895S	NR	-	-	N/A	N/A
23-122703-002[186]	2-7/8 "	60050145X	60050145X[37]	60050146	69270702[41]	-	-	R4577461	R4577461
23-122700-002[9]	2-1/2 "	R424244X	R424244X[37]	60050266	69270757[41]	-	-	R4577461	R4577461
23-122691-002[42]	2-7/8 "	60050145X	60050145X[37]	60050146	69270702[41]	-	-	R4577461	R4577461
23-122743-002[187]	2-7/8 "	60050145X	60050145X[38]	60050146	69270702[41]	-	-	R4577461	R4577461
N/A	1-5/8 "	201185	201186[329]	SP7895S	NR	-	-	N/A	N/A
N/A	1-5/8 "	201185	201186[329]	SP7895S	NR	-	-	N/A	N/A
N/A	1-5/8 "	201181	201182	SP7895S	NR	-	-	N/A	N/A
N/A	1-3/4 "	201179X	201180X	SP7873S	SP7880S[204]	-	-	N/A	N/A
N/A	1-3/4 "	201183X	201184X[329]	SP7873S	NR	-	-	N/A	N/A
N/A	1-5/8 "	201181	201182	SP7895S	NR	-	-	N/A	N/A

187 - 6 Stud, 6.443" Hub
204 - Right Hand; use E-4057 for Left Hand Expander Kits
329 - Forward
340 - Use 69160457 for Disc Pad Retainer Clip
341 - Use 69160445 for Disc Pad Retainer Clip

MAKE MODEL YEAR AXLE CODE AXLE WEIGHT	AXLE & BRK. TYPE	BRK. MFG.	BRAKE SIZE	FMSI	MERITOR DISC PAD OR BRAKE SHOE	MERITOR GUIDE PIN OR RETURN SPRING KIT	MERITOR CALIPER HWD. KIT OR RETURN SPRING KIT	MERITOR ADJUSTER KIT (LEFT WHEEL)	MERITOR ADJUSTER KIT (RIGHT WHEEL)
FORD(Cont.)									
B700 SERIES: SCHOOL BUS(Cont.)									
1986									
	Fd	DN		7149 - D236	MD236[341]	69310693	69310782	NR	NR
	Fd	DN		7141 - D224	MD224[340]	69310693	60050153	NR	NR
	Fd	DN		7149 - D236	MD236[341]	69310693	69310782	NR	NR
	Fd	DN		7149 - D236	MD236[341]	69310693	69310782	NR	NR
	Ra	LG	15 " x 5 "	4528A - 542	N/A	R40H618	NR	SP7888S	SP7888S
	Ra	LG	15 " x 5 "	4528A - 542	N/A	R40H618	NR	NR	NR
	Ra	LG	15 " x 6 "	4504A - 543	N/A	R40H618	NR	NR	NR
	Ra	LG	15 " x 6 "	4504A - 543	N/A	R40H618	NR	SP7887S	SP7887S
	Ra	LG	15 " x 6 "	4504A - 543	N/A	R40H618	NR	SP7888S	SP7888S
	Ra	LG	15 " x 6 "	4504A - 543	N/A	R40H618	NR	NR	NR
1985									
	Fd	DN		7141 - D224	MD224[340]	69310693	60050153	NR	NR
	Ra	LG	15 " x 5 "	4528A - 542	N/A	R40H618	NR	NR	NR
	Ra	LG	15 " x 5 "	4528A - 542	N/A	R40H618	NR	SP7888S	SP7888S
	Ra	LG	15 " x 6 "	4504A - 543	N/A	R40H618	NR	SP7887S	SP7887S
	Ra	LG	15 " x 6 "	4504A - 543	N/A	R40H618	NR	NR	NR
	Ra	LG	15 " x 6 "	4504A - 543	N/A	R40H618	NR	SP7888S	SP7888S
	Ra	LG	15 " x 6 "	4504A - 543	N/A	R40H618	NR	NR	NR
R130	Ra	KH	15 " x 4 "	4647 - 401	R700401	R40H595	R40H9220	R40H3538	R40H3539
1984									
	Fd	DN		7141 - D224	MD224[340]	69310693	60050153	NR	NR
	Ra	LG	15 " x 5 "	4528A - 542	N/A	R40H618	NR	NR	NR
	Ra	LG	15 " x 5 "	4528A - 542	N/A	R40H618	NR	SP7888S	SP7888S
	Ra	LG	15 " x 6 "	4504A - 543	N/A	R40H618	NR	SP7887S	SP7887S
	Ra	LG	15 " x 6 "	4504A - 543	N/A	R40H618	NR	SP7888S	SP7888S
	Ra	LG	15 " x 6 "	4504A - 543	N/A	R40H618	NR	NR	NR
	Ra	LG	15 " x 6 "	4504A - 543	N/A	R40H618	NR	NR	NR
R130	Ra	KH	15 " x 4 "	4647 - 401	R700401	R40H595	R40H9220	R40H3538	R40H3539
B800 SERIES: SCHOOL BUS									
1998									
	Fd	DN		7149 - D236	MD236[341]	69310693	69310782	NR	NR
	Fd	DN		7149 - D236	MD236[341]	69310693	69310782	NR	NR
	Fd	DN		7149 - D236	MD236[341]	69310693	69310782	NR	NR
	Fd	DN		7141 - D224	MD224[340]	69310693	60050153	NR	NR
	Ra	LG	15 " x 5 "	4528A - 551	R40H597	R40H618	NR	NR	NR
	Ra	LG	15 " x 5 "	4528A - 542	N/A	R40H618	NR	SP7888S	SP7888S
	Ra	LG	15 " x 6 "	4504A - 543	N/A	R40H618	NR	SP7887S	SP7887S
	Ra	LG	15 " x 6 "	4504A - 543	N/A	R40H618	NR	SP7888S	SP7888S
	Ra	LG	15 " x 6 "	4504A - 543	N/A	R40H618	NR	NR	NR
	Ra	LG	15 " x 6 "	4504A - 543	N/A	R40H618	NR	NR	NR
1997									
	Fd	DN		7149 - D236	MD236[341]	69310693	69310782	NR	NR
	Fd	DN		7141 - D224	MD224[340]	69310693	60050153	NR	NR
	Fd	DN		7149 - D236	MD236[341]	69310693	69310782	NR	NR
	Fd	DN		7149 - D236	MD236[341]	69310693	69310782	NR	NR
	Ra	LG	15 " x 5 "	4528A - 551	R40H597	R40H618	NR	NR	NR
	Ra	LG	15 " x 5 "	4528A - 542	N/A	R40H618	NR	SP7888S	SP7888S
	Ra	LG	15 " x 6 "	4504A - 543	N/A	R40H618	NR	SP7888S	SP7888S
	Ra	LG	15 " x 6 "	4504A - 543	N/A	R40H618	NR	NR	NR
	Ra	LG	15 " x 6 "	4504A - 543	N/A	R40H618	NR	SP7887S	SP7887S
	Ra	LG	15 " x 6 "	4504A - 543	N/A	R40H618	NR	NR	NR
1996									
	Fd	DN		7149 - D236	MD236[341]	69310693	69310782	NR	NR
	Fd	DN		7141 - D224	MD224[340]	69310693	60050153	NR	NR
	Fd	DN		7149 - D236	MD236[341]	69310693	69310782	NR	NR
	Fd	DN		7149 - D236	MD236[341]	69310693	69310782	NR	NR
	Ra	LG	15 " x 5 "	4528A - 551	R40H597	R40H618	NR	NR	NR
	Ra	LG	15 " x 5 "	4528A - 542	N/A	R40H618	NR	SP7888S	SP7888S
	Ra	LG	15 " x 6 "	4504A - 543	N/A	R40H618	NR	SP7888S	SP7888S
	Ra	LG	15 " x 6 "	4504A - 543	N/A	R40H618	NR	NR	NR
	Ra	LG	15 " x 6 "	4504A - 543	N/A	R40H618	NR	NR	NR
	Ra	LG	15 " x 6 "	4504A - 543	N/A	R40H618	NR	SP7887S	SP7887S
1995									
	Fd	DN		7149 - D236	MD236[341]	69310693	69310782	NR	NR

9 - 6 Stud, Dayton Rotor, Hat Style
42 - 6 Stud, Dayton Rotor, "U" Style
187 - 6 Stud, 6.443" Hub
37 - Also available as a New unit
46 - R417086 Has 15/16" Bore Size
204 - Right Hand; use E-4057 for Left Hand Expander Kits
41 - Aluminum piston
186 - 10 Stud
329 - Forward

MERITOR DRUM OR ROTOR NO.	CALIPER OR CYLINDER BORE SIZE	MERITOR CALIPER OR WHEEL CYLINDER (LEFT)	MERITOR CALIPER OR WHEEL CYLINDER (RIGHT)	MERITOR CALIPER OR WHEEL CYLINDER REPAIR KIT	MERITOR CALIPER PISTON	MERITOR MASTER CYLINDER	MERITOR MASTER CYLINDER KIT	MERITOR BRAKE HOSE (LEFT)	MERITOR BRAKE HOSE (RIGHT)
									FORD(Cont.)
									B700 SERIES: SCHOOL BUS(Cont.)
23-122703-002[186]	2-7/8 "	60050145X	60050145X[37]	60050146	69270702[41]	-	-	R4577461	R4577461
23-122700-002[9]	2-1/2 "	R424244X	R424244X[37]	60050266	69270757[41]	-	-	R4577461	R4577461
23-122691-002[42]	2-7/8 "	60050145X	60050145X[37]	60050146	69270702[41]	-	-	R4577461	R4577461
23-122743-002[187]	2-7/8 "	60050145X	60050145X[37]	60050146	69270702[41]	-	-	R4577461	R4577461
N/A	1-5/8 "	201185	201186[329]	SP7895S	NR	-	-	N/A	N/A
N/A	1-5/8 "	201181	201182	SP7895S	NR	-	-	N/A	N/A
N/A	1-5/8 "	201181	201182	SP7895S	NR	-	-	N/A	N/A
N/A	1-3/4 "	201183X	201184X[329]	SP7873S	NR	-	-	N/A	N/A
N/A	1-5/8 "	201185	201186[329]	SP7895S	NR	-	-	N/A	N/A
N/A	1-3/4 "	201179X	201180X	SP7873S	SP7880S[204]	-	-	N/A	N/A
23-122700-002[9]	2-1/2 "	R424244X	R424244X[37]	60050266	69270757[41]	-	-	R4577461	R4577461
N/A	1-5/8 "	201181	201182	SP7895S	NR	-	-	N/A	N/A
N/A	1-5/8 "	201185	201186[329]	SP7895S	NR	-	-	N/A	N/A
N/A	1-3/4 "	201183X	201184X[329]	SP7873S	NR	-	-	N/A	N/A
N/A	1-5/8 "	201181	201182	SP7895S	NR	-	-	N/A	N/A
N/A	1-5/8 "	201185	201186[329]	SP7895S	NR	-	-	N/A	N/A
N/A	1-3/4 "	201179X	201180X	SP7873S	SP7880S[204]	-	-	N/A	N/A
N/A	1-1/2 "	R4033607	R4033607	R4166818	NR	-	-	-	-
23-122700-002[9]	2-1/2 "	R424244X	R424244X[37]	60050266	69270757[41]	-	-	R4577461	R4577461
N/A	1-5/8 "	201181	201182	SP7895S	NR	-	-	N/A	N/A
N/A	1-5/8 "	201185	201186[329]	SP7895S	NR	-	-	N/A	N/A
N/A	1-3/4 "	201183X	201184X[329]	SP7873S	NR	-	-	N/A	N/A
N/A	1-5/8 "	201185	201186[329]	SP7895S	NR	-	-	N/A	N/A
N/A	1-5/8 "	201181	201182	SP7895S	NR	-	-	N/A	N/A
N/A	1-3/4 "	201179X	201180X	SP7873S	SP7880S[204]	-	-	N/A	N/A
N/A	1-1/2 "	R4033607	R4033607	R4166818	NR	-	-	-	-
									B800 SERIES: SCHOOL BUS
23-122743-002[187]	2-7/8 "	60050145X	60050145X[46]	60050146	69270702[41]	-	-	R4577461	R4577461
23-122703-002[186]	2-7/8 "	60050145X	60050145X[37]	60050146	69270702[41]	-	-	R4577461	R4577461
23-122691-002[42]	2-7/8 "	60050145X	60050145X[37]	60050146	69270702[41]	-	-	R4577461	R4577461
23-122700-002[9]	2-1/2 "	R424244X	R424244X[37]	60050266	69270757[41]	-	-	R4577461	R4577461
N/A	1-5/8 "	201181	201182	SP7895S	NR	-	-	R4577870	R4577870
N/A	1-5/8 "	201185	201186[329]	SP7895S	NR	-	-	R4577870	R4577870
N/A	1-3/4 "	201183X	201184X[329]	SP7873S	NR	-	-	R4577870	R4577870
N/A	1-5/8 "	201185	201186[329]	SP7895S	NR	-	-	R4577870	R4577870
N/A	1-5/8 "	201181	201182	SP7895S	NR	-	-	R4577870	R4577870
N/A	1-3/4 "	201179X	201180X	SP7873S	SP7880S[204]	-	-	R4577870	R4577870
23-122691-002[42]	2-7/8 "	60050145X	60050145X[37]	60050146	69270702[41]	-	-	R4577461	R4577461
23-122700-002[9]	2-1/2 "	R424244X	R424244X[37]	60050266	69270757[41]	-	-	R4577461	R4577461
23-122703-002[186]	2-7/8 "	60050145X	60050145X[37]	60050146	69270702[41]	-	-	R4577461	R4577461
23-122743-002[187]	2-7/8 "	60050145X	60050145X[46]	60050146	69270702[41]	-	-	R4577461	R4577461
N/A	1-5/8 "	201181	201182	SP7895S	NR	-	-	R4577870	R4577870
N/A	1-5/8 "	201185	201186[329]	SP7895S	NR	-	-	R4577870	R4577870
N/A	1-5/8 "	201185	201186[329]	SP7895S	NR	-	-	R4577870	R4577870
N/A	1-3/4 "	201179X	201180X	SP7873S	SP7880S[204]	-	-	R4577870	R4577870
N/A	1-3/4 "	201183X	201184X[329]	SP7873S	NR	-	-	R4577870	R4577870
N/A	1-5/8 "	201181	201182	SP7895S	NR	-	-	R4577870	R4577870
23-122743-002[187]	2-7/8 "	60050145X	60050145X[46]	60050146	69270702[41]	-	-	R4577461	R4577461
23-122700-002[9]	2-1/2 "	R424244X	R424244X[37]	60050266	69270757[41]	-	-	R4577461	R4577461
23-122691-002[42]	2-7/8 "	60050145X	60050145X[37]	60050146	69270702[41]	-	-	R4577461	R4577461
23-122703-002[186]	2-7/8 "	60050145X	60050145X[37]	60050146	69270702[41]	-	-	R4577461	R4577461
N/A	1-5/8 "	201181	201182	SP7895S	NR	-	-	R4577870	R4577870
N/A	1-5/8 "	201185	201186[329]	SP7895S	NR	-	-	R4577870	R4577870
N/A	1-5/8 "	201185	201186[329]	SP7895S	NR	-	-	R4577870	R4577870
N/A	1-5/8 "	201181	201182	SP7895S	NR	-	-	R4577870	R4577870
N/A	1-3/4 "	201179X	201180X	SP7873S	SP7880S[204]	-	-	R4577870	R4577870
N/A	1-3/4 "	201183X	201184X[329]	SP7873S	NR	-	-	R4577870	R4577870
23-122691-002[42]	2-7/8 "	60050145X	60050145X[37]	60050146	69270702[41]	-	-	R4577461	R4577461

340 - Use 69160457 for Disc Pad Retainer Clip

341 - Use 69160445 for Disc Pad Retainer Clip

MAKE MODEL YEAR AXLE CODE AXLE WEIGHT	AXLE & BRK. TYPE	BRK. MFG.	BRAKE SIZE	FMSI	MERITOR DISC PAD OR BRAKE SHOE	MERITOR GUIDE PIN OR RETURN SPRING KIT	MERITOR CALIPER HWD. KIT OR RETURN SPRING KIT	MERITOR ADJUSTER KIT (LEFT WHEEL)	MERITOR ADJUSTER KIT (RIGHT WHEEL)
FORD(Cont.)									
B800 SERIES: SCHOOL BUS(Cont.)									
1995									
	Fd	DN		7149 - D236	MD236[341]	69310693	69310782	NR	NR
	Fd	DN		7149 - D236	MD236[341]	69310693	69310782	NR	NR
	Fd	DN		7141 - D224	MD224[340]	69310693	60050153	NR	NR
	Ra	LG	15 " x 5 "	4528A - 551	R40H597	R40H618	NR	NR	NR
	Ra	LG	15 " x 5 "	4528A - 542	N/A	R40H618	NR	SP7888S	SP7888S
	Ra	LG	15 " x 6 "	4504A - 543	N/A	R40H618	NR	NR	NR
	Ra	LG	15 " x 6 "	4504A - 543	N/A	R40H618	NR	SP7888S	SP7888S
	Ra	LG	15 " x 6 "	4504A - 543	N/A	R40H618	NR	NR	NR
	Ra	LG	15 " x 6 "	4504A - 543	N/A	R40H618	NR	SP7887S	SP7887S
1994									
	Fd	DN		7149 - D236	MD236[341]	69310693	69310782	NR	NR
	Fd	DN		7141 - D224	MD224[340]	69310693	60050153	NR	NR
	Fd	DN		7149 - D236	MD236[341]	69310693	69310782	NR	NR
	Fd	DN		7149 - D236	MD236[341]	69310693	69310782	NR	NR
	Ra	LG	15 " x 5 "	4528A - 550	R40H140	R40H618	NR	NR	NR
	Ra	LG	15 " x 5 "	4528A - 542	N/A	R40H618	NR	SP7888S	SP7888S
	Ra	LG	15 " x 6 "	4504A - 543	N/A	R40H618	NR	SP7888S	SP7888S
	Ra	LG	15 " x 6 "	4504A - 543	N/A	R40H618	NR	NR	NR
	Ra	LG	15 " x 6 "	4504A - 543	N/A	R40H618	NR	SP7887S	SP7887S
	Ra	LG	15 " x 6 "	4504A - 543	N/A	R40H618	NR	NR	NR
1993									
	Fd	DN		7149 - D236	MD236[341]	69310693	69310782	NR	NR
	Fd	DN		7141 - D224	MD224[340]	69310693	60050153	NR	NR
	Fd	DN		7149 - D236	MD236[341]	69310693	69310782	NR	NR
	Fd	DN		7149 - D236	MD236[341]	69310693	69310782	NR	NR
	Ra	LG	15 " x 5 "	4528A - 549	R40H599	R40H618	NR	NR	NR
	Ra	LG	15 " x 5 "	4528A - 542	N/A	R40H618	NR	SP7888S	SP7888S
	Ra	LG	15 " x 6 "	4504A - 543	N/A	R40H618	NR	NR	NR
	Ra	LG	15 " x 6 "	4504A - 543	N/A	R40H618	NR	SP7888S	SP7888S
	Ra	LG	15 " x 6 "	4504A - 543	N/A	R40H618	NR	NR	NR
	Ra	LG	15 " x 6 "	4504A - 543	N/A	R40H618	NR	SP7887S	SP7887S
1992									
	Fd	DN		7141 - D224	MD224[340]	69310693	60050153	NR	NR
	Fd	DN		7149 - D236	MD236[341]	69310693	69310782	NR	NR
	Fd	DN		7149 - D236	MD236[341]	69310693	69310782	NR	NR
	Fd	DN		7149 - D236	MD236[341]	69310693	69310782	NR	NR
	Ra	LG	15 " x 5 "	4528A - 548	R40H130	R40H618	NR	NR	NR
	Ra	LG	15 " x 5 "	4528A - 542	N/A	R40H618	NR	SP7888S	SP7888S
	Ra	LG	15 " x 6 "	4504A - 543	N/A	R40H618	NR	NR	NR
	Ra	LG	15 " x 6 "	4504A - 543	N/A	R40H618	NR	SP7888S	SP7888S
	Ra	LG	15 " x 6 "	4504A - 543	N/A	R40H618	NR	NR	NR
	Ra	LG	15 " x 6 "	4504A - 543	N/A	R40H618	NR	SP7887S	SP7887S
1991									
	Fd	DN		7141 - D224	MD224[340]	69310693	60050153	NR	NR
	Fd	DN		7149 - D236	MD236[341]	69310693	69310782	NR	NR
	Fd	DN		7149 - D236	MD236[341]	69310693	69310782	NR	NR
	Fd	DN		7149 - D236	MD236[341]	69310693	69310782	NR	NR
	Ra	LG	15 " x 5 "	4528A - 542	N/A	R40H618	NR	SP7888S	SP7888S
	Ra	LG	15 " x 5 "	4528A - 547	R40H550	R40H618	NR	NR	NR
	Ra	LG	15 " x 6 "	4504A - 543	N/A	R40H618	NR	NR	NR
	Ra	LG	15 " x 6 "	4504A - 543	N/A	R40H618	NR	NR	NR
	Ra	LG	15 " x 6 "	4504A - 543	N/A	R40H618	NR	SP7887S	SP7887S
	Ra	LG	15 " x 6 "	4504A - 543	N/A	R40H618	NR	SP7888S	SP7888S
1990									
	Fd	DN		7141 - D224	MD224[340]	69310693	60050153	NR	NR
	Fd	DN		7149 - D236	MD236[341]	69310693	69310782	NR	NR
	Fd	DN		7149 - D236	MD236[341]	69310693	69310782	NR	NR
	Fd	DN		7149 - D236	MD236[341]	69310693	69310782	NR	NR
	Ra	LG	15 " x 5 "	4528A - 542	N/A	R40H618	NR	SP7888S	SP7888S
	Ra	LG	15 " x 5 "	4528A - 546	R40H521	R40H618	NR	NR	NR
	Ra	LG	15 " x 6 "	4504A - 543	N/A	R40H618	NR	NR	NR
	Ra	LG	15 " x 6 "	4504A - 543	N/A	R40H618	NR	SP7887S	SP7887S
	Ra	LG	15 " x 6 "	4504A - 543	N/A	R40H618	NR	SP7888S	SP7888S
	Ra	LG	15 " x 6 "	4504A - 543	N/A	R40H618	NR	NR	NR

9 - 6 Stud, Dayton Rotor, Hat Style
37 - Also available as a New unit
41 - Aluminum piston
42 - 6 Stud, Dayton Rotor, "U" Style
43 - For Applications Taking A Longer Shim, Use R404151706
44 - R44141664 is rotor only, for hub only use E-8396
45 - R44141382 is a hub & rotor, for rotor only use R44141193
46 - R417086 Has 15/16" Bore Size
186 - 10 Stud

MERITOR DRUM OR ROTOR NO.	CALIPER OR CYLINDER BORE SIZE	MERITOR CALIPER OR WHEEL CYLINDER (LEFT)	MERITOR CALIPER OR WHEEL CYLINDER (RIGHT)	MERITOR CALIPER OR WHEEL CYLINDER REPAIR KIT	MERITOR CALIPER PISTON	MERITOR MASTER CYLINDER	MERITOR MASTER CYLINDER KIT	MERITOR BRAKE HOSE (LEFT)	MERITOR BRAKE HOSE (RIGHT)
									FORD(Cont.)
									B800 SERIES: SCHOOL BUS(Cont.)
23-122703-002[186]	2-7/8 "	60050145X	60050145X[37]	60050146	69270702[41]	-	-	R4577461	R4577461
23-122743-002[187]	2-7/8 "	60050145X	60050145X[46]	60050146	69270702[41]	-	-	R4577461	R4577461
23-122700-002[9]	2-1/2 "	R424244X	R424244X[37]	60050266	69270757[41]	-	-	R4577461	R4577461
N/A	1-5/8 "	201181	201182	SP7895S	NR	-	-	R4577870	R4577870
N/A	1-5/8 "	201185	201186[329]	SP7895S	NR	-	-	R4577870	R4577870
N/A	1-3/4 "	201179X	201180X	SP7873S	SP7880S[204]	-	-	R4577870	R4577870
N/A	1-5/8 "	201185	201186[329]	SP7895S	NR	-	-	R4577870	R4577870
N/A	1-5/8 "	201181	201182	SP7895S	NR	-	-	R4577870	R4577870
N/A	1-3/4 "	201183X	201184X[329]	SP7873S	NR	-	-	R4577870	R4577870
23-122703-002[186]	2-7/8 "	60050145X	60050145X[37]	60050146	69270702[41]	-	-	R4577461	R4577461
23-122700-002[9]	2-1/2 "	R424244X	R424244X[37]	60050266	69270757[41]	-	-	R4577461	R4577461
23-122691-002[42]	2-7/8 "	60050145X	60050145X[37]	60050146	69270702[41]	-	-	R4577461	R4577461
23-122743-002[187]	2-7/8 "	60050145X	60050145X[45]	60050146	69270702[41]	-	-	R4577461	R4577461
N/A	1-5/8 "	201181	201182	SP7895S	NR	-	-	R4577870	R4577870
N/A	1-5/8 "	201185	201186[329]	SP7895S	NR	-	-	R4577870	R4577870
N/A	1-5/8 "	201185	201186[329]	SP7895S	NR	-	-	R4577870	R4577870
N/A	1-3/4 "	201179X	201180X	SP7873S	SP7880S[204]	-	-	R4577870	R4577870
N/A	1-3/4 "	201183X	201184X[329]	SP7873S	NR	-	-	R4577870	R4577870
N/A	1-5/8 "	201181	201182	SP7895S	NR	-	-	R4577870	R4577870
23-122743-002[187]	2-7/8 "	60050145X	60050145X[44]	60050146	69270702[41]	-	-	R4577461	R4577461
23-122700-002[9]	2-1/2 "	R424244X	R424244X[37]	60050266	69270757[41]	-	-	R4577461	R4577461
23-122703-002[186]	2-7/8 "	60050145X	60050145X[37]	60050146	69270702[41]	-	-	R4577461	R4577461
23-122691-002[42]	2-7/8 "	60050145X	60050145X[37]	60050146	69270702[41]	-	-	R4577461	R4577461
N/A	1-5/8 "	201181	201182	SP7895S	NR	-	-	R4577870	R4577870
N/A	1-5/8 "	201185	201186[329]	SP7895S	NR	-	-	R4577870	R4577870
N/A	1-5/8 "	201181	201182	SP7895S	NR	-	-	R4577870	R4577870
N/A	1-5/8 "	201185	201186[329]	SP7895S	NR	-	-	R4577870	R4577870
N/A	1-3/4 "	201179X	201180X	SP7873S	SP7880S[204]	-	-	R4577870	R4577870
N/A	1-3/4 "	201183X	201184X[329]	SP7873S	NR	-	-	R4577870	R4577870
23-122700-002[9]	2-1/2 "	R424244X	R424244X[37]	60050266	69270757[41]	-	-	R4577461	R4577461
23-122743-002[187]	2-7/8 "	60050145X	60050145X[43]	60050146	69270702[41]	-	-	R4577461	R4577461
23-122691-002[42]	2-7/8 "	60050145X	60050145X[37]	60050146	69270702[41]	-	-	R4577461	R4577461
23-122703-002[186]	2-7/8 "	60050145X	60050145X[37]	60050146	69270702[41]	-	-	R4577461	R4577461
N/A	1-5/8 "	201181	201182	SP7895S	NR	-	-	R4577870	R4577870
N/A	1-5/8 "	201185	201186[329]	SP7895S	NR	-	-	R4577870	R4577870
N/A	1-3/4 "	201179X	201180X	SP7873S	SP7880S[204]	-	-	R4577870	R4577870
N/A	1-5/8 "	201185	201186[329]	SP7895S	NR	-	-	R4577870	R4577870
N/A	1-5/8 "	201181	201182	SP7895S	NR	-	-	R4577870	R4577870
N/A	1-3/4 "	201183X	201184X[329]	SP7873S	NR	-	-	R4577870	R4577870
23-122700-002[9]	2-1/2 "	R424244X	R424244X[37]	60050266	69270757[41]	-	-	R4577461	R4577461
23-122691-002[42]	2-7/8 "	60050145X	60050145X[37]	60050146	69270702[41]	-	-	R4577461	R4577461
23-122703-002[186]	2-7/8 "	60050145X	60050145X[37]	60050146	69270702[41]	-	-	R4577461	R4577461
23-122743-002[187]	2-7/8 "	60050145X	60050145X[42]	60050146	69270702[41]	-	-	R4577461	R4577461
N/A	1-5/8 "	201185	201186[329]	SP7895S	NR	-	-	R4577870	R4577870
N/A	1-5/8 "	201181	201182	SP7895S	NR	-	-	R4577870	R4577870
N/A	1-3/4 "	201179X	201180X	SP7873S	SP7880S[204]	-	-	R4577870	R4577870
N/A	1-5/8 "	201181	201182	SP7895S	NR	-	-	R4577870	R4577870
N/A	1-3/4 "	201183X	201184X[329]	SP7873S	NR	-	-	R4577870	R4577870
N/A	1-5/8 "	201185	201186[329]	SP7895S	NR	-	-	R4577870	R4577870
23-122700-002[9]	2-1/2 "	R424244X	R424244X[37]	60050266	69270757[41]	-	-	R4577461	R4577461
23-122743-002[187]	2-7/8 "	60050145X	60050145X[41]	60050146	69270702[41]	-	-	R4577461	R4577461
23-122703-002[186]	2-7/8 "	60050145X	60050145X[37]	60050146	69270702[41]	-	-	R4577461	R4577461
23-122691-002[42]	2-7/8 "	60050145X	60050145X[37]	60050146	69270702[41]	-	-	R4577461	R4577461
N/A	1-5/8 "	201185	201186[329]	SP7895S	NR	-	-	R4577870	R4577870
N/A	1-5/8 "	201181	201182	SP7895S	NR	-	-	R4577870	R4577870
N/A	1-3/4 "	201179X	201180X	SP7873S	SP7880S[204]	-	-	R4577870	R4577870
N/A	1-3/4 "	201183X	201184X[329]	SP7873S	NR	-	-	R4577870	R4577870
N/A	1-5/8 "	201185	201186[329]	SP7895S	NR	-	-	R4577870	R4577870
N/A	1-5/8 "	201181	201182	SP7895S	NR	-	-	R4577870	R4577870

187 - 6 Stud, 6.443" Hub
204 - Right Hand; use E-4057 for Left Hand Expander Kits
329 - Forward
340 - Use 69160457 for Disc Pad Retainer Clip
341 - Use 69160445 for Disc Pad Retainer Clip

MAKE MODEL YEAR AXLE CODE AXLE WEIGHT	AXLE & BRK. TYPE	BRK. MFG.	BRAKE SIZE	FMSI	MERITOR DISC PAD OR BRAKE SHOE	MERITOR GUIDE PIN OR RETURN SPRING KIT	MERITOR CALIPER HWD. KIT OR RETURN SPRING KIT	MERITOR ADJUSTER KIT (LEFT WHEEL)	MERITOR ADJUSTER KIT (RIGHT WHEEL)
FORD(Cont.)									
B800 SERIES: SCHOOL BUS(Cont.)									
1989									
	Fd	DN		7149 - D236	MD236[341]	69310693	69310782[43]	NR	NR
	Fd	DN		7149 - D236	MD236[341]	69310693	69310782[43]	NR	NR
	Fd	DN		7149 - D236	MD236[341]	69310693	69310782[43]	NR	NR
	Fd	DN		7141 - D224	MD224[340]	69310693	60050153	NR	NR
	Ra	LG	15 " x 5 "	4528A - 542	N/A	R40H618	NR	SP7888S	SP7888S
	Ra	LG	15 " x 5 "	4528A - 545	R40H500	R40H618	NR	NR	NR
	Ra	LG	15 " x 6 "	4504A - 543	N/A	R40H618	NR	NR	NR
	Ra	LG	15 " x 6 "	4504A - 543	N/A	R40H618	NR	SP7887S	SP7887S
	Ra	LG	15 " x 6 "	4504A - 543	N/A	R40H618	NR	SP7888S	SP7888S
	Ra	LG	15 " x 6 "	4504A - 543	N/A	R40H618	NR	NR	NR
1988									
	Fd	DN		7149 - D236	MD236[341]	69310693	69310782[43]	NR	NR
	Fd	DN		7149 - D236	MD236[341]	69310693	69310782[43]	NR	NR
	Fd	DN		7141 - D224	MD224[340]	69310693	60050153	NR	NR
	Fd	DN		7149 - D236	MD236[341]	69310693	69310782[43]	NR	NR
	Ra	LG	15 " x 5 "	4528A - 544	N/A	R40H618	NR	NR	NR
	Ra	LG	15 " x 5 "	4528A - 542	N/A	R40H618	NR	SP7888S	SP7888S
	Ra	LG	15 " x 6 "	4504A - 543	N/A	R40H618	NR	SP7888S	SP7888S
	Ra	LG	15 " x 6 "	4504A - 543	N/A	R40H618	NR	NR	NR
	Ra	LG	15 " x 6 "	4504A - 543	N/A	R40H618	NR	NR	NR
	Ra	LG	15 " x 6 "	4504A - 543	N/A	R40H618	NR	SP7887S	SP7887S
1987									
	Fd	DN		7149 - D236	MD236[341]	69310693	69310782[43]	NR	NR
	Fd	DN		7149 - D236	MD236[341]	69310693	69310782[43]	NR	NR
	Fd	DN		7149 - D236	MD236[341]	69310693	69310782[43]	NR	NR
	Fd	DN		7141 - D224	MD224[340]	69310693	60050153	NR	NR
	Ra	LG	15 " x 5 "	4528A - 542	N/A	R40H618	NR	SP7888S	SP7888S
	Ra	LG	15 " x 6 "	4504A - 543	N/A	R40H618	NR	NR	NR
	Ra	LG	15 " x 6 "	4504A - 543	N/A	R40H618	NR	SP7888S	SP7888S
	Ra	LG	15 " x 6 "	4504A - 543	N/A	R40H618	NR	NR	NR
	Ra	LG	15 " x 6 "	4504A - 543	N/A	R40H618	NR	SP7887S	SP7887S
	Ra	LG	15 " x 6 "	4504A - 543	N/A	R40H618	NR	NR	NR
1986									
	Fd	DN		7141 - D224	MD224[340]	69310693	60050153	NR	NR
	Fd	DN		7149 - D236	MD236[341]	69310693	69310782	NR	NR
	Fd	DN		7149 - D236	MD236[341]	69310693	69310782	NR	NR
	Fd	DN		7149 - D236	MD236[341]	69310693	69310782	NR	NR
	Ra	LG	15 " x 5 "	4528A - 542	N/A	R40H618	NR	SP7888S	SP7888S
	Ra	LG	15 " x 5 "	4528A - 542	N/A	R40H618	NR	NR	NR
	Ra	LG	15 " x 6 "	4504A - 543	N/A	R40H618	NR	SP7888S	SP7888S
	Ra	LG	15 " x 6 "	4504A - 543	N/A	R40H618	NR	NR	NR
	Ra	LG	15 " x 6 "	4504A - 543	N/A	R40H618	NR	SP7887S	SP7887S
	Ra	LG	15 " x 6 "	4504A - 543	N/A	R40H618	NR	NR	NR
1985									
	Fd	DN		7141 - D224	MD224[340]	69310693	60050153	NR	NR
	Ra	LG	15 " x 5 "	4528A - 542	N/A	R40H618	NR	SP7888S	SP7888S
	Ra	LG	15 " x 5 "	4528A - 542	N/A	R40H618	NR	NR	NR
	Ra	LG	15 " x 6 "	4504A - 543	N/A	R40H618	NR	SP7887S	SP7887S
	Ra	LG	15 " x 6 "	4504A - 543	N/A	R40H618	NR	NR	NR
	Ra	LG	15 " x 6 "	4504A - 543	N/A	R40H618	NR	NR	NR
	Ra	LG	15 " x 6 "	4504A - 543	N/A	R40H618	NR	SP7888S	SP7888S
R130	Ra	KH	15 " x 4 "	4647 - 401	R700401	R40H595	R40H9220	R40H3538	R40H3539
1984									
	Fd	DN		7141 - D224	MD224[340]	69310693	60050153	NR	NR
	Ra	LG	15 " x 5 "	4528A - 542	N/A	R40H618	NR	NR	NR
	Ra	LG	15 " x 5 "	4528A - 542	N/A	R40H618	NR	SP7888S	SP7888S
	Ra	LG	15 " x 6 "	4504A - 543	N/A	R40H618	NR	SP7887S	SP7887S
	Ra	LG	15 " x 6 "	4504A - 543	N/A	R40H618	NR	NR	NR
	Ra	LG	15 " x 6 "	4504A - 543	N/A	R40H618	NR	NR	NR
	Ra	LG	15 " x 6 "	4504A - 543	N/A	R40H618	NR	SP7888S	SP7888S
R130	Ra	KH	15 " x 4 "	4647 - 401	R700401	R40H595	R40H9220	R40H3538	R40H3539
C600 SERIES: TILT CAB									
1990									
	Ra	LG	15 " x 5 "	4528A - 542	N/A	R40H618	NR	NR	NR

9 - 6 Stud, Dayton Rotor, Hat Style
37 - Also available as a New unit
38 - First design, may have external joining tube and uses steel pistons
39 - First design, uses steel pistons.
40 - For chrome plated steel version, use R4090070P
41 - Aluminum piston
42 - 6 Stud, Dayton Rotor, "U" Style
43 - For Applications Taking A Longer Shim, Use R404151706
186 - 10 Stud

MERITOR DRUM OR ROTOR NO.	CALIPER OR CYLINDER BORE SIZE	MERITOR CALIPER OR WHEEL CYLINDER (LEFT)	MERITOR CALIPER OR WHEEL CYLINDER (RIGHT)	MERITOR CALIPER OR WHEEL CYLINDER REPAIR KIT	MERITOR CALIPER PISTON	MERITOR MASTER CYLINDER	MERITOR MASTER CYLINDER KIT	MERITOR BRAKE HOSE (LEFT)	MERITOR BRAKE HOSE (RIGHT)
FORD(Cont.)									
B800 SERIES: SCHOOL BUS(Cont.)									
23-122743-002[187]	2-7/8 "	60050145X	60050145X[40]	60050146	69270702[41]	-	-	R4577461	R4577461
23-122703-002[186]	2-7/8 "	60050145X	60050145X[37]	60050146	69270702[41]	-	-	R4577461	R4577461
23-122691-002[42]	2-7/8 "	60050145X	60050145X[37]	60050146	69270702[41]	-	-	R4577461	R4577461
23-122700-002[9]	2-1/2 "	R424244X	R424244X[37]	60050266	69270757[41]	-	-	R4577461	R4577461
N/A	1-5/8 "	201185	201186[329]	SP7895S	NR	-	-	N/A	N/A
N/A	1-5/8 "	201181	201182	SP7895S	NR	-	-	N/A	N/A
N/A	1-3/4 "	201179X	201180X	SP7873S	SP7880S[204]	-	-	N/A	N/A
N/A	1-3/4 "	201183X	201184X[329]	SP7873S	NR	-	-	N/A	N/A
N/A	1-5/8 "	201185	201186[329]	SP7895S	NR	-	-	N/A	N/A
N/A	1-5/8 "	201181	201182	SP7895S	NR	-	-	N/A	N/A
23-122743-002[187]	2-7/8 "	60050145X	60050145X[39]	60050146	69270702[41]	-	-	R4577461	R4577461
23-122703-002[186]	2-7/8 "	60050145X	60050145X[37]	60050146	69270702[41]	-	-	R4577461	R4577461
23-122700-002[9]	2-1/2 "	R424244X	R424244X[37]	60050266	69270757[41]	-	-	R4577461	R4577461
23-122691-002[42]	2-7/8 "	60050145X	60050145X[37]	60050146	69270702[41]	-	-	R4577461	R4577461
N/A	1-5/8 "	201181	201182	SP7895S	NR	-	-	N/A	N/A
N/A	1-5/8 "	201185	201186[329]	SP7895S	NR	-	-	N/A	N/A
N/A	1-5/8 "	201185	201186[329]	SP7895S	NR	-	-	N/A	N/A
N/A	1-3/4 "	201179X	201180X	SP7873S	SP7880S[204]	-	-	N/A	N/A
N/A	1-5/8 "	201181	201182	SP7895S	NR	-	-	N/A	N/A
N/A	1-3/4 "	201183X	201184X[329]	SP7873S	NR	-	-	N/A	N/A
23-122691-002[42]	2-7/8 "	60050145X	60050145X[37]	60050146	69270702[41]	-	-	R4577461	R4577461
23-122743-002[187]	2-7/8 "	60050145X	60050145X[38]	60050146	69270702[41]	-	-	R4577461	R4577461
23-122703-002[186]	2-7/8 "	60050145X	60050145X[37]	60050146	69270702[41]	-	-	R4577461	R4577461
23-122700-002[9]	2-1/2 "	R424244X	R424244X[37]	60050266	69270757[41]	-	-	R4577461	R4577461
N/A	1-5/8 "	201185	201186[329]	SP7895S	NR	-	-	N/A	N/A
N/A	1-5/8 "	201181	201182	SP7895S	NR	-	-	N/A	N/A
N/A	1-5/8 "	201185	201186[329]	SP7895S	NR	-	-	N/A	N/A
N/A	1-5/8 "	201181	201182	SP7895S	NR	-	-	N/A	N/A
N/A	1-3/4 "	201183X	201184X[329]	SP7873S	NR	-	-	N/A	N/A
N/A	1-3/4 "	201179X	201180X	SP7873S	SP7880S[204]	-	-	N/A	N/A
23-122700-002[9]	2-1/2 "	R424244X	R424244X[37]	60050266	69270757[41]	-	-	R4577461	R4577461
23-122703-002[186]	2-7/8 "	60050145X	60050145X[37]	60050146	69270702[41]	-	-	R4577461	R4577461
23-122743-002[187]	2-7/8 "	60050145X	60050145X[37]	60050146	69270702[41]	-	-	R4577461	R4577461
23-122691-002[42]	2-7/8 "	60050145X	60050145X[37]	60050146	69270702[41]	-	-	R4577461	R4577461
N/A	1-5/8 "	201185	201186[329]	SP7895S	NR	-	-	N/A	N/A
N/A	1-5/8 "	201181	201182	SP7895S	NR	-	-	N/A	N/A
N/A	1-5/8 "	201185	201186[329]	SP7895S	NR	-	-	N/A	N/A
N/A	1-5/8 "	201181	201182	SP7895S	NR	-	-	N/A	N/A
N/A	1-3/4 "	201183X	201184X[329]	SP7873S	NR	-	-	N/A	N/A
N/A	1-3/4 "	201179X	201180X	SP7873S	SP7880S[204]	-	-	N/A	N/A
23-122700-002[9]	2-1/2 "	R424244X	R424244X[37]	60050266	69270757[41]	-	-	R4577461	R4577461
N/A	1-5/8 "	201185	201186[329]	SP7895S	NR	-	-	N/A	N/A
N/A	1-5/8 "	201181	201182	SP7895S	NR	-	-	N/A	N/A
N/A	1-3/4 "	201183X	201184X[329]	SP7873S	NR	-	-	N/A	N/A
N/A	1-5/8 "	201181	201182	SP7895S	NR	-	-	N/A	N/A
N/A	1-3/4 "	201179X	201180X	SP7873S	SP7880S[204]	-	-	N/A	N/A
N/A	1-5/8 "	201185	201186[329]	SP7895S	NR	-	-	N/A	N/A
N/A	1-1/2 "	R4033607	R4033607	R4166818	NR	-	-	-	-
23-122700-002[9]	2-1/2 "	R424244X	R424244X[37]	60050266	69270757[41]	-	-	R4577461	R4577461
N/A	1-5/8 "	201181	201182	SP7895S	NR	-	-	N/A	N/A
N/A	1-5/8 "	201185	201186[329]	SP7895S	NR	-	-	N/A	N/A
N/A	1-3/4 "	201183X	201184X[329]	SP7873S	NR	-	-	N/A	N/A
N/A	1-3/4 "	201179X	201180X	SP7873S	SP7880S[204]	-	-	N/A	N/A
N/A	1-5/8 "	201181	201182	SP7895S	NR	-	-	N/A	N/A
N/A	1-5/8 "	201185	201186[329]	SP7895S	NR	-	-	N/A	N/A
N/A	1-1/2 "	R4033607	R4033607	R4166818	NR	-	-	-	-
C600 SERIES: TILT CAB									
N/A	1-5/8 "	201181	201182	SP7895S	NR	-	-	R4577870	R4577870

187 - 6 Stud, 6.443" Hub
204 - Right Hand; use E-4057 for Left Hand Expander Kits
329 - Forward
340 - Use 69160457 for Disc Pad Retainer Clip
341 - Use 69160445 for Disc Pad Retainer Clip

MAKE MODEL YEAR AXLE CODE AXLE WEIGHT	AXLE & BRK. TYPE	BRK. MFG.	BRAKE SIZE	FMSI	MERITOR DISC PAD OR BRAKE SHOE	MERITOR GUIDE PIN OR RETURN SPRING KIT	MERITOR CALIPER HWD. KIT OR RETURN SPRING KIT	MERITOR ADJUSTER KIT (LEFT WHEEL)	MERITOR ADJUSTER KIT (RIGHT WHEEL)
FORD(Cont.)									
C600 SERIES: TILT CAB(Cont.)									
1990									
	Ra	LG	15 " x 5 "	4528A - 542	N/A	R40H618	NR	SP7888S	SP7888S
	Ra	LG	15 " x 6 "	4504A - 543	N/A	R40H618	NR	SP7887S	SP7887S
	Ra	LG	15 " x 6 "	4504A - 543	N/A	R40H618	NR	NR	NR
F070	Fd	DN		7141 - D224	MD224[340]	69310693	60050153	NR	NR
8,000 and above	Fd	DN		7141 - D224	MD224[340]	69310693	60050153	NR	NR
1989									
	Ra	LG	15 " x 5 "	4528A - 542	N/A	R40H618	NR	SP7888S	SP7888S
	Ra	LG	15 " x 5 "	4528A - 542	N/A	R40H618	NR	NR	NR
	Ra	LG	15 " x 6 "	4504A - 543	N/A	R40H618	NR	SP7887S	SP7887S
	Ra	LG	15 " x 6 "	4504A - 543	N/A	R40H618	NR	NR	NR
F070	Fd	DN		7141 - D224	MD224[340]	69310693	60050153	NR	NR
8,000 and above	Fd	DN		7141 - D224	MD224[340]	69310693	60050153	NR	NR
1988									
	Fd	DN		7141 - D224	MD224[340]	69310693	60050153	NR	NR
	Ra	LG	15 " x 5 "	4528A - 542	N/A	R40H618	NR	NR	NR
	Ra	LG	15 " x 5 "	4528A - 542	N/A	R40H618	NR	SP7888S	SP7888S
	Ra	LG	15 " x 6 "	4504A - 543	N/A	R40H618	NR	SP7887S	SP7887S
	Ra	LG	15 " x 6 "	4504A - 543	N/A	R40H618	NR	NR	NR
F070	Fd	DN		7141 - D224	MD224[340]	69310693	60050153	NR	NR
1987									
	Fd	DN		7141 - D224	MD224[340]	69310693	60050153	NR	NR
	Ra	LG	15 " x 5 "	4528A - 542	N/A	R40H618	NR	SP7888S	SP7888S
	Ra	LG	15 " x 5 "	4528A - 542	N/A	R40H618	NR	NR	NR
	Ra	LG	15 " x 6 "	4504A - 543	N/A	R40H618	NR	SP7887S	SP7887S
	Ra	LG	15 " x 6 "	4504A - 543	N/A	R40H618	NR	NR	NR
1986									
	Fd	DN		7141 - D224	MD224[340]	69310693	60050153	NR	NR
	Ra	LG	15 " x 5 "	4528A - 542	N/A	R40H618	NR	SP7888S	SP7888S
	Ra	LG	15 " x 5 "	4528A - 542	N/A	R40H618	NR	NR	NR
	Ra	LG	15 " x 6 "	4504A - 543	N/A	R40H618	NR	NR	NR
	Ra	LG	15 " x 6 "	4504A - 543	N/A	R40H618	NR	SP7887S	SP7887S
1985									
	Ra	LG	15 " x 5 "	4528A - 542	N/A	R40H618	NR	NR	NR
	Ra	LG	15 " x 5 "	4528A - 542	N/A	R40H618	NR	SP7888S	SP7888S
	Ra	LG	15 " x 6 "	4504A - 543	N/A	R40H618	NR	NR	NR
	Ra	LG	15 " x 6 "	4504A - 543	N/A	R40H618	NR	SP7887S	SP7887S
F070	Fd	DN		7141 - D224	MD224[340]	69310693	60050153	NR	NR
8,000 and above	Fd	DN		7141 - D224	MD224[340]	69310693	60050153	NR	NR
1984									
	Ra	LG	15 " x 5 "	4528A - 542	N/A	R40H618	NR	SP7888S	SP7888S
	Ra	LG	15 " x 5 "	4528A - 542	N/A	R40H618	NR	NR	NR
	Ra	LG	15 " x 6 "	4504A - 543	N/A	R40H618	NR	SP7887S	SP7887S
	Ra	LG	15 " x 6 "	4504A - 543	N/A	R40H618	NR	NR	NR
F070	Fd	DN		7141 - D224	MD224[340]	69310693	60050153	NR	NR
8,000 and above	Fd	DN		7141 - D224	MD224[340]	69310693	60050153	NR	NR
C700 SERIES: TILT CAB									
1990									
	Fd	DN		7141 - D224	MD224[340]	69310693	60050153	NR	NR
	Fd	DN		7149 - D236	MD236[341]	69310693	69310782	NR	NR
	Fd	DN		7149 - D236	MD236[341]	69310693	69310782	NR	NR
	Fd	DN		7149 - D236	MD236[341]	69310693	69310782	NR	NR
	Ra	LG	15 " x 5 "	4528A - 542	N/A	R40H618	NR	NR	NR
	Ra	LG	15 " x 5 "	4528A - 542	N/A	R40H618	NR	SP7888S	SP7888S
	Ra	LG	15 " x 6 "	4504A - 543	N/A	R40H618	NR	NR	NR
	Ra	LG	15 " x 6 "	4504A - 543	N/A	R40H618	NR	SP7887S	SP7887S
	Ra	LG	15 " x 7 "	4505A - 544	N/A	R40H618	NR	SP7887S	SP7887S
	Ra	LG	15 " x 7 "	4505A - 544	N/A	R40H618	NR	NR	NR
1989									
	Fd	DN		7149 - D236	MD236[341]	69310693	69310782[43]	NR	NR
	Fd	DN		7149 - D236	MD236[341]	69310693	69310782[43]	NR	NR
	Fd	DN		7149 - D236	MD236[341]	69310693	69310782[43]	NR	NR
	Fd	DN		7149 - D236	MD236[341]	69310693	69310782[43]	NR	NR
	Fd	DN		7149 - D236	MD236[341]	69310693	69310782[43]	NR	NR

9 - 6 Stud, Dayton Rotor, Hat Style
42 - 6 Stud, Dayton Rotor, "U" Style
186 - 10 Stud
37 - Also available as a New unit
43 - For Applications Taking A Longer Shim, Use R404151706
187 - 6 Stud, 6.443" Hub
41 - Aluminum piston
53 - Power Brakes
204 - Right Hand; use E-4057 for Left Hand Expander Kits

MERITOR DRUM OR ROTOR NO.	CALIPER OR CYLINDER BORE SIZE	MERITOR CALIPER OR WHEEL CYLINDER (LEFT)	MERITOR CALIPER OR WHEEL CYLINDER (RIGHT)	MERITOR CALIPER OR WHEEL CYLINDER REPAIR KIT	MERITOR CALIPER PISTON	MERITOR MASTER CYLINDER	MERITOR MASTER CYLINDER KIT	MERITOR BRAKE HOSE (LEFT)	MERITOR BRAKE HOSE (RIGHT)
									FORD(Cont.)
									C600 SERIES: TILT CAB(Cont.)
N/A	1-5/8 "	201185	201186[329]	SP7895S	NR	-	-	R4577870	R4577870
N/A	1-3/4 "	201183X	201184X[329]	SP7873S	NR	-	-	R4577870	R4577870
N/A	1-3/4 "	201179X	201180X	SP7873S	SP7880S[204]	-	-	R4577870	R4577870
23-122700-002[9]	2-1/2 "	R424244X	R424244X[37]	60050266	69270757[41]	R4111995[53]	-	R4577461	R4577461
23-122700-002[9]	2-1/2 "	R424244X	R424244X[37]	60050266	69270757[41]	R4111999[53]	R4122386	R4577461	R4577461
N/A	1-5/8 "	201185	201186[329]	SP7895S	NR	-	-	N/A	N/A
N/A	1-5/8 "	201181	201182	SP7895S	NR	-	-	N/A	N/A
N/A	1-3/4 "	201183X	201184X[329]	SP7873S	NR	-	-	N/A	N/A
N/A	1-3/4 "	201179X	201180X	SP7873S	SP7880S[204]	-	-	N/A	N/A
23-122700-002[9]	2-1/2 "	R424244X	R424244X[37]	60050266	69270757[41]	R4111995[53]	-	R4577461	R4577461
23-122700-002[9]	2-1/2 "	R424244X	R424244X[37]	60050266	69270757[41]	R4111999[53]	R4122386	R4577461	R4577461
23-122700-002[9]	2-1/2 "	R424244X	R424244X[37]	60050266	69270757[41]	-	-	R4577870	R4577870
N/A	1-5/8 "	201181	201182	SP7895S	NR	-	-	N/A	N/A
N/A	1-5/8 "	201185	201186[329]	SP7895S	NR	-	-	N/A	N/A
N/A	1-3/4 "	201183X	201184X[329]	SP7873S	NR	-	-	N/A	N/A
N/A	1-3/4 "	201179X	201180X	SP7873S	SP7880S[204]	-	-	N/A	N/A
23-122700-002[9]	2-1/2 "	R424244X	R424244X[37]	60050266	69270757[41]	R4111995[53]	-	R4577461	R4577461
23-122700-002[9]	2-1/2 "	R424244X	R424244X[37]	60050266	69270757[41]	-	-	-	-
N/A	1-5/8 "	201185	201186[329]	SP7895S	NR	-	-	N/A	N/A
N/A	1-5/8 "	201181	201182	SP7895S	NR	-	-	N/A	N/A
N/A	1-3/4 "	201183X	201184X[329]	SP7873S	NR	-	-	N/A	N/A
N/A	1-3/4 "	201179X	201180X	SP7873S	SP7880S[204]	-	-	N/A	N/A
23-122700-002[9]	2-1/2 "	R424244X	R424244X[37]	60050266	69270757[41]	-	-	-	-
N/A	1-5/8 "	201185	201186[329]	SP7895S	NR	-	-	N/A	N/A
N/A	1-5/8 "	201181	201182	SP7895S	NR	-	-	N/A	N/A
N/A	1-3/4 "	201179X	201180X	SP7873S	SP7880S[204]	-	-	N/A	N/A
N/A	1-3/4 "	201183X	201184X[329]	SP7873S	NR	-	-	N/A	N/A
N/A	1-5/8 "	201181	201182	SP7895S	NR	-	-	N/A	N/A
N/A	1-5/8 "	201185	201186[329]	SP7895S	NR	-	-	N/A	N/A
N/A	1-3/4 "	201179X	201180X	SP7873S	SP7880S[204]	-	-	N/A	N/A
N/A	1-3/4 "	201183X	201184X[329]	SP7873S	NR	-	-	N/A	N/A
23-122700-002[9]	2-1/2 "	R424244X	R424244X[37]	60050266	69270757[41]	R4111995[53]	-	R4577461	R4577461
23-122700-002[9]	2-1/2 "	R424244X	R424244X[37]	60050266	69270757[41]	R4111999[53]	R4122386	R4577461	R4577461
N/A	1-5/8 "	201185	201186[329]	SP7895S	NR	-	-	N/A	N/A
N/A	1-5/8 "	201181	201182	SP7895S	NR	-	-	N/A	N/A
N/A	1-3/4 "	201183X	201184X[329]	SP7873S	NR	-	-	N/A	N/A
N/A	1-3/4 "	201179X	201180X	SP7873S	SP7880S[204]	-	-	N/A	N/A
23-122700-002[9]	2-1/2 "	R424244X	R424244X[37]	60050266	69270757[41]	R4111995[53]	-	R4577461	R4577461
23-122700-002[9]	2-1/2 "	R424244X	R424244X[37]	60050266	69270757[41]	R4111999[53]	R4122386	R4577461	R4577461
									C700 SERIES: TILT CAB
23-122700-002[9]	2-1/2 "	R424244X	R424244X[37]	60050266	69270757[41]	-	-	R4577461	R4577461
23-122743-002[187]	2-7/8 "	60050145X	60050145X[37]	60050146	69270702[41]	-	-	R4577461	R4577461
23-122691-002[42]	2-7/8 "	60050145X	60050145X[37]	60050146	69270702[41]	-	-	R4577461	R4577461
23-122703-002[186]	2-7/8 "	60050145X	60050145X[37]	60050146	69270702[41]	-	-	R4577461	R4577461
N/A	1-5/8 "	201181	201182	SP7895S	NR	-	-	R4577870	R4577870
N/A	1-5/8 "	201185	201186[329]	SP7895S	NR	-	-	R4577870	R4577870
N/A	1-3/4 "	201179X	201180X	SP7873S	SP7880S[204]	-	-	R4577870	R4577870
N/A	1-3/4 "	201183X	201184X[329]	SP7873S	NR	-	-	R4577870	R4577870
N/A	1-3/4 "	201183X	201184X[329]	SP7873S	NR	-	-	R4577870	R4577870
N/A	1-3/4 "	201179X	201180X	SP7873S	SP7880S[204]	-	-	R4577870	R4577870
23-122743-002[187]	2-7/8 "	60050145X	60050145X[37]	60050146	69270702[41]	R4111995[53]	-	R4577461	R4577461
23-122743-002[187]	2-7/8 "	60050145X	60050145X[37]	60050146	69270702[41]	R4111999[53]	R4122386	R4577461	R4577461
23-122703-002[186]	2-7/8 "	60050145X	60050145X[37]	60050146	69270702[41]	R4111999[53]	R4122386	R4577461	R4577461
23-122703-002[186]	2-7/8 "	60050145X	60050145X[37]	60050146	69270702[41]	R4111995[53]	-	R4577461	R4577461
23-122691-002[42]	2-7/8 "	60050145X	60050145X[37]	60050146	69270702[41]	R4111999[53]	R4122386	R4577461	R4577461

329 - Forward

340 - Use 69160457 for Disc Pad Retainer Clip

341 - Use 69160445 for Disc Pad Retainer Clip

MAKE MODEL YEAR AXLE CODE AXLE WEIGHT	AXLE & BRK. TYPE	BRK. MFG.	BRAKE SIZE	FMSI	MERITOR DISC PAD OR BRAKE SHOE	MERITOR GUIDE PIN OR RETURN SPRING KIT	MERITOR CALIPER HWD. KIT OR RETURN SPRING KIT	MERITOR ADJUSTER KIT (LEFT WHEEL)	MERITOR ADJUSTER KIT (RIGHT WHEEL)
FORD(Cont.)									
C700 SERIES: TILT CAB(Cont.)									
1989									
	Fd	DN		7149 - D236	MD236[341]	69310693	69310782[43]	NR	NR
	Fd	DN		7141 - D224	MD224[340]	69310693	60050153	NR	NR
	Fd	DN		7141 - D224	MD224[340]	69310693	60050153	NR	NR
	Ra	LG	15 " x 5 "	4528A - 542	N/A	R40H618	NR	NR	NR
	Ra	LG	15 " x 5 "	4528A - 542	N/A	R40H618	NR	SP7888S	SP7888S
	Ra	LG	15 " x 6 "	4504A - 543	N/A	R40H618	NR	SP7887S	SP7887S
	Ra	LG	15 " x 6 "	4504A - 543	N/A	R40H618	NR	NR	NR
	Ra	LG	15 " x 7 "	4505A - 544	N/A	R40H618	NR	SP7887S	SP7887S
	Ra	LG	15 " x 7 "	4505A - 544	N/A	R40H618	NR	NR	NR
1988									
	Fd	DN		7141 - D224	MD224[340]	69310693	60050153	NR	NR
	Fd	DN		7149 - D236	MD236[341]	69310693	69310782[43]	NR	NR
	Fd	DN		7149 - D236	MD236[341]	69310693	69310782[43]	NR	NR
	Fd	DN		7149 - D236	MD236[341]	69310693	69310782[43]	NR	NR
	Fd	DN		7149 - D236	MD236[341]	69310693	69310782[43]	NR	NR
	Fd	DN		7141 - D224	MD224[340]	69310693	60050153	NR	NR
	Fd	DN		7149 - D236	MD236[341]	69310693	69310782[43]	NR	NR
	Fd	DN		7149 - D236	MD236[341]	69310693	69310782[43]	NR	NR
	Ra	LG	15 " x 5 "	4528A - 542	N/A	R40H618	NR	NR	NR
	Ra	LG	15 " x 5 "	4528A - 542	N/A	R40H618	NR	SP7888S	SP7888S
	Ra	LG	15 " x 6 "	4504A - 543	N/A	R40H618	NR	NR	NR
	Ra	LG	15 " x 6 "	4504A - 543	N/A	R40H618	NR	SP7887S	SP7887S
	Ra	LG	15 " x 7 "	4505A - 544	N/A	R40H618	NR	SP7887S	SP7887S
	Ra	LG	15 " x 7 "	4505A - 544	N/A	R40H618	NR	NR	NR
1987									
	Fd	DN		7149 - D236	MD236[341]	69310693	69310782[43]	NR	NR
	Fd	DN		7149 - D236	MD236[341]	69310693	69310782[43]	NR	NR
	Fd	DN		7141 - D224	MD224[340]	69310693	60050153	NR	NR
	Fd	DN		7141 - D224	MD224[340]	69310693	60050153	NR	NR
	Fd	DN		7149 - D236	MD236[341]	69310693	69310782[43]	NR	NR
	Fd	DN		7149 - D236	MD236[341]	69310693	69310782[43]	NR	NR
	Fd	DN		7149 - D236	MD236[341]	69310693	69310782[43]	NR	NR
	Fd	DN		7149 - D236	MD236[341]	69310693	69310782[43]	NR	NR
	Ra	LG	15 " x 5 "	4528A - 542	N/A	R40H618	NR	SP7888S	SP7888S
	Ra	LG	15 " x 5 "	4528A - 542	N/A	R40H618	NR	NR	NR
	Ra	LG	15 " x 6 "	4504A - 543	N/A	R40H618	NR	SP7887S	SP7887S
	Ra	LG	15 " x 6 "	4504A - 543	N/A	R40H618	NR	NR	NR
	Ra	LG	15 " x 7 "	4505A - 544	N/A	R40H618	NR	SP7887S	SP7887S
	Ra	LG	15 " x 7 "	4505A - 544	N/A	R40H618	NR	NR	NR
1986									
	Fd	DN		7149 - D236	MD236[341]	69310693	69310782	NR	NR
	Fd	DN		7149 - D236	MD236[341]	69310693	69310782	NR	NR
	Fd	DN		7149 - D236	MD236[341]	69310693	69310782	NR	NR
	Fd	DN		7141 - D224	MD224[340]	69310693	60050153	NR	NR
	Fd	DN		7149 - D236	MD236[341]	69310693	69310782	NR	NR
	Fd	DN		7149 - D236	MD236[341]	69310693	69310782	NR	NR
	Fd	DN		7141 - D224	MD224[340]	69310693	60050153	NR	NR
	Fd	DN		7149 - D236	MD236[341]	69310693	69310782	NR	NR
	Ra	LG	15 " x 5 "	4528A - 542	N/A	R40H618	NR	NR	NR
	Ra	LG	15 " x 5 "	4528A - 542	N/A	R40H618	NR	SP7888S	SP7888S
	Ra	LG	15 " x 6 "	4504A - 543	N/A	R40H618	NR	NR	NR
	Ra	LG	15 " x 6 "	4504A - 543	N/A	R40H618	NR	SP7887S	SP7887S
	Ra	LG	15 " x 7 "	4505A - 544	N/A	R40H618	NR	SP7887S	SP7887S
	Ra	LG	15 " x 7 "	4505A - 544	N/A	R40H618	NR	NR	NR
1985									
	Fd	DN		7149 - D236	MD236[341]	69310693	R40H5523	NR	NR
	Fd	DN		7149 - D236	MD236[341]	69310693	R40H5523	NR	NR
	Fd	DN		7149 - D236	MD236[341]	69310693	R40H5523	NR	NR
	Fd	DN		7149 - D236	MD236[341]	69310693	R40H5523	NR	NR
	Fd	DN		7149 - D236	MD236[341]	69310693	R40H5523	NR	NR
	Fd	DN		7141 - D224	MD224[340]	69310693	60050153	NR	NR
	Fd	DN		7141 - D224	MD224[340]	69310693	60050153	NR	NR
	Fd	DN		7149 - D236	MD236[341]	69310693	R40H5523	NR	NR
	Ra	LG	15 " x 5 "	4528A - 542	N/A	R40H618	NR	SP7888S	SP7888S

9 - 6 Stud, Dayton Rotor, Hat Style
42 - 6 Stud, Dayton Rotor, "U" Style
186 - 10 Stud
37 - Also available as a New unit
43 - For Applications Taking A Longer Shim, Use R404151706
187 - 6 Stud, 6.443" Hub
41 - Aluminum piston
53 - Power Brakes
204 - Right Hand; use E-4057 for Left Hand Expander Kits

MERITOR DRUM OR ROTOR NO.	CALIPER OR CYLINDER BORE SIZE	MERITOR CALIPER OR WHEEL CYLINDER (LEFT)	MERITOR CALIPER OR WHEEL CYLINDER (RIGHT)	MERITOR CALIPER OR WHEEL CYLINDER REPAIR KIT	MERITOR CALIPER PISTON	MERITOR MASTER CYLINDER	MERITOR MASTER CYLINDER KIT	MERITOR BRAKE HOSE (LEFT)	MERITOR BRAKE HOSE (RIGHT)
									FORD(Cont.)
									C700 SERIES: TILT CAB(Cont.)
23-122691-002[42]	2-7/8 "	60050145X	60050145X[37]	60050146	69270702[41]	R4111995[53]	-	R4577461	R4577461
23-122700-002[9]	2-1/2 "	R424244X	R424244X[37]	60050266	69270757[41]	R4111995[53]	-	R4577461	R4577461
23-122700-002[9]	2-1/2 "	R424244X	R424244X[37]	60050266	69270757[41]	R4111999[53]	R4122386	R4577461	R4577461
N/A	1-5/8 "	201181	201182	SP7895S	NR	-	-	N/A	N/A
N/A	1-5/8 "	201185	201186[329]	SP7895S	NR	-	-	N/A	N/A
N/A	1-3/4 "	201183X	201184X[329]	SP7873S	NR	-	-	N/A	N/A
N/A	1-3/4 "	201179X	201180X	SP7873S	SP7880S[204]	-	-	N/A	N/A
N/A	1-3/4 "	201183X	201184X[329]	SP7873S	NR	-	-	N/A	N/A
N/A	1-3/4 "	201179X	201180X	SP7873S	SP7880S[204]	-	-	N/A	N/A
23-122700-002[9]	2-1/2 "	R424244X	R424244X[37]	60050266	69270757[41]	R4111995[53]	-	R4577461	R4577461
23-122691-002[42]	2-7/8 "	60050145X	60050145X[37]	60050146	69270702[41]	R4111999[53]	R4122386	R4577461	R4577461
23-122703-002[186]	2-7/8 "	60050145X	60050145X[37]	60050146	69270702[41]	R4111999[53]	R4122386	R4577461	R4577461
23-122743-002[187]	2-7/8 "	60050145X	60050145X[37]	60050146	69270702[41]	R4111995[53]	-	R4577461	R4577461
23-122743-002[187]	2-7/8 "	60050145X	60050145X[37]	60050146	69270702[41]	R4111999[53]	R4122386	R4577461	R4577461
23-122700-002[9]	2-1/2 "	R424244X	R424244X[37]	60050266	69270757[41]	R4111999[53]	R4122386	R4577461	R4577461
23-122691-002[42]	2-7/8 "	60050145X	60050145X[37]	60050146	69270702[41]	R4111995[53]	-	R4577461	R4577461
23-122703-002[186]	2-7/8 "	60050145X	60050145X[37]	60050146	69270702[41]	R4111995[53]	-	R4577461	R4577461
N/A	1-5/8 "	201181	201182	SP7895S	NR	-	-	N/A	N/A
N/A	1-5/8 "	201185	201186[329]	SP7895S	NR	-	-	N/A	N/A
N/A	1-3/4 "	201179X	201180X	SP7873S	SP7880S[204]	-	-	N/A	N/A
N/A	1-3/4 "	201183X	201184X[329]	SP7873S	NR	-	-	N/A	N/A
N/A	1-3/4 "	201183X	201184X[329]	SP7873S	NR	-	-	N/A	N/A
N/A	1-3/4 "	201179X	201180X	SP7873S	SP7880S[204]	-	-	N/A	N/A
23-122703-002[186]	2-7/8 "	60050145X	60050145X[37]	60050146	69270702[41]	R4111995[53]	-	R4577461	R4577461
23-122743-002[187]	2-7/8 "	60050145X	60050145X[37]	60050146	69270702[41]	R4111995[53]	-	R4577461	R4577461
23-122700-002[9]	2-1/2 "	R424244X	R424244X[37]	60050266	69270757[41]	R4111995[53]	-	R4577461	R4577461
23-122700-002[9]	2-1/2 "	R424244X	R424244X[37]	60050266	69270757[41]	R4111999[53]	R4122386	R4577461	R4577461
23-122691-002[42]	2-7/8 "	60050145X	60050145X[37]	60050146	69270702[41]	R4111999[53]	R4122386	R4577461	R4577461
23-122703-002[186]	2-7/8 "	60050145X	60050145X[37]	60050146	69270702[41]	R4111999[53]	R4122386	R4577461	R4577461
23-122743-002[187]	2-7/8 "	60050145X	60050145X[37]	60050146	69270702[41]	R4111999[53]	R4122386	R4577461	R4577461
23-122691-002[42]	2-7/8 "	60050145X	60050145X[37]	60050146	69270702[41]	R4111995[53]	-	R4577461	R4577461
N/A	1-5/8 "	201185	201186[329]	SP7895S	NR	-	-	N/A	N/A
N/A	1-5/8 "	201181	201182	SP7895S	NR	-	-	N/A	N/A
N/A	1-3/4 "	201183X	201184X[329]	SP7873S	NR	-	-	N/A	N/A
N/A	1-3/4 "	201179X	201180X	SP7873S	SP7880S[204]	-	-	N/A	N/A
N/A	1-3/4 "	201183X	201184X[329]	SP7873S	NR	-	-	N/A	N/A
N/A	1-3/4 "	201179X	201180X	SP7873S	SP7880S[204]	-	-	N/A	N/A
23-122703-002[186]	2-7/8 "	60050145X	60050145X[37]	60050146	69270702[41]	R4111999[53]	R4122386	R4577461	R4577461
23-122743-002[187]	2-7/8 "	60050145X	60050145X[37]	60050146	69270702[41]	R4111999[53]	R4122386	R4577461	R4577461
23-122691-002[42]	2-7/8 "	60050145X	60050145X[37]	60050146	69270702[41]	R4111995[53]	-	R4577461	R4577461
23-122700-002[9]	2-1/2 "	R424244X	R424244X[37]	60050266	69270757[41]	R4111999[53]	R4122386	R4577461	R4577461
23-122700-002[9]	2-1/2 "	R424244X	R424244X[37]	60050266	69270757[41]	R4111995[53]	-	R4577461	R4577461
23-122743-002[187]	2-7/8 "	60050145X	60050145X[37]	60050146	69270702[41]	R4111995[53]	-	R4577461	R4577461
N/A	1-5/8 "	201181	201182	SP7895S	NR	-	-	N/A	N/A
N/A	1-5/8 "	201185	201186[329]	SP7895S	NR	-	-	N/A	N/A
N/A	1-3/4 "	201179X	201180X	SP7873S	SP7880S[204]	-	-	N/A	N/A
N/A	1-3/4 "	201183X	201184X[329]	SP7873S	NR	-	-	N/A	N/A
N/A	1-3/4 "	201183X	201184X[329]	SP7873S	NR	-	-	N/A	N/A
N/A	1-3/4 "	201179X	201180X	SP7873S	SP7880S[204]	-	-	N/A	N/A
23-122743-002[187]	2-7/8 "	60050145X	60050145X[37]	60050146	69270702[41]	R4111995[53]	-	R4577461	R4577461
23-122703-002[186]	2-7/8 "	60050145X	60050145X[37]	60050146	69270702[41]	R4111995[53]	-	R4577461	R4577461
23-122703-002[186]	2-7/8 "	60050145X	60050145X[37]	60050146	69270702[41]	R4111999[53]	R4122386	R4577461	R4577461
23-122743-002[187]	2-7/8 "	60050145X	60050145X[37]	60050146	69270702[41]	R4111999[53]	R4122386	R4577461	R4577461
23-122691-002[42]	2-7/8 "	60050145X	60050145X[37]	60050146	69270702[41]	R4111995[53]	-	R4577461	R4577461
23-122700-002[9]	2-1/2 "	R424244X	R424244X[37]	60050266	69270757[41]	R4111999[53]	R4122386	R4577461	R4577461
23-122700-002[9]	2-1/2 "	R424244X	R424244X[37]	60050266	69270757[41]	R4111995[53]	-	R4577461	R4577461
23-122691-002[42]	2-7/8 "	60050145X	60050145X[37]	60050146	69270702[41]	R4111999[53]	R4122386	R4577461	R4577461
N/A	1-5/8 "	201185	201186[329]	SP7895S	NR	-	-	N/A	N/A

329 - Forward

340 - Use 69160457 for Disc Pad Retainer Clip

341 - Use 69160445 for Disc Pad Retainer Clip

MAKE MODEL YEAR AXLE CODE AXLE WEIGHT	AXLE & BRK. TYPE	BRK. MFG.	BRAKE SIZE	FMSI	MERITOR DISC PAD OR BRAKE SHOE	MERITOR GUIDE PIN OR RETURN SPRING KIT	MERITOR CALIPER HWD. KIT OR RETURN SPRING KIT	MERITOR ADJUSTER KIT (LEFT WHEEL)	MERITOR ADJUSTER KIT (RIGHT WHEEL)
FORD(Cont.)									
C700 SERIES: TILT CAB(Cont.)									
1985									
	Ra	LG	15 " x 5 "	4528A - 542	N/A	R40H618	NR	NR	NR
	Ra	LG	15 " x 6 "	4504A - 543	N/A	R40H618	NR	NR	NR
	Ra	LG	15 " x 6 "	4504A - 543	N/A	R40H618	NR	SP7887S	SP7887S
	Ra	LG	15 " x 7 "	4505A - 544	N/A	R40H618	NR	NR	NR
	Ra	LG	15 " x 7 "	4505A - 544	N/A	R40H618	NR	SP7887S	SP7887S
1984									
	Fd	DN		7141 - D224	MD224[340]	69310693	60050153	NR	NR
	Fd	DN		7149 - D236	MD236[341]	69310693	R40H5523	NR	NR
	Fd	DN		7149 - D236	MD236[341]	69310693	R40H5523	NR	NR
	Fd	DN		7149 - D236	MD236[341]	69310693	R40H5523	NR	NR
	Fd	DN		7149 - D236	MD236[341]	69310693	R40H5523	NR	NR
	Fd	DN		7141 - D224	MD224[340]	69310693	60050153	NR	NR
	Fd	DN		7149 - D236	MD236[341]	69310693	R40H5523	NR	NR
	Fd	DN		7149 - D236	MD236[341]	69310693	R40H5523	NR	NR
	Ra	LG	15 " x 5 "	4528A - 542	N/A	R40H618	NR	NR	NR
	Ra	LG	15 " x 5 "	4528A - 542	N/A	R40H618	NR	SP7888S	SP7888S
	Ra	LG	15 " x 6 "	4504A - 543	N/A	R40H618	NR	SP7887S	SP7887S
	Ra	LG	15 " x 6 "	4504A - 543	N/A	R40H618	NR	NR	NR
	Ra	LG	15 " x 7 "	4505A - 544	N/A	R40H618	NR	SP7887S	SP7887S
	Ra	LG	15 " x 7 "	4505A - 544	N/A	R40H618	NR	NR	NR
C800 SERIES: TILT CAB									
1990									
	Fd	DN		7149 - D236	MD236[341]	69310693	69310782	NR	NR
	Fd	DN		7149 - D236	MD236[341]	69310693	69310782	NR	NR
	Fd	DN		7141 - D224	MD224[340]	69310693	60050153	NR	NR
	Fd	DN		7149 - D236	MD236[341]	69310693	69310782	NR	NR
	Ra	LG	15 " x 5 "	4528A - 542	N/A	R40H618	NR	SP7888S	SP7888S
	Ra	LG	15 " x 5 "	4528A - 542	N/A	R40H618	NR	NR	NR
	Ra	LG	15 " x 6 "	4504A - 543	N/A	R40H618	NR	SP7887S	SP7887S
	Ra	LG	15 " x 6 "	4504A - 543	N/A	R40H618	NR	NR	NR
	Ra	LG	15 " x 7 "	4505A - 544	N/A	R40H618	NR	SP7887S	SP7887S
	Ra	LG	15 " x 7 "	4505A - 544	N/A	R40H618	NR	NR	NR
1989									
	Fd	DN		7149 - D236	MD236[341]	69310693	69310782[43]	NR	NR
	Fd	DN		7149 - D236	MD236[341]	69310693	69310782[43]	NR	NR
	Fd	DN		7149 - D236	MD236[341]	69310693	69310782[43]	NR	NR
	Fd	DN		7149 - D236	MD236[341]	69310693	69310782[43]	NR	NR
	Fd	DN		7141 - D224	MD224[340]	69310693	60050153	NR	NR
	Fd	DN		7141 - D224	MD224[340]	69310693	60050153	NR	NR
	Fd	DN		7149 - D236	MD236[341]	69310693	69310782[43]	NR	NR
	Fd	DN		7149 - D236	MD236[341]	69310693	69310782[43]	NR	NR
	Ra	LG	15 " x 5 "	4528A - 542	N/A	R40H618	NR	NR	NR
	Ra	LG	15 " x 5 "	4528A - 542	N/A	R40H618	NR	SP7888S	SP7888S
	Ra	LG	15 " x 6 "	4504A - 543	N/A	R40H618	NR	SP7887S	SP7887S
	Ra	LG	15 " x 6 "	4504A - 543	N/A	R40H618	NR	NR	NR
	Ra	LG	15 " x 7 "	4505A - 544	N/A	R40H618	NR	SP7887S	SP7887S
	Ra	LG	15 " x 7 "	4505A - 544	N/A	R40H618	NR	NR	NR
1988									
	Fd	DN		7149 - D236	MD236[341]	69310693	69310782[43]	NR	NR
	Fd	DN		7149 - D236	MD236[341]	69310693	69310782[43]	NR	NR
	Fd	DN		7141 - D224	MD224[340]	69310693	60050153	NR	NR
	Fd	DN		7149 - D236	MD236[341]	69310693	69310782[43]	NR	NR
	Fd	DN		7149 - D236	MD236[341]	69310693	69310782[43]	NR	NR
	Fd	DN		7141 - D224	MD224[340]	69310693	60050153	NR	NR
	Fd	DN		7149 - D236	MD236[341]	69310693	69310782[43]	NR	NR
	Fd	DN		7149 - D236	MD236[341]	69310693	69310782[43]	NR	NR
	Ra	LG	15 " x 5 "	4528A - 542	N/A	R40H618	NR	SP7888S	SP7888S
	Ra	LG	15 " x 5 "	4528A - 542	N/A	R40H618	NR	NR	NR
	Ra	LG	15 " x 6 "	4504A - 543	N/A	R40H618	NR	SP7887S	SP7887S
	Ra	LG	15 " x 6 "	4504A - 543	N/A	R40H618	NR	NR	NR
	Ra	LG	15 " x 7 "	4505A - 544	N/A	R40H618	NR	SP7887S	SP7887S
	Ra	LG	15 " x 7 "	4505A - 544	N/A	R40H618	NR	NR	NR
1987									
	Fd	DN		7141 - D224	MD224[340]	69310693	60050153	NR	NR

9 - 6 Stud, Dayton Rotor, Hat Style
42 - 6 Stud, Dayton Rotor, "U" Style
186 - 10 Stud
37 - Also available as a New unit
43 - For Applications Taking A Longer Shim, Use R404151706
187 - 6 Stud, 6.443" Hub
41 - Aluminum piston
53 - Power Brakes
204 - Right Hand; use E-4057 for Left Hand Expander Kits

MERITOR DRUM OR ROTOR NO.	CALIPER OR CYLINDER BORE SIZE	MERITOR CALIPER OR WHEEL CYLINDER (LEFT)	MERITOR CALIPER OR WHEEL CYLINDER (RIGHT)	MERITOR CALIPER OR WHEEL CYLINDER REPAIR KIT	MERITOR CALIPER PISTON	MERITOR MASTER CYLINDER	MERITOR MASTER CYLINDER KIT	MERITOR BRAKE HOSE (LEFT)	MERITOR BRAKE HOSE (RIGHT)
FORD(Cont.)									
C700 SERIES: TILT CAB(Cont.)									
N/A	1-5/8 "	201181	201182	SP7895S	NR	-	-	N/A	N/A
N/A	1-3/4 "	201179X	201180X	SP7873S	SP7880S[204]	-	-	N/A	N/A
N/A	1-3/4 "	201183X	201184X[329]	SP7873S	NR	-	-	N/A	N/A
N/A	1-3/4 "	201179X	201180X	SP7873S	SP7880S[204]	-	-	N/A	N/A
N/A	1-3/4 "	201183X	201184X[329]	SP7873S	NR	-	-	N/A	N/A
23-122700-002[9]	2-1/2 "	R424244X	R424244X[37]	60050266	69270757[41]	R4111995[53]	-	R4577461	R4577461
23-122703-002[186]	2-7/8 "	60050145X	60050145X[37]	60050146	69270702[41]	R4111999[53]	R4122386	R4577461	R4577461
23-122743-002[187]	2-7/8 "	60050145X	60050145X[37]	60050146	69270702[41]	R4111995[53]	-	R4577461	R4577461
23-122743-002[187]	2-7/8 "	60050145X	60050145X[37]	60050146	69270702[41]	R4111999[53]	R4122386	R4577461	R4577461
23-122691-002[42]	2-7/8 "	60050145X	60050145X[37]	60050146	69270702[41]	R4111995[53]	-	R4577461	R4577461
23-122700-002[9]	2-1/2 "	R424244X	R424244X[37]	60050266	69270757[41]	R4111999[53]	R4122386	R4577461	R4577461
23-122691-002[42]	2-7/8 "	60050145X	60050145X[37]	60050146	69270702[41]	R4111999[53]	R4122386	R4577461	R4577461
23-122703-002[186]	2-7/8 "	60050145X	60050145X[37]	60050146	69270702[41]	R4111995[53]	-	R4577461	R4577461
N/A	1-5/8 "	201181	201182	SP7895S	NR	-	-	N/A	N/A
N/A	1-5/8 "	201185	201186[329]	SP7895S	NR	-	-	N/A	N/A
N/A	1-3/4 "	201183X	201184X[329]	SP7873S	NR	-	-	N/A	N/A
N/A	1-3/4 "	201179X	201180X	SP7873S	SP7880S[204]	-	-	N/A	N/A
N/A	1-3/4 "	201183X	201184X[329]	SP7873S	NR	-	-	N/A	N/A
N/A	1-3/4 "	201179X	201180X	SP7873S	SP7880S[204]	-	-	N/A	N/A
C800 SERIES: TILT CAB									
23-122691-002[42]	2-7/8 "	60050145X	60050145X[37]	60050146	69270702[41]	-	-	R4577461	R4577461
23-122703-002[186]	2-7/8 "	60050145X	60050145X[37]	60050146	69270702[41]	-	-	R4577461	R4577461
23-122700-002[9]	2-1/2 "	R424244X	R424244X[37]	60050266	69270757[41]	-	-	R4577461	R4577461
23-122743-002[187]	2-7/8 "	60050145X	60050145X[37]	60050146	69270702[41]	-	-	R4577461	R4577461
N/A	1-5/8 "	201185	201186[329]	SP7895S	NR	-	-	R4577870	R4577870
N/A	1-5/8 "	201181	201182	SP7895S	NR	-	-	R4577870	R4577870
N/A	1-3/4 "	201183X	201184X[329]	SP7873S	NR	-	-	R4577870	R4577870
N/A	1-3/4 "	201179X	201180X	SP7873S	SP7880S[204]	-	-	R4577870	R4577870
N/A	1-3/4 "	201183X	201184X[329]	SP7873S	NR	-	-	R4577870	R4577870
N/A	1-3/4 "	201179X	201180X	SP7873S	SP7880S[204]	-	-	R4577870	R4577870
23-122743-002[187]	2-7/8 "	60050145X	60050145X[37]	60050146	69270702[41]	R4111999[53]	R4122386	R4577461	R4577461
23-122703-002[186]	2-7/8 "	60050145X	60050145X[37]	60050146	69270702[41]	R4111995[53]	-	R4577461	R4577461
23-122703-002[186]	2-7/8 "	60050145X	60050145X[37]	60050146	69270702[41]	R4111999[53]	R4122386	R4577461	R4577461
23-122743-002[187]	2-7/8 "	60050145X	60050145X[37]	60050146	69270702[41]	R4111995[53]	-	R4577461	R4577461
23-122700-002[9]	2-1/2 "	R424244X	R424244X[37]	60050266	69270757[41]	R4111999[53]	R4122386	R4577461	R4577461
23-122700-002[9]	2-1/2 "	R424244X	R424244X[37]	60050266	69270757[41]	R4111995[53]	-	R4577461	R4577461
23-122691-002[42]	2-7/8 "	60050145X	60050145X[37]	60050146	69270702[41]	R4111999[53]	R4122386	R4577461	R4577461
23-122691-002[42]	2-7/8 "	60050145X	60050145X[37]	60050146	69270702[41]	R4111995[53]	-	R4577461	R4577461
N/A	1-5/8 "	201181	201182	SP7895S	NR	-	-	N/A	N/A
N/A	1-5/8 "	201185	201186[329]	SP7895S	NR	-	-	N/A	N/A
N/A	1-3/4 "	201183X	201184X[329]	SP7873S	NR	-	-	N/A	N/A
N/A	1-3/4 "	201179X	201180X	SP7873S	SP7880S[204]	-	-	N/A	N/A
N/A	1-3/4 "	201183X	201184X[329]	SP7873S	NR	-	-	N/A	N/A
N/A	1-3/4 "	201179X	201180X	SP7873S	SP7880S[204]	-	-	N/A	N/A
23-122703-002[186]	2-7/8 "	60050145X	60050145X[37]	60050146	69270702[41]	R4111995[53]	-	R4577461	R4577461
23-122691-002[42]	2-7/8 "	60050145X	60050145X[37]	60050146	69270702[41]	R4111995[53]	-	R4577461	R4577461
23-122700-002[9]	2-1/2 "	R424244X	R424244X[37]	60050266	69270757[41]	R4111999[53]	R4122386	R4577461	R4577461
23-122691-002[42]	2-7/8 "	60050145X	60050145X[37]	60050146	69270702[41]	R4111999[53]	R4122386	R4577461	R4577461
23-122743-002[187]	2-7/8 "	60050145X	60050145X[37]	60050146	69270702[41]	R4111995[53]	-	R4577461	R4577461
23-122700-002[9]	2-1/2 "	R424244X	R424244X[37]	60050266	69270757[41]	R4111995[53]	-	R4577461	R4577461
23-122743-002[187]	2-7/8 "	60050145X	60050145X[37]	60050146	69270702[41]	R4111999[53]	R4122386	R4577461	R4577461
23-122703-002[186]	2-7/8 "	60050145X	60050145X[37]	60050146	69270702[41]	R4111999[53]	R4122386	R4577461	R4577461
N/A	1-5/8 "	201185	201186[329]	SP7895S	NR	-	-	N/A	N/A
N/A	1-5/8 "	201181	201182	SP7895S	NR	-	-	N/A	N/A
N/A	1-3/4 "	201183X	201184X[329]	SP7873S	NR	-	-	N/A	N/A
N/A	1-3/4 "	201179X	201180X	SP7873S	SP7880S[204]	-	-	N/A	N/A
N/A	1-3/4 "	201183X	201184X[329]	SP7873S	NR	-	-	N/A	N/A
N/A	1-3/4 "	201179X	201180X	SP7873S	SP7880S[204]	-	-	N/A	N/A
23-122700-002[9]	2-1/2 "	R424244X	R424244X[37]	60050266	69270757[41]	R4111999[53]	R4122386	R4577461	R4577461

329 - Forward

340 - Use 69160457 for Disc Pad Retainer Clip

341 - Use 69160445 for Disc Pad Retainer Clip

MAKE MODEL YEAR AXLE CODE AXLE WEIGHT	AXLE & BRK. TYPE	BRK. MFG.	BRAKE SIZE	FMSI	MERITOR DISC PAD OR BRAKE SHOE	MERITOR GUIDE PIN OR RETURN SPRING KIT	MERITOR CALIPER HWD. KIT OR RETURN SPRING KIT	MERITOR ADJUSTER KIT (LEFT WHEEL)	MERITOR ADJUSTER KIT (RIGHT WHEEL)
FORD(Cont.)									
C800 SERIES: TILT CAB(Cont.)									
1987									
	Fd	DN		7141 - D224	MD224[340]	69310693	60050153	NR	NR
	Fd	DN		7149 - D236	MD236[341]	69310693	69310782[43]	NR	NR
	Fd	DN		7149 - D236	MD236[341]	69310693	69310782[43]	NR	NR
	Fd	DN		7149 - D236	MD236[341]	69310693	69310782[43]	NR	NR
	Fd	DN		7149 - D236	MD236[341]	69310693	69310782[43]	NR	NR
	Fd	DN		7149 - D236	MD236[341]	69310693	69310782[43]	NR	NR
	Fd	DN		7149 - D236	MD236[341]	69310693	69310782[43]	NR	NR
	Ra	LG	15 " x 5 "	4528A - 542	N/A	R40H618	NR	NR	NR
	Ra	LG	15 " x 5 "	4528A - 542	N/A	R40H618	NR	SP7888S	SP7888S
	Ra	LG	15 " x 6 "	4504A - 543	N/A	R40H618	NR	NR	NR
	Ra	LG	15 " x 6 "	4504A - 543	N/A	R40H618	NR	SP7887S	SP7887S
	Ra	LG	15 " x 7 "	4505A - 544	N/A	R40H618	NR	SP7887S	SP7887S
	Ra	LG	15 " x 7 "	4505A - 544	N/A	R40H618	NR	NR	NR
1986									
	Fd	DN		7141 - D224	MD224[340]	69310693	60050153	NR	NR
	Fd	DN		7149 - D236	MD236[341]	69310693	69310782	NR	NR
	Fd	DN		7149 - D236	MD236[341]	69310693	69310782	NR	NR
	Fd	DN		7141 - D224	MD224[340]	69310693	60050153	NR	NR
	Fd	DN		7149 - D236	MD236[341]	69310693	69310782	NR	NR
	Fd	DN		7149 - D236	MD236[341]	69310693	69310782	NR	NR
	Fd	DN		7149 - D236	MD236[341]	69310693	69310782	NR	NR
	Fd	DN		7149 - D236	MD236[341]	69310693	69310782	NR	NR
	Ra	LG	15 " x 5 "	4528A - 542	N/A	R40H618	NR	SP7888S	SP7888S
	Ra	LG	15 " x 5 "	4528A - 542	N/A	R40H618	NR	NR	NR
	Ra	LG	15 " x 6 "	4504A - 543	N/A	R40H618	NR	SP7887S	SP7887S
	Ra	LG	15 " x 6 "	4504A - 543	N/A	R40H618	NR	NR	NR
	Ra	LG	15 " x 7 "	4505A - 544	N/A	R40H618	NR	NR	NR
	Ra	LG	15 " x 7 "	4505A - 544	N/A	R40H618	NR	SP7887S	SP7887S
1985									
	Fd	DN		7149 - D236	MD236[341]	69310693	R40H5523	NR	NR
	Fd	DN		7149 - D236	MD236[341]	69310693	R40H5523	NR	NR
	Fd	DN		7149 - D236	MD236[341]	69310693	R40H5523	NR	NR
	Fd	DN		7149 - D236	MD236[341]	69310693	R40H5523	NR	NR
	Fd	DN		7141 - D224	MD224[340]	69310693	60050153	NR	NR
	Fd	DN		7141 - D224	MD224[340]	69310693	60050153	NR	NR
	Fd	DN		7149 - D236	MD236[341]	69310693	R40H5523	NR	NR
	Fd	DN		7149 - D236	MD236[341]	69310693	R40H5523	NR	NR
	Ra	LG	15 " x 5 "	4528A - 542	N/A	R40H618	NR	NR	NR
	Ra	LG	15 " x 5 "	4528A - 542	N/A	R40H618	NR	SP7888S	SP7888S
	Ra	LG	15 " x 6 "	4504A - 543	N/A	R40H618	NR	NR	NR
	Ra	LG	15 " x 6 "	4504A - 543	N/A	R40H618	NR	SP7887S	SP7887S
	Ra	LG	15 " x 7 "	4505A - 544	N/A	R40H618	NR	SP7887S	SP7887S
	Ra	LG	15 " x 7 "	4505A - 544	N/A	R40H618	NR	NR	NR
1984									
	Fd	DN		7141 - D224	MD224[340]	69310693	60050153	NR	NR
	Fd	DN		7149 - D236	MD236[341]	69310693	R40H5523	NR	NR
	Fd	DN		7149 - D236	MD236[341]	69310693	R40H5523	NR	NR
	Fd	DN		7149 - D236	MD236[341]	69310693	R40H5523	NR	NR
	Fd	DN		7149 - D236	MD236[341]	69310693	R40H5523	NR	NR
	Fd	DN		7141 - D224	MD224[340]	69310693	60050153	NR	NR
	Fd	DN		7149 - D236	MD236[341]	69310693	R40H5523	NR	NR
	Fd	DN		7149 - D236	MD236[341]	69310693	R40H5523	NR	NR
	Ra	LG	15 " x 5 "	4528A - 542	N/A	R40H618	NR	NR	NR
	Ra	LG	15 " x 5 "	4528A - 542	N/A	R40H618	NR	SP7888S	SP7888S
	Ra	LG	15 " x 6 "	4504A - 543	N/A	R40H618	NR	NR	NR
	Ra	LG	15 " x 6 "	4504A - 543	N/A	R40H618	NR	SP7887S	SP7887S
	Ra	LG	15 " x 7 "	4505A - 544	N/A	R40H618	NR	SP7887S	SP7887S
	Ra	LG	15 " x 7 "	4505A - 544	N/A	R40H618	NR	NR	NR
CF600, 6000 SERIES: CARGO, CAB FORWARD DESIGN									
1991									
	Fd				MD379	R407182	R407181	NR	NR
	Ra	LG	15 " x 7 "	4505A - 544	N/A	R40H618	NR	SP7887S	SP7887S
	Ra	LG	15 " x 7 "	4505A - 544	N/A	R40H618	NR	NR	NR

9 - 6 Stud, Dayton Rotor, Hat Style
42 - 6 Stud, Dayton Rotor, "U" Style
161 - 8 Stud
37 - Also available as a New unit
43 - For Applications Taking A Longer Shim, Use R404151706
186 - 10 Stud
41 - Aluminum piston
53 - Power Brakes
187 - 6 Stud, 6.443" Hub

MERITOR DRUM OR ROTOR NO.	CALIPER OR CYLINDER BORE SIZE	MERITOR CALIPER OR WHEEL CYLINDER (LEFT)	MERITOR CALIPER OR WHEEL CYLINDER (RIGHT)	MERITOR CALIPER OR WHEEL CYLINDER REPAIR KIT	MERITOR CALIPER PISTON	MERITOR MASTER CYLINDER	MERITOR MASTER CYLINDER KIT	MERITOR BRAKE HOSE (LEFT)	MERITOR BRAKE HOSE (RIGHT)
FORD(Cont.)									
C800 SERIES: TILT CAB(Cont.)									
23-122700-002[9]	2-1/2 "	R424244X	R424244X[37]	60050266	69270757[41]	R4111995[53]	-	R4577461	R4577461
23-122743-002[187]	2-7/8 "	60050145X	60050145X[37]	60050146	69270702[41]	R4111995[53]	-	R4577461	R4577461
23-122743-002[187]	2-7/8 "	60050145X	60050145X[37]	60050146	69270702[41]	R4111999[53]	R4122386	R4577461	R4577461
23-122703-002[186]	2-7/8 "	60050145X	60050145X[37]	60050146	69270702[41]	R4111999[53]	R4122386	R4577461	R4577461
23-122691-002[42]	2-7/8 "	60050145X	60050145X[37]	60050146	69270702[41]	R4111995[53]	-	R4577461	R4577461
23-122703-002[186]	2-7/8 "	60050145X	60050145X[37]	60050146	69270702[41]	R4111995[53]	-	R4577461	R4577461
23-122691-002[42]	2-7/8 "	60050145X	60050145X[37]	60050146	69270702[41]	R4111999[53]	R4122386	R4577461	R4577461
N/A	1-5/8 "	201181	201182	SP7895S	NR	-	-	N/A	N/A
N/A	1-5/8 "	201185	201186[329]	SP7895S	NR	-	-	N/A	N/A
N/A	1-3/4 "	201179X	201180X	SP7873S	SP7880S[204]	-	-	N/A	N/A
N/A	1-3/4 "	201183X	201184X[329]	SP7873S	NR	-	-	N/A	N/A
N/A	1-3/4 "	201183X	201184X[329]	SP7873S	NR	-	-	N/A	N/A
N/A	1-3/4 "	201179X	201180X	SP7873S	SP7880S[204]	-	-	N/A	N/A
23-122700-002[9]	2-1/2 "	R424244X	R424244X[37]	60050266	69270757[41]	R4111995[53]	-	R4577461	R4577461
23-122691-002[42]	2-7/8 "	60050145X	60050145X[37]	60050146	69270702[41]	R4111995[53]	-	R4577461	R4577461
23-122743-002[187]	2-7/8 "	60050145X	60050145X[37]	60050146	69270702[41]	R4111999[53]	R4122386	R4577461	R4577461
23-122700-002[9]	2-1/2 "	R424244X	R424244X[37]	60050266	69270757[41]	R4111999[53]	R4122386	R4577461	R4577461
23-122691-002[42]	2-7/8 "	60050145X	60050145X[37]	60050146	69270702[41]	R4111999[53]	R4122386	R4577461	R4577461
23-122703-002[186]	2-7/8 "	60050145X	60050145X[37]	60050146	69270702[41]	R4111999[53]	R4122386	R4577461	R4577461
23-122743-002[187]	2-7/8 "	60050145X	60050145X[37]	60050146	69270702[41]	R4111995[53]	-	R4577461	R4577461
23-122703-002[186]	2-7/8 "	60050145X	60050145X[37]	60050146	69270702[41]	R4111995[53]	-	R4577461	R4577461
N/A	1-5/8 "	201185	201186[329]	SP7895S	NR	-	-	N/A	N/A
N/A	1-5/8 "	201181	201182	SP7895S	NR	-	-	N/A	N/A
N/A	1-3/4 "	201183X	201184X[329]	SP7873S	NR	-	-	N/A	N/A
N/A	1-3/4 "	201179X	201180X	SP7873S	SP7880S[204]	-	-	N/A	N/A
N/A	1-3/4 "	201179X	201180X	SP7873S	SP7880S[204]	-	-	N/A	N/A
N/A	1-3/4 "	201183X	201184X[329]	SP7873S	NR	-	-	N/A	N/A
23-122743-002[187]	2-7/8 "	60050145X	60050145X[37]	60050146	69270702[41]	R4111995[53]	-	R4577461	R4577461
23-122743-002[187]	2-7/8 "	60050145X	60050145X[37]	60050146	69270702[41]	R4111999[53]	R4122386	R4577461	R4577461
23-122703-002[186]	2-7/8 "	60050145X	60050145X[37]	60050146	69270702[41]	R4111995[53]	-	R4577461	R4577461
23-122703-002[186]	2-7/8 "	60050145X	60050145X[37]	60050146	69270702[41]	R4111999[53]	R4122386	R4577461	R4577461
23-122700-002[9]	2-1/2 "	R424244X	R424244X[37]	60050266	69270757[41]	R4111995[53]	-	R4577461	R4577461
23-122700-002[9]	2-1/2 "	R424244X	R424244X[37]	60050266	69270757[41]	R4111999[53]	R4122386	R4577461	R4577461
23-122691-002[42]	2-7/8 "	60050145X	60050145X[37]	60050146	69270702[41]	R4111999[53]	R4122386	R4577461	R4577461
23-122691-002[42]	2-7/8 "	60050145X	60050145X[37]	60050146	69270702[41]	R4111995[53]	-	R4577461	R4577461
N/A	1-5/8 "	201181	201182	SP7895S	NR	-	-	N/A	N/A
N/A	1-5/8 "	201185	201186[329]	SP7895S	NR	-	-	N/A	N/A
N/A	1-3/4 "	201179X	201180X	SP7873S	SP7880S[204]	-	-	N/A	N/A
N/A	1-3/4 "	201183X	201184X[329]	SP7873S	NR	-	-	N/A	N/A
N/A	1-3/4 "	201183X	201184X[329]	SP7873S	NR	-	-	N/A	N/A
N/A	1-3/4 "	201179X	201180X	SP7873S	SP7880S[204]	-	-	N/A	N/A
23-122700-002[9]	2-1/2 "	R424244X	R424244X[37]	60050266	69270757[41]	R4111995[53]	-	R4577461	R4577461
23-122691-002[42]	2-7/8 "	60050145X	60050145X[37]	60050146	69270702[41]	R4111999[53]	R4122386	R4577461	R4577461
23-122743-002[187]	2-7/8 "	60050145X	60050145X[37]	60050146	69270702[41]	R4111995[53]	-	R4577461	R4577461
23-122703-002[186]	2-7/8 "	60050145X	60050145X[37]	60050146	69270702[41]	R4111999[53]	R4122386	R4577461	R4577461
23-122743-002[187]	2-7/8 "	60050145X	60050145X[37]	60050146	69270702[41]	R4111999[53]	R4122386	R4577461	R4577461
23-122700-002[9]	2-1/2 "	R424244X	R424244X[37]	60050266	69270757[41]	R4111999[53]	R4122386	R4577461	R4577461
23-122703-002[186]	2-7/8 "	60050145X	60050145X[37]	60050146	69270702[41]	R4111995[53]	-	R4577461	R4577461
23-122691-002[42]	2-7/8 "	60050145X	60050145X[37]	60050146	69270702[41]	R4111995[53]	-	R4577461	R4577461
N/A	1-5/8 "	201181	201182	SP7895S	NR	-	-	N/A	N/A
N/A	1-5/8 "	201185	201186[329]	SP7895S	NR	-	-	N/A	N/A
N/A	1-3/4 "	201179X	201180X	SP7873S	SP7880S[204]	-	-	N/A	N/A
N/A	1-3/4 "	201183X	201184X[329]	SP7873S	NR	-	-	N/A	N/A
N/A	1-3/4 "	201183X	201184X[329]	SP7873S	NR	-	-	N/A	N/A
N/A	1-3/4 "	201179X	201180X	SP7873S	SP7880S[204]	-	-	N/A	N/A
CF600, 6000 SERIES: CARGO, CAB FORWARD DESIGN									
Discontinued[161]		R427178X	R427179X[37]	Discontinued	Discontinued	-	-	-	-
N/A	1-3/4 "	201183X	201184X[329]	SP7873S	NR	-	-	R4577870	R4577870
N/A	1-3/4 "	201179X	201180X	SP7873S	SP7880S[204]	-	-	R4577870	R4577870

204 - Right Hand; use E-4057 for Left Hand Expander Kits
329 - Forward
340 - Use 69160457 for Disc Pad Retainer Clip
341 - Use 69160445 for Disc Pad Retainer Clip

MAKE MODEL YEAR AXLE CODE AXLE WEIGHT	AXLE & BRK. TYPE	BRK. MFG.	BRAKE SIZE	FMSI	MERITOR DISC PAD OR BRAKE SHOE	MERITOR GUIDE PIN OR RETURN SPRING KIT	MERITOR CALIPER HWD. KIT OR RETURN SPRING KIT	MERITOR ADJUSTER KIT (LEFT WHEEL)	MERITOR ADJUSTER KIT (RIGHT WHEEL)
FORD(Cont.)									
CF600, 6000 SERIES: CARGO, CAB FORWARD DESIGN(Cont.)									
1990									
	Fd				MD379	R407182	R407181	NR	NR
	Ra	LG	15 " x 7 "	4505A - 544	N/A	R40H618	NR	SP7887S	SP7887S
	Ra	LG	15 " x 7 "	4505A - 544	N/A	R40H618	NR	NR	NR
1989									
	Fd				MD379	R407182	R407181	NR	NR
	Fd				MD379	R407182	R40H5536[146]	NR	NR
	Ra	LG	15 " x 7 "	4505A - 544	N/A	R40H618	NR	NR	NR
	Ra	LG	15 " x 7 "	4505A - 544	N/A	R40H618	NR	SP7887S	SP7887S
1988									
	Fd				MD379	R407182	R40H5536[146]	NR	NR
	Fd				MD379	R407182	R407181	NR	NR
	Ra	LG	15 " x 7 "	4505A - 544	N/A	R40H618	NR	NR	NR
	Ra	LG	15 " x 7 "	4505A - 544	N/A	R40H618	NR	SP7887S	SP7887S
1987									
	Fd				MD379	R407182	R40H5536[146]	NR	NR
	Fd				MD379	R407182	R407181	NR	NR
	Ra	LG	15 " x 7 "	4505A - 544	N/A	R40H618	NR	NR	NR
	Ra	LG	15 " x 7 "	4505A - 544	N/A	R40H618	NR	SP7887S	SP7887S
1986									
	Fd				MD379	R407182	R407181	NR	NR
	Fd				MD379	R407182	R40H5536[146]	NR	NR
	Ra	LG	15 " x 7 "	4505A - 544	N/A	R40H618	NR	SP7887S	SP7887S
	Ra	LG	15 " x 7 "	4505A - 544	N/A	R40H618	NR	NR	NR
1985									
	Fd				MD379	R407182	R407181	NR	NR
	Ra	LG	15 " x 7 "	4505A - 544	N/A	R40H618	NR	SP7887S	SP7887S
	Ra	LG	15 " x 7 "	4505A - 544	N/A	R40H618	NR	NR	NR
CF700, 7000 SERIES: CARGO, CAB FORWARD DESIGN									
1991									
	Fd				MD379	R407182	R407181	NR	NR
1990									
	Fd				MD379	R407182	R407181	NR	NR
1989									
	Fd				MD379	R407182	R40H5536[146]	NR	NR
	Fd				MD379	R407182	R407181	NR	NR
	Ra	LG	15 " x 7 "	4505A - 544	N/A	R40H618	NR	NR	NR
	Ra	LG	15 " x 7 "	4505A - 544	N/A	R40H618	NR	SP7887S	SP7887S
1988									
	Fd				MD379	R407182	R40H5536[146]	NR	NR
	Fd				MD379	R407182	R407181	NR	NR
	Ra	LG	15 " x 7 "	4505A - 544	N/A	R40H618	NR	NR	NR
	Ra	LG	15 " x 7 "	4505A - 544	N/A	R40H618	NR	SP7887S	SP7887S
1987									
	Fd				MD379	R407182	R407181	NR	NR
	Fd				MD379	R407182	R40H5536[146]	NR	NR
	Ra	LG	15 " x 7 "	4505A - 544	N/A	R40H618	NR	NR	NR
	Ra	LG	15 " x 7 "	4505A - 544	N/A	R40H618	NR	SP7887S	SP7887S
1986									
	Fd				MD379	R407182	R40H5536[146]	NR	NR
	Fd				MD379	R407182	R407181	NR	NR
	Ra	LG	15 " x 7 "	4505A - 544	N/A	R40H618	NR	NR	NR
	Ra	LG	15 " x 7 "	4505A - 544	N/A	R40H618	NR	SP7887S	SP7887S
1985									
	Fd				MD379	R407182	R407181	NR	NR
CF800, 8000 SERIES: CARGO, CAB FORWARD DESIGN									
1991									
	Fd				MD379	R407182	R40H5536[146]	NR	NR
1990									
	Fd				MD379	R407182	R40H5536[146]	NR	NR
1989									
	Fd				MD379	R407182	R40H5536[146]	NR	NR
	Ra	LG	15 " x 7 "	4505A - 544	N/A	R40H618	NR	SP7887S	SP7887S
	Ra	LG	15 " x 7 "	4505A - 544	N/A	R40H618	NR	NR	NR

37 - Also available as a New unit
161 - 8 Stud
204 - Right Hand; use E-4057 for Left Hand Expander Kits
54 - Manual Brakes
186 - 10 Stud
329 - Forward
146 - Use E-7181 for Disc Pad Retainer
201 - Steel Piston

MERITOR DRUM OR ROTOR NO.	CALIPER OR CYLINDER BORE SIZE	MERITOR CALIPER OR WHEEL CYLINDER (LEFT)	MERITOR CALIPER OR WHEEL CYLINDER (RIGHT)	MERITOR CALIPER OR WHEEL CYLINDER REPAIR KIT	MERITOR CALIPER PISTON	MERITOR MASTER CYLINDER	MERITOR MASTER CYLINDER KIT	MERITOR BRAKE HOSE (LEFT)	MERITOR BRAKE HOSE (RIGHT)
									FORD(Cont.)
									CF600, 6000 SERIES: CARGO, CAB FORWARD DESIGN(Cont.)
Discontinued[161]		R427178X	R427179X[37]	Discontinued	Discontinued	-	-	-	-
N/A	1-3/4 "	201183X	201184X[329]	SP7873S	NR	-	-	R4577870	R4577870
N/A	1-3/4 "	201179X	201180X	SP7873S	SP7880S[204]	-	-	R4577870	R4577870
Discontinued[161]		R427178X	R427179X[37]	Discontinued	Discontinued	-	-	-	-
Discontinued[161]		R427178X	R427179X[37]	Discontinued	Discontinued[201]	R4112466[54]	N/A	-	-
N/A	1-3/4 "	201179X	201180X	SP7873S	SP7880S[204]	-	-	N/A	N/A
N/A	1-3/4 "	201183X	201184X[329]	SP7873S	NR	-	-	N/A	N/A
Discontinued[161]		R427178X	R427179X[37]	Discontinued	Discontinued[201]	R4112466[54]	N/A	-	-
Discontinued[161]		R427178X	R427179X[37]	Discontinued	Discontinued	-	-	-	-
N/A	1-3/4 "	201179X	201180X	SP7873S	SP7880S[204]	-	-	N/A	N/A
N/A	1-3/4 "	201183X	201184X[329]	SP7873S	NR	-	-	N/A	N/A
Discontinued[161]		R427178X	R427179X[37]	Discontinued	Discontinued[201]	R4112466[54]	N/A	-	-
Discontinued[161]		R427178X	R427179X[37]	Discontinued	Discontinued	-	-	-	-
N/A	1-3/4 "	201179X	201180X	SP7873S	SP7880S[204]	-	-	N/A	N/A
N/A	1-3/4 "	201183X	201184X[329]	SP7873S	NR	-	-	N/A	N/A
Discontinued[161]		R427178X	R427179X[37]	Discontinued	Discontinued	-	-	-	-
Discontinued[161]		R427178X	R427179X[37]	Discontinued	Discontinued[201]	R4112466[54]	N/A	-	-
N/A	1-3/4 "	201183X	201184X[329]	SP7873S	NR	-	-	N/A	N/A
N/A	1-3/4 "	201179X	201180X	SP7873S	SP7880S[204]	-	-	N/A	N/A
Discontinued[161]		R427178X	R427179X[37]	Discontinued	Discontinued	-	-	-	-
N/A	1-3/4 "	201183X	201184X[329]	SP7873S	NR	-	-	N/A	N/A
N/A	1-3/4 "	201179X	201180X	SP7873S	SP7880S[204]	-	-	N/A	N/A
									CF700, 7000 SERIES: CARGO, CAB FORWARD DESIGN
Discontinued[186]		R427178X	R427179X[37]	Discontinued	Discontinued	-	-	-	-
Discontinued[186]		R427178X	R427179X[37]	Discontinued	Discontinued	-	-	-	-
Discontinued[186]		R427178X	R427179X[37]	Discontinued	Discontinued[201]	R4112466[54]	N/A	-	-
Discontinued[186]		R427178X	R427179X[37]	Discontinued	Discontinued	-	-	-	-
N/A	1-3/4 "	201179X	201180X	SP7873S	SP7880S[204]	-	-	N/A	N/A
N/A	1-3/4 "	201183X	201184X[329]	SP7873S	NR	-	-	N/A	N/A
Discontinued[186]		R427178X	R427179X[37]	Discontinued	Discontinued[201]	R4112466[54]	N/A	-	-
Discontinued[186]		R427178X	R427179X[37]	Discontinued	Discontinued	-	-	-	-
N/A	1-3/4 "	201179X	201180X	SP7873S	SP7880S[204]	-	-	N/A	N/A
N/A	1-3/4 "	201183X	201184X[329]	SP7873S	NR	-	-	N/A	N/A
Discontinued[186]		R427178X	R427179X[37]	Discontinued	Discontinued	-	-	-	-
Discontinued[186]		R427178X	R427179X[37]	Discontinued	Discontinued[201]	R4112466[54]	N/A	-	-
N/A	1-3/4 "	201179X	201180X	SP7873S	SP7880S[204]	-	-	N/A	N/A
N/A	1-3/4 "	201183X	201184X[329]	SP7873S	NR	-	-	N/A	N/A
Discontinued[186]		R427178X	R427179X[37]	Discontinued	Discontinued[201]	R4112466[54]	N/A	-	-
Discontinued[186]		R427178X	R427179X[37]	Discontinued	Discontinued	-	-	-	-
N/A	1-3/4 "	201179X	201180X	SP7873S	SP7880S[204]	-	-	N/A	N/A
N/A	1-3/4 "	201183X	201184X[329]	SP7873S	NR	-	-	N/A	N/A
Discontinued[186]		R427178X	R427179X[37]	Discontinued	Discontinued	-	-	-	-
									CF800, 8000 SERIES: CARGO, CAB FORWARD DESIGN
Discontinued[186]		R427178X	R427179X[37]	Discontinued	Discontinued[201]	R4112466[54]	N/A	-	-
Discontinued[186]		R427178X	R427179X[37]	Discontinued	Discontinued[201]	R4112466[54]	N/A	-	-
Discontinued[186]		R427178X	R427179X[37]	Discontinued	Discontinued[201]	R4112466[54]	N/A	-	-
N/A	1-3/4 "	201183X	201184X[329]	SP7873S	NR	-	-	N/A	N/A
N/A	1-3/4 "	201179X	201180X	SP7873S	SP7880S[204]	-	-	N/A	N/A

MAKE MODEL YEAR AXLE CODE AXLE WEIGHT	AXLE & BRK. TYPE	BRK. MFG.	BRAKE SIZE	FMSI	MERITOR DISC PAD OR BRAKE SHOE	MERITOR GUIDE PIN OR RETURN SPRING KIT	MERITOR CALIPER HWD. KIT OR RETURN SPRING KIT	MERITOR ADJUSTER KIT (LEFT WHEEL)	MERITOR ADJUSTER KIT (RIGHT WHEEL)
FORD(Cont.)									
CF800, 8000 SERIES: CARGO, CAB FORWARD DESIGN(Cont.)									
1988									
	Fd				MD379	R407182	R40H5536[146]	NR	NR
	Ra	LG	15 " x 7 "	4505A - 544	N/A	R40H618	NR	SP7887S	SP7887S
	Ra	LG	15 " x 7 "	4505A - 544	N/A	R40H618	NR	NR	NR
1987									
	Fd				MD379	R407182	R40H5536[146]	NR	NR
	Ra	LG	15 " x 7 "	4505A - 544	N/A	R40H618	NR	NR	NR
	Ra	LG	15 " x 7 "	4505A - 544	N/A	R40H618	NR	SP7887S	SP7887S
1986									
	Fd				MD379	R407182	R40H5536[146]	NR	NR
	Ra	LG	15 " x 7 "	4505A - 544	N/A	R40H618	NR	SP7887S	SP7887S
	Ra	LG	15 " x 7 "	4505A - 544	N/A	R40H618	NR	NR	NR
1985									
	Fd				MD379	R407182	R40H5536[146]	NR	NR
E200, E250 SERIES VAN-3/4 TON									
1998									
	Fd			7535 - D655	MD655	R40H5735	R40H5864	NR	NR
	Fd			7535 - D655	MD655	R40H5735	R40H5864	NR	NR
	Fd			7535 - D655	MD655	R40H5735	R40H5864	NR	NR
	Fd			7535 - D655	MD655	R40H5735	R40H5864	NR	NR
	Ra		12 " x 3 "	2140T - 314	R46358	R40H608	R40H4087	R40H2598	R40H2599
	Ra		12 " x 3 "	2140T - 314	R46358	R40H608	R40H4087	R40H2598	R40H2599
	Ra	BX	12 " x 2-1/2 "	2146AT - 316	R46357	R40H546	R40H4087	R40H2598	R40H2599
	Ra	BX	12 " x 2-1/2 "	2146AT - 316	R46357	R40H546	R40H4087	R40H2598	R40H2599
	Ra	BX	12 " x 3 "	2140T - 314	R46358	R40H608	R40H4087	R40H2598	R40H2599
	Ra	BX	12 " x 3 "	2140T - 314	R46358	R40H608	R40H4087	R40H2598	R40H2599
1997									
	Fd			7535 - D655	MD655	R40H5735	R40H5864	NR	NR
	Fd			7535 - D655	MD655	R40H5735	R40H5864	NR	NR
	Fd			7535 - D655	MD655	R40H5735	R40H5864	NR	NR
	Fd			7535 - D655	MD655	R40H5735	R40H5864	NR	NR
	Ra		12 " x 3 "	2140T - 314	R46358	R40H608	R40H4087	R40H2598	R40H2599
	Ra		12 " x 3 "	2140T - 314	R46358	R40H608	R40H4087	R40H2598	R40H2599
	Ra	BX	12 " x 2-1/2 "	2146AT - 316	R46357	R40H546	R40H4087	R40H2598	R40H2599
	Ra	BX	12 " x 2-1/2 "	2146AT - 316	R46357	R40H546	R40H4087	R40H2598	R40H2599
	Ra	BX	12 " x 3 "	2140T - 314	R46358	R40H608	R40H4087	R40H2598	R40H2599
	Ra	BX	12 " x 3 "	2140T - 314	R46358	R40H608	R40H4087	R40H2598	R40H2599
1996									
	Fd			7535 - D655	MD655	R40H5735	R40H5864	NR	NR
	Fd			7535 - D655	MD655	R40H5735	R40H5864	NR	NR
	Fd			7535 - D655	MD655	R40H5735	R40H5864	NR	NR
	Fd			7535 - D655	MD655	R40H5735	R40H5864	NR	NR
	Ra		12 " x 3 "	2140T - 314	R46358	R40H608	R40H4087	R40H2598	R40H2599
	Ra	BX	12 " x 2-1/2 "	2146AT - 316	R46357	R40H546	R40H4087	R40H2598	R40H2599
	Ra	BX	12 " x 2-1/2 "	2146AT - 316	R46357	R40H546	R40H4087	R40H2598	R40H2599
	Ra	BX	12 " x 3 "	2140T - 314	R46358	R40H608	R40H4087	R40H2598	R40H2599
1995									
	Fd			7535 - D655	MD655	R40H5735	R40H5864	NR	NR
	Fd			7535 - D655	MD655	R40H5735	R40H5864	NR	NR
	Fd			7535 - D655	MD655	R40H5735	R40H5864	NR	NR
	Fd			7535 - D655	MD655	R40H5735	R40H5864	NR	NR
	Ra		12 " x 3 "	2140T - 314	R46358	R40H608	R40H4087	R40H2598	R40H2599
	Ra	BX	12 " x 2-1/2 "	2146AT - 316	R46357	R40H546	R40H4087	R40H2598	R40H2599
	Ra	BX	12 " x 2-1/2 "	2146AT - 316	R46357	R40H546	R40H4087	R40H2598	R40H2599
	Ra	BX	12 " x 3 "	2140T - 314	R46358	R40H608	R40H4087	R40H2598	R40H2599
1994									
	Fd			7436 - D557	MD557	R40H15039	R40H5815	NR	NR
	Fd			7436 - D557	MD557	R40H15039	R40H5815	NR	NR
	Fd			7436 - D557	MD557	R40H15039	R40H5815	NR	NR
	Fd			7436 - D557	MD557	R40H15039	R40H5815	NR	NR
	Ra		12 " x 3 "	2140T - 314	R46358	R40H608	R40H4087	R40H2598	R40H2599
	Ra		12 " x 3 "	2140T - 314	R46358	R40H608	R40H4087	R40H2598	R40H2599
	Ra	BX	12 " x 2-1/2 "	2146AT - 316	R46357	R40H546	R40H4087	R40H2598	R40H2599
1993									
	Fd			7436 - D557	MD557	R40H15039	R40H5815	NR	NR

37 - Also available as a New unit
97 - Rear Wheel Antilock Brakes
186 - 10 Stud
54 - Manual Brakes
146 - Use E-7181 for Disc Pad Retainer
201 - Steel Piston
85 - 4 Wheel Antilock Brakes
161 - 8 Stud
204 - Right Hand; use E-4057 for Left Hand Expander Kits

MERITOR DRUM OR ROTOR NO.	CALIPER OR CYLINDER BORE SIZE	MERITOR CALIPER OR WHEEL CYLINDER (LEFT)	MERITOR CALIPER OR WHEEL CYLINDER (RIGHT)	MERITOR CALIPER OR WHEEL CYLINDER REPAIR KIT	MERITOR CALIPER PISTON	MERITOR MASTER CYLINDER	MERITOR MASTER CYLINDER KIT	MERITOR BRAKE HOSE (LEFT)	MERITOR BRAKE HOSE (RIGHT)
									FORD(Cont.)
									CF800, 8000 SERIES: CARGO, CAB FORWARD DESIGN(Cont.)
Discontinued[186]		R427178X	R427179X[37]	Discontinued	Discontinued[201]	R4112466[54]	N/A	-	-
N/A	1-3/4 "	201183X	201184X[329]	SP7873S	NR	-	-	N/A	N/A
N/A	1-3/4 "	201179X	201180X	SP7873S	SP7880S[204]	-	-	N/A	N/A
Discontinued[186]		R427178X	R427179X[37]	Discontinued	Discontinued[201]	R4112466[54]	N/A	-	-
N/A	1-3/4 "	201179X	201180X	SP7873S	SP7880S[204]	-	-	N/A	N/A
N/A	1-3/4 "	201183X	201184X[329]	SP7873S	NR	-	-	N/A	N/A
Discontinued[186]		R427178X	R427179X[37]	Discontinued	Discontinued[201]	R4112466[54]	N/A	-	-
N/A	1-3/4 "	201183X	201184X[329]	SP7873S	NR	-	-	N/A	N/A
N/A	1-3/4 "	201179X	201180X	SP7873S	SP7880S[204]	-	-	N/A	N/A
Discontinued[186]		R427178X	R427179X[37]	Discontinued	Discontinued[201]	R4112466[54]	N/A	-	-
									E200, E250 SERIES VAN-3/4 TON
R44145049[381]	2-11/32 "	R42R55749	R42R55748	R4011237	R44141808	R4113284[362]	N/A	R4578333[97]	R4578332
R44145049[381]	2-11/32 "	R42R55749	R42R55748	R4011237	R44141808	R4113282[361]	N/A	R4578333[97]	R4578332
R44145057[85]	2-11/32 "	R42R55749	R42R55748	R4011237	R44141808	R4113282[361]	N/A	R4578331[85]	R4578332
R44145057[85]	2-11/32 "	R42R55749	R42R55748	R4011237	R44141808	R4113284[362]	N/A	R4578331[85]	R4578332
R44140675[161]	1-3/16 "	R4133945	R4133946	R418188	NR	-	-	-	-
R44140675[161]	1-3/16 "	R4133945	R4133946	R418188	NR	-	-	-	-
R44140675[161]	1 "	R4133004	R4133004	R4166822	NR	-	-	-	-
R44140675[161]	1 "	R4133004	R4133004	R4166822	NR	-	-	-	-
R44140675[161]	1-1/8 "	R4133614	R4133615	R4166935	NR	-	-	-	-
R44140675[161]	1-1/8 "	R4133614	R4133615	R4166935	NR	-	-	-	-
R44145049[381]	2-11/32 "	R42R55749	R42R55748	R4011237	R44141808	R4113284[362]	N/A	R4578333[97]	R4578332
R44145057[85]	2-11/32 "	R42R55749	R42R55748	R4011237	R44141808	R4113284[362]	N/A	R4578331[85]	R4578332
R44145057[85]	2-11/32 "	R42R55749	R42R55748	R4011237	R44141808	R4113282[361]	N/A	R4578331[85]	R4578332
R44145049[381]	2-11/32 "	R42R55749	R42R55748	R4011237	R44141808	R4113282[361]	N/A	R4578333[97]	R4578332
R44140675[161]	1-3/16 "	R4133945	R4133946	R418188	NR	-	-	-	-
R44140675[161]	1-3/16 "	R4133945	R4133946	R418188	NR	-	-	-	-
R44140675[161]	1 "	R4133004	R4133004	R4166822	NR	-	-	-	-
R44140675[161]	1 "	R4133004	R4133004	R4166822	NR	-	-	-	-
R44140675[161]	1-1/8 "	R4133614	R4133615	R4166935	NR	-	-	-	-
R44140675[161]	1-1/8 "	R4133614	R4133615	R4166935	NR	-	-	-	-
R44145049[381]	2-11/32 "	R42R55749	R42R55748	R4011237	R44141808	R4112842[229]	N/A	R4578333[97]	R4578332
R44145049[381]	2-11/32 "	R42R55749	R42R55748	R4011237	R44141808	R4112842[229]	N/A	R4578333[97]	R4578332
R44145057[85]	2-11/32 "	R42R55749	R42R55748	R4011237	R44141808	R4112198[217]	N/A	R4578331[85]	R4578332
R44145057[85]	2-11/32 "	R42R55749	R42R55748	R4011237	R44141808	R4112198[217]	N/A	R4578331[85]	R4578332
N/A	1-3/16 "	R4133945	R4133946	R418188	NR	-	-	R4578305	R4578305
N/A	1 "	R4133004	R4133004	R4166822	NR	-	-	R4578305	R4578305
N/A	1 "	R4133004	R4133004	R4166822	NR	-	-	R4578305	R4578305
R44140675[161]	1-1/8 "	R4133614	R4133615	R4166935	NR	-	-	R4578305	R4578305
R44145057[85]	2-11/32 "	R42R55749	R42R55748	R4011237	R44141808	R4112198[217]	N/A	R4578331[85]	R4578332
R44145057[85]	2-11/32 "	R42R55749	R42R55748	R4011237	R44141808	R4112198[217]	N/A	R4578331[85]	R4578332
R44145049[381]	2-11/32 "	R42R55749	R42R55748	R4011237	R44141808	R4112842[229]	N/A	R4578333[97]	R4578332
R44145049[381]	2-11/32 "	R42R55749	R42R55748	R4011237	R44141808	R4112842[229]	N/A	R4578333[97]	R4578332
N/A	1-3/16 "	R4133945	R4133946	R418188	NR	-	-	R4578305	R4578305
N/A	1 "	R4133004	R4133004	R4166822	NR	-	-	R4578305	R4578305
N/A	1 "	R4133004	R4133004	R4166822	NR	-	-	R4578305	R4578305
R44140675[161]	1-1/8 "	R4133614	R4133615	R4166935	NR	-	-	R4578305	R4578305
R44141934	2-13/64 "	R42R55637	R42R55636	R4066209	R4090192P	R4112842[229]	N/A	R4578208[253]	R4578209
R44141934	2-13/64 "	R42R55637	R42R55636	R4066209	R4090192P	R4112198[217]	N/A	R4578208[253]	R4578209
R44141917	2-13/64 "	R42R55637	R42R55636	R4066209	R4090192P	R4112198[217]	N/A	R4578208[253]	R4578209
R44141917	2-13/64 "	R42R55637	R42R55636	R4066209	R4090192P	R4112842[229]	N/A	R4578208[253]	R4578209
R44140493	1-1/16 "	R4133595	R4133596	R4166821	NR	-	-	R4578305	R4578305
R44140493	1-3/16 "	R4133945	R4133946	R418188	NR	-	-	R4578305	R4578305
R44140493	1 "	R4133004	R4133004	R4166822	NR	-	-	R4578305	R4578305
R44141934	2-13/64 "	R42R55637	R42R55636	R4066209	R4090192P	R4112198[217]	N/A	R4578208[253]	R4578209

217 - Power Brakes Except Speed Control
229 - Speed Control
253 - Single Rear Wheels, 4 Wheel Antilock Brakes
329 - Forward
361 - Van, Speed Control, Single Rear Wheels
362 - Van, Except Speed Control
381 - Rotor and Hub One Piece Assembly W/O ABS Ring

MAKE MODEL YEAR AXLE CODE AXLE WEIGHT	AXLE & BRK. TYPE	BRK. MFG.	BRAKE SIZE	FMSI	MERITOR DISC PAD OR BRAKE SHOE	MERITOR GUIDE PIN OR RETURN SPRING KIT	MERITOR CALIPER HWD. KIT OR RETURN SPRING KIT	MERITOR ADJUSTER KIT (LEFT WHEEL)	MERITOR ADJUSTER KIT (RIGHT WHEEL)
FORD(Cont.)									
E200, E250 SERIES VAN-3/4 TON(Cont.)									
1993									
	Fd			7436 - D557	MD557	R40H15039	R40H5815	NR	NR
	Fd			7436 - D557	MD557	R40H15039	R40H5815	NR	NR
	Fd			7436 - D557	MD557	R40H15039	R40H5815	NR	NR
	Ra		12 " x 3 "	2140T - 314	R46358	R40H608	R40H4087	R40H2598	R40H2599
	Ra		12 " x 3 "	2140T - 314	R46358	R40H608	R40H4087	R40H2598	R40H2599
	Ra	BX	12 " x 2-1/2 "	2146AT - 316	R46357	R40H546	R40H4087	R40H2598	R40H2599
1992									
	Fd			7436 - D557	MD557	R40H15039	R40H5815	NR	NR
	Fd			7436 - D557	MD557	R40H15039	R40H5815	NR	NR
	Fd			7436 - D557	MD557	R40H15039	R40H5815	NR	NR
	Fd			7436 - D557	MD557	R40H15039	R40H5815	NR	NR
	Ra		12 " x 3 "	2140T - 314	R46358	R40H608	R40H4087	R40H2598	R40H2599
	Ra		12 " x 3 "	2140T - 314	R46358	R40H608	R40H4087	R40H2598	R40H2599
	Ra	BX	12 " x 2-1/2 "	2146AT - 316	R46357	R40H546	R40H4087	R40H2598	R40H2599
1991									
	Fd	DN		7330 - D450	MD450	R407130	60050135	NR	NR
	Fd	DN		7054 - D120	MD120	R407130	60050135	NR	NR
	Fd	DN		7054 - D120	MD120	R407130	60050135	NR	NR
	Fd	DN		7330 - D450	MD450	R407130	60050135	NR	NR
	Fd	DN		7330 - D450	MD450	R407130	60050135	NR	NR
	Fd	DN		7330 - D450	MD450	R407130	60050135	NR	NR
	Fd	DN		7054 - D120	MD120	R407130	60050135	NR	NR
	Fd	DN		7054 - D120	MD120	R407130	60050135	NR	NR
	Ra	BX	12 " x 3 "	2140AT - 358	R46358	R40H608	R40H7181	R40H2598	R40H2599
	Ra	BX	12 " x 3 "	2140AT - 358	R46358	R40H608	R40H7181	R40H2598	R40H2599
	Ra	BX	12.125 x 3-1/2 "	2171T - 583	R468140	R40H608	R40H7299	R40H2598	R40H2599
	Ra	BX	12.125 x 3-1/2 "	2171T - 583	R468140	R40H608	R40H7299	R40H2598	R40H2599
	Ra	BX	12.125 x 3-1/2 "	2171T - 583	R468140	R40H608	R40H7299	R40H2598	R40H2599
	Ra	BX	12.125 x 3-1/2 "	2171T - 583	R468140	R40H608	R40H7299	R40H2598	R40H2599
1990									
	Ra	BX	12 " x 2-1/2 "	2146AT - 357	R46357	R40H546	R40H7146	R40H2598	R40H2599
	Ra	BX	12 " x 2-1/2 "	2146AT - 357	R46357	R40H546	R40H7146	R40H2598	R40H2599
	Ra	BX	12 " x 3 "	2140AT - 358	R46358	R40H608	R40H7181	R40H2598	R40H2599
Below 7,000 lb. GVW	Fd	DN		7330 - D450	MD450	R407130	60050135	NR	NR
Over 7,000 lb. GVW	Fd	DN		7330 - D450	MD450	R407130	60050135	NR	NR
1989									
	Fd	DN		7330 - D450	MD450	R407130	60050135	NR	NR
	Fd	DN		7330 - D450	MD450	R407130	60050135	NR	NR
	Ra	BX	12 " x 2-1/2 "	2146AT - 357	R46357	R40H546	R40H7146	R40H2598	R40H2599
	Ra	BX	12 " x 2-1/2 "	2146AT - 357	R46357	R40H546	R40H7146	R40H2598	R40H2599
	Ra	BX	12 " x 3 "	2140AT - 358	R46358	R40H608	R40H7181	R40H2598	R40H2599
1988									
	Fd	DN		7054 - D120	MD120	R407130	60050135	NR	NR
	Fd	DN		7054 - D120	MD120	R407130	60050135	NR	NR
	Fd	DN		7054 - D120	MD120	R407130	60050135	NR	NR
	Fd	DN		7054 - D120	MD120	R407130	60050135	NR	NR
	Ra	BX	12 " x 3 "	2140AT - 358	R46358	R40H608	R40H7181	R40H2598	R40H2599
	Ra	BX	12 " x 3 "	2140AT - 358	R46358	R40H608	R40H7181	R40H2598	R40H2599
	Ra	BX	12.125 x 3-1/2 "	2171T - 583	R468140	R40H608	R40H7299	R40H2598	R40H2599
	Ra	BX	12.125 x 3-1/2 "	2171T - 583	R468140	R40H608	R40H7299	R40H2598	R40H2599
	Ra	BX	12.125 x 3-1/2 "	2171T - 583	R468140	R40H608	R40H7299	R40H2598	R40H2599
	Ra	BX	12.125 x 3-1/2 "	2171T - 583	R468140	R40H608	R40H7299	R40H2598	R40H2599
1987									
	Fd	DN		7054 - D120	MD120	R407130	60050135	NR	NR
	Fd	DN		7054 - D120	MD120	R407130	60050135	NR	NR
	Fd	DN		7054 - D120	MD120	R407130	60050135	NR	NR
	Fd	DN		7054 - D120	MD120	R407130	60050135	NR	NR
	Ra	BX	12 " x 3 "	2140AT - 358	R46358	R40H608	R40H7181	R40H2598	R40H2599
	Ra	BX	12 " x 3 "	2140AT - 358	R46358	R40H608	R40H7181	R40H2598	R40H2599
	Ra	BX	12.125 x 3-1/2 "	2171T - 583	R468140	R40H608	R40H7299	R40H2598	R40H2599
	Ra	BX	12.125 x 3-1/2 "	2171T - 583	R468140	R40H608	R40H7299	R40H2598	R40H2599
	Ra	BX	12.125 x 3-1/2 "	2171T - 583	R468140	R40H608	R40H7299	R40H2598	R40H2599
	Ra	BX	12.125 x 3-1/2 "	2171T - 583	R468140	R40H608	R40H7299	R40H2598	R40H2599
1986									
	Fd	DN		7054 - D120	MD120	R407130	60050135	NR	NR

41 - Aluminum piston
181 - Rotor Only, Machine Rotor After Re-hub
197 - 8.80", 10.25" Ring Gear
54 - Manual Brakes
189 - Single Rear Wheels, 10 1/4" Ring Gear
211 - Manual Brakes, Stripped Chassis Except Speed Control
148 - With 10 1/2" Ring Gear
195 - 7.50", 9.75" Ring Gear
217 - Power Brakes Except Speed Control

MERITOR DRUM OR ROTOR NO.	CALIPER OR CYLINDER BORE SIZE	MERITOR CALIPER OR WHEEL CYLINDER (LEFT)	MERITOR CALIPER OR WHEEL CYLINDER (RIGHT)	MERITOR CALIPER OR WHEEL CYLINDER REPAIR KIT	MERITOR CALIPER PISTON	MERITOR MASTER CYLINDER	MERITOR MASTER CYLINDER KIT	MERITOR BRAKE HOSE (LEFT)	MERITOR BRAKE HOSE (RIGHT)
									FORD(Cont.)
									E200, E250 SERIES VAN-3/4 TON(Cont.)
R44141917	2-13/64 "	R42R55637	R42R55636	R4066209	R4090192P	R4112842[229]	N/A	R4578208[253]	R4578209
R44141934	2-13/64 "	R42R55637	R42R55636	R4066209	R4090192P	R4112842[229]	N/A	R4578208[253]	R4578209
R44141917	2-13/64 "	R42R55637	R42R55636	R4066209	R4090192P	R4112198[217]	N/A	R4578208[253]	R4578209
R44140493	1-3/16 "	R4133945	R4133946	R418188	NR	-	-	R4578305	R4578305
R44140493	1-1/16 "	R4133595	R4133596	R4166821	NR	-	-	R4578305	R4578305
R44140493	1 "	R4133004	R4133004	R4166822	NR	-	-	R4578305	R4578305
R44141917	2-13/64 "	R42R55637	R42R55636	R4066209	R4090192P	R4112198[217]	N/A	R4578208[253]	R4578209
R44141917	2-13/64 "	R42R55637	R42R55636	R4066209	R4090192P	R4112842[229]	N/A	R4578208[253]	R4578209
R44141934	2-13/64 "	R42R55637	R42R55636	R4066209	R4090192P	R4112198[217]	N/A	R4578208[253]	R4578209
R44141934	2-13/64 "	R42R55637	R42R55636	R4066209	R4090192P	R4112842[229]	N/A	R4578208[253]	R4578209
R44140493	1-3/16 "	R4133945	R4133946	R418188	NR	-	-	R4578305	R4578305
R44140493	1-1/16 "	R4133595	R4133596	R4166821	NR	-	-	R4578305	R4578305
R44140493	1 "	R4133004	R4133004	R4166822	NR	-	-	R4578305	R4578305
R44141127[181]	2-3/16 "	R42R55461P	R42R55460P	R4166713	R4090180P[290]	R4112197[225]	N/A	R4577312[256]	R4577309
R44141487[381]	2-3/16 "	R42R55456	R42R55456	R4166713	R4090029[41]	R4112197[225]	N/A	R4577312[256]	R4577309
R44141487[381]	2-3/16 "	R42R55456	R42R55456	R4166713	R4090029[41]	R4112200[211]	N/A	R4577312[256]	R4577309
R44141487[381]	2-3/16 "	R42R55461P	R42R55460P	R4166713	R4090180P[290]	R4112200[211]	N/A	R4577312[256]	R4577309
R44141127[181]	2-3/16 "	R42R55461P	R42R55460P	R4166713	R4090180P[290]	R4112200[211]	N/A	R4577312[256]	R4577309
R44141487[381]	2-3/16 "	R42R55461P	R42R55460P	R4166713	R4090180P[290]	R4112197[225]	N/A	R4577312[256]	R4577309
R44141127[181]	2-3/16 "	R42R55456	R42R55456	R4166713	R4090029[41]	R4112200[211]	N/A	R4577312[256]	R4577309
R44141127[181]	2-3/16 "	R42R55456	R42R55456	R4166713	R4090029[41]	R4112197[225]	N/A	R4577312[256]	R4577309
R44140504[189]	1-3/16 "	R4133945	R4133946	R418188	NR	-	-	R4578610[256]	R4578610
R44140504[189]	1 "	R4133725	R4133726	R4166822	NR	-	-	R4578610[256]	R4578610
R44140545[148]	1-1/8 "	R4133206	R4133206	R4166935	NR	-	-	R4578610[256]	R4578610
R44140545[148]	1-1/8 "	R4133206	R4133206	R4166935	NR	-	-	R4578610[256]	R4578610
R44140545[148]	1-1/16 "	R4133595	R4133596	R4166821	NR	-	-	R4578610[256]	R4578610
R44140545[148]	1-1/16 "	R4133595	R4133596	R4166821	NR	-	-	R4578610[256]	R4578610
R44140397[195]	1 "	R4133004	R4133004	R4166822	NR	-	-	R4578610[256]	R4578610
R44140520[197]	1 "	R4133004	R4133004	R4166822	NR	-	-	R4578610[256]	R4578610
R44140504[189]	1 "	R4133725	R4133726	R4166822	NR	-	-	R4578610[256]	R4578610
R44141487[381]	2-3/16 "	R42R55461	R42R55460	R4166713	R4090029[290]	R4112198[217]	N/A	R4577312[256]	R4577309
R44141487[381]	2-3/16 "	R42R55461	R42R55460	R4166713	R4090029[290]	R148228[54]	N/A	R4577312[256]	R4577309
R44141487[381]	2-3/16 "	R42R55461	R42R55460	R4166713	R4090029[290]	R4112198[217]	N/A	R4577312[256]	R4577309
R44141487[381]	2-3/16 "	R42R55461	R42R55460	R4166713	R4090029[290]	R148228[54]	N/A	R4577312[256]	R4577309
R44140397[195]	1 "	R4133004	R4133004	R4166822	NR	-	-	R4578618	R4578618
R44140520[197]	1 "	R4133004	R4133004	R4166822	NR	-	-	R4578618	R4578618
R44140504[189]	1 "	R4133725	R4133726	R4166822	NR	-	-	R4578618	R4578618
R44141487[381]	2-3/16 "	R42R55456	R42R55456	R4166713	R4090029[41]	R4112200[211]	N/A	R4577312	R4577309
R44141487[381]	2-3/16 "	R42R55456	R42R55456	R4166713	R4090029[41]	R4112197[225]	N/A	R4577312	R4577309
R44141127[181]	2-3/16 "	R42R55456	R42R55456	R4166713	R4090029[41]	R4112200[211]	N/A	R4577312	R4577309
R44141127[181]	2-3/16 "	R42R55456	R42R55456	R4166713	R4090029[41]	R4112197[225]	N/A	R4577312	R4577309
R44140504[189]	1 "	R4133725	R4133726	R4166822	NR	-	-	R4578610	R4578610
R44140504[189]	1-3/16 "	R4133945	R4133946	R418188	NR	-	-	R4578610	R4578610
R44140545[148]	1-1/16 "	R4133595	R4133596	R4166821	NR	-	-	R4578610	R4578610
R44140545[148]	1-1/16 "	R4133595	R4133596	R4166821	NR	-	-	R4578610	R4578610
R44140545[148]	1-1/8 "	R4133206	R4133206	R4166935	NR	-	-	R4578610	R4578610
R44140545[148]	1-1/8 "	R4133206	R4133206	R4166935	NR	-	-	R4578610	R4578610
R44141127[181]	2-3/16 "	R42R55456	R42R55456	R4166713	R4090029[41]	R4112197[225]	N/A	R4577312	R4577309
R44141127[181]	2-3/16 "	R42R55456	R42R55456	R4166713	R4090029[41]	R4112200[211]	N/A	R4577312	R4577309
R44141487[381]	2-3/16 "	R42R55456	R42R55456	R4166713	R4090029[41]	R4112200[211]	N/A	R4577312	R4577309
R44141487[381]	2-3/16 "	R42R55456	R42R55456	R4166713	R4090029[41]	R4112197[225]	N/A	R4577312	R4577309
R44140504[189]	1-3/16 "	R4133945	R4133946	R418188	NR	-	-	R4578610	R4578610
R44140504[189]	1 "	R4133725	R4133726	R4166822	NR	-	-	R4578610	R4578610
R44140545[148]	1-1/16 "	R4133595	R4133596	R4166821	NR	-	-	R4578610	R4578610
R44140545[148]	1-1/8 "	R4133206	R4133206	R4166935	NR	-	-	R4578610	R4578610
R44140545[148]	1-1/16 "	R4133595	R4133596	R4166821	NR	-	-	R4578610	R4578610
R44140545[148]	1-1/8 "	R4133206	R4133206	R4166935	NR	-	-	R4578610	R4578610
R44141487[381]	2-3/16 "	R42R55456	R42R55456	R4166713	R4090029[41]	R4112197[225]	N/A	R4577312	R4577309

225 - Cutaway, Stripped Chassis Except Speed Control
229 - Speed Control
253 - Single Rear Wheels, 4 Wheel Antilock Brakes
256 - Dual Rear Wheels after 3/91
290 - Use E-11222 for High Temperature Boots
381 - Rotor and Hub One Piece Assembly W/O ABS Ring

MAKE MODEL YEAR AXLE CODE AXLE WEIGHT	AXLE & BRK. TYPE	BRK. MFG.	BRAKE SIZE	FMSI	MERITOR DISC PAD OR BRAKE SHOE	MERITOR GUIDE PIN OR RETURN SPRING KIT	MERITOR CALIPER HWD. KIT OR RETURN SPRING KIT	MERITOR ADJUSTER KIT (LEFT WHEEL)	MERITOR ADJUSTER KIT (RIGHT WHEEL)
FORD(Cont.)									
E200, E250 SERIES VAN-3/4 TON(Cont.)									
1986									
	Fd	DN		7054 - D120	MD120	R407130	60050135	NR	NR
	Fd	DN		7054 - D120	MD120	R407130	60050135	NR	NR
	Fd	DN		7054 - D120	MD120	R407130	60050135	NR	NR
	Ra	BX	12 " x 3 "	2140AT - 358	R46358	R40H608	R40H7181	R40H2598	R40H2599
	Ra	BX	12 " x 3 "	2140AT - 358	R46358	R40H608	R40H7181	R40H2598	R40H2599
	Ra	BX	12.125 x 3-1/2 "	2171T - 583	R468140	R40H608	R40H7299	R40H2598	R40H2599
	Ra	BX	12.125 x 3-1/2 "	2171T - 583	R468140	R40H608	R40H7299	R40H2598	R40H2599
	Ra	BX	12.125 x 3-1/2 "	2171T - 583	R468140	R40H608	R40H7299	R40H2598	R40H2599
	Ra	BX	12.125 x 3-1/2 "	2171T - 583	R468140	R40H608	R40H7299	R40H2598	R40H2599
1985									
	Fd	DN		7054 - D120	MD120	R40H05025	60050135	NR	NR
	Fd	DN		7054 - D120	MD120	R40H05025	60050135	NR	NR
	Ra	BX	12 " x 3 "	2140AT - 358	R46358	R40H608	R40H7181	R40H2598	R40H2599
	Ra	BX	12 " x 3 "	2140AT - 358	R46358	R40H608	R40H7181	R40H2598	R40H2599
	Ra	BX	12 " x 3 "	2140AT - 358	R46358	R40H608	R40H7181	R40H2598	R40H2599
	Ra	BX	12 " x 3 "	2140AT - 358	R46358	R40H608	R40H7181	R40H2598	R40H2599
	Ra	BX	12 " x 3 "	2140AT - 358	R46358	R40H608	R40H7181	R40H2598	R40H2599
	Ra	BX	12 " x 3 "	2140AT - 358	R46358	R40H608	R40H7181	R40H2598	R40H2599
1984									
	Fd	DN		7054 - D120	MD120	R40H05025	60050135	NR	NR
	Fd	DN		7054 - D120	MD120	R40H05025	60050135	NR	NR
	Ra	BX	12 " x 3 "	2140AT - 358	R46358	R40H608	R40H7181	R40H2598	R40H2599
	Ra	BX	12 " x 3 "	2140AT - 358	R46358	R40H608	R40H7181	R40H2598	R40H2599
	Ra	BX	12 " x 3 "	2140AT - 358	R46358	R40H608	R40H7181	R40H2598	R40H2599
1983									
	Fd	DN		7054 - D120	MD120	R40H05025	60050135	NR	NR
	Fd	DN		7054 - D120	MD120	R40H05025	60050135	NR	NR
	Ra	BX	12 " x 3 "	2140AT - 358	R46358	R40H608	R40H7181	R40H2598	R40H2599
	Ra	BX	12 " x 3 "	2140AT - 358	R46358	R40H608	R40H7181	R40H2598	R40H2599
	Ra	BX	12 " x 3 "	2140AT - 358	R46358	R40H608	R40H7181	R40H2598	R40H2599
1982									
	Fd	DN		7054 - D120	MD120	R40H05025	60050135	NR	NR
	Fd	DN		7054 - D120	MD120	R40H05025	60050135	NR	NR
	Fd	DN		7054 - D120	MD120	R40H05025	60050135	NR	NR
	Ra	BX	12 " x 3 "	2140AT - 358	R46358	R40H608	R40H7181	R40H2598	R40H2599
	Ra	BX	12 " x 3 "	2140AT - 358	R46358	R40H608	R40H7181	R40H2598	R40H2599
	Ra	BX	12 " x 3 "	2140AT - 358	R46358	R40H608	R40H7181	R40H2598	R40H2599
	Ra	BX	12 " x 3 "	2140AT - 358	R46358	R40H608	R40H7181	R40H2598	R40H2599
1981									
	Fd	DN		7054 - D120	MD120	R40H05025	60050135	NR	NR
	Fd	DN		7054 - D120	MD120	R40H05025	60050135	NR	NR
	Ra	BX	12 " x 3 "	2140AT - 358	R46358	R40H608	R40H7181	R40H2598	R40H2599
1980									
	Fd	DN		7054 - D120	MD120	R40H05025	60050135	NR	NR
	Ra	BX	12 " x 3 "	2140AT - 358	R46358	R40H608	R40H7181	R40H2598	R40H2599
1979									
	Fd	DN		7054 - D120	MD120	R40H05025	60050135	NR	NR
	Ra	BX	12 " x 3 "	2140AT - 358	R46358	R40H608	R40H7181	R40H2598	R40H2599
1978									
	Fd	DN		7054 - D120	MD120	R40H05025	60050135	NR	NR
	Ra	BX	12 " x 3 "	2140AT - 358	R46358	R40H608	R40H7181	R40H2598	R40H2599
1977									
	Fd	DN		7054 - D120	MD120	R40H05025	60050135	NR	NR
	Ra	BX	12 " x 3 "	2140AT - 358	R46358	R40H608	R40H7181	R40H2598	R40H2599
1976									
	Fd	DN		7054 - D120	MD120	R40H05025	60050135	NR	NR
	Ra	BX	12 " x 3 "	2140AT - 358	R46358	R40H546	R40H7146	R40H2598	R40H2599
1975									
	Fd	DN		7054 - D120	MD120	R40H05025	60050135	NR	NR
	Ra	BX	12 " x 3 "	2140AT - 358	R46358	R40H546	R40H7146	R40H2598	R40H2599
E250 SERIES VAN-3/4 TON									
2005									
	Fd	TRW		7535 - D655	MD655	NR	R4012262	NR	NR

41 - Aluminum piston
148 - With 10 1/2" Ring Gear
189 - Single Rear Wheels, 10 1/4" Ring Gear
54 - Manual Brakes
167 - Except 10 1/4" Ring Gear
211 - Manual Brakes, Stripped Chassis Except Speed Control
85 - 4 Wheel Antilock Brakes
181 - Rotor Only, Machine Rotor After Re-hub
225 - Cutaway, Stripped Chassis Except Speed Control

MERITOR DRUM OR ROTOR NO.	CALIPER OR CYLINDER BORE SIZE	MERITOR CALIPER OR WHEEL CYLINDER (LEFT)	MERITOR CALIPER OR WHEEL CYLINDER (RIGHT)	MERITOR CALIPER OR WHEEL CYLINDER REPAIR KIT	MERITOR CALIPER PISTON	MERITOR MASTER CYLINDER	MERITOR MASTER CYLINDER KIT	MERITOR BRAKE HOSE (LEFT)	MERITOR BRAKE HOSE (RIGHT)
FORD(Cont.)									
E200, E250 SERIES VAN-3/4 TON(Cont.)									
R44141487[381]	2-3/16 "	R42R55456	R42R55456	R4166713	R4090029[41]	R4112200[211]	N/A	R4577312	R4577309
R44141127[181]	2-3/16 "	R42R55456	R42R55456	R4166713	R4090029[41]	R4112197[225]	N/A	R4577312	R4577309
R44141127[181]	2-3/16 "	R42R55456	R42R55456	R4166713	R4090029[41]	R4112200[211]	N/A	R4577312	R4577309
R44140504[189]	1-3/16 "	R4133945	R4133946	R418188	NR	-	-	R4578610	R4578610
R44140504[189]	1 "	R4133725	R4133726	R4166822	NR	-	-	R4578610	R4578610
R44140545[148]	1-1/16 "	R4133595	R4133596	R4166821	NR	-	-	R4578610	R4578610
R44140545[148]	1-1/16 "	R4133595	R4133596	R4166821	NR	-	-	R4578610	R4578610
R44140545[148]	1-1/8 "	R4133206	R4133206	R4166935	NR	-	-	R4578610	R4578610
R44140545[148]	1-1/8 "	R4133206	R4133206	R4166935	NR	-	-	R4578610	R4578610
R44141127[181]	2-3/16 "	R42R55412	R42R55411	R4166713	R4090029[41]	R4112008[54]	N/A	R4577312[256]	R4577309
R44141234[381]	2-3/16 "	R42R55412	R42R55411	R4166713	R4090029[41]	R4112008[54]	N/A	R4577312[256]	R4577309
R44140344[167]	1 "	R4133725	R4133726	R4166822	NR	-	-	R4577189	R4577189
R44140504[189]	1 "	R4133725	R4133726	R4166822	NR	-	-	R4577614	R4577614
R44140504[189]	1 "	R4133725	R4133726	R4166822	NR	-	-	R4577189	R4577189
R44140344[167]	1 "	R4133725	R4133726	R4166822	NR	-	-	R4577614	R4577614
R44140278[345]	1-1/8 "	R4133206	R4133207	R418187	NR	-	-	R4577614	R4577614
R44140278[345]	1-1/8 "	R4133206	R4133207	R418187	NR	-	-	R4577189	R4577189
R44141127[181]	2-3/16 "	R42R55412	R42R55411	R4166713	R4090029[41]	R4112008[54]	N/A	R4577312[256]	R4577309
R44141234[381]	2-3/16 "	R42R55412	R42R55411	R4166713	R4090029[41]	R4112008[54]	N/A	R4577312[256]	R4577309
R44140278[345]	1-1/8 "	R4133206	R4133207	R418187	NR	-	-	R4577189	R4577189
R44140344[167]	1 "	R4133725	R4133726	R4166822	NR	-	-	R4577189	R4577189
R44140504[189]	1 "	R4133725	R4133726	R4166822	NR	-	-	R4577189	R4577189
R44141127[181]	2-3/16 "	R42R55412	R42R55411	R4166713	R4090029[41]	R4111682[54]	N/A	R4577312[256]	R4577309
R44141234[381]	2-3/16 "	R42R55412	R42R55411	R4166713	R4090029[41]	R4111682[54]	N/A	R4577312[256]	R4577309
R44140344[167]	1 "	R4133725	R4133726	R4166822	NR	-	-	R4577189	R4577189
R44140278[345]	1-1/8 "	R4133206	R4133207	R418187	NR	-	-	R4577189	R4577189
R44140504[189]	1 "	R4133725	R4133726	R4166822	NR	-	-	R4577189	R4577189
R44141127[181]	2-3/16 "	R42R55412	R42R55411	R4166713	R4090029[41]	R4111682[54]	N/A	R4577312[256]	R4577309
R44141234[381]	2-3/16 "	R42R55412	R42R55411	R4166713	R4090029[41]	R4111682[54]	N/A	R4577312[256]	R4577309
N/A	2-3/16 "	R42R55412	R42R55411	R4166713	R4090029[41]	R4111682[54]	N/A	R4577312[256]	R4577309
R44140504[189]	1 "	R4133725	R4133726	R4166822	NR	-	-	R4577189	R4577189
R44140344[167]	1 "	R4133725	R4133726	R4166822	NR	-	-	R4577189	R4577189
R44140278[345]	1-1/8 "	R4133206	R4133207	R418187	NR	-	-	R4577189	R4577189
N/A	1-1/16 "	R4133791	R 418145	R4166821	NR	-	-	R4577189	R4577189
N/A	2-3/16 "	R42R55412	R42R55411	R4166713	R4090029[41]	R4111682[54]	N/A	R4577312[256]	R4577309
N/A	2-3/16 "	R42R55412	R42R55411	R4166713	R4090029[41]	R4111682[54]	N/A	R4577312[256]	R4577309
N/A	1-1/16 "	R4133791	R 418145	R4166821	NR	-	-	R4577189	R4577189
N/A	2-3/16 "	R42R55412	R42R55411	R4166713	R4090029[41]	R4111682[54]	N/A	R4577312[256]	R4577309
N/A	1-1/16 "	R4133791	R 418145	R4166821	NR	-	-	R4577189	R4577189
N/A	2-3/16 "	R42R55413	R42R55413	R4166713	R4090029[41]	R4111682[54]	N/A	R4577312[256]	R4577309
N/A	1-1/16 "	R4133791	R 418145	R4166821	NR	-	-	-	-
N/A	2-3/16 "	R42R55413	R42R55413	R4166713	R4090029[41]	R4111682[54]	N/A	R4577312[256]	R4577309
N/A	1-1/16 "	R4133791	R 418145	R4166821	NR	-	-	-	-
-	2-3/16 "	R42R55413	R42R55413	R4166713	R4090029[41]	R4111682[54]	N/A	-	-
-	1-1/16 "	R4133791	R 418145	R4166821	NR	-	-	-	-
-	2-3/16 "	R42R55413	R42R55413	R4166713	R4090029[41]	-	-	-	-
-	1-1/16 "	R4133791	R 418145	R4166821	NR	-	-	-	-
-	2-3/16 "	R42R55456	R42R55456	R4166713	R4090029[41]	-	-	-	-
-	1-1/16 "	R4133791	R 418145	R4166821	NR	-	-	-	-
E250 SERIES VAN-3/4 TON									
R44145057[85]	56mm	R4255749	R4255748	R4012261	R4012260[363]	R4113497[228]	N/A	R4578332[85]	R4578331

228 - Except Speed Control
256 - Dual Rear Wheels after 3/91
345 - Dual Rear Wheels, except 10.25" ring gear
363 - Piston includes Boots and Seals
381 - Rotor and Hub One Piece Assembly W/O ABS Ring

MAKE MODEL YEAR AXLE CODE AXLE WEIGHT	AXLE & BRK. TYPE	BRK. MFG.	BRAKE SIZE	FMSI	MERITOR DISC PAD OR BRAKE SHOE	MERITOR GUIDE PIN OR RETURN SPRING KIT	MERITOR CALIPER HWD. KIT OR RETURN SPRING KIT	MERITOR ADJUSTER KIT (LEFT WHEEL)	MERITOR ADJUSTER KIT (RIGHT WHEEL)
FORD(Cont.)									
E250 SERIES VAN-3/4 TON(Cont.)									
2005									
	Fd	TRW		7535 - D655	MD655	NR	R4012262	NR	NR
	Fd	TRW		7535 - D655	MD655	NR	R4012262	NR	NR
	Fd	TRW		7535 - D655	MD655	NR	R4012262	NR	NR
	Ra	BX	12 " x 2-1/2 "	2146AT - 316	R46357	R40H546	R40H4087	R40H2598	R40H2599
	Rd	TRW		7673 - D802	MVD802	NR	R4012041	NR	NR
DRW	Ra		12 " x 3 "	2140T - 314	R46358	R40H608	R40H4087	R40H2598	R40H2599
SRW	Ra		12 " x 3 "	2140T - 314	R46358	R40H608	R40H4087	R40H2598	R40H2599
2004									
	Fd	TRW		7535 - D655	MD655	NR	R4012262	NR	NR
	Fd	TRW		7535 - D655	MD655	NR	R4012262	NR	NR
	Fd	TRW		7535 - D655	MD655	NR	R4012262	NR	NR
	Fd	TRW		7535 - D655	MD655	NR	R4012262	NR	NR
	Ra	BX	12 " x 2-1/2 "	2146AT - 316	R46357	R40H546	R40H4087	R40H2598	R40H2599
	Rd	TRW		7673 - D802	MVD802	NR	R4012041	NR	NR
DRW	Ra		12 " x 3 "	2140T - 314	R46358	R40H608	R40H4087	R40H2598	R40H2599
SRW	Ra		12 " x 3 "	2140T - 314	R46358	R40H608	R40H4087	R40H2598	R40H2599
2003									
	Fd	TRW		7535 - D655	MD655	NR	R4012262	NR	NR
	Fd	TRW		7535 - D655	MD655	NR	R4012262	NR	NR
	Fd	TRW		7535 - D655	MD655	NR	R4012262	NR	NR
	Fd	TRW		7535 - D655	MD655	NR	R4012262	NR	NR
	Ra	BX	12 " x 2-1/2 "	2146AT - 316	R46357	R40H546	R40H4087	R40H2598	R40H2599
	Rd	TRW		7673 - D802	MVD802	NR	R4012041	NR	NR
DRW	Ra		12 " x 3 "	2140T - 314	R46358	R40H608	R40H4087	R40H2598	R40H2599
SRW	Ra		12 " x 3 "	2140T - 314	R46358	R40H608	R40H4087	R40H2598	R40H2599
2002									
	Fd	TRW		7535 - D655	MD655	NR	R4012262	NR	NR
	Fd	TRW		7535 - D655	MD655	NR	R4012262	NR	NR
	Fd	TRW		7535 - D655	MD655	NR	R4012262	NR	NR
	Fd	TRW		7535 - D655	MD655	NR	R4012262	NR	NR
	Ra	BX	12 " x 2-1/2 "	2146AT - 316	R46357	R40H546	R40H4087	R40H2598	R40H2599
	Rd	TRW		7673 - D802	MVD802	NR	R4012041	NR	NR
DRW	Ra		12 " x 3 "	2140T - 314	R46358	R40H608	R40H4087	R40H2598	R40H2599
SRW	Ra		12 " x 3 "	2140T - 314	R46358	R40H608	R40H4087	R40H2598	R40H2599
2001									
	Fd	TRW		7535 - D655	MD655	NR	R4012262	NR	NR
	Fd	TRW		7535 - D655	MD655	NR	R4012262	NR	NR
	Fd	TRW		7535 - D655	MD655	NR	R4012262	NR	NR
	Fd	TRW		7535 - D655	MD655	NR	R4012262	NR	NR
	Ra	BX	12 " x 2-1/2 "	2146AT - 316	R46357	R40H546	R40H4087	R40H2598	R40H2599
	Rd	TRW		7673 - D802	MVD802	NR	R4012041	NR	NR
DRW	Ra		12 " x 3 "	2140T - 314	R46358	R40H608	R40H4087	R40H2598	R40H2599
SRW	Ra		12 " x 3 "	2140T - 314	R46358	R40H608	R40H4087	R40H2598	R40H2599
2000									
	Fd	TRW		7535 - D655	MD655	NR	R4012262	NR	NR
	Fd	TRW		7535 - D655	MD655	NR	R4012262	NR	NR
	Fd	TRW		7535 - D655	MD655	NR	R4012262	NR	NR
	Fd	TRW		7535 - D655	MD655	NR	R4012262	NR	NR
	Ra	BX	12 " x 2-1/2 "	2146AT - 316	R46357	R40H546	R40H4087	R40H2598	R40H2599
	Rd	TRW		7673 - D802	MVD802	NR	R4012041	NR	NR
DRW	Ra		12 " x 3 "	2140T - 314	R46358	R40H608	R40H4087	R40H2598	R40H2599
SRW	Ra		12 " x 3 "	2140T - 314	R46358	R40H608	R40H4087	R40H2598	R40H2599
1999									
	Fd	TRW		7535 - D655	MD655	NR	R4012262	NR	NR
	Fd	TRW		7535 - D655	MD655	NR	R4012262	NR	NR
	Fd	TRW		7535 - D655	MD655	NR	R4012262	NR	NR
	Fd	TRW		7535 - D655	MD655	NR	R4012262	NR	NR
	Ra	BX	12 " x 2-1/2 "	2146AT - 316	R46357	R40H546	R40H4087	R40H2598	R40H2599
	Rd	TRW		7673 - D802	MVD802	NR	R4012041	NR	NR
DRW	Ra		12 " x 3 "	2140T - 314	R46358	R40H608	R40H4087	R40H2598	R40H2599
SRW	Ra		12 " x 3 "	2140T - 314	R46358	R40H608	R40H4087	R40H2598	R40H2599

85 - 4 Wheel Antilock Brakes
228 - Except Speed Control
381 - Rotor and Hub One Piece Assembly W/O ABS Ring
97 - Rear Wheel Antilock Brakes
229 - Speed Control
405 - Rotor Only
161 - 8 Stud
363 - Piston includes Boots and Seals

MERITOR DRUM OR ROTOR NO.	CALIPER OR CYLINDER BORE SIZE	MERITOR CALIPER OR WHEEL CYLINDER (LEFT)	MERITOR CALIPER OR WHEEL CYLINDER (RIGHT)	MERITOR CALIPER OR WHEEL CYLINDER REPAIR KIT	MERITOR CALIPER PISTON	MERITOR MASTER CYLINDER	MERITOR MASTER CYLINDER KIT	MERITOR BRAKE HOSE (LEFT)	MERITOR BRAKE HOSE (RIGHT)
									FORD(Cont.)
									E250 SERIES VAN-3/4 TON(Cont.)
R44145049[381]	56mm	R4255749	R4255748	R4012261	R4012260[363]	R4113497[228]	N/A	R4578333[97]	R4578331
R44145049[381]	56mm	R4255749	R4255748	R4012261	R4012260[363]	R4113498[229]	N/A	R4578333[97]	R4578331
R44145057[85]	56mm	R4255749	R4255748	R4012261	R4012260[363]	R4113498[229]	N/A	R4578332[85]	R4578331
R44140675[161]	1 "	R4133004	R4133004	R4166822	NR	-	-	R4578305	R4112468
R44145251[405]	45mm	R4255858	R4255857	R4012040	R4012039[363]	-	-	R4578305	R4112468
R44140675[161]	1-3/16 "	R4133945	R4133946	R418188	NR	-	-	R4578305	R4112468
R44140675[161]	1-1/8 "	R4134139	R4134139	R418188	NR	-	-	R4578305	R4112468
R44145057[85]	56mm	R4255749	R4255748	R4012261	R4012260[363]	R4113498[229]	N/A	R4578332[85]	R4578331
R44145049[381]	56mm	R4255749	R4255748	R4012261	R4012260[363]	R4113498[229]	N/A	R4578333[97]	R4578331
R44145057[85]	56mm	R4255749	R4255748	R4012261	R4012260[363]	R4113497[228]	N/A	R4578332[85]	R4578331
R44145049[381]	56mm	R4255749	R4255748	R4012261	R4012260[363]	R4113497[228]	N/A	R4578333[97]	R4578331
R44140675[161]	1 "	R4133004	R4133004	R4166822	NR	-	-	R4578305	R4112468
R44145251[405]	45mm	R4255858	R4255857	R4012040	R4012039[363]	-	-	R4578305	R4112468
R44140675[161]	1-3/16 "	R4133945	R4133946	R418188	NR	-	-	R4578305	R4112468
R44140675[161]	1-1/8 "	R4134139	R4134139	R418188	NR	-	-	R4578305	R4112468
R44145057[85]	56mm	R4255749	R4255748	R4012261	R4012260[363]	R4113497[228]	N/A	R4578332[85]	R4578331
R44145049[381]	56mm	R4255749	R4255748	R4012261	R4012260[363]	R4113497[228]	N/A	R4578333[97]	R4578331
R44145049[381]	56mm	R4255749	R4255748	R4012261	R4012260[363]	R4113498[229]	N/A	R4578333[97]	R4578331
R44145057[85]	56mm	R4255749	R4255748	R4012261	R4012260[363]	R4113498[229]	N/A	R4578332[85]	R4578331
R44140675[161]	1 "	R4133004	R4133004	R4166822	NR	-	-	R4578305	R4112468
R44145251[405]	45mm	R4255858	R4255857	R4012040	R4012039[363]	-	-	R4578305	R4112468
R44140675[161]	1-3/16 "	R4133945	R4133946	R418188	NR	-	-	R4578305	R4112468
R44140675[161]	1-1/8 "	R4134139	R4134139	R418188	NR	-	-	R4578305	R4112468
R44145057[85]	56mm	R4255749	R4255748	R4012261	R4012260[363]	R4113497[228]	N/A	R4578332[85]	R4578331
R44145049[381]	56mm	R4255749	R4255748	R4012261	R4012260[363]	R4113498[229]	N/A	R4578333[97]	R4578331
R44145049[381]	56mm	R4255749	R4255748	R4012261	R4012260[363]	R4113497[228]	N/A	R4578333[97]	R4578331
R44145057[85]	56mm	R4255749	R4255748	R4012261	R4012260[363]	R4113498[229]	N/A	R4578332[85]	R4578331
R44140675[161]	1 "	R4133004	R4133004	R4166822	NR	-	-	R4578305	R4112468
R44145251[405]	45mm	R4255858	R4255857	R4012040	R4012039[363]	-	-	R4578305	R4112468
R44140675[161]	1-3/16 "	R4133945	R4133946	R418188	NR	-	-	R4578305	R4112468
R44140675[161]	1-1/8 "	R4134139	R4134139	R418188	NR	-	-	R4578305	R4112468
R44145049[381]	56mm	R4255749	R4255748	R4012261	R4012260[363]	R4113497[228]	N/A	R4578333[97]	R4578331
R44145057[85]	56mm	R4255749	R4255748	R4012261	R4012260[363]	R4113498[229]	N/A	R4578332[85]	R4578331
R44145049[381]	56mm	R4255749	R4255748	R4012261	R4012260[363]	R4113498[229]	N/A	R4578333[97]	R4578331
R44145057[85]	56mm	R4255749	R4255748	R4012261	R4012260[363]	R4113497[228]	N/A	R4578332[85]	R4578331
R44140675[161]	1 "	R4133004	R4133004	R4166822	NR	-	-	R4578305	R4112468
R44145251[405]	45mm	R4255858	R4255857	R4012040	R4012039[363]	-	-	R4578305	R4112468
R44140675[161]	1-3/16 "	R4133945	R4133946	R418188	NR	-	-	R4578305	R4112468
R44140675[161]	1-1/8 "	R4134139	R4134139	R418188	NR	-	-	R4578305	R4112468
R44145057[85]	56mm	R4255749	R4255748	R4012261	R4012260[363]	R4113498[229]	N/A	R4578332[85]	R4578331
R44145049[381]	56mm	R4255749	R4255748	R4012261	R4012260[363]	R4113497[228]	N/A	R4578333[97]	R4578331
R44145057[85]	56mm	R4255749	R4255748	R4012261	R4012260[363]	R4113497[228]	N/A	R4578332[85]	R4578331
R44145049[381]	56mm	R4255749	R4255748	R4012261	R4012260[363]	R4113498[229]	N/A	R4578333[97]	R4578331
R44140675[161]	1 "	R4133004	R4133004	R4166822	NR	-	-	R4578305	R4112468
R44145251[405]	45mm	R4255858	R4255857	R4012040	R4012039[363]	-	-	R4578305	R4112468
R44140675[161]	1-3/16 "	R4133945	R4133946	R418188	NR	-	-	R4578305	R4112468
R44140675[161]	1-1/8 "	R4134139	R4134139	R418188	NR	-	-	R4578305	R4112468
R44145057[85]	56mm	R4255749	R4255748	R4012261	R4012260[363]	R4113498[229]	N/A	R4578332[85]	R4578331
R44145049[381]	56mm	R4255749	R4255748	R4012261	R4012260[363]	R4113498[229]	N/A	R4578333[97]	R4578331
R44145049[381]	56mm	R4255749	R4255748	R4012261	R4012260[363]	R4113497[228]	N/A	R4578333[97]	R4578331
R44145057[85]	56mm	R4255749	R4255748	R4012261	R4012260[363]	R4113497[228]	N/A	R4578332[85]	R4578331
R44140675[161]	1 "	R4133004	R4133004	R4166822	NR	-	-	R4578305	R4112468
R44145251[405]	45mm	R4255858	R4255857	R4012040	R4012039[363]	-	-	R4578305	R4112468
R44140675[161]	1-3/16 "	R4133945	R4133946	R418188	NR	-	-	R4578305	R4112468
R44140675[161]	1-1/8 "	R4134139	R4134139	R418188	NR	-	-	R4578305	R4112468

MAKE MODEL YEAR AXLE CODE AXLE WEIGHT	AXLE & BRK. TYPE	BRK. MFG.	BRAKE SIZE	FMSI	MERITOR DISC PAD OR BRAKE SHOE	MERITOR GUIDE PIN OR RETURN SPRING KIT	MERITOR CALIPER HWD. KIT OR RETURN SPRING KIT	MERITOR ADJUSTER KIT (LEFT WHEEL)	MERITOR ADJUSTER KIT (RIGHT WHEEL)
FORD(Cont.)									
E300, E350 SERIES VAN-1 TON									
1998									
	Fd			7535 - D655	MD655	R40H5735	R40H5864	NR	NR
	Fd			7535 - D655	MD655	R40H5735	R40H5864	NR	NR
	Fd			7535 - D655	MD655	R40H5735	R40H5864	NR	NR
	Fd			7535 - D655	MD655	R40H5735	R40H5864	NR	NR
	Fd			7535 - D655	MD655	R40H5735	R40H5864	NR	NR
	Fd			7535 - D655	MD655	R40H5735	R40H5864	NR	NR
	Fd			7535 - D655	MD655	R40H5735	R40H5864	NR	NR
	Fd			7535 - D655	MD655	R40H5735	R40H5864	NR	NR
	Fd			7535 - D655	MD655	R40H5735	R40H5864	NR	NR
	Fd			7535 - D655	MD655	R40H5735	R40H5864	NR	NR
	Fd			7535 - D655	MD655	R40H5735	R40H5864	NR	NR
	Fd			7535 - D655	MD655	R40H5735	R40H5864	NR	NR
	Fd			7535 - D655	MD655	R40H5735	R40H5864	NR	NR
	Fd			7535 - D655	MD655	R40H5735	R40H5864	NR	NR
	Fd			7535 - D655	MD655	R40H5735	R40H5864	NR	NR
	Fd			7535 - D655	MD655	R40H5735	R40H5864	NR	NR
	Ra		12 " x 3 "	2140T - 314	R46358	R40H608	R40H4087	R40H2598	R40H2599
SRW	Ra	BX	12.125 x 3-1/2 "	2171T - 583	R468140	R40H608	R40H4087	R40H2598	R40H2599
Super Duty	Rd	KH		7299 - D411	MD411	NR	R40H5735	NR	NR
Super Duty, Dana 60 Axle, Single Rear Wheel	Rd	KH		7299 - D411	MD411	NR	R40H5735	NR	NR
Dana 70 7,800lb., 8,000lb.	Ra	BX	12.125 x 3-1/2 "	2171T - 583	R468140	R40H608	R40H4087	R40H2598	R40H2599
1997									
	Fd			7535 - D655	MD655	R40H5735	R40H5864	NR	NR
	Fd			7535 - D655	MD655	R40H5735	R40H5864	NR	NR
	Fd			7535 - D655	MD655	R40H5735	R40H5864	NR	NR
	Fd			7535 - D655	MD655	R40H5735	R40H5864	NR	NR
	Fd			7535 - D655	MD655	R40H5735	R40H5864	NR	NR
	Fd			7535 - D655	MD655	R40H5735	R40H5864	NR	NR
	Fd			7535 - D655	MD655	R40H5735	R40H5864	NR	NR
	Fd			7535 - D655	MD655	R40H5735	R40H5864	NR	NR
	Fd			7535 - D655	MD655	R40H5735	R40H5864	NR	NR
	Fd			7535 - D655	MD655	R40H5735	R40H5864	NR	NR
	Fd			7535 - D655	MD655	R40H5735	R40H5864	NR	NR
	Fd			7535 - D655	MD655	R40H5735	R40H5864	NR	NR
	Fd			7535 - D655	MD655	R40H5735	R40H5864	NR	NR
	Fd			7535 - D655	MD655	R40H5735	R40H5864	NR	NR
	Fd			7535 - D655	MD655	R40H5735	R40H5864	NR	NR
	Fd			7535 - D655	MD655	R40H5735	R40H5864	NR	NR
	Ra		12 " x 3 "	2140T - 314	R46358	R40H608	R40H4087	R40H2598	R40H2599
	Ra	BX	12.125 x 3-1/2 "	2171T - 583	R468140	R40H608	R40H4087	R40H2598	R40H2599
Dana 70	Ra	BX	12.125 x 3-1/2 "	2171T - 583	R468140	R40H608	R40H4087	R40H2598	R40H2599
Super Duty	Rd	KH		7299 - D411	MD411	NR	R40H5735	NR	NR
Super Duty, Dana 60 Axle, Single Rear Wheel	Rd	KH		7299 - D411	MD411	NR	R40H5735	NR	NR
1996									
	Fd			7535 - D655	MD655	R40H5735	R40H5864	NR	NR
	Fd			7535 - D655	MD655	R40H5735	R40H5864	NR	NR
	Fd			7535 - D655	MD655	R40H5735	R40H5864	NR	NR
	Fd			7535 - D655	MD655	R40H5735	R40H5864	NR	NR
	Fd			7535 - D655	MD655	R40H5735	R40H5864	NR	NR
	Fd			7535 - D655	MD655	R40H5735	R40H5864	NR	NR
	Fd			7535 - D655	MD655	R40H5735	R40H5864	NR	NR
	Fd			7535 - D655	MD655	R40H5735	R40H5864	NR	NR
	Fd			7535 - D655	MD655	R40H5735	R40H5864	NR	NR
	Fd			7535 - D655	MD655	R40H5735	R40H5864	NR	NR
	Fd			7535 - D655	MD655	R40H5735	R40H5864	NR	NR
	Fd			7535 - D655	MD655	R40H5735	R40H5864	NR	NR
	Fd			7535 - D655	MD655	R40H5735	R40H5864	NR	NR
	Fd			7535 - D655	MD655	R40H5735	R40H5864	NR	NR
	Fd			7535 - D655	MD655	R40H5735	R40H5864	NR	NR
	Fd			7535 - D655	MD655	R40H5735	R40H5864	NR	NR
	Fd			7535 - D655	MD655	R40H5735	R40H5864	NR	NR
	Fd	KH		7299 - D411	MD777	NR	R40H5735	NR	NR

85 - 4 Wheel Antilock Brakes
156 - 4x2 With Single Rear Wheels
165 - Dual Rear Wheels, Four Wheel Antilock Brakes
97 - Rear Wheel Antilock Brakes
161 - 8 Stud
166 - Dual Rear Wheels, Rear Wheel Antilock Brakes
148 - With 10 1/2" Ring Gear
162 - 9 3/4" Ring Gear, Dana 60 Axle
201 - Steel Piston

MERITOR DRUM OR ROTOR NO.	CALIPER OR CYLINDER BORE SIZE	MERITOR CALIPER OR WHEEL CYLINDER (LEFT)	MERITOR CALIPER OR WHEEL CYLINDER (RIGHT)	MERITOR CALIPER OR WHEEL CYLINDER REPAIR KIT	MERITOR CALIPER PISTON	MERITOR MASTER CYLINDER	MERITOR MASTER CYLINDER KIT	MERITOR BRAKE HOSE (LEFT)	MERITOR BRAKE HOSE (RIGHT)
									FORD(Cont.)
									E300, E350 SERIES VAN-1 TON
R44145068[166]	2-11/32 "	R42R55749	R42R55748	R4011237	R44141808	R4113284[360]	N/A	R4578333[97]	R4578332
R44145057[253]	2-11/32 "	R42R55749	R42R55748	R4011237	R44141808	R4113282[359]	N/A	R4578331[85]	R4578332
R44145057[253]	2-11/32 "	R42R55749	R42R55748	R4011237	R44141808	R4113282[361]	N/A	R4578331[85]	R4578332
R44145068[166]	2-11/32 "	R42R55749	R42R55748	R4011237	R44141808	R4113282[359]	N/A	R4578333[97]	R4578332
R44145049[156]	2-11/32 "	R42R55749	R42R55748	R4011237	R44141808	R4113282[359]	N/A	R4578333[97]	R4578332
R44145057[253]	2-11/32 "	R42R55749	R42R55748	R4011237	R44141808	R4113282[361]	N/A	R4578331[85]	R4578332
R44145049[156]	2-11/32 "	R42R55749	R42R55748	R4011237	R44141808	R4113284[362]	N/A	R4578333[97]	R4578332
R44145071[165]	2-11/32 "	R42R55749	R42R55748	R4011237	R44141808	R4113284[360]	N/A	R4578331[85]	R4578332
R44145071[165]	2-11/32 "	R42R55749	R42R55748	R4011237	R44141808	R4113284[360]	N/A	R4578331[85]	R4578332
R44145071[165]	2-11/32 "	R42R55749	R42R55748	R4011237	R44141808	R4113282[359]	N/A	R4578331[85]	R4578332
R44145057[253]	2-11/32 "	R42R55749	R42R55748	R4011237	R44141808	R4113284[362]	N/A	R4578331[85]	R4578332
R44145068[166]	2-11/32 "	R42R55749	R42R55748	R4011237	R44141808	R4113284[362]	N/A	R4578333[97]	R4578332
R44145049[156]	2-11/32 "	R42R55749	R42R55748	R4011237	R44141808	R4113284[360]	N/A	R4578333[97]	R4578332
R44145049[156]	2-11/32 "	R42R55749	R42R55748	R4011237	R44141808	R4113282[361]	N/A	R4578333[97]	R4578332
R44145068[166]	2-11/32 "	R42R55749	R42R55748	R4011237	R44141808	R4113284[360]	N/A	R4578333[97]	R4578332
R44145071[165]	2-11/32 "	R42R55749	R42R55748	R4011237	R44141808	R4113284[362]	N/A	R4578331[85]	R4578332
R44140675[161]	1-1/8 "	R4134139	R4134140[355]	N/A	NR	-	-	R4578305	R4578305
R44140620[162]	1-3/16 "	R4133945	R4133946	R418188	NR	-	-	R4578305	R4578305
-	2-23/64 "	R42R55605	R42R55604	R4066204	R4090088S	-	-	R4578305[85]	R4578305
N/A[405]	2-23/64 "	R42R55605	R42R55604	R4066204	R4090088S	-	-	R4578305[85]	R4578305
R44140545[148]	1-3/16 "	R4133945	R4133946	R418188	NR	-	-	R4578305	R4578305
R44145057[253]	2-11/32 "	R42R55749	R42R55748	R4011237	R44141808	R4113284[362]	N/A	R4578331[85]	R4578332
R44145057[253]	2-11/32 "	R42R55749	R42R55748	R4011237	R44141808	R4113282[359]	N/A	R4578331[85]	R4578332
R44145071[165]	2-11/32 "	R42R55749	R42R55748	R4011237	R44141808	R4113282[361]	N/A	R4578331[85]	R4578332
R44145057[253]	2-11/32 "	R42R55749	R42R55748	R4011237	R44141808	R4113284[360]	N/A	R4578331[85]	R4578332
R44145071[165]	2-11/32 "	R42R55749	R42R55748	R4011237	R44141808	R4113284[362]	N/A	R4578331[85]	R4578332
R44145057[253]	2-11/32 "	R42R55749	R42R55748	R4011237	R44141808	R4113282[361]	N/A	R4578331[85]	R4578332
R44145049[381]	2-11/32 "	R42R55749	R42R55748	R4011237	R44141808	R4113282[359]	N/A	R4578333[97]	R4578332
R44145071[165]	2-11/32 "	R42R55749	R42R55748	R4011237	R44141808	R4113282[359]	N/A	R4578331[85]	R4578332
R44145049[381]	2-11/32 "	R42R55749	R42R55748	R4011237	R44141808	R4113284[362]	N/A	R4578333[97]	R4578332
R44145049[381]	2-11/32 "	R42R55749	R42R55748	R4011237	R44141808	R4113284[360]	N/A	R4578333[97]	R4578332
R44145068[166]	2-11/32 "	R42R55749	R42R55748	R4011237	R44141808	R4113282[359]	N/A	R4578333[97]	R4578332
R44145068[166]	2-11/32 "	R42R55749	R42R55748	R4011237	R44141808	R4113282[361]	N/A	R4578333[97]	R4578332
R44145071[165]	2-11/32 "	R42R55749	R42R55748	R4011237	R44141808	R4113284[360]	N/A	R4578331[85]	R4578332
R44145049[381]	2-11/32 "	R42R55749	R42R55748	R4011237	R44141808	R4113282[361]	N/A	R4578333[97]	R4578332
R44145068[166]	2-11/32 "	R42R55749	R42R55748	R4011237	R44141808	R4113284[360]	N/A	R4578333[97]	R4578332
R44145068[166]	2-11/32 "	R42R55749	R42R55748	R4011237	R44141808	R4113284[362]	N/A	R4578333[97]	R4578332
R44140675[161]	1-1/8 "	R4134139	R4134140[355]	N/A	NR	-	-	R4578305	R4578305
R44140620[162]	1-3/16 "	R4133945	R4133946	R418188	NR	-	-	R4578305	R4578305
R44140545[148]	1-3/16 "	R4133945	R4133946	R418188	NR	-	-	R4578305	R4578305
-	2-23/64 "	R42R55605	R42R55604	R4066204	R4090088S	-	-	R4578305	R4578305
N/A[405]	2-23/64 "	R42R55605	R42R55604	R4066204	R4090088S	-	-	R4578305	R4578305
R44145057[253]	2-11/32 "	R42R55749	R42R55748	R4011237	R44141808	R4112842[229]	N/A	R4578331[85]	R4578332
R44145049[156]	2-11/32 "	R42R55749	R42R55748	R4011237	R44141808	R4112840[226]	N/A	R4578333[97]	R4578332
R44145071[165]	2-11/32 "	R42R55749	R42R55748	R4011237	R44141808	R4112197[225]	N/A	R4578331[85]	R4578332
R44145068[166]	2-11/32 "	R42R55749	R42R55748	R4011237	R44141808	R4112842[229]	N/A	R4578333[97]	R4578332
R44145071[165]	2-11/32 "	R42R55749	R42R55748	R4011237	R44141808	R4112840[226]	N/A	R4578331[85]	R4578332
R44145068[166]	2-11/32 "	R42R55749	R42R55748	R4011237	R44141808	R4112198[217]	N/A	R4578333[97]	R4578332
R44145049[156]	2-11/32 "	R42R55749	R42R55748	R4011237	R44141808	R4112198[217]	N/A	R4578333[97]	R4578332
R44145049[156]	2-11/32 "	R42R55749	R42R55748	R4011237	R44141808	R4112197[225]	N/A	R4578333[97]	R4578332
R44145049[156]	2-11/32 "	R42R55749	R42R55748	R4011237	R44141808	R4112842[229]	N/A	R4578333[97]	R4578332
R44145057[253]	2-11/32 "	R42R55749	R42R55748	R4011237	R44141808	R4112198[217]	N/A	R4578331[85]	R4578332
R44145068[166]	2-11/32 "	R42R55749	R42R55748	R4011237	R44141808	R4112840[226]	N/A	R4578333[97]	R4578332
R44145057[253]	2-11/32 "	R42R55749	R42R55748	R4011237	R44141808	R4112197[225]	N/A	R4578331[85]	R4578332
R44145071[165]	2-11/32 "	R42R55749	R42R55748	R4011237	R44141808	R4112198[217]	N/A	R4578331[85]	R4578332
R44145068[166]	2-11/32 "	R42R55749	R42R55748	R4011237	R44141808	R4112197[225]	N/A	R4578333[97]	R4578332
R44145057[253]	2-11/32 "	R42R55749	R42R55748	R4011237	R44141808	R4112840[226]	N/A	R4578331[85]	R4578332
R44145071[165]	2-11/32 "	R42R55749	R42R55748	R4011237	R44141808	R4112842[229]	N/A	R4578331[85]	R4578332
R44145071[165]	2-23/64 "	R42R55605	R42R55604	R4066204	R4090088S[201]	R4112843[227]	N/A	R4578331[85]	R4578332

361 - Van, Speed Control, Single Rear Wheels
405 - Rotor Only
355 - Single Rear Wheels with 12 x 3" Brakes
362 - Van, Except Speed Control
229 - Speed Control
359 - Cutaway, Stripped Chassis, Except Speed Control
381 - Rotor and Hub One Piece Assembly W/O ABS Ring
253 - Single Rear Wheels, 4 Wheel Antilock Brakes
360 - Cutaway, Stripped Chassis, Speed Control; Van, Speed Control and Dual Rear Wheels

MAKE MODEL YEAR AXLE CODE AXLE WEIGHT	AXLE & BRK. TYPE	BRK. MFG.	BRAKE SIZE	FMSI	MERITOR DISC PAD OR BRAKE SHOE	MERITOR GUIDE PIN OR RETURN SPRING KIT	MERITOR CALIPER HWD. KIT OR RETURN SPRING KIT	MERITOR ADJUSTER KIT (LEFT WHEEL)	MERITOR ADJUSTER KIT (RIGHT WHEEL)
FORD(Cont.)									
E300, E350 SERIES VAN-1 TON(Cont.)									
1996									
	Fd	KH		7299 - D411	MD777	NR	R40H5735	NR	NR
	Ra		12 " x 3 "	2140T - 314	R46358	R40H608	R40H4087	R40H2598	R40H2599
	Ra	BX	12.125 x 3-1/2 "	2171T - 583	R468140	R40H608	R40H4087	R40H2598	R40H2599
Dana 70	Ra	BX	12.125 x 3-1/2 "	2171T - 583	R468140	R40H608	R40H4087	R40H2598	R40H2599
Super Duty	Rd	KH		7299 - D411	MD411	NR	R40H5735	NR	NR
Super Duty, Dana 60 Axle, Single Rear Wheel	Rd	KH		7299 - D411	MD411	NR	R40H5735	NR	NR
1995									
	Fd			7535 - D655	MD655	R40H5735	R40H5864	NR	NR
	Fd			7535 - D655	MD655	R40H5735	R40H5864	NR	NR
	Fd			7535 - D655	MD655	R40H5735	R40H5864	NR	NR
	Fd			7535 - D655	MD655	R40H5735	R40H5864	NR	NR
	Fd			7535 - D655	MD655	R40H5735	R40H5864	NR	NR
	Fd			7535 - D655	MD655	R40H5735	R40H5864	NR	NR
	Fd			7535 - D655	MD655	R40H5735	R40H5864	NR	NR
	Fd			7535 - D655	MD655	R40H5735	R40H5864	NR	NR
	Fd			7535 - D655	MD655	R40H5735	R40H5864	NR	NR
	Fd			7535 - D655	MD655	R40H5735	R40H5864	NR	NR
	Fd			7535 - D655	MD655	R40H5735	R40H5864	NR	NR
	Fd			7535 - D655	MD655	R40H5735	R40H5864	NR	NR
	Fd			7535 - D655	MD655	R40H5735	R40H5864	NR	NR
	Fd			7535 - D655	MD655	R40H5735	R40H5864	NR	NR
	Fd			7535 - D655	MD655	R40H5735	R40H5864	NR	NR
	Ra		12 " x 3 "	2140T - 314	R46358	R40H608	R40H4087	R40H2598	R40H2599
	Ra	BX	12.125 x 3-1/2 "	2171T - 583	R468140	R40H608	R40H4087	R40H2598	R40H2599
Dana 70	Ra	BX	12.125 x 3-1/2 "	2171T - 583	R468140	R40H608	R40H4087	R40H2598	R40H2599
1994									
	Fd	FD		7436 - D557	MD557	R40H15039	R40H5815	NR	NR
	Fd	FD		7436 - D557	MD557	R40H15039	R40H5815	NR	NR
	Fd	FD		7436 - D557	MD557	R40H15039	R40H5815	NR	NR
	Fd	FD		7436 - D557	MD557	R40H15039	R40H5815	NR	NR
	Fd	FD		7436 - D557	MD557	R40H15039	R40H5815	NR	NR
	Fd	FD		7436 - D557	MD557	R40H15039	R40H5815	NR	NR
	Fd	FD		7436 - D557	MD557	R40H15039	R40H5815	NR	NR
	Fd	FD		7436 - D557	MD557	R40H15039	R40H5815	NR	NR
	Fd	FD		7436 - D557	MD557	R40H15039	R40H5815	NR	NR
	Fd	FD		7436 - D557	MD557	R40H15039	R40H5815	NR	NR
	Fd	FD		7436 - D557	MD557	R40H15039	R40H5815	NR	NR
	Fd	FD		7436 - D557	MD557	R40H15039	R40H5815	NR	NR
	Fd	FD		7436 - D557	MD557	R40H15039	R40H5815	NR	NR
	Fd	FD		7436 - D557	MD557	R40H15039	R40H5815	NR	NR
	Fd	FD		7436 - D557	MD557	R40H15039	R40H5815	NR	NR
	Fd	FD		7436 - D557	MD557	R40H15039	R40H5815	NR	NR
	Fd	FD		7436 - D557	MD557	R40H15039	R40H5815	NR	NR
Dana 60	Ra	BX	12 " x 3 "	2140AT - 358	R46358	R40H608	R40H7181	R40H2598	R40H2599
	Ra	BX	12.125 x 3-1/2 "	2171T - 583	R468140	R40H608	R40H7299	R40H2598	R40H2599
Dana 70	Ra	BX	12.125 x 3-1/2 "	2171T - 583	R468140	R40H608	R40H7299	R40H2598	R40H2599
	Ra	BX	12.125 x 3-1/2 "	2171T - 583	R468140	R40H608	R40H7299	R40H2598	R40H2599
1993									
	Fd	FD		7436 - D557	MD557	R40H15039	R40H5815	NR	NR
	Fd	FD		7436 - D557	MD557	R40H15039	R40H5815	NR	NR
	Fd	FD		7436 - D557	MD557	R40H15039	R40H5815	NR	NR
	Fd	FD		7436 - D557	MD557	R40H15039	R40H5815	NR	NR
Dana 60	Ra	BX	12 " x 3 "	2140AT - 358	R46358	R40H608	R40H7181	R40H2598	R40H2599
	Ra	BX	12.125 x 3-1/2 "	2171T - 583	R468140	R40H608	R40H7299	R40H2598	R40H2599
Dana 70	Ra	BX	12.125 x 3-1/2 "	2171T - 583	R468140	R40H608	R40H7299	R40H2598	R40H2599
	Ra	BX	12.125 x 3-1/2 "	2171T - 583	R468140	R40H608	R40H7299	R40H2598	R40H2599
1992									
	Fd	FD		7436 - D557	MD557	R40H15039	R40H5815	NR	NR
	Fd	FD		7436 - D557	MD557	R40H15039	R40H5815	NR	NR
	Ra	BX	12 " x 3 "	2140AT - 358	R46358	R40H608	R40H7181	R40H2598	R40H2599
	Ra	BX	12 " x 3 "	2140AT - 358	R46358	R40H608	R40H7181	R40H2598	R40H2599
	Ra	BX	12.125 x 3-1/2 "	2171T - 583	R468140	R40H608	R40H7299	R40H2598	R40H2599
	Ra	BX	12.125 x 3-1/2 "	2171T - 583	R468140	R40H608	R40H7299	R40H2598	R40H2599

54 - Manual Brakes
148 - With 10 1/2" Ring Gear
162 - 9 3/4" Ring Gear, Dana 60 Axle
85 - 4 Wheel Antilock Brakes
156 - 4x2 With Single Rear Wheels
165 - Dual Rear Wheels, Four Wheel Antilock Brakes
97 - Rear Wheel Antilock Brakes
161 - 8 Stud
166 - Dual Rear Wheels, Rear Wheel Antilock Brakes

MERITOR DRUM OR ROTOR NO.	CALIPER OR CYLINDER BORE SIZE	MERITOR CALIPER OR WHEEL CYLINDER (LEFT)	MERITOR CALIPER OR WHEEL CYLINDER (RIGHT)	MERITOR CALIPER OR WHEEL CYLINDER REPAIR KIT	MERITOR CALIPER PISTON	MERITOR MASTER CYLINDER	MERITOR MASTER CYLINDER KIT	MERITOR BRAKE HOSE (LEFT)	MERITOR BRAKE HOSE (RIGHT)
									FORD(Cont.)
									E300, E350 SERIES VAN-1 TON(Cont.)
R44145068[166]	2-23/64 "	R42R55605	R42R55604	R4066204	R4090088S[201]	R4112843[227]	N/A	R4578333[97]	R4578332
R44140675[161]	1-1/8 "	R4134139	R4134140[355]	N/A	NR	-	-	N/A	N/A
R44140620[162]	1-3/16 "	R4133945	R4133946	R418188	NR	-	-	N/A	N/A
R44140545[148]	1-3/16 "	R4133945	R4133946	R418188	NR	-	-	N/A	N/A
-	2-23/64 "	R42R55605	R42R55604	R4066204	R4090088S	-	-	R4578305	R4578305
N/A[405]	2-23/64 "	R42R55605	R42R55604	R4066204	R4090088S	-	-	R4578305	R4578305
R44145071[165]	2-11/32 "	R42R55749	R42R55748	R4011237	R44141808	R4112842[229]	N/A	R4578331[85]	R4578332
R44145049[156]	2-11/32 "	R42R55749	R42R55748	R4011237	R44141808	R4112198[217]	N/A	R4578333[97]	R4578332
R44145057[253]	2-11/32 "	R42R55749	R42R55748	R4011237	R44141808	R4112197[225]	N/A	R4578331[85]	R4578332
R44145049[156]	2-11/32 "	R42R55749	R42R55748	R4011237	R44141808	R4112842[229]	N/A	R4578333[97]	R4578332
R44145057[253]	2-11/32 "	R42R55749	R42R55748	R4011237	R44141808	R4112840[226]	N/A	R4578331[85]	R4578332
R44145068[166]	2-11/32 "	R42R55749	R42R55748	R4011237	R44141808	R4112840[226]	N/A	R4578333[97]	R4578332
R44145071[165]	2-11/32 "	R42R55749	R42R55748	R4011237	R44141808	R4112198[217]	N/A	R4578331[85]	R4578332
R44145068[166]	2-11/32 "	R42R55749	R42R55748	R4011237	R44141808	R4112842[229]	N/A	R4578333[97]	R4578332
R44145068[166]	2-11/32 "	R42R55749	R42R55748	R4011237	R44141808	R4112197[225]	N/A	R4578333[97]	R4578332
R44145057[253]	2-11/32 "	R42R55749	R42R55748	R4011237	R44141808	R4112198[217]	N/A	R4578331[85]	R4578332
R44145049[156]	2-11/32 "	R42R55749	R42R55748	R4011237	R44141808	R4112840[226]	N/A	R4578333[97]	R4578332
R44145049[156]	2-11/32 "	R42R55749	R42R55748	R4011237	R44141808	R4112197[225]	N/A	R4578333[97]	R4578332
R44145057[253]	2-11/32 "	R42R55749	R42R55748	R4011237	R44141808	R4112842[229]	N/A	R4578331[85]	R4578332
R44145071[165]	2-11/32 "	R42R55749	R42R55748	R4011237	R44141808	R4112840[226]	N/A	R4578331[85]	R4578332
R44145068[166]	2-11/32 "	R42R55749	R42R55748	R4011237	R44141808	R4112198[217]	N/A	R4578333[97]	R4578332
R44145071[165]	2-11/32 "	R42R55749	R42R55748	R4011237	R44141808	R4112197[225]	N/A	R4578331[85]	R4578332
R44140675[161]	1-1/8 "	R4134139	R4134140[355]	N/A	NR	-	-	N/A	N/A
R44140620[162]	1-3/16 "	R4133945	R4133946	R418188	NR	-	-	N/A	N/A
R44140545[148]	1-3/16 "	R4133945	R4133946	R418188	NR	-	-	N/A	N/A
R44141934	2-13/64 "	R42R55637	R42R55636	R4066209	R4090192P	R4112840[226]	N/A	R4578210[254]	R4578209
R44141917	2-13/64 "	R42R55637	R42R55636	R4066209	R4090192P	R4112200[211]	N/A	R4578208[253]	R4578209
R44141917	2-13/64 "	R42R55637	R42R55636	R4066209	R4090192P	R4112200[211]	N/A	R4578208[253]	R4578209
R44141934	2-13/64 "	R42R55637	R42R55636	R4066209	R4090192P	R4112840[226]	N/A	R4578210[254]	R4578209
R44141127[181]	2-13/64 "	R42R55637	R42R55636	R4066209	R4090192P	R4112842[229]	N/A	R4578210[254]	R4578209
R44141127[181]	2-13/64 "	R42R55637	R42R55636	R4066209	R4090192P	R4112842[229]	N/A	R4578210[254]	R4578209
R44141934	2-13/64 "	R42R55637	R42R55636	R4066209	R4090192P	R4112840[226]	N/A	R4578210[254]	R4578209
R44141127[181]	2-13/64 "	R42R55637	R42R55636	R4066209	R4090192P	R4112842[229]	N/A	R4578210[254]	R4578209
R44141934	2-13/64 "	R42R55637	R42R55636	R4066209	R4090192P	R4112840[226]	N/A	R4578210[254]	R4578209
R44141127[181]	2-13/64 "	R42R55637	R42R55636	R4066209	R4090192P	R4112198[217]	N/A	R4578208[253]	R4578209
R44141917	2-13/64 "	R42R55637	R42R55636	R4066209	R4090192P	R4112200[211]	N/A	R4578208[253]	R4578209
R44141917	2-13/64 "	R42R55637	R42R55636	R4066209	R4090192P	R4112200[211]	N/A	R4578208[253]	R4578209
R44141127[181]	2-13/64 "	R42R55637	R42R55636	R4066209	R4090192P	R4112198[217]	N/A	R4578208[253]	R4578209
R44141127[181]	2-13/64 "	R42R55637	R42R55636	R4066209	R4090192P	R4112198[217]	N/A	R4578208[253]	R4578209
R44141127[181]	2-13/64 "	R42R55637	R42R55636	R4066209	R4090192P	R4112842[229]	N/A	R4578210[254]	R4578209
R44141127[181]	2-13/64 "	R42R55637	R42R55636	R4066209	R4090192P	R4112198[217]	N/A	R4578208[253]	R4578209
R44140620[162]	1-1/16 "	R4133595	R4133596	R4166821	NR	-	-	R4578305	R4578305
R44140620[162]	1-1/16 "	R4133595	R4133596	R4166821	NR	-	-	R4578305	R4578305
R44140545[148]	1-1/8 "	R4133206	R4133207	R418187	NR	-	-	R4578305	R4578305
R44140545[148]	1-3/16 "	R4133945	R4133946	R418188	NR	-	-	R4578305	R4578305
R44141127[181]	2-13/64 "	R42R55637	R42R55636	R4066209	R4090192P	R4112197[225]	N/A	R4578188[254]	R4578187
R44141127[181]	2-13/64 "	R42R55637	R42R55636	R4066209	R4090192P	R4112197[225]	N/A	R4578188[254]	R4578187
R44141798	2-13/64 "	R42R55637	R42R55636	R4066209	R4090192P	R4112833[235]	N/A	R4578188[254]	R4578187
R44141798	2-13/64 "	R42R55637	R42R55636	R4066209	R4090192P	R4112833[235]	N/A	R4578188[254]	R4578187
R44140620[162]	1-1/16 "	R4133595	R4133596	R4166821	NR	-	-	R4578305	R4578305
R44140620[162]	1-1/16 "	R4133595	R4133596	R4166821	NR	-	-	R4578305	R4578305
R44140545[148]	1-1/8 "	R4133206	R4133207	R418187	NR	-	-	R4578305	R4578305
R44140545[148]	1-3/16 "	R4133945	R4133946	R418188	NR	-	-	R4578305	R4578305
R44141127[181]	2-13/64 "	R42R55637	R42R55636	R4066209	R4090192P	R4112641[54]	N/A	R4578188	R4578187
R44141798	2-13/64 "	R42R55637	R42R55636	R4066209	R4090192P	R4112641[54]	N/A	R4578188	R4578187
N/A	1-3/16 "	R4133945	R4133946	R418188	NR	-	-	R4578305	R4578305
R44140493	1 "	R4133725	R4133726	R4166822	NR	-	-	R4578305	R4578305
R44140545[148]	1-1/8 "	R4133206	R4133207	R4166935	NR	-	-	R4578305	R4578305
R44140545[148]	1-1/8 "	R4133206	R4133207	R4166935	NR	-	-	R4578305	R4578305

253 - Single Rear Wheels, 4 Wheel Antilock Brakes
405 - Rotor Only
227 - Cutaway, Stripped Chassis with Hydraulic Booster
254 - Single Rear Wheels, Rear Wheel Antilock Brakes
225 - Cutaway, Stripped Chassis Except Speed Control
229 - Speed Control
355 - Single Rear Wheels with 12 x 3" Brakes
226 - Cutaway, Stripped Chassis With Speed Control
235 - 4x4, Power Brakes

MAKE MODEL YEAR AXLE CODE AXLE WEIGHT	AXLE & BRK. TYPE	BRK. MFG.	BRAKE SIZE	FMSI	MERITOR DISC PAD OR BRAKE SHOE	MERITOR GUIDE PIN OR RETURN SPRING KIT	MERITOR CALIPER HWD. KIT OR RETURN SPRING KIT	MERITOR ADJUSTER KIT (LEFT WHEEL)	MERITOR ADJUSTER KIT (RIGHT WHEEL)
FORD(Cont.)									
E300, E350 SERIES VAN-1 TON(Cont.)									
1992									
	Ra	BX	12.125 x 3-1/2 "	2171T - 583	R468140	R40H608	R40H7299	R40H2598	R40H2599
	Ra	BX	12.125 x 3-1/2 "	2171T - 583	R468140	R40H608	R40H7299	R40H2598	R40H2599
1991									
	Fd	DN		7054 - D120	MD120	R407130	60050135	NR	NR
	Fd	DN		7054 - D120	MD120	R407130	60050135	NR	NR
	Fd	DN		7330 - D450	MD450	R407130	60050135	NR	NR
	Fd	DN		7330 - D450	MD450	R407130	60050135	NR	NR
	Fd	DN		7330 - D450	MD450	R407130	60050135	NR	NR
	Fd	DN		7330 - D450	MD450	R407130	60050135	NR	NR
	Fd	DN		7054 - D120	MD120	R407130	60050135	NR	NR
	Fd	DN		7054 - D120	MD120	R407130	60050135	NR	NR
	Ra	BX	12 " x 3 "	2140AT - 358	R46358	R40H608	R40H7181	R40H2598	R40H2599
	Ra	BX	12 " x 3 "	2140AT - 358	R46358	R40H608	R40H7181	R40H2598	R40H2599
	Ra	BX	12.125 x 3-1/2 "	2171T - 583	R468140	R40H608	R40H7299	R40H2598	R40H2599
	Ra	BX	12.125 x 3-1/2 "	2171T - 583	R468140	R40H608	R40H7299	R40H2598	R40H2599
	Ra	BX	12.125 x 3-1/2 "	2171T - 583	R468140	R40H608	R40H7299	R40H2598	R40H2599
	Ra	BX	12.125 x 3-1/2 "	2171T - 583	R468140	R40H608	R40H7299	R40H2598	R40H2599
1990									
	Fd	DN		7054 - D120	MD120	R407130	60050135	NR	NR
	Fd	DN		7054 - D120	MD120	R407130	60050135	NR	NR
	Fd	DN		7054 - D120	MD120	R407130	60050135	NR	NR
	Fd	DN		7054 - D120	MD120	R407130	60050135	NR	NR
	Ra	BX	12 " x 3 "	2140AT - 358	R46358	R40H608	R40H7181	R40H2598	R40H2599
	Ra	BX	12 " x 3 "	2140AT - 358	R46358	R40H608	R40H7181	R40H2598	R40H2599
	Ra	BX	12.125 x 3-1/2 "	2171T - 583	R468140	R40H608	R40H7299	R40H2598	R40H2599
	Ra	BX	12.125 x 3-1/2 "	2171T - 583	R468140	R40H608	R40H7299	R40H2598	R40H2599
	Ra	BX	12.125 x 3-1/2 "	2171T - 583	R468140	R40H608	R40H7299	R40H2598	R40H2599
	Ra	BX	12.125 x 3-1/2 "	2171T - 583	R468140	R40H608	R40H7299	R40H2598	R40H2599
1989									
	Fd	DN		7054 - D120	MD120	R407130	60050135	NR	NR
	Fd	DN		7054 - D120	MD120	R407130	60050135	NR	NR
	Fd	DN		7054 - D120	MD120	R407130	60050135	NR	NR
	Fd	DN		7054 - D120	MD120	R407130	60050135	NR	NR
	Ra	BX	12 " x 3 "	2140AT - 358	R46358	R40H608	R40H7181	R40H2598	R40H2599
	Ra	BX	12 " x 3 "	2140AT - 358	R46358	R40H608	R40H7181	R40H2598	R40H2599
	Ra	BX	12.125 x 3-1/2 "	2171T - 583	R468140	R40H608	R40H7299	R40H2598	R40H2599
	Ra	BX	12.125 x 3-1/2 "	2171T - 583	R468140	R40H608	R40H7299	R40H2598	R40H2599
	Ra	BX	12.125 x 3-1/2 "	2171T - 583	R468140	R40H608	R40H7299	R40H2598	R40H2599
	Ra	BX	12.125 x 3-1/2 "	2171T - 583	R468140	R40H608	R40H7299	R40H2598	R40H2599
1988									
	Fd	DN		7054 - D120	MD120	R407130	60050135	NR	NR
	Fd	DN		7054 - D120	MD120	R407130	60050135	NR	NR
	Fd	DN		7054 - D120	MD120	R407130	60050135	NR	NR
	Fd	DN		7054 - D120	MD120	R407130	60050135	NR	NR
	Ra	BX	12 " x 3 "	2140AT - 358	R46358	R40H608	R40H7181	R40H2598	R40H2599
	Ra	BX	12 " x 3 "	2140AT - 358	R46358	R40H608	R40H7181	R40H2598	R40H2599
	Ra	BX	12.125 x 3-1/2 "	2171T - 583	R468140	R40H608	R40H7299	R40H2598	R40H2599
	Ra	BX	12.125 x 3-1/2 "	2171T - 583	R468140	R40H608	R40H7299	R40H2598	R40H2599
	Ra	BX	12.125 x 3-1/2 "	2171T - 583	R468140	R40H608	R40H7299	R40H2598	R40H2599
	Ra	BX	12.125 x 3-1/2 "	2171T - 583	R468140	R40H608	R40H7299	R40H2598	R40H2599
1987									
	Fd	DN		7054 - D120	MD120	R407130	60050135	NR	NR
	Fd	DN		7054 - D120	MD120	R407130	60050135	NR	NR
	Fd	DN		7054 - D120	MD120	R407130	60050135	NR	NR
	Fd	DN		7054 - D120	MD120	R407130	60050135	NR	NR
	Ra	BX	12 " x 3 "	2140AT - 358	R46358	R40H608	R40H7181	R40H2598	R40H2599
	Ra	BX	12 " x 3 "	2140AT - 358	R46358	R40H608	R40H7181	R40H2598	R40H2599
	Ra	BX	12.125 x 3-1/2 "	2171T - 583	R468140	R40H608	R40H7299	R40H2598	R40H2599
	Ra	BX	12.125 x 3-1/2 "	2171T - 583	R468140	R40H608	R40H7299	R40H2598	R40H2599
	Ra	BX	12.125 x 3-1/2 "	2171T - 583	R468140	R40H608	R40H7299	R40H2598	R40H2599
	Ra	BX	12.125 x 3-1/2 "	2171T - 583	R468140	R40H608	R40H7299	R40H2598	R40H2599
1986									
	Fd	DN		7054 - D120	MD120	R407130	60050135	NR	NR
	Fd	DN		7054 - D120	MD120	R407130	60050135	NR	NR

41 - Aluminum piston
189 - Single Rear Wheels, 10 1/4" Ring Gear
256 - Dual Rear Wheels after 3/91
148 - With 10 1/2" Ring Gear
211 - Manual Brakes, Stripped Chassis Except Speed Control
290 - Use E-11222 for High Temperature Boots
181 - Rotor Only, Machine Rotor After Re-hub
225 - Cutaway, Stripped Chassis Except Speed Control
381 - Rotor and Hub One Piece Assembly W/O ABS Ring

MERITOR DRUM OR ROTOR NO.	CALIPER OR CYLINDER BORE SIZE	MERITOR CALIPER OR WHEEL CYLINDER (LEFT)	MERITOR CALIPER OR WHEEL CYLINDER (RIGHT)	MERITOR CALIPER OR WHEEL CYLINDER REPAIR KIT	MERITOR CALIPER PISTON	MERITOR MASTER CYLINDER	MERITOR MASTER CYLINDER KIT	MERITOR BRAKE HOSE (LEFT)	MERITOR BRAKE HOSE (RIGHT)
									FORD(Cont.)
									E300, E350 SERIES VAN-1 TON(Cont.)
R44140545[148]	1-1/16 "	R4133595	R4133596	R4166821	NR	-	-	R4578305	R4578305
R44140545[148]	1-1/16 "	R4133595	R4133596	R4166821	NR	-	-	R4578305	R4578305
R44141487[381]	2-3/16 "	R42R55456	R42R55456	R4166713	R4090029[41]	R4112197[225]	N/A	R4577312[256]	R4577309
R44141487[381]	2-3/16 "	R42R55456	R42R55456	R4166713	R4090029[41]	R4112200[211]	N/A	R4577312[256]	R4577309
R44141127[181]	2-3/16 "	R42R55461P	R42R55460P	R4166713	R4090180P[290]	R4112200[211]	N/A	R4577312[256]	R4577309
R44141487[381]	2-3/16 "	R42R55461P	R42R55460P	R4166713	R4090180P[290]	R4112200[211]	N/A	R4577312[256]	R4577309
R44141487[381]	2-3/16 "	R42R55461P	R42R55460P	R4166713	R4090180P[290]	R4112197[225]	N/A	R4577312[256]	R4577309
R44141127[181]	2-3/16 "	R42R55461P	R42R55460P	R4166713	R4090180P[290]	R4112197[225]	N/A	R4577312[256]	R4577309
R44141127[181]	2-3/16 "	R42R55456	R42R55456	R4166713	R4090029[41]	R4112197[225]	N/A	R4577312[256]	R4577309
R44141127[181]	2-3/16 "	R42R55456	R42R55456	R4166713	R4090029[41]	R4112200[211]	N/A	R4577312[256]	R4577309
R44140504[189]	1-3/16 "	R4133945	R4133946	R418188	NR	-	-	R4578610[256]	R4578610
R44140504[189]	1 "	R4133725	R4133726	R4166822	NR	-	-	R4578610[256]	R4578610
R44140545[148]	1-1/8 "	R4133206	R4133207	R4166935	NR	-	-	R4578610[256]	R4578610
R44140545[148]	1-1/16 "	R4133595	R4133596	R4166821	NR	-	-	R4578610[256]	R4578610
R44140545[148]	1-1/16 "	R4133595	R4133596	R4166821	NR	-	-	R4578610[256]	R4578610
R44140545[148]	1-1/8 "	R4133206	R4133207	R4166935	NR	-	-	R4578610[256]	R4578610
R44141487[381]	2-3/16 "	R42R55456	R42R55456	R4166713	R4090029[41]	R4112200[211]	N/A	R4577312	R4577309
R44141127[181]	2-3/16 "	R42R55456	R42R55456	R4166713	R4090029[41]	R4112197[225]	N/A	R4577312	R4577309
R44141487[381]	2-3/16 "	R42R55456	R42R55456	R4166713	R4090029[41]	R4112197[225]	N/A	R4577312	R4577309
R44141127[181]	2-3/16 "	R42R55456	R42R55456	R4166713	R4090029[41]	R4112200[211]	N/A	R4577312	R4577309
R44140504[189]	1-3/16 "	R4133945	R4133946	R418188	NR	-	-	R4578610	R4578610
R44140504[189]	1 "	R4133725	R4133726	R4166822	NR	-	-	R4578610	R4578610
R44140545[148]	1-1/16 "	R4133595	R4133596	R4166821	NR	-	-	R4578610	R4578610
R44140545[148]	1-1/8 "	R4133206	R4133207	R4166935	NR	-	-	R4578610	R4578610
R44140545[148]	1-1/8 "	R4133206	R4133207	R4166935	NR	-	-	R4578610	R4578610
R44140545[148]	1-1/16 "	R4133595	R4133596	R4166821	NR	-	-	R4578610	R4578610
R44141127[181]	2-3/16 "	R42R55456	R42R55456	R4166713	R4090029[41]	R4112197[225]	N/A	R4577312	R4577309
R44141487[381]	2-3/16 "	R42R55456	R42R55456	R4166713	R4090029[41]	R4112200[211]	N/A	R4577312	R4577309
R44141487[381]	2-3/16 "	R42R55456	R42R55456	R4166713	R4090029[41]	R4112197[225]	N/A	R4577312	R4577309
R44141127[181]	2-3/16 "	R42R55456	R42R55456	R4166713	R4090029[41]	R4112200[211]	N/A	R4577312	R4577309
R44140504[189]	1-3/16 "	R4133945	R4133946	R418188	NR	-	-	R4578610	R4578610
R44140504[189]	1 "	R4133725	R4133726	R4166822	NR	-	-	R4578610	R4578610
R44140545[148]	1-1/8 "	R4133206	R4133207	R4166935	NR	-	-	R4578610	R4578610
R44140545[148]	1-1/8 "	R4133206	R4133207	R4166935	NR	-	-	R4578610	R4578610
R44140545[148]	1-1/16 "	R4133595	R4133596	R4166821	NR	-	-	R4578610	R4578610
R44140545[148]	1-1/16 "	R4133595	R4133596	R4166821	NR	-	-	R4578610	R4578610
R44141127[181]	2-3/16 "	R42R55456	R42R55456	R4166713	R4090029[41]	R4112200[211]	N/A	R4577312	R4577309
R44141487[381]	2-3/16 "	R42R55456	R42R55456	R4166713	R4090029[41]	R4112200[211]	N/A	R4577312	R4577309
R44141487[381]	2-3/16 "	R42R55456	R42R55456	R4166713	R4090029[41]	R4112197[225]	N/A	R4577312	R4577309
R44141127[181]	2-3/16 "	R42R55456	R42R55456	R4166713	R4090029[41]	R4112197[225]	N/A	R4577312	R4577309
R44140504[189]	1 "	R4133725	R4133726	R4166822	NR	-	-	R4578610	R4578610
R44140504[189]	1-3/16 "	R4133945	R4133946	R418188	NR	-	-	R4578610	R4578610
R44140545[148]	1-1/8 "	R4133206	R4133207	R4166935	NR	-	-	R4578610	R4578610
R44140545[148]	1-1/16 "	R4133595	R4133596	R4166821	NR	-	-	R4578610	R4578610
R44140545[148]	1-1/8 "	R4133206	R4133207	R4166935	NR	-	-	R4578610	R4578610
R44140545[148]	1-1/16 "	R4133595	R4133596	R4166821	NR	-	-	R4578610	R4578610
R44141487[381]	2-3/16 "	R42R55456	R42R55456	R4166713	R4090029[41]	R4112197[225]	N/A	R4577312	R4577309
R44141127[181]	2-3/16 "	R42R55456	R42R55456	R4166713	R4090029[41]	R4112197[225]	N/A	R4577312	R4577309
R44141127[181]	2-3/16 "	R42R55456	R42R55456	R4166713	R4090029[41]	R4112200[211]	N/A	R4577312	R4577309
R44141487[381]	2-3/16 "	R42R55456	R42R55456	R4166713	R4090029[41]	R4112200[211]	N/A	R4577312	R4577309
R44140504[189]	1-3/16 "	R4133945	R4133946	R418188	NR	-	-	R4578610	R4578610
R44140504[189]	1 "	R4133725	R4133726	R4166822	NR	-	-	R4578610	R4578610
R44140545[148]	1-1/16 "	R4133595	R4133596	R4166821	NR	-	-	R4578610	R4578610
R44140545[148]	1-1/8 "	R4133206	R4133207	R4166935	NR	-	-	R4578610	R4578610
R44140545[148]	1-1/8 "	R4133206	R4133207	R4166935	NR	-	-	R4578610	R4578610
R44140545[148]	1-1/16 "	R4133595	R4133596	R4166821	NR	-	-	R4578610	R4578610
R44141127[181]	2-3/16 "	R42R55456	R42R55456	R4166713	R4090029[41]	R4112200[211]	N/A	R4577312	R4577309
R44141127[181]	2-3/16 "	R42R55456	R42R55456	R4166713	R4090029[41]	R4112197[225]	N/A	R4577312	R4577309

MAKE MODEL YEAR AXLE CODE AXLE WEIGHT	AXLE & BRK. TYPE	BRK. MFG.	BRAKE SIZE	FMSI	MERITOR DISC PAD OR BRAKE SHOE	MERITOR GUIDE PIN OR RETURN SPRING KIT	MERITOR CALIPER HWD. KIT OR RETURN SPRING KIT	MERITOR ADJUSTER KIT (LEFT WHEEL)	MERITOR ADJUSTER KIT (RIGHT WHEEL)
FORD(Cont.)									
E300, E350 SERIES VAN-1 TON(Cont.)									
1986									
	Fd	DN		7054 - D120	MD120	R407130	60050135	NR	NR
	Fd	DN		7054 - D120	MD120	R407130	60050135	NR	NR
	Ra	BX	12 " x 3 "	2140AT - 358	R46358	R40H608	R40H7181	R40H2598	R40H2599
	Ra	BX	12 " x 3 "	2140AT - 358	R46358	R40H608	R40H7181	R40H2598	R40H2599
	Ra	BX	12.125 x 3-1/2 "	2171T - 583	R468140	R40H608	R40H7299	R40H2598	R40H2599
	Ra	BX	12.125 x 3-1/2 "	2171T - 583	R468140	R40H608	R40H7299	R40H2598	R40H2599
	Ra	BX	12.125 x 3-1/2 "	2171T - 583	R468140	R40H608	R40H7299	R40H2598	R40H2599
	Ra	BX	12.125 x 3-1/2 "	2171T - 583	R468140	R40H608	R40H7299	R40H2598	R40H2599
1985									
	Fd	DN		7054 - D120	MD120	R40H05025	60050135	NR	NR
	Fd	DN		7054 - D120	MD120	R40H05025	60050135	NR	NR
	Ra	BX	12 " x 3 "	2140AT - 358	R46358	R40H608	R40H7181	R40H2598	R40H2599
	Ra	BX	12 " x 3 "	2140AT - 358	R46358	R40H608	R40H7181	R40H2598	R40H2599
	Ra	BX	12 " x 3 "	2140AT - 358	R46358	R40H608	R40H7181	R40H2598	R40H2599
	Ra	BX	12 " x 3 "	2140AT - 358	R46358	R40H608	R40H7181	R40H2598	R40H2599
	Ra	BX	12 " x 3 "	2140AT - 358	R46358	R40H608	R40H7181	R40H2598	R40H2599
	Ra	BX	12 " x 3 "	2140AT - 358	R46358	R40H608	R40H7181	R40H2598	R40H2599
1984									
	Fd	DN		7054 - D120	MD120	R40H05025	60050135	NR	NR
	Fd	DN		7054 - D120	MD120	R40H05025	60050135	NR	NR
	Ra	BX	12 " x 3 "	2140AT - 358	R46358	R40H608	R40H7181	R40H2598	R40H2599
	Ra	BX	12 " x 3 "	2140AT - 358	R46358	R40H608	R40H7181	R40H2598	R40H2599
	Ra	BX	12 " x 3 "	2140AT - 358	R46358	R40H608	R40H7181	R40H2598	R40H2599
1983									
	Fd	DN		7054 - D120	MD120	R40H05025	60050135	NR	NR
	Fd	DN		7054 - D120	MD120	R40H05025	60050135	NR	NR
	Ra	BX	12 " x 3 "	2140AT - 358	R46358	R40H608	R40H7181	R40H2598	R40H2599
	Ra	BX	12 " x 3 "	2140AT - 358	R46358	R40H608	R40H7181	R40H2598	R40H2599
	Ra	BX	12 " x 3 "	2140AT - 358	R46358	R40H608	R40H7181	R40H2598	R40H2599
1982									
	Fd	DN		7054 - D120	MD120	R40H05025	60050135	NR	NR
	Fd	DN		7054 - D120	MD120	R40H05025	60050135	NR	NR
	Fd	DN		7054 - D120	MD120	R40H05025	60050135	NR	NR
	Ra	BX	12 " x 3 "	2140AT - 358	R46358	R40H608	R40H7181	R40H2598	R40H2599
	Ra	BX	12 " x 3 "	2140AT - 358	R46358	R40H608	R40H7181	R40H2598	R40H2599
	Ra	BX	12 " x 3 "	2140AT - 358	R46358	R40H608	R40H7181	R40H2598	R40H2599
	Ra	BX	12 " x 3 "	2140AT - 358	R46358	R40H608	R40H7181	R40H2598	R40H2599
1981									
	Fd	DN		7054 - D120	MD120	R40H05025	60050135	NR	NR
	Fd	DN		7054 - D120	MD120	R40H05025	60050135	NR	NR
	Ra	BX	12 " x 3 "	2140AT - 358	R46358	R40H608	R40H7181	R40H2598	R40H2599
1980									
	Fd	DN		7054 - D120	MD120	R40H05025	60050135	NR	NR
	Ra	BX	12 " x 3 "	2140AT - 358	R46358	R40H608	R40H7181	R40H2598	R40H2599
1979									
	Fd	DN		7054 - D120	MD120	R40H05025	60050135	NR	NR
	Ra	BX	12 " x 3 "	2140AT - 358	R46358	R40H608	R40H7181	R40H2598	R40H2599
1978									
	Fd	DN		7054 - D120	MD120	R40H05025	60050135	NR	NR
	Ra	BX	12 " x 3 "	2140AT - 358	R46358	R40H608	R40H7181	R40H2598	R40H2599
1977									
	Fd	DN		7054 - D120	MD120	R40H05025	60050135	NR	NR
	Ra	BX	12 " x 3 "	2140AT - 358	R46358	R40H608	R40H7181	R40H2598	R40H2599
1976									
	Fd	DN		7054 - D120	MD120	R40H05025	60050135	NR	NR
	Ra	BX	12 " x 3 "	2140AT - 358	R46358	R40H546	R40H7146	R40H2598	R40H2599
1975									
	Fd	DN		7054 - D120	MD120	R40H05025	60050135	NR	NR
	Ra	BX	12 " x 3 "	2140AT - 358	R46358	R40H546	R40H7146	R40H2598	R40H2599
E350 SERIES VAN-1 TON									
2005									
DRW	Fd	TRW		7535 - D655	MD655	NR	R4012262	NR	NR
	Fd	TRW		7535 - D655	MD655	NR	R4012262	NR	NR

41 - Aluminum piston
166 - Dual Rear Wheels, Rear Wheel Antilock Brakes
189 - Single Rear Wheels, 10 1/4" Ring Gear
54 - Manual Brakes
167 - Except 10 1/4" Ring Gear
211 - Manual Brakes, Stripped Chassis Except Speed Control
148 - With 10 1/2" Ring Gear
181 - Rotor Only, Machine Rotor After Re-hub
225 - Cutaway, Stripped Chassis Except Speed Control

MERITOR DRUM OR ROTOR NO.	CALIPER OR CYLINDER BORE SIZE	MERITOR CALIPER OR WHEEL CYLINDER (LEFT)	MERITOR CALIPER OR WHEEL CYLINDER (RIGHT)	MERITOR CALIPER OR WHEEL CYLINDER REPAIR KIT	MERITOR CALIPER PISTON	MERITOR MASTER CYLINDER	MERITOR MASTER CYLINDER KIT	MERITOR BRAKE HOSE (LEFT)	MERITOR BRAKE HOSE (RIGHT)
FORD(Cont.)									
E300, E350 SERIES VAN-1 TON(Cont.)									
R44141487[381]	2-3/16 "	R42R55456	R42R55456	R4166713	R4090029[41]	R4112197[225]	N/A	R4577312	R4577309
R44141487[381]	2-3/16 "	R42R55456	R42R55456	R4166713	R4090029[41]	R4112200[211]	N/A	R4577312	R4577309
R44140504[189]	1 "	R4133725	R4133726	R4166822	NR	-	-	R4578610	R4578610
R44140504[189]	1-3/16 "	R4133945	R4133946	R418188	NR	-	-	R4578610	R4578610
R44140545[148]	1-1/8 "	R4133206	R4133207	R4166935	NR	-	-	R4578610	R4578610
R44140545[148]	1-1/16 "	R4133595	R4133596	R4166821	NR	-	-	R4578610	R4578610
R44140545[148]	1-1/16 "	R4133595	R4133596	R4166821	NR	-	-	R4578610	R4578610
R44140545[148]	1-1/8 "	R4133206	R4133207	R4166935	NR	-	-	R4578610	R4578610
R44141234[381]	2-3/16 "	R42R55412	R42R55411	R4166713	R4090029[41]	R4112008[54]	N/A	R4577312[256]	R4577309
R44141127[181]	2-3/16 "	R42R55412	R42R55411	R4166713	R4090029[41]	R4112008[54]	N/A	R4577312[256]	R4577309
R44140278[345]	1-1/8 "	R4133206	R4133207	R418187	NR	-	-	R4577614	R4577614
R44140504[189]	1 "	R4133725	R4133726	R4166822	NR	-	-	R4577189	R4577189
R44140278[345]	1-1/8 "	R4133206	R4133207	R418187	NR	-	-	R4577189	R4577189
R44140344[167]	1 "	R4133725	R4133726	R4166822	NR	-	-	R4577189	R4577189
R44140504[189]	1 "	R4133725	R4133726	R4166822	NR	-	-	R4577614	R4577614
R44140344[167]	1 "	R4133725	R4133726	R4166822	NR	-	-	R4577614	R4577614
R44141127[181]	2-3/16 "	R42R55412	R42R55411	R4166713	R4090029[41]	R4112008[54]	N/A	R4577312[256]	R4577309
R44141234[381]	2-3/16 "	R42R55412	R42R55411	R4166713	R4090029[41]	R4112008[54]	N/A	R4577312[256]	R4577309
R44140278[345]	1-1/8 "	R4133206	R4133207	R418187	NR	-	-	R4577189	R4577189
R44140504[189]	1 "	R4133725	R4133726	R4166822	NR	-	-	R4577189	R4577189
R44140344[167]	1 "	R4133725	R4133726	R4166822	NR	-	-	R4577189	R4577189
R44141234[189]	2-3/16 "	R42R55412	R42R55411	R4166713	R4090029[41]	R4111682[54]	N/A	R4577312[256]	R4577309
R44141127[181]	2-3/16 "	R42R55412	R42R55411	R4166713	R4090029[41]	R4111682[54]	N/A	R4577312[256]	R4577309
R44140278[345]	1-1/8 "	R4133206	R4133207	R418187	NR	-	-	R4577189	R4577189
R44140504[189]	1 "	R4133725	R4133726	R4166822	NR	-	-	R4577189	R4577189
R44140344[167]	1 "	R4133725	R4133726	R4166822	NR	-	-	R4577189	R4577189
R44141234[189]	2-3/16 "	R42R55412	R42R55411	R4166713	R4090029[41]	R4111682[54]	N/A	R4577312[256]	R4577309
R44141127[181]	2-3/16 "	R42R55412	R42R55411	R4166713	R4090029[41]	R4111682[54]	N/A	R4577312[256]	R4577309
N/A	2-3/16 "	R42R55412	R42R55411	R4166713	R4090029[41]	R4111682[54]	N/A	R4577312[256]	R4577309
R44140278[345]	1-1/8 "	R4133206	R4133207	R418187	NR	-	-	R4577189	R4577189
R44140504[189]	1 "	R4133725	R4133726	R4166822	NR	-	-	R4577189	R4577189
N/A[189]	1-1/16 "	R4133791	R 418145	R4166821	NR	-	-	R4577189	R4577189
R44140344[167]	1 "	R4133725	R4133726	R4166822	NR	-	-	R4577189	R4577189
N/A	2-3/16 "	R42R55412	R42R55411	R4166713	R4090029[41]	R4111682[54]	N/A	R4577312[256]	R4577309
N/A	2-3/16 "	R42R55412	R42R55411	R4166713	R4090029[41]	R4111682[54]	N/A	R4577312[256]	R4577309
N/A	1-1/16 "	R4133791	R 418145	R4166821	NR	-	-	R4577189	R4577189
N/A	2-3/16 "	R42R55412	R42R55411	R4166713	R4090029[41]	R4111682[54]	N/A	R4577312[256]	R4577309
N/A	1-1/16 "	R4133791	R 418145	R4166821	NR	-	-	R4577189	R4577189
N/A	2-3/16 "	R42R55413	R42R55413	R4166713	R4090029[41]	R4111682[54]	N/A	R4577312[256]	R4577309
N/A	1-1/16 "	R4133791	R 418145	R4166821	NR	-	-	-	-
N/A	2-3/16 "	R42R55413	R42R55413	R4166713	R4090029[41]	R4111682[54]	N/A	R4577312[256]	R4577309
N/A	1-1/16 "	R4133791	R 418145	R4166821	NR	-	-	-	-
-	2-3/16 "	R42R55413	R42R55413	R4166713	R4090029[41]	R4111682[54]	N/A	-	-
-	1-1/16 "	R4133791	R 418145	R4166821	NR	-	-	-	-
-	2-3/16 "	R42R55413	R42R55413	R4166713	R4090029[41]	-	-	-	-
-	1-1/16 "	R4133791	R 418145	R4166821	NR	-	-	-	-
-	2-3/16 "	R42R55456	R42R55456	R4166713	R4090029[41]	-	-	-	-
-	1-1/16 "	R4133791	R 418145	R4166821	NR	-	-	-	-
E350 SERIES VAN-1 TON									
R4066530[166]	56mm	R4255749	R4255748	R4012261	R4012260[363]	-	N/A	-	-
R4066530[166]	56mm	R4255749	R4255748	R4012261	R4012260[363]	R4113497[228]	N/A	-	-

228 - Except Speed Control
256 - Dual Rear Wheels after 3/91
345 - Dual Rear Wheels, except 10.25" ring gear
363 - Piston includes Boots and Seals
381 - Rotor and Hub One Piece Assembly W/O ABS Ring

MAKE MODEL YEAR AXLE CODE AXLE WEIGHT	AXLE & BRK. TYPE	BRK. MFG.	BRAKE SIZE	FMSI	MERITOR DISC PAD OR BRAKE SHOE	MERITOR GUIDE PIN OR RETURN SPRING KIT	MERITOR CALIPER HWD. KIT OR RETURN SPRING KIT	MERITOR ADJUSTER KIT (LEFT WHEEL)	MERITOR ADJUSTER KIT (RIGHT WHEEL)
FORD(Cont.)									
E350 SERIES VAN-1 TON(Cont.)									
2005									
	Fd	TRW		7535 - D655	MD655	NR	R4012262	NR	NR
	Fd	TRW		7535 - D655	MD655	NR	R4012262	NR	NR
	Rd	TRW		7673 - D802	MVD802	NR	R4012041	NR	NR
SRW	Fd	TRW		7535 - D655	MD655	NR	R4012262	NR	NR
	Fd	TRW		7535 - D655	MD655	NR	R4012262	NR	NR
	Fd	TRW		7535 - D655	MD655	NR	R4012262	NR	NR
	Fd	TRW		7535 - D655	MD655	NR	R4012262	NR	NR
	Rd	TRW		7673 - D802	MVD802	NR	R4012041	NR	NR
2004									
DRW	Fd	TRW		7535 - D655	MD655	NR	R4012262	NR	NR
	Fd	TRW		7535 - D655	MD655	NR	R4012262	NR	NR
	Fd	TRW		7535 - D655	MD655	NR	R4012262	NR	NR
	Fd	TRW		7535 - D655	MD655	NR	R4012262	NR	NR
	Rd	TRW		7673 - D802	MVD802	NR	R4012041	NR	NR
SRW	Fd	TRW		7535 - D655	MD655	NR	R4012262	NR	NR
	Fd	TRW		7535 - D655	MD655	NR	R4012262	NR	NR
	Fd	TRW		7535 - D655	MD655	NR	R4012262	NR	NR
	Fd	TRW		7535 - D655	MD655	NR	R4012262	NR	NR
	Ra		12 " x 3 "	2140T - 314	R46358	R40H608	R40H4087	R40H2598	R40H2599
	Rd	TRW		7673 - D802	MVD802	NR	R4012041	NR	NR
SRW or DRW 7,800 lb., 8,000 lb Rear Axle Capacity	Ra		12 " x 3 "	2140T - 314	R46358	R40H608	R40H4087	R40H2598	R40H2599
2003									
DRW	Fd	TRW		7535 - D655	MD655	NR	R4012262	NR	NR
	Fd	TRW		7535 - D655	MD655	NR	R4012262	NR	NR
	Fd	TRW		7535 - D655	MD655	NR	R4012262	NR	NR
	Fd	TRW		7535 - D655	MD655	NR	R4012262	NR	NR
	Rd	TRW		7673 - D802	MVD802	NR	R4012041	NR	NR
SRW	Fd	TRW		7535 - D655	MD655	NR	R4012262	NR	NR
	Fd	TRW		7535 - D655	MD655	NR	R4012262	NR	NR
	Fd	TRW		7535 - D655	MD655	NR	R4012262	NR	NR
	Fd	TRW		7535 - D655	MD655	NR	R4012262	NR	NR
	Ra		12 " x 3 "	2140T - 314	R46358	R40H608	R40H4087	R40H2598	R40H2599
	Rd	TRW		7673 - D802	MVD802	NR	R4012041	NR	NR
SRW or DRW 7,800 lb., 8,000 lb Rear Axle Capacity	Ra		12 " x 3 "	2140T - 314	R46358	R40H608	R40H4087	R40H2598	R40H2599
2002									
DRW	Fd	TRW		7535 - D655	MD655	NR	R4012262	NR	NR
	Fd	TRW		7535 - D655	MD655	NR	R4012262	NR	NR
	Fd	TRW		7535 - D655	MD655	NR	R4012262	NR	NR
	Fd	TRW		7535 - D655	MD655	NR	R4012262	NR	NR
	Ra		12 " x 3 "	2140T - 314	R46358	R40H608	R40H4087	R40H2598	R40H2599
	Rd	TRW		7673 - D802	MVD802	NR	R4012041	NR	NR
SRW	Fd	TRW		7535 - D655	MD655	NR	R4012262	NR	NR
	Fd	TRW		7535 - D655	MD655	NR	R4012262	NR	NR
	Fd	TRW		7535 - D655	MD655	NR	R4012262	NR	NR
	Fd	TRW		7535 - D655	MD655	NR	R4012262	NR	NR
	Ra		12 " x 3 "	2140T - 314	R46358	R40H608	R40H4087	R40H2598	R40H2599
	Rd	TRW		7673 - D802	MVD802	NR	R4012041	NR	NR
SRW or DRW 7,800 lb., 8,000 lb Rear Axle Capacity	Ra		12 " x 3 "	2140T - 314	R46358	R40H608	R40H4087	R40H2598	R40H2599
Super Duty w/ DRW	Fd	TRW		7535 - D655	MD655	NR	R4012262	NR	NR
	Fd	TRW		7535 - D655	MD655	NR	R4012262	NR	NR
Super Duty w/ SRW	Fd	TRW		7535 - D655	MD655	NR	R4012262	NR	NR
	Fd	TRW		7535 - D655	MD655	NR	R4012262	NR	NR
2001									
DRW	Fd	TRW		7535 - D655	MD655	NR	R4012262	NR	NR
	Fd	TRW		7535 - D655	MD655	NR	R4012262	NR	NR
	Fd	TRW		7535 - D655	MD655	NR	R4012262	NR	NR
	Fd	TRW		7535 - D655	MD655	NR	R4012262	NR	NR

85 - 4 Wheel Antilock Brakes
161 - 8 Stud
166 - Dual Rear Wheels, Rear Wheel Antilock Brakes
97 - Rear Wheel Antilock Brakes
162 - 9 3/4" Ring Gear, Dana 60 Axle
228 - Except Speed Control
148 - With 10 1/2" Ring Gear
165 - Dual Rear Wheels, Four Wheel Antilock Brakes
229 - Speed Control

MERITOR DRUM OR ROTOR NO.	CALIPER OR CYLINDER BORE SIZE	MERITOR CALIPER OR WHEEL CYLINDER (LEFT)	MERITOR CALIPER OR WHEEL CYLINDER (RIGHT)	MERITOR CALIPER OR WHEEL CYLINDER REPAIR KIT	MERITOR CALIPER PISTON	MERITOR MASTER CYLINDER	MERITOR MASTER CYLINDER KIT	MERITOR BRAKE HOSE (LEFT)	MERITOR BRAKE HOSE (RIGHT)
									FORD(Cont.)
									E350 SERIES VAN-1 TON(Cont.)
R44145071[165]	56mm	R4255749	R4255748	R4012261	R4012260[363]	-	N/A	-	-
R44145071[165]	56mm	R4255749	R4255748	R4012261	R4012260[363]	R4113497[228]	N/A	-	-
R44145268[405]	45mm	R4255858	R4255857	R4012040	R4012039[363]	-	-	-	-
R44145049[97]	56mm	R4255749	R4255748	R4012261	R4012260[363]	-	N/A	-	-
R44145057[253]	56mm	R4255749	R4255748	R4012261	R4012260[363]	-	N/A	-	-
R44145049[97]	56mm	R4255749	R4255748	R4012261	R4012260[363]	R4113497[228]	N/A	-	-
R44145057[253]	56mm	R4255749	R4255748	R4012261	R4012260[363]	R4113497[228]	N/A	-	-
R44145251[405]	45mm	R4255858	R4255857	R4012040	R4012039[363]	-	-	-	-
R44145071[165]	56mm	R4255749	R4255748	R4012261	R4012260[363]	R4113497[228]	N/A	R4578332[85]	R4578331
R4066530[166]	56mm	R4255749	R4255748	R4012261	R4012260[363]	R4113497[228]	N/A	R4578333[97]	R4578331
R4066530[166]	56mm	R4255749	R4255748	R4012261	R4012260[363]	-	N/A	R4578333[97]	R4578331
R44145071[165]	56mm	R4255749	R4255748	R4012261	R4012260[363]	-	N/A	R4578332[85]	R4578331
R44145268[405]	45mm	R4255858	R4255857	R4012040	R4012039[363]	-	-	-	R4112468
R44145057[253]	56mm	R4255749	R4255748	R4012261	R4012260[363]	-	N/A	R4578332[85]	R4578331
R44145049[97]	56mm	R4255749	R4255748	R4012261	R4012260[363]	-	N/A	R4578333[97]	R4578331
R44145057[253]	56mm	R4255749	R4255748	R4012261	R4012260[363]	R4113497[228]	N/A	R4578332[85]	R4578331
R44145049[97]	56mm	R4255749	R4255748	R4012261	R4012260[363]	R4113497[228]	N/A	R4578333[97]	R4578331
R44140675[161]	1-3/16 "	R4133945	R4133946	R418188	NR	-	-	-	R4112468
R44145251[405]	45mm	R4255858	R4255857	R4012040	R4012039[363]	-	-	-	R4112468
R44140545[148]	1-3/16 "	R4133945	R4133946	R418188	NR	-	-	-	R4112468
R44145071[165]	56mm	R4255749	R4255748	R4012261	R4012260[363]	R4113497[228]	N/A	R4578332[85]	R4578331
R44145071[165]	56mm	R4255749	R4255748	R4012261	R4012260[363]	R4113498[229]	N/A	R4578332[85]	R4578331
R4066530[166]	56mm	R4255749	R4255748	R4012261	R4012260[363]	R4113498[229]	N/A	R4578333[97]	R4578331
R4066530[166]	56mm	R4255749	R4255748	R4012261	R4012260[363]	R4113497[228]	N/A	R4578333[97]	R4578331
R44145268[405]	45mm	R4255858	R4255857	R4012040	R4012039[363]	-	-	-	R4112468
R44145049[97]	56mm	R4255749	R4255748	R4012261	R4012260[363]	R4113498[229]	N/A	R4578333[97]	R4578331
R44145057[253]	56mm	R4255749	R4255748	R4012261	R4012260[363]	R4113498[229]	N/A	R4578332[85]	R4578331
R44145049[97]	56mm	R4255749	R4255748	R4012261	R4012260[363]	R4113497[228]	N/A	R4578333[97]	R4578331
R44145057[253]	56mm	R4255749	R4255748	R4012261	R4012260[363]	R4113497[228]	N/A	R4578332[85]	R4578331
R44140675[161]	1-3/16 "	R4133945	R4133946	R418188	NR	-	-	-	R4112468
R44145251[405]	45mm	R4255858	R4255857	R4012040	R4012039[363]	-	-	-	R4112468
R44140545[148]	1-3/16 "	R4133945	R4133946	R418188	NR	-	-	-	R4112468
R44145071[165]	56mm	R4255749	R4255748	R4012261	R4012260[363]	R4113497[228]	N/A	R4578332[85]	R4578331
R4066530[166]	56mm	R4255749	R4255748	R4012261	R4012260[363]	R4113498[229]	N/A	R4578333[97]	R4578331
R44145071[165]	56mm	R4255749	R4255748	R4012261	R4012260[363]	R4113498[229]	N/A	R4578332[85]	R4578331
R4066530[166]	56mm	R4255749	R4255748	R4012261	R4012260[363]	R4113497[228]	N/A	R4578333[97]	R4578331
R44140620[162]	1-3/16 "	R4133945	R4133946	R418188	NR	-	-	-	R4112468
R44145268[405]	45mm	R4255858	R4255857	R4012040	R4012039[363]	-	-	-	R4112468
R44145057[253]	56mm	R4255749	R4255748	R4012261	R4012260[363]	R4113497[228]	N/A	R4578332[85]	R4578331
R44145049[97]	56mm	R4255749	R4255748	R4012261	R4012260[363]	R4113497[228]	N/A	R4578333[97]	R4578331
R44145057[253]	56mm	R4255749	R4255748	R4012261	R4012260[363]	R4113498[229]	N/A	R4578332[85]	R4578331
R44145049[97]	56mm	R4255749	R4255748	R4012261	R4012260[363]	R4113498[229]	N/A	R4578333[97]	R4578331
R44140675[161]	1-3/16 "	R4133945	R4133946	R418188	NR	-	-	-	R4112468
R44145251[405]	45mm	R4255858	R4255857	R4012040	R4012039[363]	-	-	-	R4112468
R44140545[148]	1-3/16 "	R4133945	R4133946	R418188	NR	-	-	-	R4112468
R4066530[166]	56mm	R4255749	R4255748	R4012261	R4012260[363]	R4112468[229]	N/A	R4578333[97]	R4578331
R44145071[165]	56mm	R4255749	R4255748	R4012261	R4012260[363]	R4112468[229]	N/A	R4578332[85]	R4578331
R44145057[253]	56mm	R4255749	R4255748	R4012261	R4012260[363]	R4112468[229]	N/A	R4578332[85]	R4578331
R44145049[97]	56mm	R4255749	R4255748	R4012261	R4012260[363]	R4112468[229]	N/A	R4578333[97]	R4578331
R44145071[165]	56mm	R4255749	R4255748	R4012261	R4012260[363]	R4113497[228]	N/A	R4578332[85]	R4578331
R4066530[166]	56mm	R4255749	R4255748	R4012261	R4012260[363]	R4113497[228]	N/A	R4578333[97]	R4578331
R44145071[165]	56mm	R4255749	R4255748	R4012261	R4012260[363]	R4113498[229]	N/A	R4578332[85]	R4578331
R4066530[166]	56mm	R4255749	R4255748	R4012261	R4012260[363]	R4113498[229]	N/A	R4578333[97]	R4578331

253 - Single Rear Wheels, 4 Wheel Antilock Brakes

363 - Piston includes Boots and Seals

405 - Rotor Only

MAKE MODEL YEAR AXLE CODE AXLE WEIGHT	AXLE & BRK. TYPE	BRK. MFG.	BRAKE SIZE	FMSI	MERITOR DISC PAD OR BRAKE SHOE	MERITOR GUIDE PIN OR RETURN SPRING KIT	MERITOR CALIPER HWD. KIT OR RETURN SPRING KIT	MERITOR ADJUSTER KIT (LEFT WHEEL)	MERITOR ADJUSTER KIT (RIGHT WHEEL)
FORD(Cont.)									
E350 SERIES VAN-1 TON(Cont.)									
2001									
DRW	Ra		12 " x 3 "	2140T - 314	R46358	R40H608	R40H4087	R40H2598	R40H2599
	Rd	TRW		7673 - D802	MVD802	NR	R4012041	NR	NR
SRW	Fd	TRW		7535 - D655	MD655	NR	R4012262	NR	NR
	Fd	TRW		7535 - D655	MD655	NR	R4012262	NR	NR
	Fd	TRW		7535 - D655	MD655	NR	R4012262	NR	NR
	Fd	TRW		7535 - D655	MD655	NR	R4012262	NR	NR
	Rd	TRW		7673 - D802	MVD802	NR	R4012041	NR	NR
Super Duty w/ DRW	Fd	TRW		7535 - D655	MD655	NR	R4012262	NR	NR
	Fd	TRW		7535 - D655	MD655	NR	R4012262	NR	NR
Super Duty w/ SRW	Fd	TRW		7535 - D655	MD655	NR	R4012262	NR	NR
	Fd	TRW		7535 - D655	MD655	NR	R4012262	NR	NR
2000									
DRW	Fd	TRW		7535 - D655	MD655	NR	R4012262	NR	NR
	Fd	TRW		7535 - D655	MD655	NR	R4012262	NR	NR
	Fd	TRW		7535 - D655	MD655	NR	R4012262	NR	NR
	Fd	TRW		7535 - D655	MD655	NR	R4012262	NR	NR
	Rd	TRW		7673 - D802	MVD802	NR	R4012041	NR	NR
SRW	Fd	TRW		7535 - D655	MD655	NR	R4012262	NR	NR
	Fd	TRW		7535 - D655	MD655	NR	R4012262	NR	NR
	Fd	TRW		7535 - D655	MD655	NR	R4012262	NR	NR
	Fd	TRW		7535 - D655	MD655	NR	R4012262	NR	NR
	Ra		12 " x 3 "	2140T - 314	R46358	R40H608	R40H4087	R40H2598	R40H2599
	Ra		12 " x 3 "	2140T - 314	R46358	R40H608	R40H4087	R40H2598	R40H2599
	Rd	TRW		7673 - D802	MVD802	NR	R4012041	NR	NR
Super Duty w/ DRW	Fd	TRW		7535 - D655	MD655	NR	R4012262	NR	NR
	Fd	TRW		7535 - D655	MD655	NR	R4012262	NR	NR
Super Duty w/ SRW	Fd	TRW		7535 - D655	MD655	NR	R4012262	NR	NR
	Fd	TRW		7535 - D655	MD655	NR	R4012262	NR	NR
1999									
DRW	Fd	TRW		7535 - D655	MD655	NR	R4012262	NR	NR
	Fd	TRW		7535 - D655	MD655	NR	R4012262	NR	NR
	Fd	TRW		7535 - D655	MD655	NR	R4012262	NR	NR
	Fd	TRW		7535 - D655	MD655	NR	R4012262	NR	NR
	Rd	TRW		7673 - D802	MVD802	NR	R4012041	NR	NR
SRW	Fd	TRW		7535 - D655	MD655	NR	R4012262	NR	NR
	Fd	TRW		7535 - D655	MD655	NR	R4012262	NR	NR
	Fd	TRW		7535 - D655	MD655	NR	R4012262	NR	NR
	Fd	TRW		7535 - D655	MD655	NR	R4012262	NR	NR
	Ra		12 " x 3 "	2140T - 314	R46358	R40H608	R40H4087	R40H2598	R40H2599
	Ra		12 " x 3 "	2140T - 314	R46358	R40H608	R40H4087	R40H2598	R40H2599
	Rd	TRW		7673 - D802	MVD802	NR	R4012041	NR	NR
Super Duty w/ DRW	Fd	TRW		7535 - D655	MD655	NR	R4012262	NR	NR
	Fd	TRW		7535 - D655	MD655	NR	R4012262	NR	NR
Super Duty w/ SRW	Fd	TRW		7535 - D655	MD655	NR	R4012262	NR	NR
	Fd	TRW		7535 - D655	MD655	NR	R4012262	NR	NR
E450 SERIES VAN									
2006									
DRW	Fd	TRW		7299 - D411	MD411	NR	R4012262	NR	NR
	Fd	TRW		7299 - D411	MD411	NR	R4012262	NR	NR
	Rd	TRW		7299 - D411	MD411	NR	R40H5735	NR	NR
SRW	Fd	TRW		7299 - D411	MD411	NR	R4012262	NR	NR
	Fd	TRW		7299 - D411	MD411	NR	R4012262	NR	NR
2005									
DRW	Fd	TRW		7299 - D411	MD411	NR	R4012262	NR	NR
	Fd	TRW		7299 - D411	MD411	NR	R4012262	NR	NR
	Rd	TRW		7299 - D411	MD411	NR	R40H5735	NR	NR
SRW	Fd	TRW		7299 - D411	MD411	NR	R4012262	NR	NR
	Fd	TRW		7299 - D411	MD411	NR	R4012262	NR	NR
2004									
DRW	Fd	TRW		7299 - D411	MD411	NR	R4012262	NR	NR
	Fd	TRW		7299 - D411	MD411	NR	R4012262	NR	NR
	Rd	TRW		7299 - D411	MD411	NR	R40H5735	NR	NR
SRW	Fd	TRW		7299 - D411	MD411	NR	R4012262	NR	NR

85 - 4 Wheel Antilock Brakes
162 - 9 3/4" Ring Gear, Dana 60 Axle
228 - Except Speed Control

97 - Rear Wheel Antilock Brakes
165 - Dual Rear Wheels, Four Wheel Antilock Brakes
229 - Speed Control

161 - 8 Stud
166 - Dual Rear Wheels, Rear Wheel Antilock Brakes
235 - 4x4, Power Brakes

MERITOR DRUM OR ROTOR NO.	CALIPER OR CYLINDER BORE SIZE	MERITOR CALIPER OR WHEEL CYLINDER (LEFT)	MERITOR CALIPER OR WHEEL CYLINDER (RIGHT)	MERITOR CALIPER OR WHEEL CYLINDER REPAIR KIT	MERITOR CALIPER PISTON	MERITOR MASTER CYLINDER	MERITOR MASTER CYLINDER KIT	MERITOR BRAKE HOSE (LEFT)	MERITOR BRAKE HOSE (RIGHT)
									FORD(Cont.)
									E350 SERIES VAN-1 TON(Cont.)
R44140675[161]	1-3/16 "	R4133945	R4133946	R418188	NR	-	-	-	R4112468
R44145268[405]	45mm	R4255858	R4255857	R4012040	R4012039[363]	-	-	-	R4112468
R44145057[235]	56mm	R4255749	R4255748	R4012261	R4012260[363]	R4113497[228]	N/A	R4578332[85]	R4578331
R44145049[97]	56mm	R4255749	R4255748	R4012261	R4012260[363]	R4113497[228]	N/A	R4578333[97]	R4578331
R44145049[97]	56mm	R4255749	R4255748	R4012261	R4012260[363]	R4113498[229]	N/A	R4578333[97]	R4578331
R44145057[253]	56mm	R4255749	R4255748	R4012261	R4012260[363]	R4113498[229]	N/A	R4578332[85]	R4578331
R44145251[405]	45mm	R4255858	R4255857	R4012040	R4012039[363]	-	-	-	R4112468
R4066530[166]	56mm	R4255749	R4255748	R4012261	R4012260[363]	R4112468[229]	N/A	R4578333[97]	R4578331
R44145071[165]	56mm	R4255749	R4255748	R4012261	R4012260[363]	R4112468[229]	N/A	R4578332[85]	R4578331
R44145057[253]	56mm	R4255749	R4255748	R4012261	R4012260[363]	R4112468[229]	N/A	R4578332[85]	R4578331
R44145049[97]	56mm	R4255749	R4255748	R4012261	R4012260[363]	R4112468[229]	N/A	R4578333[97]	R4578331
R44145071[165]	56mm	R4255749	R4255748	R4012261	R4012260[363]	R4113498[229]	N/A	R4578332[85]	R4578331
R4066530[166]	56mm	R4255749	R4255748	R4012261	R4012260[363]	R4113498[229]	N/A	R4578333[97]	R4578331
R4066530[166]	56mm	R4255749	R4255748	R4012261	R4012260[363]	R4113497[228]	N/A	R4578333[97]	R4578331
R44145071[165]	56mm	R4255749	R4255748	R4012261	R4012260[363]	R4113497[228]	N/A	R4578332[85]	R4578331
R44145268[405]	45mm	R4255858	R4255857	R4012040	R4012039[363]	-	-	R4578305	-
R44145057[253]	56mm	R4255749	R4255748	R4012261	R4012260[363]	R4113498[229]	N/A	R4578332[85]	R4578331
R44145049[97]	56mm	R4255749	R4255748	R4012261	R4012260[363]	R4113497[228]	N/A	R4578333[97]	R4578331
R44145049[97]	56mm	R4255749	R4255748	R4012261	R4012260[363]	R4113498[229]	N/A	R4578333[97]	R4578331
R44145057[253]	56mm	R4255749	R4255748	R4012261	R4012260[363]	R4113497[228]	N/A	R4578332[85]	R4578331
R44140620[162]	1-1/8 "	R4134139	R4134139	R418188	NR	-	-	R4578305	R4112468
R44140675[161]	1-3/16 "	R4133945	R4133946	R418188	NR	-	-	R4578305	-
R44145251[405]	45mm	R4255858	R4255857	R4012040	R4012039[363]	-	-	R4578305	-
R44145071[165]	56mm	R4255749	R4255748	R4012261	R4012260[363]	R4112468[229]	N/A	R4578332[85]	R4578331
R4066530[166]	56mm	R4255749	R4255748	R4012261	R4012260[363]	R4112468[229]	N/A	R4578333[97]	R4578331
R44145049[97]	56mm	R4255749	R4255748	R4012261	R4012260[363]	R4112468[229]	N/A	R4578333[97]	R4578331
R44145057[253]	56mm	R4255749	R4255748	R4012261	R4012260[363]	R4112468[229]	N/A	R4578332[85]	R4578331
R4066530[166]	56mm	R4255749	R4255748	R4012261	R4012260[363]	R4113498[229]	N/A	R4578333[97]	R4578331
R44145071[165]	56mm	R4255749	R4255748	R4012261	R4012260[363]	R4113498[229]	N/A	R4578332[85]	R4578331
R44145071[165]	56mm	R4255749	R4255748	R4012261	R4012260[363]	R4113497[228]	N/A	R4578332[85]	R4578331
R4066530[166]	56mm	R4255749	R4255748	R4012261	R4012260[363]	R4113497[228]	N/A	R4578333[97]	R4578331
R44145268[405]	45mm	R4255858	R4255857	R4012040	R4012039[363]	-	-	R4578305	-
R44145049[97]	56mm	R4255749	R4255748	R4012261	R4012260[363]	R4113498[229]	N/A	R4578333[97]	R4578331
R44145049[97]	56mm	R4255749	R4255748	R4012261	R4012260[363]	R4113497[228]	N/A	R4578333[97]	R4578331
R44145057[85]	56mm	R4255749	R4255748	R4012261	R4012260[363]	R4113498[229]	N/A	R4578332[85]	R4578331
R44145057[253]	56mm	R4255749	R4255748	R4012261	R4012260[363]	R4113497[228]	N/A	R4578332[85]	R4578331
R44140620[162]	1-1/8 "	R4134139	R4134139	R418188	NR	-	-	R4578305	R4112468
R44140675[161]	1-3/16 "	R4133945	R4133946	R418188	NR	-	-	R4578305	-
R44145251[405]	45mm	R4255858	R4255857	R4012040	R4012039[363]	-	-	R4578305	-
R44145071[165]	56mm	R4255749	R4255748	R4012261	R4012260[363]	R4112468[229]	N/A	R4578332[85]	R4578331
R4066530[166]	56mm	R4255749	R4255748	R4012261	R4012260[363]	R4112468[229]	N/A	R4578333[97]	R4578331
R44145049[97]	56mm	R4255749	R4255748	R4012261	R4012260[363]	R4112468[229]	N/A	R4578333[97]	R4578331
R44145057[253]	56mm	R4255749	R4255748	R4012261	R4012260[363]	R4112468[229]	N/A	R4578332[85]	R4578331
									E450 SERIES VAN
R4066530[166]	56mm	R4255749	R4255748	R4012261	R4012260[363]	R4113497[228]	N/A	R4578333[97]	R4578331
R44145071[165]	56mm	R4255749	R4255748	R4012261	R4012260[363]	R4113497[228]	N/A	R4578332[85]	R4578331
R44145162[405]	2-11/32 "	R42R55605	R42R55604	R4066204	R4090088S	-	-	-	-
R44145057[253]	56mm	R4255749	R4255748	R4012261	R4012260[363]	R4113497[228]	N/A	R4578332[85]	R4578331
R44145049[97]	56mm	R4255749	R4255748	R4012261	R4012260[363]	R4113497[228]	N/A	R4578333[97]	R4578331
R44145071[165]	56mm	R4255749	R4255748	R4012261	R4012260[363]	R4113497[228]	N/A	R4578332[85]	R4578331
R4066530[166]	56mm	R4255749	R4255748	R4012261	R4012260[363]	R4113497[228]	N/A	R4578333[97]	R4578331
R44145162[405]	2-11/32 "	R42R55605	R42R55604	R4066204	R4090088S	-	-	-	-
R44145049[97]	56mm	R4255749	R4255748	R4012261	R4012260[363]	R4113497[228]	N/A	R4578333[97]	R4578331
R44145057[253]	56mm	R4255749	R4255748	R4012261	R4012260[363]	R4113497[228]	N/A	R4578332[85]	R4578331
R4066530[166]	56mm	R4255749	R4255748	R4012261	R4012260[363]	R4113497[228]	N/A	R4578333[97]	R4578331
R44145071[165]	56mm	R4255749	R4255748	R4012261	R4012260[363]	R4113497[228]	N/A	R4578332[85]	R4578331
R44145162[405]	2-11/32 "	R42R55605	R42R55604	R4066204	R4090088S	-	-	-	-
R44145057[253]	56mm	R4255749	R4255748	R4012261	R4012260[363]	R4113497[228]	N/A	R4578332[85]	R4578331

253 - Single Rear Wheels, 4 Wheel Antilock Brakes

363 - Piston includes Boots and Seals

405 - Rotor Only

MAKE MODEL YEAR AXLE CODE AXLE WEIGHT	AXLE & BRK. TYPE	BRK. MFG.	BRAKE SIZE	FMSI	MERITOR DISC PAD OR BRAKE SHOE	MERITOR GUIDE PIN OR RETURN SPRING KIT	MERITOR CALIPER HWD. KIT OR RETURN SPRING KIT	MERITOR ADJUSTER KIT (LEFT WHEEL)	MERITOR ADJUSTER KIT (RIGHT WHEEL)
FORD(Cont.)									
E450 SERIES VAN(Cont.)									
2004									
	Fd	TRW		7299 - D411	MD411	NR	R4012262	NR	NR
SRW or DRW 9.75 Ring Gear 6,340 lb	Rd	TRW		7299 - D411	MD411	NR	R40H5735	NR	NR
SRW or DRW 10.5 Ring Gear 8,000 lb	Rd	TRW		7299 - D411	MD411	NR	R40H5735	NR	NR
2003									
DRW	Fd	TRW		7299 - D411	MD411	NR	R4012262	NR	NR
	Fd	TRW		7299 - D411	MD411	NR	R4012262	NR	NR
SRW	Fd	TRW		7299 - D411	MD411	NR	R4012262	NR	NR
	Fd	TRW		7299 - D411	MD411	NR	R4012262	NR	NR
SRW or DRW 9.75 Ring Gear 6,340 lb	Rd	TRW		7299 - D411	MD411	NR	R40H5735	NR	NR
SRW or DRW 10.5 Ring Gear 8,000 lb	Rd	TRW		7299 - D411	MD411	NR	R40H5735	NR	NR
2002									
DRW	Fd	TRW		7299 - D411	MD411	NR	R4012262	NR	NR
	Fd	TRW		7299 - D411	MD411	NR	R4012262	NR	NR
SRW	Fd	TRW		7299 - D411	MD411	NR	R4012262	NR	NR
	Fd	TRW		7299 - D411	MD411	NR	R4012262	NR	NR
SRW or DRW 9.75 Ring Gear 6,340 lb	Rd	TRW		7299 - D411	MD411	NR	R40H5735	NR	NR
SRW or DRW 10.5 Ring Gear 8,000 lb	Rd	TRW		7299 - D411	MD411	NR	R40H5735	NR	NR
F200, F250 SERIES PICKUP-3/4 TON									
1998									
	Rd			7584 - D711	MD711	R40H15068	R4011191	NR	NR
2 x 4 Except 7.3 Diesel Over 8500 lb. GVW	Fd	TRW		7535 - D655	MD655	NR	NR	NR	NR
2 x 4, SRW, 4 wheel ABS Under 8500 lb GVW with rear disc brakes	Fd	TRW		7752 - D702	MD702	NR	NR	NR	NR
2 x 4, SRW, Rear wheel ABS Under 8500 lb GVW	Fd	TRW		7752 - D702	MD702	NR	NR	NR	NR
4 x 4	Fd	TRW		7752 - D702	MD702	NR	NR	NR	NR
4 x 4 Over 8500 lb. GVW	Fd	TRW		7535 - D655	MD655	NR	NR	NR	NR
4 x 4 under 8500 lb. GVW	Fd	TRW		7752 - D702	MD702	NR	NR	NR	NR
DRW Over 8500 lb. GVW	Ra		12 " x 3 "	2140T - 314	R46358	R40H608	R40H4087	R40H2598	R40H2599
Over 8500 lb. GVW	Ra		12 " x 3 "	2140T - 314	R46358	R40H608	R40H4087	R40H2598	R40H2599
Rear Disc Brake	Rd	TRW		D711	MD711	-	-	-	-
under 8500 lb. GVW	Ra		12 " x 2-1/2 "	2146AT - 316	R46357	R40H546	R40H4087	R40H2598	R40H2599
4x4 Below 8,500 lb. GVW	Fd			7576 - D702	MD702	R4011234	N/A	NR	NR
1997									
	Ra		12 " x 3 "	2140T - 314	R46358	R40H608	R40H4087	R40H2598	R40H2599
	Ra		12 " x 3 "	2140T - 314	R46358	R40H608	R40H4087	R40H2598	R40H2599
	Ra	BX	12 " x 2-1/2 "	2146AT - 316	R46357	R40H546	R40H4087	R40H2598	R40H2599[147]
	Rd			7584 - D711	MD711	R40H15068	R4011191	NR	NR
2 x 4 Except 7.3 Diesel Over 8500 lb. GVW	Fd	TRW		7535 - D655	MD655	NR	NR	NR	NR
2 x 4, SRW, 4 wheel ABS Under 8500 lb GVW with rear disc brakes	Fd	TRW		7752 - D702	MD702	NR	NR	NR	NR
2 x 4, SRW, Rear wheel ABS Under 8500 lb GVW	Fd	TRW		7752 - D702	MD702	NR	NR	NR	NR

85 - 4 Wheel Antilock Brakes
165 - Dual Rear Wheels, Four Wheel Antilock Brakes
213 - Manual Brakes, Speed Control
97 - Rear Wheel Antilock Brakes
166 - Dual Rear Wheels, Rear Wheel Antilock Brakes
228 - Except Speed Control
147 - Requires two per wheel
189 - Single Rear Wheels, 10 1/4" Ring Gear
229 - Speed Control

MERITOR DRUM OR ROTOR NO.	CALIPER OR CYLINDER BORE SIZE	MERITOR CALIPER OR WHEEL CYLINDER (LEFT)	MERITOR CALIPER OR WHEEL CYLINDER (RIGHT)	MERITOR CALIPER OR WHEEL CYLINDER REPAIR KIT	MERITOR CALIPER PISTON	MERITOR MASTER CYLINDER	MERITOR MASTER CYLINDER KIT	MERITOR BRAKE HOSE (LEFT)	MERITOR BRAKE HOSE (RIGHT)
FORD(Cont.)									
E450 SERIES VAN(Cont.)									
R44145049[97]	56mm	R4255749	R4255748	R4012261	R4012260[363]	R4113497[228]	N/A	R4578333[97]	R4578331
R44145251[405]	2-11/32 "	R42R55605	R42R55604	R4066204	R4090088S	-	-	-	-
R44145268[405]	2-11/32 "	R42R55605	R42R55604	R4066204	R4090088S	-	-	-	-
R44145071[165]	56mm	R4255749	R4255748	R4012261	R4012260[363]	R4113497[228]	N/A	R4578332[85]	R4578331
R4066530[166]	56mm	R4255749	R4255748	R4012261	R4012260[363]	R4113497[228]	N/A	R4578333[97]	R4578331
R44145049[97]	56mm	R4255749	R4255748	R4012261	R4012260[363]	R4113497[228]	N/A	R4578333[97]	R4578331
R44145057[253]	56mm	R4255749	R4255748	R4012261	R4012260[363]	R4113497[228]	N/A	R4578332[85]	R4578331
R44145251[405]	2-11/32 "	R42R55605	R42R55604	R4066204	R4090088S	-	-	-	-
R44145268[405]	2-11/32 "	R42R55605	R42R55604	R4066204	R4090088S	-	-	-	-
R44145071[165]	56mm	R4255749	R4255748	R4012261	R4012260[363]	R4113497[228]	N/A	R4578332[85]	R4578331
R4066530[166]	56mm	R4255749	R4255748	R4012261	R4012260[363]	R4113497[228]	N/A	R4578333[97]	R4578331
R44145057[253]	56mm	R4255749	R4255748	R4012261	R4012260[363]	R4113497[228]	N/A	R4578332[85]	R4578331
R44145049[97]	56mm	R4255749	R4255748	R4012261	R4012260[363]	R4113497[228]	N/A	R4578333[97]	R4578331
R44145251[405]	2-11/32 "	R42R55605	R42R55604	R4066204	R4090088S	-	-	-	-
R44145268[405]	2-11/32 "	R42R55605	R42R55604	R4066204	R4090088S	-	-	-	-
F200, F250 SERIES PICKUP-3/4 TON									
R44145139[405]		-	-	N/A	NR	-	-	-	-
R44145049[381]	56mm	R4255749	R4255748	R4012261	R4012260[363]	R4113355[228]	-	R4578325	R4578324
R42145143	51mm	R4255795	R4255794	R4012266	R4012265[363]	R4113355[228]	-	R4578514	R4578513
R42145144	51mm	R4255795	R4255794	R4012266	R4012265[363]	R4113263[229]	-	R4578514	R4578513
R44145279	51mm	R4255795	R4255794	R4012266	R4012265[363]	R4110382[228]	-	R4578516	R4578515
R44145055[405]	56mm	R4255749	R4255748	R4012261	R4012260[363]	R4110382[228]	-	R4578327	R4578326
R44145055[405]	51mm	R4255795	R4255794	R4012266	R4012265[363]	R4110382[228]	-	R4578516	R4578515
R44140504[189]		R4134139	R4134140	R418188	NR	-	-	R4578701[378]	R4512486
R44140504[189]	1-3/16 "	R4133945	R4133946	R418188	NR	-	-	R4578700[376]	R4512486
R44145139[405]		-	-	-	-	-	-	-	-
R44140712[393]	1 "	R4133004	R4133004	R4166822	NR	-	-	R4578184	R4578183
R44145145[405]		N/A	N/A	R4011139	R4011145	R4110382[213]	N/A	R4578514	R4578513
N/A	1-1/8 "	R4133614	R4133615	R4166935	NR	-	-	-	-
N/A	1-3/16 "	R4133945	R4133946	R418188	NR	-	-	-	-
R44140712[393]	1 "	R4133004	R4133004	R4166822	NR	-	-	-	-
R44145139[405]		-	-	R4011140	R4011147	-	-	-	-
R44145049[381]	56mm	R4255749	R4255748	R4012261	R4012260[363]	R4113355[228]	-	R4578325	R4578324
R42145143	51mm	R4255795	R4255794	R4012266	R4012265[363]	R4113355[228]	-	R4578514	R4578513
R42145144	51mm	R4255795	R4255794	R4012266	R4012265[363]	R4113263[229]	-	R4578514	R4578513

253 - Single Rear Wheels, 4 Wheel Antilock Brakes
363 - Piston includes Boots and Seals
376 - Two wheel drive, under 8500 lb. GVW / CENTER
378 - Four wheel drive, under 8500 lb. GVW / CENTER
381 - Rotor and Hub One Piece Assembly W/O ABS Ring
393 - 7 Hole Mount
405 - Rotor Only

MAKE MODEL YEAR AXLE CODE AXLE WEIGHT	AXLE & BRK. TYPE	BRK. MFG.	BRAKE SIZE	FMSI	MERITOR DISC PAD OR BRAKE SHOE	MERITOR GUIDE PIN OR RETURN SPRING KIT	MERITOR CALIPER HWD. KIT OR RETURN SPRING KIT	MERITOR ADJUSTER KIT (LEFT WHEEL)	MERITOR ADJUSTER KIT (RIGHT WHEEL)
FORD(Cont.)									
F200, F250 SERIES PICKUP-3/4 TON(Cont.)									
1997									
4 x 4	Fd	TRW		7752 - D702	MD702	NR	NR	NR	NR
4 x 4									
Over 8500 lb. GVW	Fd	TRW		7535 - D655	MD655	NR	NR	NR	NR
4 x 4									
under 8500 lb. GVW	Fd	TRW		7752 - D702	MD702	NR	NR	NR	NR
DRW									
Over 8500 lb. GVW	Ra		12 " x 3 "	2140T - 314	R46358	R40H608	R40H4087	R40H2598	R40H2599
Over 8500 lb. GVW	Ra		12 " x 3 "	2140T - 314	R46358	R40H608	R40H4087	R40H2598	R40H2599
Rear Disc Brake	Rd	TRW		D711	MD711	-	-	-	-
under 8500 lb. GVW	Ra		12 " x 2-1/2 "	2146AT - 316	R46357	R40H546	R40H4087	R40H2598	R40H2599
4x4									
Below 8,500 lb. GVW	Fd			7576 - D702	MD702	R4011234	R4011133	NR	NR
	Fd			7576 - D702	MD702	R4011234	R4011133	NR	NR
8,500 lb. GVW and Up	Fd			7535 - D655	MD655	R40H5735	R4011132	NR	NR
	Fd			7535 - D655	MD655	R40H5735	R4011132	NR	NR
1996									
	Fd			7535 - D655	MD655	R40H5735	R4011132	NR	NR
	Fd			7535 - D655	MD655	R40H5735	R4011132	NR	NR
	Fd			7535 - D655	MD655	R40H5735	R4011132	NR	NR
	Fd			7535 - D655	MD655	R40H5735	R4011132	NR	NR
	Fd			7535 - D655	MD655	R40H5735	R4011132	NR	NR
	Fd			7535 - D655	MD655	R40H5735	R4011132	NR	NR
	Fd			7535 - D655	MD655	R40H5735	R4011132	NR	NR
	Fd			7535 - D655	MD655	R40H5735	R4011132	NR	NR
	Ra		12 " x 3 "	2140T - 314	R46358	R40H608	R40H4087	R40H2598	R40H2599
	Ra		12 " x 3 "	2140T - 314	R46358	R40H608	R40H4087	R40H2598	R40H2599
	Ra		12 " x 3 "	2140T - 314	R46358	R40H608	R40H4087	R40H2598	R40H2599
	Ra	BX	12 " x 2-1/2 "	2146AT - 316	R46357	R40H546	R40H4087	R40H2598	R40H2599
	Ra	BX	12 " x 2-1/2 "	2146AT - 316	R46357	R40H546	R40H4087	R40H2598	R40H2599
	Ra	BX	12 " x 2-1/2 "	2146AT - 316	R46357	R40H546	R40H4087	R40H2598	R40H2599
1995									
	Fd			7535 - D655	MD655	R40H5735	R4011132	NR	NR
	Fd			7535 - D655	MD655	R40H5735	R4011132	NR	NR
	Fd			7535 - D655	MD655	R40H5735	R4011132	NR	NR
	Fd			7535 - D655	MD655	R40H5735	R4011132	NR	NR
	Fd			7535 - D655	MD655	R40H5735	R4011132	NR	NR
	Fd			7535 - D655	MD655	R40H5735	R4011132	NR	NR
	Fd			7535 - D655	MD655	R40H5735	R4011132	NR	NR
	Fd			7535 - D655	MD655	R40H5735	R4011132	NR	NR
	Ra		12 " x 3 "	2140T - 314	R46358	R40H608	R40H4087	R40H2598	R40H2599
	Ra		12 " x 3 "	2140T - 314	R46358	R40H608	R40H4087	R40H2598	R40H2599
	Ra		12 " x 3 "	2140T - 314	R46358	R40H608	R40H4087	R40H2598	R40H2599
	Ra	BX	12 " x 2-1/2 "	2146AT - 316	R46357	R40H546	R40H4087	R40H2598	R40H2599
	Ra	BX	12 " x 2-1/2 "	2146AT - 316	R46357	R40H546	R40H4087	R40H2598	R40H2599
	Ra	BX	12 " x 2-1/2 "	2146AT - 316	R46357	R40H546	R40H4087	R40H2598	R40H2599
1994									
	Fd	DN		7330 - D450	MD450	R407130	60050135	NR	NR
	Fd	DN		7330 - D450	MD450	R407130	60050135	NR	NR
	Fd	DN		7330 - D450	MD450	R407130	60050135	NR	NR
	Fd	DN		7330 - D450	MD450	R407130	60050135	NR	NR
	Fd	DN		7330 - D450	MD450	R407130	60050135	NR	NR
	Fd	DN		7330 - D450	MD450	R407130	60050135	NR	NR
	Fd	DN		7330 - D450	MD450	R407130	60050135	NR	NR
	Fd	DN		7330 - D450	MD450	R407130	60050135	NR	NR
	Ra		12 " x 3 "	2140T - 314	R46358	R40H546	R40H4087	R40H2598	R40H2599
	Ra	BX	12 " x 2-1/2 "	2146AT - 316	R46357	R40H608	R40H4087	R40H2598	R40H2599
	Ra	BX	12 " x 2-1/2 "	2146AT - 316	R46357	R40H608	R40H4087	R40H2598	R40H2599
1993									
	Fd	DN		7330 - D450	MD450	R407130	60050135	NR	NR
	Fd	DN		7330 - D450	MD450	R407130	60050135	NR	NR
	Fd	DN		7330 - D450	MD450	R407130	60050135	NR	NR
	Fd	DN		7330 - D450	MD450	R407130	60050135	NR	NR
	Fd	DN		7330 - D450	MD450	R407130	60050135	NR	NR
	Fd	DN		7330 - D450	MD450	R407130	60050135	NR	NR

156 - 4x2 With Single Rear Wheels
197 - 8.80", 10.25" Ring Gear
217 - Power Brakes Except Speed Control
175 - Rotor Only; 3.54, 4.09 Ratio
211 - Manual Brakes, Stripped Chassis Except Speed Control
226 - Cutaway, Stripped Chassis With Speed Control
189 - Single Rear Wheels, 10 1/4" Ring Gear
213 - Manual Brakes, Speed Control
228 - Except Speed Control

MERITOR DRUM OR ROTOR NO.	CALIPER OR CYLINDER BORE SIZE	MERITOR CALIPER OR WHEEL CYLINDER (LEFT)	MERITOR CALIPER OR WHEEL CYLINDER (RIGHT)	MERITOR CALIPER OR WHEEL CYLINDER REPAIR KIT	MERITOR CALIPER PISTON	MERITOR MASTER CYLINDER	MERITOR MASTER CYLINDER KIT	MERITOR BRAKE HOSE (LEFT)	MERITOR BRAKE HOSE (RIGHT)
									FORD(Cont.)
									F200, F250 SERIES PICKUP-3/4 TON(Cont.)
R44145279	51mm	R4255795	R4255794	R4012266	R4012265[363]	R4110382[228]	-	R4578516	R4578515
R44145055[405]	56mm	R4255749	R4255748	R4012261	R4012260[363]	R4110382[228]	-	R4578327	R4578326
R44145055[405]	51mm	R4255795	R4255794	R4012266	R4012265[363]	R4110382[228]	-	R4578516	R4578515
R44140504[189]		R4134139	R4134140	R418188	NR	-	-	R4578701[378]	R4512486
R44140504[189]	1-3/16 "	R4133945	R4133946	R418188	NR	-	-	R4578700[376]	R4512486
R44145139[405]		-	-	-	-	-	-	-	-
R44140712[393]	1 "	R4133004	R4133004	R4166822	NR	-	-	R4578184	R4578183
R44145145[405]		N/A	N/A	R4011139	R4011145	R4113263[239]	N/A	R4578516	R4578515
N/A		N/A	N/A	R4011139	R4011145	R4110382[213]	N/A	R4578514	R4578513
N/A	2-11/32 "	R42R55496	R42R55497	R4011237	R44141808	R4110384[238]	N/A	R4578327	R4578326
N/A	2-11/32 "	R42R55496	R42R55497	R4011237	R44141808	R4113355[234]	N/A	R4578325	R4578324
R44145055[405]	2-11/32 "	R42R55496	R42R55497	R4011237	R44141808	R4110384[238]	N/A	R4578327	R4578326
R44145055[405]	2-11/32 "	R42R55496	R42R55497	R4011237	R44141808	R4113263[239]	N/A	R4578327	R4578326
R44145049[381]	2-11/32 "	R42R55496	R42R55497	R4011237	R44141808	R4113355[234]	N/A	R4578324	R4578325
R44145049[381]	2-11/32 "	R42R55496	R42R55497	R4011237	R44141808	R4110382[213]	N/A	R4578324	R4578325
R44145055[405]	2-11/32 "	R42R55496	R42R55497	R4011237	R44141808	R4110382[213]	N/A	R4578327	R4578326
R44145055[405]	2-11/32 "	R42R55496	R42R55497	R4011237	R44141808	R4113355[234]	N/A	R4578327	R4578326
R44145049[381]	2-11/32 "	R42R55496	R42R55497	R4011237	R44141808	R4113263[239]	N/A	R4578324	R4578325
R44145049[381]	2-11/32 "	R42R55496	R42R55497	R4011237	R44141808	R4110384[238]	N/A	R4578324	R4578325
R44140504[189]	1-1/8 "	R4134139	R4134140[355]	N/A	NR	-	-	R4578183	R4578183
R44140504[189]	1-1/8 "	R4134139	R4134140[355]	N/A	NR	-	-	R4578183	R4578183
R44140504[189]	1 "	R4133004	R4133004	R4166822	NR	-	-	R4578184	R4578184
R44140520[197]	1 "	R4133004	R4133004	R4166822	NR	-	-	R4578184	R4578184
R44140520[197]	1-3/16 "	R4133945	R4133946	R418188	NR	-	-	R4578183	R4578183
R44140520[197]	1-3/16 "	R4133945	R4133946	R418188	NR	-	-	R4578183	R4578183
R44145055[405]	2-11/32 "	R42R55496	R42R55497	R4011237	R44141808	R4110384[238]	N/A	R4578327	R4578326
R44145055[405]	2-11/32 "	R42R55496	R42R55497	R4011237	R44141808	R4113263[239]	N/A	R4578327	R4578326
R44145055[405]	2-11/32 "	R42R55496	R42R55497	R4011237	R44141808	R4113355[234]	N/A	R4578327	R4578326
R44145049[381]	2-11/32 "	R42R55496	R42R55497	R4011237	R44141808	R4110382[213]	N/A	R4578324	R4578325
R44145049[381]	2-11/32 "	R42R55496	R42R55497	R4011237	R44141808	R4113263[239]	N/A	R4578324	R4578325
R44145055[405]	2-11/32 "	R42R55496	R42R55497	R4011237	R44141808	R4110382[213]	N/A	R4578327	R4578326
R44145049[381]	2-11/32 "	R42R55496	R42R55497	R4011237	R44141808	R4110384[238]	N/A	R4578324	R4578325
R44145049[381]	2-11/32 "	R42R55496	R42R55497	R4011237	R44141808	R4113355[234]	N/A	R4578324	R4578325
R44140504[189]	1 "	R4133004	R4133004	R4166822	NR	-	-	R4578184	R4578184
R44140504[189]	1-1/8 "	R4134139	R4134140[355]	N/A	NR	-	-	R4578183	R4578183
R44140504[189]	1-1/8 "	R4134139	R4134140[355]	N/A	NR	-	-	R4578183	R4578183
R44140520[197]	1-3/16 "	R4133945	R4133946	R418188	NR	-	-	R4578183	R4578183
R44140520[197]	1-3/16 "	R4133945	R4133946	R418188	NR	-	-	R4578183	R4578183
R44140520[197]	1 "	R4133004	R4133004	R4166822	NR	-	-	R4578184	R4578184
R44141487[381]	2-3/16 "	R42R55461P	R42R55460P	R4166713	R4090180P[290]	R4112840[226]	N/A	R4578169[156]	R4577235
R44141237[175]	2-3/16 "	R42R55461P	R42R55460P	R4166713	R4090180P[290]	R4112198[217]	N/A	R4578001[247]	R4577311
R44141487[381]	2-3/16 "	R42R55461P	R42R55460P	R4166713	R4090180P[290]	R4112842[229]	N/A	R4578169[156]	R4577235
R44141487[381]	2-3/16 "	R42R55461P	R42R55460P	R4166713	R4090180P[290]	R4112200[211]	N/A	R4578169[156]	R4577235
R44141487[381]	2-3/16 "	R42R55461P	R42R55460P	R4166713	R4090180P[290]	R4112198[217]	N/A	R4578169[156]	R4577235
R44141237[175]	2-3/16 "	R42R55461P	R42R55460P	R4166713	R4090180P[290]	R4112840[226]	N/A	R4578001[247]	R4577311
R44141237[175]	2-3/16 "	R42R55461P	R42R55460P	R4166713	R4090180P[290]	R4112842[229]	N/A	R4578001[247]	R4577311
R44141237[175]	2-3/16 "	R42R55461P	R42R55460P	R4166713	R4090180P[290]	R4112200[211]	N/A	R4578001[247]	R4577311
R44140520[197]	1 "	R4133004	R4133004	R4166822	NR	-	-	R4578184	R4578184
R44140504[189]	1-3/16 "	R4133945	R4133946	R418188	NR	-	-	R4578183	R4578183
R44140504[189]	1-1/16 "	R4133595	R4133596	N/A	NR	-	-	R4578183	R4578183
R44141237[175]	2-3/16 "	R42R55461P	R42R55460P	R4166713	R4090180P[290]	R4112842[229]	N/A	R4578001[247]	R4577311
R44141237[175]	2-3/16 "	R42R55461P	R42R55460P	R4166713	R4090180P[290]	R4112200[211]	N/A	R4578001[247]	R4577311
R44141237[175]	2-3/16 "	R42R55461P	R42R55460P	R4166713	R4090180P[290]	R4112198[217]	N/A	R4578001[247]	R4577311
R44141237[175]	2-3/16 "	R42R55461P	R42R55460P	R4166713	R4090180P[290]	R4112840[226]	N/A	R4578001[247]	R4577311
R44141487[381]	2-3/16 "	R42R55461P	R42R55460P	R4166713	R4090180P[290]	R4112842[229]	N/A	R4578169[156]	R4577235
R44141487[381]	2-3/16 "	R42R55461P	R42R55460P	R4166713	R4090180P[290]	R4112198[217]	N/A	R4578169[156]	R4577235

378 - Four wheel drive, under 8500 lb. GVW / CENTER
405 - Rotor Only
355 - Single Rear Wheels with 12 x 3" Brakes
381 - Rotor and Hub One Piece Assembly W/O ABS Ring
247 - 4x4, Dual Rear Wheels
363 - Piston includes Boots and Seals
393 - 7 Hole Mount
290 - Use E-11222 for High Temperature Boots
376 - Two wheel drive, under 8500 lb. GVW / CENTER

MAKE MODEL YEAR AXLE CODE AXLE WEIGHT	AXLE & BRK. TYPE	BRK. MFG.	BRAKE SIZE	FMSI	MERITOR DISC PAD OR BRAKE SHOE	MERITOR GUIDE PIN OR RETURN SPRING KIT	MERITOR CALIPER HWD. KIT OR RETURN SPRING KIT	MERITOR ADJUSTER KIT (LEFT WHEEL)	MERITOR ADJUSTER KIT (RIGHT WHEEL)
FORD(Cont.)									
F200, F250 SERIES PICKUP-3/4 TON(Cont.)									
1993									
	Fd	DN		7330 - D450	MD450	R407130	60050135	NR	NR
	Fd	DN		7330 - D450	MD450	R407130	60050135	NR	NR
	Ra		12 " x 3 "	2140T - 314	R46358	R40H546	R40H4087	R40H2598	R40H2599
	Ra	BX	12 " x 2-1/2 "	2146AT - 316	R46357	R40H608	R40H4087	R40H2598	R40H2599
	Ra	BX	12 " x 2-1/2 "	2146AT - 316	R46357	R40H608	R40H4087	R40H2598	R40H2599
1992									
	Fd	DN		7330 - D450	MD450	R407130	60050135	NR	NR
	Fd	DN		7330 - D450	MD450	R407130	60050135	NR	NR
	Fd	DN		7330 - D450	MD450	R407130	60050135	NR	NR
	Fd	DN		7330 - D450	MD450	R407130	60050135	NR	NR
	Fd	DN		7330 - D450	MD450	R407130	60050135	NR	NR
	Fd	DN		7330 - D450	MD450	R407130	60050135	NR	NR
	Fd	DN		7330 - D450	MD450	R407130	60050135	NR	NR
	Fd	DN		7330 - D450	MD450	R407130	60050135	NR	NR
	Ra		12 " x 3 "	2140T - 314	R46358	R40H546	R40H4087	R40H2598	R40H2599
	Ra	BX	12 " x 2-1/2 "	2146AT - 316	R46357	R40H608	R40H4087	R40H2598	R40H2599
	Ra	BX	12 " x 2-1/2 "	2146AT - 316	R46357	R40H608	R40H4087	R40H2598	R40H2599
1991									
	Fd	DN		7330 - D450	MD450	R407130	60050135	NR	NR
	Fd	DN		7330 - D450	MD450	R407130	60050135	NR	NR
	Fd	DN		7330 - D450	MD450	R407130	60050135	NR	NR
	Fd	DN		7330 - D450	MD450	R407130	60050135	NR	NR
	Ra	BX	12 " x 2-1/2 "	2146AT - 357	R46357	R40H546	R40H7146	R40H2598	R40H2599
	Ra	BX	12 " x 2-1/2 "	2146AT - 357	R46357	R40H546	R40H7146	R40H2598	R40H2599
	Ra	BX	12 " x 2-1/2 "	2146AT - 357	R46357	R40H546	R40H7146	R40H2598	R40H2599
	Ra	BX	12 " x 2-1/2 "	2146AT - 357	R46357	R40H546	R40H7146	R40H2598	R40H2599
	Ra	BX	12 " x 3 "	2140AT - 358	R46358	R40H608	R40H7181	R40H2598	R40H2599
	Ra	BX	12 " x 3 "	2140AT - 358	R46358	R40H608	R40H7181	R40H2598	R40H2599
	Ra	BX	12 " x 3 "	2140AT - 358	R46358	R40H608	R40H7181	R40H2598	R40H2599
	Ra	BX	12 " x 3 "	2140AT - 358	R46358	R40H608	R40H7181	R40H2598	R40H2599
After 3/91	Fd	DN		7330 - D450	MD450	R407130	60050135	NR	NR
	Fd	DN		7330 - D450	MD450	R407130	60050135	NR	NR
	Fd	DN		7330 - D450	MD450	R407130	60050135	NR	NR
	Fd	DN		7330 - D450	MD450	R407130	60050135	NR	NR
	Fd	DN		7330 - D450	MD450	R407130	60050135	NR	NR
	Fd	DN		7330 - D450	MD450	R407130	60050135	NR	NR
	Fd	DN		7330 - D450	MD450	R407130	60050135	NR	NR
	Fd	DN		7330 - D450	MD450	R407130	60050135	NR	NR
	Ra		12 " x 3 "	2140T - 314	R46358	R40H546	R40H4087	R40H2598	R40H2599
	Ra	BX	12 " x 2-1/2 "	2146AT - 316	R46357	R40H608	R40H4087	R40H2598	R40H2599
	Ra	BX	12 " x 2-1/2 "	2146AT - 316	R46357	R40H608	R40H4087	R40H2598	R40H2599
1990									
	Fd	DN		7330 - D450	MD450	R407130	60050135	NR	NR
	Fd	DN		7054 - D120	MD120	R407130	R407130	NR	NR
	Fd	DN		7054 - D120	MD120	R407130	R407130	NR	NR
	Fd	DN		7330 - D450	MD450	R407130	60050135	NR	NR
	Ra	BX	12 " x 2-1/2 "	2146AT - 357	R46357	R40H546	R40H7146	R40H2598	R40H2599
	Ra	BX	12 " x 2-1/2 "	2146AT - 357	R46357	R40H546	R40H7146	R40H2598	R40H2599
	Ra	BX	12 " x 2-1/2 "	2146AT - 357	R46357	R40H546	R40H7146	R40H2598	R40H2599
	Ra	BX	12 " x 2-1/2 "	2146AT - 357	R46357	R40H546	R40H7146	R40H2598	R40H2599
	Ra	BX	12 " x 3 "	2140AT - 358	R46358	R40H608	R40H7181	R40H2598	R40H2599
	Ra	BX	12 " x 3 "	2140AT - 358	R46358	R40H608	R40H7181	R40H2598	R40H2599
	Ra	BX	12 " x 3 "	2140AT - 358	R46358	R40H608	R40H7181	R40H2598	R40H2599
	Ra	BX	12 " x 3 "	2140AT - 358	R46358	R40H608	R40H7181	R40H2598	R40H2599
1989									
	Fd	DN		7330 - D450	MD450	R407130	60050135	NR	NR
	Fd	DN		7054 - D120	MD120	R407130	R407130	NR	NR
	Fd	DN		7330 - D450	MD450	R407130	60050135	NR	NR
	Fd	DN		7054 - D120	MD120	R407130	R407130	NR	NR
	Ra	BX	12 " x 2-1/2 "	2146AT - 357	R46357	R40H546	R40H7146	R40H2598	R40H2599
	Ra	BX	12 " x 2-1/2 "	2146AT - 357	R46357	R40H546	R40H7146	R40H2598	R40H2599
	Ra	BX	12 " x 2-1/2 "	2146AT - 357	R46357	R40H546	R40H7146	R40H2598	R40H2599
	Ra	BX	12 " x 2-1/2 "	2146AT - 357	R46357	R40H546	R40H7146	R40H2598	R40H2599
	Ra	BX	12 " x 3 "	2140AT - 358	R46358	R40H608	R40H7181	R40H2598	R40H2599

41 - Aluminum piston
167 - Except 10 1/4" Ring Gear
195 - 7.50", 9.75" Ring Gear
54 - Manual Brakes
175 - Rotor Only; 3.54, 4.09 Ratio
197 - 8.80", 10.25" Ring Gear
156 - 4x2 With Single Rear Wheels
189 - Single Rear Wheels, 10 1/4" Ring Gear
211 - Manual Brakes, Stripped Chassis Except Speed Control

MERITOR DRUM OR ROTOR NO.	CALIPER OR CYLINDER BORE SIZE	MERITOR CALIPER OR WHEEL CYLINDER (LEFT)	MERITOR CALIPER OR WHEEL CYLINDER (RIGHT)	MERITOR CALIPER OR WHEEL CYLINDER REPAIR KIT	MERITOR CALIPER PISTON	MERITOR MASTER CYLINDER	MERITOR MASTER CYLINDER KIT	MERITOR BRAKE HOSE (LEFT)	MERITOR BRAKE HOSE (RIGHT)
									FORD(Cont.)
									F200, F250 SERIES PICKUP-3/4 TON(Cont.)
R44141487[381]	2-3/16 "	R42R55461P	R42R55460P	R4166713	R4090180P[290]	R4112200[211]	N/A	R4578169[156]	R4577235
R44141487[381]	2-3/16 "	R42R55461P	R42R55460P	R4166713	R4090180P[290]	R4112840[226]	N/A	R4578169[156]	R4577235
R44140520[197]	1 "	R4133004	R4133004	R4166822	NR	-	-	R4578184	R4578184
R44140504[189]	1-3/16 "	R4133945	R4133946	R418188	NR	-	-	R4578183	R4578183
R44140504[189]	1-1/16 "	R4133595	R4133596	N/A	NR	-	-	R4578183	R4578183
R44141487[381]	2-3/16 "	R42R55461P	R42R55460P	R4166713	R4090180P[290]	R4112198[217]	N/A	R4578169[156]	R4577235
R44141237[175]	2-3/16 "	R42R55461P	R42R55460P	R4166713	R4090180P[290]	R4112842[229]	N/A	R4578001[247]	R4577311
R44141237[175]	2-3/16 "	R42R55461P	R42R55460P	R4166713	R4090180P[290]	R4112198[217]	N/A	R4578001[247]	R4577311
R44141237[175]	2-3/16 "	R42R55461P	R42R55460P	R4166713	R4090180P[290]	R4112840[226]	N/A	R4578001[247]	R4577311
R44141237[175]	2-3/16 "	R42R55461P	R42R55460P	R4166713	R4090180P[290]	R4112200[211]	N/A	R4578001[247]	R4577311
R44141487[381]	2-3/16 "	R42R55461P	R42R55460P	R4166713	R4090180P[290]	R4112200[211]	N/A	R4578169[156]	R4577235
R44141487[381]	2-3/16 "	R42R55461P	R42R55460P	R4166713	R4090180P[290]	R4112842[229]	N/A	R4578169[156]	R4577235
R44141487[381]	2-3/16 "	R42R55461P	R42R55460P	R4166713	R4090180P[290]	R4112840[226]	N/A	R4578169[156]	R4577235
R44140520[197]	1 "	R4133004	R4133004	R4166822	NR	-	-	R4578184	R4578184
R44140504[189]	1-1/16 "	R4133595	R4133596	N/A	NR	-	-	R4578183	R4578183
R44140504[189]	1-3/16 "	R4133945	R4133946	R418188	NR	-	-	R4578183	R4578183
R44141487[381]	2-3/16 "	R42R55461P	R42R55460P	R4166713	R4090180P[290]	-	-	-	-
R44141237[175]	2-3/16 "	R42R55461P	R42R55460P	R4166713	R4090180P[290]	-	-	-	-
R44141237[175]	2-3/16 "	R42R55461P	R42R55460P	R4166713	R4090180P[290]	-	-	-	-
R44141487[381]	2-3/16 "	R42R55461P	R42R55460P	R4166713	R4090180P[290]	-	-	-	-
R44140520[197]	1 "	R4133004	R4133004	R4166822	NR	-	-	R4577245	R4577245
R44140397[195]	1 "	R4133004	R4133004	R4166822	NR	-	-	R4578666	R4578666
R44140520[197]	1 "	R4133004	R4133004	R4166822	NR	-	-	R4578666	R4578666
R44140397[195]	1 "	R4133004	R4133004	R4166822	NR	-	-	R4577245	R4577245
R44140504[189]	1 "	R4133725	R4133726	R4166822	NR	-	-	R4577245	R4577245
R44140344[167]	1 "	R4133725	R4133726	R4166822	NR	-	-	R4578666	R4578666
R44140504[189]	1 "	R4133725	R4133726	R4166822	NR	-	-	R4578666	R4578666
R44140344[167]	1 "	R4133725	R4133726	R4166822	NR	-	-	R4577245	R4577245
R44141487[381]	2-3/16 "	R42R55461P	R42R55460P	R4166713	R4090180P[290]	R4112840[226]	N/A	R4578169[156]	R4577235
R44141237[175]	2-3/16 "	R42R55461P	R42R55460P	R4166713	R4090180P[290]	R4112198[217]	N/A	R4578001[247]	R4577311
R44141487[381]	2-3/16 "	R42R55461P	R42R55460P	R4166713	R4090180P[290]	R4112842[229]	N/A	R4578169[156]	R4577235
R44141487[381]	2-3/16 "	R42R55461P	R42R55460P	R4166713	R4090180P[290]	R4112200[211]	N/A	R4578169[156]	R4577235
R44141237[175]	2-3/16 "	R42R55461P	R42R55460P	R4166713	R4090180P[290]	R4112840[226]	N/A	R4578001[247]	R4577311
R44141237[175]	2-3/16 "	R42R55461P	R42R55460P	R4166713	R4090180P[290]	R4112200[211]	N/A	R4578001[247]	R4577311
R44141237[175]	2-3/16 "	R42R55461P	R42R55460P	R4166713	R4090180P[290]	R4112842[229]	N/A	R4578001[247]	R4577311
R44141487[381]	2-3/16 "	R42R55461P	R42R55460P	R4166713	R4090180P[290]	R4112198[217]	N/A	R4578169[156]	R4577235
R44140520[197]	1 "	R4133004	R4133004	R4166822	NR	-	-	R4578666[337]	R4578666
R44140504[189]	1-1/16 "	R4133595	R4133596	N/A	NR	-	-	R4577245	R4577245
R44140504[189]	1-3/16 "	R4133945	R4133946	R418188	NR	-	-	R451537[335]	R451537
R44141487[381]	2-3/16 "	R42R55461	R42R55460	R4166713	R4090029[290]	R148228[54]	N/A	R4577235[259]	R4577235
R44141237[175]	2-3/16 "	R42R55456	R42R55456	R4166713	R4090029[41]	R4112198[217]	N/A	R4577235[259]	R4577235
R44141237[175]	2-3/16 "	R42R55456	R42R55456	R4166713	R4090029[41]	R4112198[217]	N/A	R4577311[259]	R4577311
R44141237[175]	2-3/16 "	R42R55461	R42R55460	R4166713	R4090029[290]	R148228[54]	N/A	R4577311[259]	R4577311
R44140520[197]	1 "	R4133004	R4133004	R4166822	NR	-	-	R4577245	R4577245
R44140520[197]	1 "	R4133004	R4133004	R4166822	NR	-	-	R4577245	R4577245
R44140397[195]	1 "	R4133004	R4133004	R4166822	NR	-	-	R4577245	R4577245
R44140397[195]	1 "	R4133004	R4133004	R4166822	NR	-	-	R451537[335]	R451537
R44140344[167]	1 "	R4133725	R4133726	R4166822	NR	-	-	R4577245	R4577245
R44140344[167]	1 "	R4133725	R4133726	R4166822	NR	-	-	R4578666[337]	R4578666
R44140504[189]	1 "	R4133725	R4133726	R4166822	NR	-	-	R4578666[337]	R4578666
R44140504[189]	1 "	R4133725	R4133726	R4166822	NR	-	-	R451537[335]	R451537
R44141487[381]	2-3/16 "	R42R55461	R42R55460	R4166713	R4090029[290]	R148228[54]	N/A	R4577235[259]	R4577235
R44141237[175]	2-3/16 "	R42R55456	R42R55456	R4166713	R4090029[41]	R4112198[217]	N/A	R4577311[259]	R4577311
R44141237[175]	2-3/16 "	R42R55461	R42R55460	R4166713	R4090029[290]	R148228[54]	N/A	R4577311[259]	R4577311
R44141237[175]	2-3/16 "	R42R55456	R42R55456	R4166713	R4090029[41]	R4112198[217]	N/A	R4577235[259]	R4577235
R44140520[197]	1 "	R4133004	R4133004	R4166822	NR	-	-	R4578666	R4578666
R44140397[195]	1 "	R4133004	R4133004	R4166822	NR	-	-	R4578666	R4578666
R44140397[195]	1 "	R4133004	R4133004	R4166822	NR	-	-	R4577245	R4577245
R44140520[197]	1 "	R4133004	R4133004	R4166822	NR	-	-	R4577245	R4577245
R44140504[189]	1 "	R4133725	R4133726	R4166822	NR	-	-	R4578666	R4578666

217 - Power Brakes Except Speed Control
247 - 4x4, Dual Rear Wheels
335 - 4x4, from 4/89
Contact our Customer Service Teams
1-888-725-9355

226 - Cutaway, Stripped Chassis With Speed Control
259 - 4x2, Except Monobeam Axle
337 - 4x4, before 4/89

229 - Speed Control
290 - Use E-11222 for High Temperature Boots
381 - Rotor and Hub One Piece Assembly W/O ABS Ring
www.XpresswayPlus.com

MAKE MODEL YEAR AXLE CODE AXLE WEIGHT	AXLE & BRK. TYPE	BRK. MFG.	BRAKE SIZE	FMSI	MERITOR DISC PAD OR BRAKE SHOE	MERITOR GUIDE PIN OR RETURN SPRING KIT	MERITOR CALIPER HWD. KIT OR RETURN SPRING KIT	MERITOR ADJUSTER KIT (LEFT WHEEL)	MERITOR ADJUSTER KIT (RIGHT WHEEL)
FORD(Cont.)									
F200, F250 SERIES PICKUP-3/4 TON(Cont.)									
1989									
	Ra	BX	12 " x 3 "	2140AT - 358	R46358	R40H608	R40H7181	R40H2598	R40H2599
	Ra	BX	12 " x 3 "	2140AT - 358	R46358	R40H608	R40H7181	R40H2598	R40H2599
	Ra	BX	12 " x 3 "	2140AT - 358	R46358	R40H608	R40H7181	R40H2598	R40H2599
1988									
	Fd	DN		7054 - D120	MD120	R407130	R407130	NR	NR
	Fd	DN		7054 - D120	MD120	R407130	R407130	NR	NR
	Fd	DN		7054 - D120	MD120	R407130	R407130	NR	NR
	Fd	DN		7054 - D120	MD120	R407130	R407130	NR	NR
	Fd	DN		7054 - D120	MD120	R407130	R407130	NR	NR
	Fd	DN		7054 - D120	MD120	R407130	R407130	NR	NR
	Ra	BX	12 " x 2-1/2 "	2146AT - 357	R46357	R40H546	R40H7146	R40H2598	R40H2599
	Ra	BX	12 " x 2-1/2 "	2146AT - 357	R46357	R40H546	R40H7146	R40H2598	R40H2599
	Ra	BX	12 " x 2-1/2 "	2146AT - 357	R46357	R40H546	R40H7146	R40H2598	R40H2599
	Ra	BX	12 " x 2-1/2 "	2146AT - 357	R46357	R40H546	R40H7146	R40H2598	R40H2599
	Ra	BX	12 " x 2-1/2 "	2146AT - 357	R46357	R40H546	R40H7146	R40H2598	R40H2599
	Ra	BX	12 " x 2-1/2 "	2146AT - 357	R46357	R40H546	R40H7146	R40H2598	R40H2599
	Ra	BX	12 " x 3 "	2140AT - 358	R46358	R40H608	R40H7181	R40H2598	R40H2599
	Ra	BX	12 " x 3 "	2140AT - 358	R46358	R40H608	R40H7181	R40H2598	R40H2599
	Ra	BX	12 " x 3 "	2140AT - 358	R46358	R40H608	R40H7181	R40H2598	R40H2599
	Ra	BX	12 " x 3 "	2140AT - 358	R46358	R40H608	R40H7181	R40H2598	R40H2599
	Ra	BX	12 " x 3 "	2140AT - 358	R46358	R40H608	R40H7181	R40H2598	R40H2599
	Ra	BX	12 " x 3 "	2140AT - 358	R46358	R40H608	R40H7181	R40H2598	R40H2599
1987									
	Fd	DN		7054 - D120	MD120	R407130	R407130	NR	NR
	Fd	DN		7054 - D120	MD120	R407130	R407130	NR	NR
	Fd	DN		7054 - D120	MD120	R407130	R407130	NR	NR
	Fd	DN		7054 - D120	MD120	R407130	R407130	NR	NR
	Ra	BX	12 " x 2-1/2 "	2146AT - 357	R46357	R40H546	R40H7146	R40H2598	R40H2599
	Ra	BX	12 " x 2-1/2 "	2146AT - 357	R46357	R40H546	R40H7146	R40H2598	R40H2599
	Ra	BX	12 " x 2-1/2 "	2146AT - 357	R46357	R40H546	R40H7146	R40H2598	R40H2599
	Ra	BX	12 " x 2-1/2 "	2146AT - 357	R46357	R40H546	R40H7146	R40H2598	R40H2599
	Ra	BX	12 " x 3 "	2140AT - 358	R46358	R40H608	R40H7181	R40H2598	R40H2599
	Ra	BX	12 " x 3 "	2140AT - 358	R46358	R40H608	R40H7181	R40H2598	R40H2599
	Ra	BX	12 " x 3 "	2140AT - 358	R46358	R40H608	R40H7181	R40H2598	R40H2599
	Ra	BX	12 " x 3 "	2140AT - 358	R46358	R40H608	R40H7181	R40H2598	R40H2599
1986									
	Fd	DN		7054 - D120	MD120	R407130	R407130	NR	NR
	Fd	DN		7054 - D120	MD120	R407130	R407130	NR	NR
	Fd	DN		7054 - D120	MD120	R407130	R407130	NR	NR
	Fd	DN		7054 - D120	MD120	R407130	R407130	NR	NR
	Ra	BX	12 " x 2-1/2 "	2146AT - 357	R46357	R40H546	R40H7146	R40H2598	R40H2599
	Ra	BX	12 " x 2-1/2 "	2146AT - 357	R46357	R40H546	R40H7146	R40H2598	R40H2599
	Ra	BX	12 " x 2-1/2 "	2146AT - 357	R46357	R40H546	R40H7146	R40H2598	R40H2599
	Ra	BX	12 " x 2-1/2 "	2146AT - 357	R46357	R40H546	R40H7146	R40H2598	R40H2599
	Ra	BX	12 " x 3 "	2140AT - 358	R46358	R40H608	R40H7181	R40H2598	R40H2599
	Ra	BX	12 " x 3 "	2140AT - 358	R46358	R40H608	R40H7181	R40H2598	R40H2599
	Ra	BX	12 " x 3 "	2140AT - 358	R46358	R40H608	R40H7181	R40H2598	R40H2599
	Ra	BX	12 " x 3 "	2140AT - 358	R46358	R40H608	R40H7181	R40H2598	R40H2599
1985									
	Fd	BX		788 - D50	MD50	R40H05025	R40H5545	NR	NR
	Fd	BX		788 - D50	MD50	R40H05025	R40H5545	NR	NR
	Fd	DN		7054 - D120	MD120	R40H05025	60050135	NR	NR
	Fd	DN		7054 - D120	MD120	R40H05025	60050135	NR	NR
	Fd	DN		7054 - D120	MD120	R40H05025	60050135	NR	NR
	Ra	BX	12 " x 2-1/2 "	2146AT - 357	R46357	R40H546	R40H7146	R40H2598	R40H2599
	Ra	BX	12 " x 2-1/2 "	2146AT - 357	R46357	R40H546	R40H7146	R40H2598	R40H2599
	Ra	BX	12 " x 2-1/2 "	2146AT - 357	R46357	R40H546	R40H7146	R40H2598	R40H2599
	Ra	BX	12 " x 2-1/2 "	2146AT - 357	R46357	R40H546	R40H7146	R40H2598	R40H2599
	Ra	BX	12 " x 2-1/2 "	2146AT - 357	R46357	R40H546	R40H7146	R40H2598	R40H2599
	Ra	BX	12 " x 2-1/2 "	2146AT - 357	R46357	R40H546	R40H7146	R40H2598	R40H2599
	Ra	BX	12 " x 3 "	2140AT - 358	R46358	R40H608	R40H7181	R40H2598	R40H2599
	Ra	BX	12 " x 3 "	2140AT - 358	R46358	R40H608	R40H7181	R40H2598	R40H2599
	Ra	BX	12 " x 3 "	2140AT - 358	R46358	R40H608	R40H7181	R40H2598	R40H2599
	Ra	BX	12 " x 3 "	2140AT - 358	R46358	R40H608	R40H7181	R40H2598	R40H2599

41 - Aluminum piston
175 - Rotor Only; 3.54, 4.09 Ratio
197 - 8.80", 10.25" Ring Gear
54 - Manual Brakes
189 - Single Rear Wheels, 10 1/4" Ring Gear
199 - For Steel Version use R4090019S
167 - Except 10 1/4" Ring Gear
195 - 7.50", 9.75" Ring Gear
217 - Power Brakes Except Speed Control

MERITOR DRUM OR ROTOR NO.	CALIPER OR CYLINDER BORE SIZE	MERITOR CALIPER OR WHEEL CYLINDER (LEFT)	MERITOR CALIPER OR WHEEL CYLINDER (RIGHT)	MERITOR CALIPER OR WHEEL CYLINDER REPAIR KIT	MERITOR CALIPER PISTON	MERITOR MASTER CYLINDER	MERITOR MASTER CYLINDER KIT	MERITOR BRAKE HOSE (LEFT)	MERITOR BRAKE HOSE (RIGHT)
FORD(Cont.)									
F200, F250 SERIES PICKUP-3/4 TON(Cont.)									
R44140344[167]	1 "	R4133725	R4133726	R4166822	NR	-	-	R4578666	R4578666
R44140504[189]	1 "	R4133725	R4133726	R4166822	NR	-	-	R4577245	R4577245
R44140344[167]	1 "	R4133725	R4133726	R4166822	NR	-	-	R4577245	R4577245
R44141237[175]	2-3/16 "	R42R55456	R42R55456	R4166713	R4090029[41]	R148228[54]	N/A	R4577311[259]	R4577311
R44141487[381]	2-3/16 "	R42R55456	R42R55456	R4166713	R4090029[41]	R148228[54]	N/A	R4577235[259]	R4577235
R44141487[381]	2-3/16 "	R42R55456	R42R55456	R4166713	R4090029[41]	R4112198[217]	N/A	R4577235[259]	R4577235
R44141237[175]	2-3/16 "	R42R55456	R42R55456	R4166713	R4090029[41]	R4112198[217]	N/A	R4577311[259]	R4577311
R44141237[175]	2-3/16 "	R42R55456	R42R55456	R4166713	R4090029[41]	R148228[54]	N/A	R4577311[259]	R4577311
R44141237[175]	2-3/16 "	R42R55456	R42R55456	R4166713	R4090029[41]	R4112198[217]	N/A	R4577311[259]	R4577311
R44140397[195]	1 "	R4133004	R4133004	R4166822	NR	-	-	R4577245	R4577245
R44140520[197]	1 "	R4133004	R4133004	R4166822	NR	-	-	R4578666	R4578666
R44140520[197]	1 "	R4133004	R4133004	R4166822	NR	-	-	R4577245	R4577245
R44140397[195]	1 "	R4133004	R4133004	R4166822	NR	-	-	R4578666	R4578666
R44140397[195]	1 "	R4133004	R4133004	R4166822	NR	-	-	R4577245	R4577245
R44140520[197]	1 "	R4133004	R4133004	R4166822	NR	-	-	R4578666	R4578666
R44140344[167]	1 "	R4133725	R4133726	R4166822	NR	-	-	R4578666	R4578666
R44140504[189]	1 "	R4133725	R4133726	R4166822	NR	-	-	R4577245	R4577245
R44140344[167]	1 "	R4133725	R4133726	R4166822	NR	-	-	R4577245	R4577245
R44140504[189]	1 "	R4133725	R4133726	R4166822	NR	-	-	R4578666	R4578666
R44140504[189]	1 "	R4133725	R4133726	R4166822	NR	-	-	R4577245	R4577245
R44140344[167]	1 "	R4133725	R4133726	R4166822	NR	-	-	R4578666	R4578666
R44141487[381]	2-3/16 "	R42R55456	R42R55456	R4166713	R4090029[41]	R4112198[217]	N/A	R4577235[259]	R4577235
R44141237[175]	2-3/16 "	R42R55456	R42R55456	R4166713	R4090029[41]	R148228[54]	N/A	R4577311[259]	R4577311
R44141487[381]	2-3/16 "	R42R55456	R42R55456	R4166713	R4090029[41]	R148228[54]	N/A	R4577235[259]	R4577235
R44141237[175]	2-3/16 "	R42R55456	R42R55456	R4166713	R4090029[41]	R4112198[217]	N/A	R4577311[259]	R4577311
R44140520[197]	1 "	R4133004	R4133004	R4166822	NR	-	-	R4577247[261]	R4577247
R44140397[195]	1 "	R4133004	R4133004	R4166822	NR	-	-	R4577247[261]	R4577247
R44140397[195]	1 "	R4133004	R4133004	R4166822	NR	-	-	R4577245[261]	R4577245
R44140520[197]	1 "	R4133004	R4133004	R4166822	NR	-	-	R4577245[261]	R4577245
R44140344[167]	1 "	R4133725	R4133726	R4166822	NR	-	-	R4577247[261]	R4577247
R44140504[189]	1 "	R4133725	R4133726	R4166822	NR	-	-	R4577245[261]	R4577245
R44140344[167]	1 "	R4133725	R4133726	R4166822	NR	-	-	R4577245[261]	R4577245
R44140504[189]	1 "	R4133725	R4133726	R4166822	NR	-	-	R4577247[261]	R4577247
R44141487[381]	2-3/16 "	R42R55456	R42R55456	R4166713	R4090029[41]	R4112008[54]	N/A	R4577235[259]	R4577235
R44141237[175]	2-3/16 "	R42R55456	R42R55456	R4166713	R4090029[41]	R4112007[54]	N/A	R4577311[259]	R4577311
R44141487[381]	2-3/16 "	R42R55456	R42R55456	R4166713	R4090029[41]	R4112007[54]	N/A	R4577235[259]	R4577235
R44141237[175]	2-3/16 "	R42R55456	R42R55456	R4166713	R4090029[41]	R4112008[54]	N/A	R4577311[259]	R4577311
R44140397[195]	1 "	R4133004	R4133004	R4166822	NR	-	-	R4577613[263]	R4577613
R44140397[195]	1 "	R4133004	R4133004	R4166822	NR	-	-	R4577612[262]	R4577612
R44140520[197]	1 "	R4133004	R4133004	R4166822	NR	-	-	R4577613[263]	R4577613
R44140520[197]	1 "	R4133004	R4133004	R4166822	NR	-	-	R4577612[262]	R4577612
R44140504[189]	1 "	R4133725	R4133726	R4166822	NR	-	-	R4577613[263]	R4577613
R44140504[189]	1 "	R4133725	R4133726	R4166822	NR	-	-	R4577612[262]	R4577612
R44140344[167]	1 "	R4133725	R4133726	R4166822	NR	-	-	R4577613[263]	R4577613
R44140344[167]	1 "	R4133725	R4133726	R4166822	NR	-	-	R4577612[262]	R4577612
R44141197	2-7/8 "	R42R55244	R42R55243	R4066781	R4090019S[199]	R4112008[54]	N/A	R4577248	R4577249
R44141197	2-7/8 "	R42R55244	R42R55243	R4066781	R4090019S[199]	R4112007[54]	N/A	R4577248	R4577249
R44141237[175]	2-3/16 "	R42R55412	R42R55411	R4166713	R4090029[41]	R4112008[54]	N/A	R4577311[259]	R4577311
R44141237[175]	2-3/16 "	R42R55412	R42R55411	R4166713	R4090029[41]	R4112007[54]	N/A	R4577311[259]	R4577311
R44141235[381]	2-3/16 "	R42R55412	R42R55411	R4166713	R4090029[41]	R4112007[54]	N/A	R4577235[259]	R4577235
R44140397[195]	15/16 "	R4133230	R4133231	R4166852	NR	-	-	R4577245[261]	R4577245
R44140397[195]	1 "	R4133004	R4133004	R4166822	NR	-	-	R4577245[261]	R4577245
R44140397[195]	1 "	R4133004	R4133004	R4166822	NR	-	-	R4577612[262]	R4577612
R44140397[195]	15/16 "	R4133230	R4133231	R4166852	NR	-	-	R4577612[262]	R4577612
R44140397[195]	1 "	R4133004	R4133004	R4166822	NR	-	-	R4577613[263]	R4577613
R44140397[195]	15/16 "	R4133230	R4133231	R4166852	NR	-	-	R4577613[263]	R4577613
R44140504[189]	1 "	R4133725	R4133726	R4166822	NR	-	-	R4577613[263]	R4577613
R44140344[167]	1 "	R4133725	R4133726	R4166822	NR	-	-	R4577245[261]	R4577245
R44140344[167]	1 "	R4133725	R4133726	R4166822	NR	-	-	R4577613[263]	R4577613
R44140344[167]	1 "	R4133725	R4133726	R4166822	NR	-	-	R4577612[262]	R4577612

259 - 4x2, Except Monobeam Axle
261 - 4x4, Except Monobeam Axle
262 - 4x2 and 4x4 Monobeam Axle and 133", 153", 168" Wheel Base
263 - 4x2 and 4x4 Monobeam Axle with 137" and 161" Wheel Base
381 - Rotor and Hub One Piece Assembly W/O ABS Ring

MAKE MODEL YEAR AXLE CODE AXLE WEIGHT	AXLE & BRK. TYPE	BRK. MFG.	BRAKE SIZE	FMSI	MERITOR DISC PAD OR BRAKE SHOE	MERITOR GUIDE PIN OR RETURN SPRING KIT	MERITOR CALIPER HWD. KIT OR RETURN SPRING KIT	MERITOR ADJUSTER KIT (LEFT WHEEL)	MERITOR ADJUSTER KIT (RIGHT WHEEL)
FORD(Cont.)									
F200, F250 SERIES PICKUP-3/4 TON(Cont.)									
1985									
	Ra	BX	12 " x 3 "	2140AT - 358	R46358	R40H608	R40H7181	R40H2598	R40H2599
	Ra	BX	12 " x 3 "	2140AT - 358	R46358	R40H608	R40H7181	R40H2598	R40H2599
8,500 lb. GVW and Up	Fd	DN		7054 - D120	MD120	R40H05025	60050135	NR	NR
1984									
	Fd	BX		788 - D50	MD50	R40H05025	R40H5545	NR	NR
	Fd	BX		788 - D50	MD50	R40H05025	R40H5545	NR	NR
	Fd	DN		7054 - D120	MD120	R40H05025	60050135	NR	NR
	Fd	DN		7054 - D120	MD120	R40H05025	60050135	NR	NR
	Fd	DN		7054 - D120	MD120	R40H05025	60050135	NR	NR
	Ra	BX	12 " x 2-1/2 "	2146AT - 357	R46357	R40H546	R40H7146	R40H2598	R40H2599
	Ra	BX	12 " x 2-1/2 "	2146AT - 357	R46357	R40H546	R40H7146	R40H2598	R40H2599
	Ra	BX	12 " x 2-1/2 "	2146AT - 357	R46357	R40H546	R40H7146	R40H2598	R40H2599
	Ra	BX	12 " x 2-1/2 "	2146AT - 357	R46357	R40H546	R40H7146	R40H2598	R40H2599
	Ra	BX	12 " x 2-1/2 "	2146AT - 357	R46357	R40H546	R40H7146	R40H2598	R40H2599
	Ra	BX	12 " x 2-1/2 "	2146AT - 357	R46357	R40H546	R40H7146	R40H2598	R40H2599
	Ra	BX	12 " x 3 "	2140AT - 358	R46358	R40H608	R40H7181	R40H2598	R40H2599
	Ra	BX	12 " x 3 "	2140AT - 358	R46358	R40H608	R40H7181	R40H2598	R40H2599
	Ra	BX	12 " x 3 "	2140AT - 358	R46358	R40H608	R40H7181	R40H2598	R40H2599
	Ra	BX	12 " x 3 "	2140AT - 358	R46358	R40H608	R40H7181	R40H2598	R40H2599
	Ra	BX	12 " x 3 "	2140AT - 358	R46358	R40H608	R40H7181	R40H2598	R40H2599
	Ra	BX	12 " x 3 "	2140AT - 358	R46358	R40H608	R40H7181	R40H2598	R40H2599
8,500 lb. GVW and Up	Fd	DN		7054 - D120	MD120	R40H05025	60050135	NR	NR
1983									
	Fd	BX		788 - D50	MD50	R40H05025	R40H5545	NR	NR
	Fd	DN		7054 - D120	MD120	R40H05025	60050135	NR	NR
	Fd	DN		7054 - D120	MD120	R40H05025	60050135	NR	NR
	Ra	BX	12 " x 2-1/2 "	2146AT - 357	R46357	R40H546	R40H7146	R40H2598	R40H2599
	Ra	BX	12 " x 2-1/2 "	2146AT - 357	R46357	R40H546	R40H7146	R40H2598	R40H2599
	Ra	BX	12 " x 2-1/2 "	2146AT - 357	R46357	R40H546	R40H7146	R40H2598	R40H2599
	Ra	BX	12 " x 2-1/2 "	2146AT - 357	R46357	R40H546	R40H7146	R40H2598	R40H2599
1982									
	Fd	BX		788 - D50	MD50	R40H05025	R40H5545	NR	NR
	Fd	DN		7054 - D120	MD120	R40H05025	60050135	NR	NR
	Fd	DN		7054 - D120	MD120	R40H05025	60050135	NR	NR
	Ra	BX	12 " x 2-1/2 "	2146AT - 357	R46357	R40H546	R40H7146	R40H2598	R40H2599
	Ra	BX	12 " x 2-1/2 "	2146AT - 357	R46357	R40H546	R40H7146	R40H2598	R40H2599
	Ra	BX	12 " x 2-1/2 "	2146AT - 357	R46357	R40H546	R40H7146	R40H2598	R40H2599
	Ra	BX	12 " x 2-1/2 "	2146AT - 357	R46357	R40H546	R40H7146	R40H2598	R40H2599
1981									
	Fd	BX		788 - D50	MD50	R40H05025	R40H5545	NR	NR
	Fd	DN		7054 - D120	MD120	R40H05025	60050135	NR	NR
	Fd	DN		7054 - D120	MD120	R40H05025	60050135	NR	NR
	Ra	BX	12 " x 2-1/2 "	2146AT - 357	R46357	R40H546	R40H7146	R40H2598	R40H2599
	Ra	BX	12 " x 2-1/2 "	2146AT - 357	R46357	R40H546	R40H7146	R40H2598	R40H2599
	Ra	BX	12 " x 2-1/2 "	2146AT - 357	R46357	R40H546	R40H7146	R40H2598	R40H2599
	Ra	BX	12 " x 2-1/2 "	2146AT - 357	R46357	R40H546	R40H7146	R40H2598	R40H2599
1980									
	Fd	BX		788 - D50	MD50	R40H05025	R40H5545	NR	NR
	Fd	DN		7054 - D120	MD120	R40H05025	60050135	NR	NR
	Fd	DN		7054 - D120	MD120	R40H05025	60050135	NR	NR
	Ra	BX	12 " x 2-1/2 "	2146AT - 357	R46357	R40H546	R40H7146	R40H2598	R40H2599
	Ra	BX	12 " x 2-1/2 "	2146AT - 357	R46357	R40H546	R40H7146	R40H2598	R40H2599
	Ra	BX	12 " x 2-1/2 "	2146AT - 357	R46357	R40H546	R40H7146	R40H2598	R40H2599
	Ra	BX	12 " x 2-1/2 "	2146AT - 357	R46357	R40H546	R40H7146	R40H2598	R40H2599
1979									
	Fd	BX		788 - D50	MD50	R40H05025	R40H5545	NR	NR
	Fd	DN		7054 - D120	MD120	R40H05025	60050135	NR	NR
	Ra	BX	12 " x 2-1/2 "	2146AT - 357	R46357	R40H546	R40H7146	R40H2598	R40H2599
	Ra	BX	12 " x 2-1/2 "	2146AT - 357	R46357	R40H546	R40H7146	R40H2598	R40H2599
1978									
	Fd	BX		788 - D50	MD50	R40H05025	R40H5545	NR	NR
	Fd	DN		7054 - D120	MD120	R40H05025	60050135	NR	NR
	Ra	BX	12 " x 2-1/2 "	2146AT - 357	R46357	R40H546	R40H7146	R40H2598	R40H2599
	Ra	BX	12 " x 2-1/2 "	2146AT - 357	R46357	R40H546	R40H7146	R40H2598	R40H2599

41 - Aluminum piston
167 - Except 10 1/4" Ring Gear
195 - 7.50", 9.75" Ring Gear

53 - Power Brakes
175 - Rotor Only; 3.54, 4.09 Ratio
199 - For Steel Version use R4090019S

54 - Manual Brakes
189 - Single Rear Wheels, 10 1/4" Ring Gear
259 - 4x2, Except Monobeam Axle

MERITOR DRUM OR ROTOR NO.	CALIPER OR CYLINDER BORE SIZE	MERITOR CALIPER OR WHEEL CYLINDER (LEFT)	MERITOR CALIPER OR WHEEL CYLINDER (RIGHT)	MERITOR CALIPER OR WHEEL CYLINDER REPAIR KIT	MERITOR CALIPER PISTON	MERITOR MASTER CYLINDER	MERITOR MASTER CYLINDER KIT	MERITOR BRAKE HOSE (LEFT)	MERITOR BRAKE HOSE (RIGHT)
									FORD(Cont.)
									F200, F250 SERIES PICKUP-3/4 TON(Cont.)
R44140504[189]	1 "	R4133725	R4133726	R4166822	NR	-	-	R4577612[262]	R4577612
R44140504[189]	1 "	R4133725	R4133726	R4166822	NR	-	-	R4577245[261]	R4577245
R44141234[381]	2-3/16 "	R42R55412	R42R55411	R4166713	R4090029[41]	R4112008[54]	N/A	R4577235[259]	R4577235
R44141197	2-7/8 "	R42R55244	R42R55243	R4066781	R4090019S[199]	R4112007[54]	N/A	R4577248	R4577249
R44141197	2-7/8 "	R42R55244	R42R55243	R4066781	R4090019S[199]	R4112008[54]	N/A	R4577248	R4577249
R44141235[381]	2-3/16 "	R42R55412	R42R55411	R4166713	R4090029[41]	R4112007[54]	N/A	R4577235[259]	R4577235
R44141237[175]	2-3/16 "	R42R55412	R42R55411	R4166713	R4090029[41]	R4112008[54]	N/A	R4577311[259]	R4577311
R44141237[175]	2-3/16 "	R42R55412	R42R55411	R4166713	R4090029[41]	R4112007[54]	N/A	R4577311[259]	R4577311
R44140397[195]	1 "	R4133004	R4133004	R4166822	NR	-	-	R4577245	R4577245
R44140397[195]	15/16 "	R4133230	R4133231	R4166852	NR	-	-	R4577245	R4577245
R44140397[195]	15/16 "	R4133230	R4133231	R4166852	NR	-	-	R4577245	R4577245
R44140397[195]	1 "	R4133004	R4133004	R4166822	NR	-	-	R4577245	R4577245
R44140397[195]	15/16 "	R4133230	R4133231	R4166852	NR	-	-	R4577245	R4577245
R44140397[195]	1 "	R4133004	R4133004	R4166822	NR	-	-	R4577245	R4577245
R44140504[189]	1 "	R4133725	R4133726	R4166822	NR	-	-	R4577245	R4577245
R44140344[167]	1 "	R4133725	R4133726	R4166822	NR	-	-	R4577245	R4577245
R44140344[167]	1 "	R4133725	R4133726	R4166822	NR	-	-	R4577245	R4577245
R44140504[189]	1 "	R4133725	R4133726	R4166822	NR	-	-	R4577245	R4577245
R44140344[167]	1 "	R4133725	R4133726	R4166822	NR	-	-	R4577245	R4577245
R44140504[189]	1 "	R4133725	R4133726	R4166822	NR	-	-	R4577245	R4577245
R44141234[381]	2-3/16 "	R42R55412	R42R55411	R4166713	R4090029[41]	R4112008[54]	N/A	R4577235[259]	R4577235
R44141197	2-7/8 "	R42R55244	R42R55243	R4066781	R4090019S[199]	R4111854[53]	N/A	R4577248	R4577249
R44141237[175]	2-3/16 "	R42R55412	R42R55411	R4166713	R4090029[41]	R4111856[54]	N/A	R4577311[259]	R4577311
R44141235[381]	2-3/16 "	R42R55412	R42R55411	R4166713	R4090029[41]	R4111861[54]	N/A	R4577235[259]	R4577235
R44140397[195]	15/16 "	R4133230	R4133231	R4166852	NR	-	-	R4577245[261]	R4577245
R44140397[195]	15/16 "	R4133230	R4133231	R4166852	NR	-	-	R4577247[261]	R4577247
R44140397[195]	15/16 "	R4133230	R4133231	R4166852	NR	-	-	R4577613[263]	R4577613
R44140397[195]	15/16 "	R4133230	R4133231	R4166852	NR	-	-	R4577612[262]	R4577612
R44141197	2-7/8 "	R42R55244	R42R55243	R4066781	R4090019S[199]	R4111854[53]	N/A	R4577248	R4577249
R44141237[175]	2-3/16 "	R42R55412	R42R55411	R4166713	R4090029[41]	R4111856[54]	N/A	R4577311[259]	R4577311
R44141235[381]	2-3/16 "	R42R55412	R42R55411	R4166713	R4090029[41]	R4111861[54]	N/A	R4577235[259]	R4577235
R44140397[195]	15/16 "	R4133230	R4133231	R4166852	NR	-	-	R4577245	R4577245
R44140397[195]	15/16 "	R4133230	R4133231	R4166852	NR	-	-	R4577245	R4577245
R44140397[195]	15/16 "	R4133230	R4133231	R4166852	NR	-	-	R4577245	R4577245
R44140397[195]	15/16 "	R4133230	R4133231	R4166852	NR	-	-	R4577245	R4577245
R44141197	2-7/8 "	R42R55244	R42R55243	R4066781	R4090019S[199]	R4111854[53]	N/A	R4577248	R4577249
R44141237[175]	2-3/16 "	R42R55412	R42R55411	R4166713	R4090029[41]	R4111856[54]	N/A	R4577311[259]	R4577311
R44141235[381]	2-3/16 "	R42R55412	R42R55411	R4166713	R4090029[41]	R4111861[54]	N/A	R4577235[259]	R4577235
R44140397[195]	15/16 "	R4133230	R4133231	R4166852	NR	-	-	R4577245	R4577245
R44140397[195]	15/16 "	R4133230	R4133231	R4166852	NR	-	-	R4577245	R4577245
R44140397[195]	15/16 "	R4133230	R4133231	R4166852	NR	-	-	R4577245	R4577245
R44140397[195]	15/16 "	R4133230	R4133231	R4166852	NR	-	-	R4577245	R4577245
R44141197	2-7/8 "	R42R55244	R42R55243	R4066781	R4090019S[199]	R4111854[53]	N/A	R4577248	R4577249
R44141237[175]	2-3/16 "	R42R55412	R42R55411	R4166713	R4090029[41]	R4111856[54]	N/A	R4577311[259]	R4577311
R44141235[381]	2-3/16 "	R42R55412	R42R55411	R4166713	R4090029[41]	R4111861[54]	N/A	R4577235[259]	R4577235
R44140397[195]	15/16 "	R4133230	R4133231	R4166852	NR	-	-	R4577245	R4577245
R44140397[195]	15/16 "	R4133230	R4133231	R4166852	NR	-	-	R4577245	R4577245
R44140397[195]	15/16 "	R4133230	R4133231	R4166852	NR	-	-	R4577245	R4577245
R44140397[195]	15/16 "	R4133230	R4133231	R4166852	NR	-	-	R4577245	R4577245
N/A	2-7/8 "	R42R55095	R42R55094	R4066781	R4090019S[199]	R4111854[53]	N/A	R4577248	R4577249
N/A	2-3/16 "	R42R55413	R42R55413	R4166713	R4090029[41]	-	-	-	-
N/A	15/16 "	-	-	N/A	NR	-	-	-	-
N/A	1 "	-	-	N/A	NR	-	-	-	-
N/A	2-7/8 "	R42R55095	R42R55094	R4066781	R4090019S[199]	R4111854[53]	N/A	R4577248	R4577249
N/A	2-3/16 "	R42R55413	R42R55413	R4166713	R4090029[41]	-	-	-	-
N/A	1 "	-	-	N/A	NR	-	-	-	-
N/A	15/16 "	-	-	N/A	NR	-	-	-	-

261 - 4x4, Except Monobeam Axle
262 - 4x2 and 4x4 Monobeam Axle and 133", 153", 168" Wheel Base
263 - 4x2 and 4x4 Monobeam Axle with 137" and 161" Wheel Base
381 - Rotor and Hub One Piece Assembly W/O ABS Ring

MAKE MODEL YEAR AXLE CODE AXLE WEIGHT	AXLE & BRK. TYPE	BRK. MFG.	BRAKE SIZE	FMSI	MERITOR DISC PAD OR BRAKE SHOE	MERITOR GUIDE PIN OR RETURN SPRING KIT	MERITOR CALIPER HWD. KIT OR RETURN SPRING KIT	MERITOR ADJUSTER KIT (LEFT WHEEL)	MERITOR ADJUSTER KIT (RIGHT WHEEL)
FORD(Cont.)									
F200, F250 SERIES PICKUP-3/4 TON(Cont.)									
1977									
	Fd	BX		788 - D50	MD50	R40H05025	R40H5545	NR	NR
	Fd	DN		7054 - D120	MD120	R40H05025	60050135	NR	NR
	Ra	BX	12 " x 2-1/2 "	2146AT - 357	R46357	R40H546	R40H7146	R40H2598	R40H2599
	Ra	BX	12 " x 2-1/2 "	2146AT - 357	R46357	R40H546	R40H7146	R40H2598	R40H2599
1976									
	Fd	BX		788 - D50	MD50	R40H05025	R40H5545	NR	NR
	Fd	DN		7054 - D120	MD120	R40H05025	60050135	NR	NR
	Ra	BX	12 " x 2-1/2 "	2146AT - 357	R46357	R40H546	R40H7146	R40H2598	R40H2599
	Ra	BX	12.125 x 2 "	2075A - 33	N/A	R40H130	NR	NR	NR
1975									
	Fd	BX		788 - D50	MD50	R40H05025	R40H5545	NR	NR
	Fd	DN		771 - D20	-	NR	NR	NR	NR
	Ra	BX	12 " x 2-1/2 "	2146AT - 316	R46357	R40H546	R40H7146	R40H2598	R40H2599
	Ra	BX	12 " x 2-1/2 "	2146AT - 316	R46357	R40H546	R40H7146	R40H2598	R40H2599
	Ra	BX	12.125 x 2 "	2075A - 33	N/A	R40H130	NR	NR	NR
1974									
	Fd	BX		788 - D50	MD50	R40H05025	R40H5545	NR	NR
	Fd	DN		771 - D20	-	NR	NR	NR	NR
	Ra	BX	12 " x 2-1/2 "	2146AT - 316	R46357	R40H546	R40H7146	R40H2598	R40H2599
	Ra	BX	12 " x 2-1/2 "	2146AT - 316	R46357	R40H546	R40H7146	R40H2598	R40H2599
	Ra	BX	12.125 x 2 "	2075A - 33	N/A	R40H130	NR	NR	NR
1973									
	Fd	BX		788 - D50	MD50	R40H05025	R40H5545	NR	NR
	Fd	DN		771 - D20	-	NR	NR	NR	NR
	Ra	BX	12 " x 2-1/2 "	2146AT - 316	R46357	R40H546	R40H7146	R40H2598	R40H2599
	Ra	BX	12 " x 2-1/2 "	2146AT - 316	R46357	R40H546	R40H7146	R40H2598	R40H2599
	Ra	BX	12.125 x 2 "	2075A - 33	N/A	R40H130	NR	NR	NR
F250 SUPERDUTY SERIES PICKUP-3/4TON									
2008									
2 x 4	Rd	TRW		7973 - D1068	MD1068	N/R	R4012247	N/R	N/R
	Rd	TRW		7973 - D1068	MD1068	N/R	R4012247	N/R	N/R
2X4 Diesel Engine	Fd	TRW		7974 - D1069	MD1069	N/R	R4012081	N/R	N/R
	Fd	TRW		7974 - D1069	MD1069	N/R	R4012081	N/R	N/R
2X4 Gas Engine	Fd	TRW		7974 - D1069	MD1069	N/R	R4012081	N/R	N/R
	Fd	TRW		7974 - D1069	MD1069	N/R	R4012081	N/R	N/R
4 X 4	Fd	TRW		7974 - D1069	MD1069	N/R	R4012081	N/R	N/R
	Fd	TRW		7974 - D1069	MD1069	N/R	R4012081	N/R	N/R
	Fd	TRW		7974 - D1069	MD1069	N/R	R4012081	N/R	N/R
	Fd	TRW		7974 - D1069	MD1069	N/R	R4012081	N/R	N/R
	Rd	TRW		7973 - D1068	MD1068	N/R	R4012247	N/R	N/R
	Rd	TRW		7973 - D1068	MD1068	N/R	R4012247	N/R	N/R
2007									
2 x 4	Fd	TRW		7974 - D1069	MD1069	N/R	R4012081	N/R	N/R
	Fd	TRW		7974 - D1069	MD1069	N/R	R4012081	N/R	N/R
	Fd	TRW		7974 - D1069	MD1069	N/R	R4012081	N/R	N/R
	Fd	TRW		7974 - D1069	MD1069	N/R	R4012081	N/R	N/R
	Fd	TRW		7974 - D1069	MD1069	N/R	R4012081	N/R	N/R
	Fd	TRW		7974 - D1069	MD1069	N/R	R4012081	N/R	N/R
	Rd	TRW		7973 - D1068	MD1068	N/R	R4012247	N/R	N/R
	Rd	TRW		7973 - D1068	MD1068	N/R	R4012247	N/R	N/R
4 x 4	Rd	TRW		7973 - D1068	MD1068	N/R	R4012247	N/R	N/R
	Rd	TRW		7973 - D1068	MD1068	N/R	R4012247	N/R	N/R
4 X 4 Except Harley Davidson Package	Fd	TRW		7974 - D1069	MD1069	N/R	R4012081	N/R	N/R
	Fd	TRW		7974 - D1069	MD1069	N/R	R4012081	N/R	N/R
	Fd	TRW		7974 - D1069	MD1069	N/R	R4012081	N/R	N/R
	Fd	TRW		7974 - D1069	MD1069	N/R	R4012081	N/R	N/R
	Fd	TRW		7974 - D1069	MD1069	N/R	R4012081	N/R	N/R
	Fd	TRW		7974 - D1069	MD1069	N/R	R4012081	N/R	N/R
4 X 4 Harley Davidson Package	Fd	TRW		7974 - D1069	MD1069	N/R	R4012081	N/R	N/R
	Fd	TRW		7974 - D1069	MD1069	N/R	R4012081	N/R	N/R
	Fd	TRW		7974 - D1069	MD1069	N/R	R4012081	N/R	N/R

41 - Aluminum piston

54 - Manual Brakes

199 - For Steel Version use R4090019S

363 - Piston includes Boots and Seals

394 - 8 Stud Rotor and Hub one piece Assembly

401 - Gas Engine w/o Brake Control Valve

402 - Gas Engine With Integrated Brake Control Valve

403 - To 7/19/05 Diesel Engine w/o Speed Control

404 - To 7/19/05 Diesel Engine with Speed Control

MERITOR DRUM OR ROTOR NO.	CALIPER OR CYLINDER BORE SIZE	MERITOR CALIPER OR WHEEL CYLINDER (LEFT)	MERITOR CALIPER OR WHEEL CYLINDER (RIGHT)	MERITOR CALIPER OR WHEEL CYLINDER REPAIR KIT	MERITOR CALIPER PISTON	MERITOR MASTER CYLINDER	MERITOR MASTER CYLINDER KIT	MERITOR BRAKE HOSE (LEFT)	MERITOR BRAKE HOSE (RIGHT)
FORD(Cont.)									
F200, F250 SERIES PICKUP-3/4 TON(Cont.)									
-	2-7/8 "	R42R55095	R42R55094	R4066781	R44140388[199]	R4111854[54]	N/A	-	-
-	2-3/16 "	R42R55413	R42R55413	R4166713	R4090029[41]	-	-	-	-
-	1 "	-	-	-	NR	-	-	-	-
-	15/16 "	-	-	-	NR	-	-	-	-
-	2-7/8 "	R42R55095	R42R55094	R4066781	R44140388[199]	-	-	-	-
-	2-3/16 "	R42R55413	R42R55413	R4166713	R4090029[41]	-	-	-	-
-		-	-	-	NR	-	-	-	-
-		-	-	-	NR	-	-	-	-
-	2-7/8 "	R42R55095	R42R55094	R4066781	R44140388[199]	-	-	-	-
-	2-3/16 "	R42R55456	R42R55456	-	R4090029	-	-	-	-
-		-	-	-	NR	-	-	-	-
-		-	-	-	NR	-	-	-	-
-		-	-	-	NR	-	-	-	-
-	2-7/8 "	R42R55095	R42R55094	R4066781	R44140388[199]	-	-	-	-
-	2-3/16 "	R42R55456	R42R55456	-	R4090029	-	-	-	-
-		-	-	-	NR	-	-	-	-
-		-	-	-	NR	-	-	-	-
-		-	-	-	NR	-	-	-	-
-	2-7/8 "	R42R55095	R42R55094	R4066781	R44140388[199]	-	-	-	-
-	2-3/16 "	R42R55456	R42R55456	-	R4090029	-	-	-	-
-		-	-	-	NR	-	-	-	-
-		-	-	-	NR	-	-	-	-
-		-	-	-	NR	-	-	-	-
F250 SUPERDUTY SERIES PICKUP-3/4TON									
R44145258[405]	48mm	R4212244	R4212243	R4012246	R4012245[363]	-	-	R457013827	R457013836
R44145258[405]	48mm	R4212244	R4212243	R4012246	R4012245[363]	-	-	R457013826	-
R441713831	60mm	R4212084	R4212083	R4012080	-	R413013835[408]	-	R457013837	R457013838
R441713831	60mm	R4212084	R4212083	R4012080	-	R413013834[407]	-	R457013837	R457013838
R441713831	60mm	R4212084	R4212083	R4012080	-	R413013833[402]	-	R457013837	R457013838
R441713831	60mm	R4212084	R4212083	R4012080	-	R413013832[401]	-	R457013837	R457013838
R441713839	60mm	R4212084	R4212083	R4012080	-	R413013834[407]	-	R457013844	R457013845
R441713839	60mm	R4212084	R4212083	R4012080	-	R413013833[402]	-	R457013844	R457013845
R441713839	60mm	R4212084	R4212083	R4012080	-	R413013832[401]	-	R457013844	R457013845
R441713839	60mm	R4212084	R4212083	R4012080	-	R413013835[408]	-	R457013844	R457013845
R44145258[405]	48mm	-	-	-	-	-	-	R457013827	R457013843
R44145258[405]	48mm	-	-	-	-	-	-	R457013842	-
R44145255[394]	60mm	R4212084	R4212083	R4012080	-	R413013819[405]	-	R457013824	R457013825
R44145255[394]	60mm	R4212084	R4212083	R4012080	-	R413013820[406]	-	R457013824	R457013825
R44145255[394]	60mm	R4212084	R4212083	R4012080	-	R413013817[401]	-	R457013824	R457013825
R44145255[394]	60mm	R4212084	R4212083	R4012080	-	R413013818[402]	-	R457013824	R457013825
R44145255[394]	60mm	R4212084	R4212083	R4012080	-	R413013829[403]	-	R457013824	R457013825
R44145255[394]	60mm	R4212084	R4212083	R4012080	-	R413013830[404]	-	R457013824	R457013825
R44145258[405]	48mm	R4212244	R4212243	R4012246	R4012245[363]	-	-	R457013826	-
R44145258[405]	48mm	R4212244	R4212243	R4012246	R4012245[363]	-	-	R457013827	R457013828
R44145258[405]	48mm	R4212244	R4212243	R4012246	R4012245[363]	-	-	R457013842	-
R44145258[405]	48mm	R4212244	R4212243	R4012246	R4012245[363]	-	-	R457013827	R457013828
R441713839	60mm	R4212084	R4212083	R4012080	-	R413013819[405]	-	R457013840	R457013841
R441713839	60mm	R4212084	R4212083	R4012080	-	R413013820[406]	-	R457013840	R457013841
R441713839	60mm	R4212084	R4212083	R4012080	-	R413013818[402]	-	R457013840	R457013841
R441713839	60mm	R4212084	R4212083	R4012080	-	R413013829[403]	-	R457013840	R457013841
R441713839	60mm	R4212084	R4212083	R4012080	-	R413013830[404]	-	R457013840	R457013841
R441713839	60mm	R4212084	R4212083	R4012080	-	R413013817[401]	-	R457013840	R457013841
R441713813	60mm	R4212084	R4212083	R4012080	-	R413013819[405]	-	R457013840	R457013841
R441713813	60mm	R4212084	R4212083	R4012080	-	R413013829[403]	-	R457013840	R457013841
R441713813	60mm	R4212084	R4212083	R4012080	-	R413013818[402]	-	R457013840	R457013841

405 - From 7/19/05 Diesel Engine w/o Brake Control Valve

405 - Rotor Only

406 - From 7/19/05 Diesel Engine with Integrated Brake Control Valve

407 - Diesel Engine w/o Brake Control Valve

408 - Diesel Engine with Integrated Brake Control Valve

MAKE MODEL YEAR AXLE CODE AXLE WEIGHT	AXLE & BRK. TYPE	BRK. MFG.	BRAKE SIZE	FMSI	MERITOR DISC PAD OR BRAKE SHOE	MERITOR GUIDE PIN OR RETURN SPRING KIT	MERITOR CALIPER HWD. KIT OR RETURN SPRING KIT	MERITOR ADJUSTER KIT (LEFT WHEEL)	MERITOR ADJUSTER KIT (RIGHT WHEEL)
FORD(Cont.)									
F250 SUPERDUTY SERIES PICKUP-3/4TON (Cont.)									
2007									
	Fd	TRW		7974 - D1069	MD1069	N/R	R4012081	N/R	N/R
	Fd	TRW		7974 - D1069	MD1069	N/R	R4012081	N/R	N/R
	Fd	TRW		7974 - D1069	MD1069	N/R	R4012081	N/R	N/R
2006									
2 x 4	Fd	TRW		7974 - D1069	MD1069	N/R	R4012081	N/R	N/R
	Fd	TRW		7974 - D1069	MD1069	N/R	R4012081	N/R	N/R
	Fd	TRW		7974 - D1069	MD1069	N/R	R4012081	N/R	N/R
	Fd	TRW		7974 - D1069	MD1069	N/R	R4012081	N/R	N/R
	Fd	TRW		7974 - D1069	MD1069	N/R	R4012081	N/R	N/R
	Fd	TRW		7974 - D1069	MD1069	N/R	R4012081	N/R	N/R
	Rd	TRW		7973 - D1068	MD1068	N/R	R4012247	N/R	N/R
	Rd	TRW		7973 - D1068	MD1068	N/R	R4012247	N/R	N/R
4 x 4	Rd	TRW		7973 - D1068	MD1068	N/R	R4012247	N/R	N/R
	Rd	TRW		7973 - D1068	MD1068	N/R	R4012247	N/R	N/R
4 X 4 Except Harley Davidson Package	Fd	TRW		7974 - D1069	MD1069	N/R	R4012081	N/R	N/R
	Fd	TRW		7974 - D1069	MD1069	N/R	R4012081	N/R	N/R
	Fd	TRW		7974 - D1069	MD1069	N/R	R4012081	N/R	N/R
	Fd	TRW		7974 - D1069	MD1069	N/R	R4012081	N/R	N/R
	Fd	TRW		7974 - D1069	MD1069	N/R	R4012081	N/R	N/R
	Fd	TRW		7974 - D1069	MD1069	N/R	R4012081	N/R	N/R
4 X 4 Harley Davidson Package	Fd	TRW		7974 - D1069	MD1069	N/R	R4012081	N/R	N/R
	Fd	TRW		7974 - D1069	MD1069	N/R	R4012081	N/R	N/R
	Fd	TRW		7974 - D1069	MD1069	N/R	R4012081	N/R	N/R
	Fd	TRW		7974 - D1069	MD1069	N/R	R4012081	N/R	N/R
	Fd	TRW		7974 - D1069	MD1069	N/R	R4012081	N/R	N/R
	Fd	TRW		7974 - D1069	MD1069	N/R	R4012081	N/R	N/R
2005									
2 x 4	Fd	TRW		7974 - D1069	MD1069	N/R	R4012081	N/R	N/R
	Fd	TRW		7974 - D1069	MD1069	N/R	R4012081	N/R	N/R
	Fd	TRW		7974 - D1069	MD1069	N/R	R4012081	N/R	N/R
	Fd	TRW		7974 - D1069	MD1069	N/R	R4012081	N/R	N/R
	Fd	TRW		7974 - D1069	MD1069	N/R	R4012081	N/R	N/R
	Fd	TRW		7974 - D1069	MD1069	N/R	R4012081	N/R	N/R
	Rd	TRW		7973 - D1068	MD1068	N/R	R4012247	N/R	N/R
	Rd	TRW		7973 - D1068	MD1068	N/R	R4012247	N/R	N/R
4 x 4	Rd	TRW		7973 - D1068	MD1068	N/R	R4012247	N/R	N/R
	Rd	TRW		7973 - D1068	MD1068	N/R	R4012247	N/R	N/R
4 X 4 Except Harley Davidson Package	Fd	TRW		7974 - D1069	MD1069	N/R	R4012081	N/R	N/R
	Fd	TRW		7974 - D1069	MD1069	N/R	R4012081	N/R	N/R
	Fd	TRW		7974 - D1069	MD1069	N/R	R4012081	N/R	N/R
	Fd	TRW		7974 - D1069	MD1069	N/R	R4012081	N/R	N/R
	Fd	TRW		7974 - D1069	MD1069	N/R	R4012081	N/R	N/R
	Fd	TRW		7974 - D1069	MD1069	N/R	R4012081	N/R	N/R
4 X 4 Harley Davidson Package	Fd	TRW		7974 - D1069	MD1069	N/R	R4012081	N/R	N/R
	Fd	TRW		7974 - D1069	MD1069	N/R	R4012081	N/R	N/R
	Fd	TRW		7974 - D1069	MD1069	N/R	R4012081	N/R	N/R
	Fd	TRW		7974 - D1069	MD1069	N/R	R4012081	N/R	N/R
	Fd	TRW		7974 - D1069	MD1069	N/R	R4012081	N/R	N/R
	Fd	TRW		7974 - D1069	MD1069	N/R	R4012081	N/R	N/R
2004									
2 x 4, 4 Wheel ABS, DRW Twin I-Beam	Fd	TRW		7625 - D824	MVD824	NR	NR	NR	NR
	Fd	TRW		7625 - D824	MVD824	NR	NR	NR	NR
2 x 4, 4 Wheel ABS, SRW	Fd	TRW		7625 - D824	MVD824	NR	NR	NR	NR
2 x 4, Rear Wheel ABS, SRW	Fd	TRW		7625 - D824	MVD824	NR	NR	NR	NR
	Fd	TRW		7625 - D824	MVD824	NR	NR	NR	NR
	Fd	TRW		7625 - D824	MVD824	NR	NR	NR	NR
4 x 4, From 3/22/99 Except Mono Beam Front Axle	Fd	TRW		7625 - D824	MVD824	NR	NR	NR	NR

217 - Power Brakes Except Speed Control
223 - Power Brakes, Speed Control
363 - Piston includes Boots and Seals
371 - With Manual Locking Hubs
394 - 8 Stud Rotor and Hub one piece Assembly
401 - Gas Engine w/o Brake Control Valve
402 - Gas Engine With Integrated Brake Control Valve
403 - To 7/19/05 Diesel Engine w/o Speed Control
404 - To 7/19/05 Diesel Engine with Speed Control

MERITOR DRUM OR ROTOR NO.	CALIPER OR CYLINDER BORE SIZE	MERITOR CALIPER OR WHEEL CYLINDER (LEFT)	MERITOR CALIPER OR WHEEL CYLINDER (RIGHT)	MERITOR CALIPER OR WHEEL CYLINDER REPAIR KIT	MERITOR CALIPER PISTON	MERITOR MASTER CYLINDER	MERITOR MASTER CYLINDER KIT	MERITOR BRAKE HOSE (LEFT)	MERITOR BRAKE HOSE (RIGHT)
									FORD(Cont.)
									F250 SUPERDUTY SERIES PICKUP-3/4TON (Cont.)
R441713813	60mm	R4212084	R4212083	R4012080	-	R413013830[404]	-	R457013840	R457013841
R441713813	60mm	R4212084	R4212083	R4012080	-	R413013820[406]	-	R457013840	R457013841
R441713813	60mm	R4212084	R4212083	R4012080	-	R413013817[401]	-	R457013840	R457013841
R44145255[394]	60mm	R4212084	R4212083	R4012080	-	R413013817[401]	-	R457013824	R457013825
R44145255[394]	60mm	R4212084	R4212083	R4012080	-	R413013820[406]	-	R457013824	R457013825
R44145255[394]	60mm	R4212084	R4212083	R4012080	-	R413013829[403]	-	R457013824	R457013825
R44145255[394]	60mm	R4212084	R4212083	R4012080	-	R413013818[402]	-	R457013824	R457013825
R44145255[394]	60mm	R4212084	R4212083	R4012080	-	R413013819[405]	-	R457013824	R457013825
R44145255[394]	60mm	R4212084	R4212083	R4012080	-	R413013830[404]	-	R457013824	R457013825
R44145258[405]	48mm	R4212244	R4212243	R4012246	R4012245[363]	-	-	R457013826	-
R44145258[405]	48mm	R4212244	R4212243	R4012246	R4012245[363]	-	-	R457013827	R457013828
R44145258[405]	48mm	R4212244	R4212243	R4012246	R4012245[363]	-	-	R457013842	-
R44145258[405]	48mm	R4212244	R4212243	R4012246	R4012245[363]	-	-	R457013827	R457013828
R441713839	60mm	R4212084	R4212083	R4012080	-	R413013818[402]	-	R457013840	R457013841
R441713839	60mm	R4212084	R4212083	R4012080	-	R413013829[403]	-	R457013840	R457013841
R441713839	60mm	R4212084	R4212083	R4012080	-	R413013817[401]	-	R457013840	R457013841
R441713839	60mm	R4212084	R4212083	R4012080	-	R413013830[404]	-	R457013840	R457013841
R441713839	60mm	R4212084	R4212083	R4012080	-	R413013819[405]	-	R457013840	R457013841
R441713839	60mm	R4212084	R4212083	R4012080	-	R413013820[406]	-	R457013840	R457013841
R441713813	60mm	R4212084	R4212083	R4012080	-	R413013817[401]	-	R457013840	R457013841
R441713813	60mm	R4212084	R4212083	R4012080	-	R413013818[402]	-	R457013840	R457013841
R441713813	60mm	R4212084	R4212083	R4012080	-	R413013830[404]	-	R457013840	R457013841
R441713813	60mm	R4212084	R4212083	R4012080	-	R413013820[406]	-	R457013840	R457013841
R441713813	60mm	R4212084	R4212083	R4012080	-	R413013819[405]	-	R457013840	R457013841
R441713813	60mm	R4212084	R4212083	R4012080	-	R413013829[403]	-	R457013840	R457013841
R44145255[394]	60mm	R4212084	R4212083	R4012080	-	R413013818[402]	-	R457013824	R457013825
R44145255[394]	60mm	R4212084	R4212083	R4012080	-	R413013830[404]	-	R457013824	R457013825
R44145255[394]	60mm	R4212084	R4212083	R4012080	-	R413013819[405]	-	R457013824	R457013825
R44145255[394]	60mm	R4212084	R4212083	R4012080	-	R413013829[403]	-	R457013824	R457013825
R44145255[394]	60mm	R4212084	R4212083	R4012080	-	R413013817[401]	-	R457013824	R457013825
R44145255[394]	60mm	R4212084	R4212083	R4012080	-	R413013820[406]	-	R457013824	R457013825
R44145258[405]	48mm	R4212244	R4212243	R4012246	R4012245[363]	-	-	R457013826	-
R44145258[405]	48mm	R4212244	R4212243	R4012246	R4012245[363]	-	-	R457013827	R457013828
R44145258[405]	48mm	R4212244	R4212243	R4012246	R4012245[363]	-	-	R457013842	-
R44145258[405]	48mm	R4212244	R4212243	R4012246	R4012245[363]	-	-	R457013827	R457013828
R441713839	60mm	R4212084	R4212083	R4012080	-	R413013817[401]	-	R457013840	R457013841
R441713839	60mm	R4212084	R4212083	R4012080	-	R413013818[402]	-	R457013840	R457013841
R441713839	60mm	R4212084	R4212083	R4012080	-	R413013820[406]	-	R457013840	R457013841
R441713839	60mm	R4212084	R4212083	R4012080	-	R413013819[405]	-	R457013840	R457013841
R441713839	60mm	R4212084	R4212083	R4012080	-	R413013830[404]	-	R457013840	R457013841
R441713839	60mm	R4212084	R4212083	R4012080	-	R413013829[403]	-	R457013840	R457013841
R441713813	60mm	R4212084	R4212083	R4012080	-	R413013830[404]	-	R457013840	R457013841
R441713813	60mm	R4212084	R4212083	R4012080	-	R413013819[405]	-	R457013840	R457013841
R441713813	60mm	R4212084	R4212083	R4012080	-	R413013820[406]	-	R457013840	R457013841
R441713813	60mm	R4212084	R4212083	R4012080	-	R413013817[401]	-	R457013840	R457013841
R441713813	60mm	R4212084	R4212083	R4012080	-	R413013818[402]	-	R457013840	R457013841
R441713813	60mm	R4212084	R4212083	R4012080	-	R413013829[403]	-	R457013840	R457013841
R44145267[394]	56mm	R4255749	R4255748	R4012261	R4012260[363]	R4113648[217]	-	R4578992	R4578991
R44145267[394]	56mm	R4255749	R4255748	R4012261	R4012260[363]	R4113649[223]	-	R4578992	R4578991
R44145255[394]	56mm	R4255749	R4255748	R4012261	R4012260[363]	R4113648[217]	-	R4578992	R4578991
R44145255[394]	56mm	R4255749	R4255748	R4012261	R4012260[363]	R4113649[223]	-	R4578876	R4578991
R44145256[394]	56mm	R4255749	R4255748	R4012261	R4012260[363]	R4113648[217]	-	R4578992	R4578991
R44145256[394]	56mm	R4255749	R4255748	R4012261	R4012260[363]	R4113649[223]	-	R4578992	R4578991
R44145274[405]	56mm	R4255749	R4255748	R4012261	R4012260[363]	R4113649[223]	-	R4578994[371]	R4578995

405 - From 7/19/05 Diesel Engine w/o Brake Control Valve

405 - Rotor Only

406 - From 7/19/05 Diesel Engine with Integrated Brake Control Valve

MAKE MODEL YEAR AXLE CODE AXLE WEIGHT	AXLE & BRK. TYPE	BRK. MFG.	BRAKE SIZE	FMSI	MERITOR DISC PAD OR BRAKE SHOE	MERITOR GUIDE PIN OR RETURN SPRING KIT	MERITOR CALIPER HWD. KIT OR RETURN SPRING KIT	MERITOR ADJUSTER KIT (LEFT WHEEL)	MERITOR ADJUSTER KIT (RIGHT WHEEL)
FORD(Cont.)									
F250 SUPERDUTY SERIES PICKUP-3/4TON (Cont.)									
2004									
	Fd	TRW		7625 - D824	MVD824	NR	NR	NR	NR
4 x 4, From 3/22/99									
Mono Beam Front Axle	Fd	TRW		7625 - D824	MVD824	NR	NR	NR	NR
	Fd	TRW		7625 - D824	MVD824	NR	NR	NR	NR
4 x 4, Up to 3/22/99									
Except Mono Beam Front									
Axle	Fd	TRW		7625 - D824	MVD824	NR	NR	NR	NR
	Fd	TRW		7625 - D824	MVD824	NR	NR	NR	NR
4 x 4, Up to 3/22/99									
Mono Beam Front Axle	Fd	TRW		7625 - D824	MVD824	NR	NR	NR	NR
	Fd	TRW		7625 - D824	MVD824	NR	NR	NR	NR
DRW	Rd	TRW		7626 - D757	MVD757	NR	NR	NR	NR
SRW	Rd	TRW		7626 - D757	MVD757	NR	NR	NR	NR
2003									
2 x 4, 4 Wheel ABS, DRW									
Twin I-Beam	Fd	TRW		7625 - D824	MVD824	NR	NR	NR	NR
	Fd	TRW		7625 - D824	MVD824	NR	NR	NR	NR
2 x 4, 4 Wheel ABS, SRW	Fd	TRW		7625 - D824	MVD824	NR	NR	NR	NR
2 x 4, Rear Wheel ABS,									
SRW	Fd	TRW		7625 - D824	MVD824	NR	NR	NR	NR
	Fd	TRW		7625 - D824	MVD824	NR	NR	NR	NR
	Fd	TRW		7625 - D824	MVD824	NR	NR	NR	NR
4 x 4, From 3/22/99									
Except Mono Beam Front									
Axle	Fd	TRW		7625 - D824	MVD824	NR	NR	NR	NR
	Fd	TRW		7625 - D824	MVD824	NR	NR	NR	NR
4 x 4, From 3/22/99									
Mono Beam Front Axle	Fd	TRW		7625 - D824	MVD824	NR	NR	NR	NR
	Fd	TRW		7625 - D824	MVD824	NR	NR	NR	NR
4 x 4, Up to 3/22/99									
Except Mono Beam Front									
Axle	Fd	TRW		7625 - D824	MVD824	NR	NR	NR	NR
	Fd	TRW		7625 - D824	MVD824	NR	NR	NR	NR
4 x 4, Up to 3/22/99									
Mono Beam Front Axle	Fd	TRW		7625 - D824	MVD824	NR	NR	NR	NR
	Fd	TRW		7625 - D824	MVD824	NR	NR	NR	NR
DRW	Rd	TRW		7626 - D757	MVD757	NR	NR	NR	NR
SRW	Rd	TRW		7626 - D757	MVD757	NR	NR	NR	NR
2002									
2 x 4, 4 Wheel ABS, DRW									
Twin I-Beam	Fd	TRW		7625 - D824	MVD824	NR	NR	NR	NR
	Fd	TRW		7625 - D824	MVD824	NR	NR	NR	NR
2 x 4, 4 Wheel ABS, SRW	Fd	TRW		7625 - D824	MVD824	NR	NR	NR	NR
2 x 4, Rear Wheel ABS,									
SRW	Fd	TRW		7625 - D824	MVD824	NR	NR	NR	NR
	Fd	TRW		7625 - D824	MVD824	NR	NR	NR	NR
	Fd	TRW		7625 - D824	MVD824	NR	NR	NR	NR
4 x 4, From 3/22/99									
Except Mono Beam Front									
Axle	Fd	TRW		7625 - D824	MVD824	NR	NR	NR	NR
	Fd	TRW		7625 - D824	MVD824	NR	NR	NR	NR
4 x 4, From 3/22/99									
Mono Beam Front Axle	Fd	TRW		7625 - D824	MVD824	NR	NR	NR	NR
	Fd	TRW		7625 - D824	MVD824	NR	NR	NR	NR
4 x 4, Up to 3/22/99									
Except Mono Beam Front									
Axle	Fd	TRW		7625 - D824	MVD824	NR	NR	NR	NR
	Fd	TRW		7625 - D824	MVD824	NR	NR	NR	NR
4 x 4, Up to 3/22/99									
Mono Beam Front Axle	Fd	TRW		7625 - D824	MVD824	NR	NR	NR	NR
	Fd	TRW		7625 - D824	MVD824	NR	NR	NR	NR
DRW	Rd	TRW		7626 - D757	MVD757	NR	NR	NR	NR
SRW	Rd	TRW		7626 - D757	MVD757	NR	NR	NR	NR

217 - Power Brakes Except Speed Control
223 - Power Brakes, Speed Control
363 - Piston includes Boots and Seals
371 - With Manual Locking Hubs
372 - With Auro Locking Hubs
373 - 2 x 4 with 4 wheel ABS
374 - 2 x 4 with Rear wheel ABS
375 - Right and Left interchangeable depending on clock mounting of unit
394 - 8 Stud Rotor and Hub one piece Assembly

MERITOR DRUM OR ROTOR NO.	CALIPER OR CYLINDER BORE SIZE	MERITOR CALIPER OR WHEEL CYLINDER (LEFT)	MERITOR CALIPER OR WHEEL CYLINDER (RIGHT)	MERITOR CALIPER OR WHEEL CYLINDER REPAIR KIT	MERITOR CALIPER PISTON	MERITOR MASTER CYLINDER	MERITOR MASTER CYLINDER KIT	MERITOR BRAKE HOSE (LEFT)	MERITOR BRAKE HOSE (RIGHT)
									FORD(Cont.)
									F250 SUPERDUTY SERIES PICKUP-3/4TON (Cont.)
R44145274[405]	56mm	R4255749	R4255748	R4012261	R4012260[363]	R4113648[217]	-	R4578997[372]	R4578996
R4466924	56mm	R4255749	R4255748	R4012261	R4012260[363]	R4113649[223]	-	R4578994[371]	R4578995
R4466924	56mm	R4255749	R4255748	R4012261	R4012260[363]	R4113648[217]	-	R4578997[372]	R4578996
R44145245[405]	56mm	R4255749	R4255748	R4012261	R4012260[363]	R4113648[217]	-	R4578994[372]	R4578996
R44145245[405]	56mm	R4255749	R4255748	R4012261	R4012260[363]	R4113649[223]	-	R4578993[371]	R4578995
R44145257[405]	56mm	R4255749	R4255748	R4012261	R4012260[363]	R4113648[217]	-	R4578802[373]	R4512482
R44145257[405]	56mm	R4255749	R4255748	R4012261	R4012260[363]	R4113649[223]	-	R4512481[374]	R4512482
R44145280[405]	45mm	R4255858	R4255857[375]	R4012040	R4012039[363]	-	-	-	-
R44145258[405]	45mm	R4255858	R4255857[375]	R4012040	R4012039[363]	-	-	-	-
R44145267[394]	56mm	R4255749	R4255748	R4012261	R4012260[363]	R4113648[217]	-	R4578992	R4578991
R44145267[394]	56mm	R4255749	R4255748	R4012261	R4012260[363]	R4113649[223]	-	R4578992	R4578991
R44145255[394]	56mm	R4255749	R4255748	R4012261	R4012260[363]	R4113648[217]	-	R4578992	R4578991
R44145256[394]	56mm	R4255749	R4255748	R4012261	R4012260[363]	R4113649[223]	-	R4578992	R4578991
R44145256[394]	56mm	R4255749	R4255748	R4012261	R4012260[363]	R4113648[217]	-	R4578992	R4578991
R44145255[394]	56mm	R4255749	R4255748	R4012261	R4012260[363]	R4113649[223]	-	R4578876	R4578991
R44145274[405]	56mm	R4255749	R4255748	R4012261	R4012260[363]	R4113649[223]	-	R4578994[371]	R4578995
R44145274[405]	56mm	R4255749	R4255748	R4012261	R4012260[363]	R4113648[217]	-	R4578997[372]	R4578996
R4466924	56mm	R4255749	R4255748	R4012261	R4012260[363]	R4113649[223]	-	R4578994[371]	R4578995
R4466924	56mm	R4255749	R4255748	R4012261	R4012260[363]	R4113648[217]	-	R4578997[372]	R4578996
R44145245[405]	56mm	R4255749	R4255748	R4012261	R4012260[363]	R4113649[223]	-	R4578993[371]	R4578995
R44145245[405]	56mm	R4255749	R4255748	R4012261	R4012260[363]	R4113648[217]	-	R4578994[372]	R4578996
R44145257[405]	56mm	R4255749	R4255748	R4012261	R4012260[363]	R4113649[223]	-	R4512481[374]	R4512482
R44145257[405]	56mm	R4255749	R4255748	R4012261	R4012260[363]	R4113648[217]	-	R4578802[373]	R4512482
R44145280[405]	45mm	R4255858	R4255857[375]	R4012040	R4012039[363]	-	-	-	-
R44145258[405]	45mm	R4255858	R4255857[375]	R4012040	R4012039[363]	-	-	-	-
R44145267[394]	56mm	R4255749	R4255748	R4012261	R4012260[363]	R4113648[217]	-	R4578992	R4578991
R44145267[394]	56mm	R4255749	R4255748	R4012261	R4012260[363]	R4113649[223]	-	R4578992	R4578991
R44145255[394]	56mm	R4255749	R4255748	R4012261	R4012260[363]	R4113648[217]	-	R4578992	R4578991
R44145256[394]	56mm	R4255749	R4255748	R4012261	R4012260[363]	R4113649[223]	-	R4578992	R4578991
R44145255[394]	56mm	R4255749	R4255748	R4012261	R4012260[363]	R4113649[223]	-	R4578876	R4578991
R44145256[394]	56mm	R4255749	R4255748	R4012261	R4012260[363]	R4113648[217]	-	R4578992	R4578991
R44145274[405]	56mm	R4255749	R4255748	R4012261	R4012260[363]	R4113648[217]	-	R4578997[372]	R4578996
R44145274[405]	56mm	R4255749	R4255748	R4012261	R4012260[363]	R4113649[223]	-	R4578994[371]	R4578995
R4466924	56mm	R4255749	R4255748	R4012261	R4012260[363]	R4113649[223]	-	R4578994[371]	R4578995
R4466924	56mm	R4255749	R4255748	R4012261	R4012260[363]	R4113648[217]	-	R4578997[372]	R4578996
R44145245[405]	56mm	R4255749	R4255748	R4012261	R4012260[363]	R4113649[223]	-	R4578993[371]	R4578995
R44145245[405]	56mm	R4255749	R4255748	R4012261	R4012260[363]	R4113648[217]	-	R4578994[372]	R4578996
R44145257[405]	56mm	R4255749	R4255748	R4012261	R4012260[363]	R4113648[217]	-	R4578802[373]	R4512482
R44145257[405]	56mm	R4255749	R4255748	R4012261	R4012260[363]	R4113649[223]	-	R4512481[374]	R4512482
R44145280[405]	45mm	R4255858	R4255857[375]	R4012040	R4012039[363]	-	-	-	-
R44145258[405]	45mm	R4255858	R4255857[375]	R4012040	R4012039[363]	-	-	-	-

405 - Rotor Only

MAKE MODEL YEAR AXLE CODE AXLE WEIGHT	AXLE & BRK. TYPE	BRK. MFG.	BRAKE SIZE	FMSI	MERITOR DISC PAD OR BRAKE SHOE	MERITOR GUIDE PIN OR RETURN SPRING KIT	MERITOR CALIPER HWD. KIT OR RETURN SPRING KIT	MERITOR ADJUSTER KIT (LEFT WHEEL)	MERITOR ADJUSTER KIT (RIGHT WHEEL)
FORD(Cont.)									
F250 SUPERDUTY SERIES PICKUP-3/4TON (Cont.)									
2001									
2 x 4, 4 Wheel ABS, DRW									
Twin I-Beam	Fd	TRW		7625 - D824	MVD824	NR	NR	NR	NR
	Fd	TRW		7625 - D824	MVD824	NR	NR	NR	NR
2 x 4, 4 Wheel ABS, SRW	Fd	TRW		7625 - D824	MVD824	NR	NR	NR	NR
2 x 4, Rear Wheel ABS,									
SRW	Fd	TRW		7625 - D824	MVD824	NR	NR	NR	NR
	Fd	TRW		7625 - D824	MVD824	NR	NR	NR	NR
	Fd	TRW		7625 - D824	MVD824	NR	NR	NR	NR
4 x 4, From 3/22/99									
Except Mono Beam Front									
Axle	Fd	TRW		7625 - D824	MVD824	NR	NR	NR	NR
	Fd	TRW		7625 - D824	MVD824	NR	NR	NR	NR
4 x 4, From 3/22/99									
Mono Beam Front Axle	Fd	TRW		7625 - D824	MVD824	NR	NR	NR	NR
	Fd	TRW		7625 - D824	MVD824	NR	NR	NR	NR
4 x 4, Up to 3/22/99									
Except Mono Beam Front									
Axle	Fd	TRW		7625 - D824	MVD824	NR	NR	NR	NR
	Fd	TRW		7625 - D824	MVD824	NR	NR	NR	NR
4 x 4, Up to 3/22/99									
Mono Beam Front Axle	Fd	TRW		7625 - D824	MVD824	NR	NR	NR	NR
	Fd	TRW		7625 - D824	MVD824	NR	NR	NR	NR
DRW	Rd	TRW		7626 - D757	MVD757	NR	NR	NR	NR
SRW	Rd	TRW		7626 - D757	MVD757	NR	NR	NR	NR
2000									
2 x 4, 4 Wheel ABS, DRW									
Twin I-Beam	Fd	TRW		7625 - D824	MVD824	NR	NR	NR	NR
	Fd	TRW		7625 - D824	MVD824	NR	NR	NR	NR
2 x 4, 4 Wheel ABS, SRW	Fd	TRW		7625 - D824	MVD824	NR	NR	NR	NR
2 x 4, Rear Wheel ABS,									
SRW	Fd	TRW		7625 - D824	MVD824	NR	NR	NR	NR
	Fd	TRW		7625 - D824	MVD824	NR	NR	NR	NR
	Fd	TRW		7625 - D824	MVD824	NR	NR	NR	NR
4 x 4, From 3/22/99									
Except Mono Beam Front									
Axle	Fd	TRW		7625 - D824	MVD824	NR	NR	NR	NR
	Fd	TRW		7625 - D824	MVD824	NR	NR	NR	NR
4 x 4, From 3/22/99									
Mono Beam Front Axle	Fd	TRW		7625 - D824	MVD824	NR	NR	NR	NR
	Fd	TRW		7625 - D824	MVD824	NR	NR	NR	NR
4 x 4, Up to 3/22/99									
Except Mono Beam Front									
Axle	Fd	TRW		7625 - D824	MVD824	NR	NR	NR	NR
	Fd	TRW		7625 - D824	MVD824	NR	NR	NR	NR
4 x 4, Up to 3/22/99									
Mono Beam Front Axle	Fd	TRW		7625 - D824	MVD824	NR	NR	NR	NR
	Fd	TRW		7625 - D824	MVD824	NR	NR	NR	NR
DRW	Rd	TRW		7626 - D757	MVD757	NR	NR	NR	NR
SRW	Rd	TRW		7626 - D757	MVD757	NR	NR	NR	NR
1999									
2 x 4, 4 Wheel ABS, DRW									
Twin I-Beam	Fd	TRW		7625 - D824	MVD824	NR	NR	NR	NR
	Fd	TRW		7625 - D824	MVD824	NR	NR	NR	NR
2 x 4, 4 Wheel ABS, SRW	Fd	TRW		7625 - D824	MVD824	NR	NR	NR	NR
2 x 4, Rear Wheel ABS,									
SRW	Fd	TRW		7625 - D824	MVD824	NR	NR	NR	NR
	Fd	TRW		7625 - D824	MVD824	NR	NR	NR	NR
	Fd	TRW		7625 - D824	MVD824	NR	NR	NR	NR
4 x 4, From 3/22/99									
Except Mono Beam Front									
Axle	Fd	TRW		7625 - D824	MVD824	NR	NR	NR	NR
	Fd	TRW		7625 - D824	MVD824	NR	NR	NR	NR
4 x 4, From 3/22/99									
Mono Beam Front Axle	Fd	TRW		7625 - D824	MVD824	NR	NR	NR	NR

217 - Power Brakes Except Speed Control
223 - Power Brakes, Speed Control
363 - Piston includes Boots and Seals
371 - With Manual Locking Hubs
372 - With Auro Locking Hubs
373 - 2 x 4 with 4 wheel ABS
374 - 2 x 4 with Rear wheel ABS
375 - Right and Left interchangeable depending on clock mounting of unit
394 - 8 Stud Rotor and Hub one piece Assembly

MERITOR DRUM OR ROTOR NO.	CALIPER OR CYLINDER BORE SIZE	MERITOR CALIPER OR WHEEL CYLINDER (LEFT)	MERITOR CALIPER OR WHEEL CYLINDER (RIGHT)	MERITOR CALIPER OR WHEEL CYLINDER REPAIR KIT	MERITOR CALIPER PISTON	MERITOR MASTER CYLINDER	MERITOR MASTER CYLINDER KIT	MERITOR BRAKE HOSE (LEFT)	MERITOR BRAKE HOSE (RIGHT)
									FORD(Cont.)
									F250 SUPERDUTY SERIES PICKUP-3/4TON (Cont.)
R44145267[394]	56mm	R4255749	R4255748	R4012261	R4012260[363]	R4113648[217]	-	R4578992	R4578991
R44145267[394]	56mm	R4255749	R4255748	R4012261	R4012260[363]	R4113649[223]	-	R4578992	R4578991
R44145255[394]	56mm	R4255749	R4255748	R4012261	R4012260[363]	R4113648[217]	-	R4578992	R4578991
R44145256[394]	56mm	R4255749	R4255748	R4012261	R4012260[363]	R4113649[223]	-	R4578992	R4578991
R44145256[394]	56mm	R4255749	R4255748	R4012261	R4012260[363]	R4113648[217]	-	R4578992	R4578991
R44145255[394]	56mm	R4255749	R4255748	R4012261	R4012260[363]	R4113649[223]	-	R4578876	R4578991
R44145274[405]	56mm	R4255749	R4255748	R4012261	R4012260[363]	R4113649[223]	-	R4578994[371]	R4578995
R44145274[405]	56mm	R4255749	R4255748	R4012261	R4012260[363]	R4113648[217]	-	R4578997[372]	R4578996
R4466924	56mm	R4255749	R4255748	R4012261	R4012260[363]	R4113648[217]	-	R4578997[372]	R4578996
R4466924	56mm	R4255749	R4255748	R4012261	R4012260[363]	R4113649[223]	-	R4578994[371]	R4578995
R44145245[405]	56mm	R4255749	R4255748	R4012261	R4012260[363]	R4113648[217]	-	R4578994[372]	R4578996
R44145245[405]	56mm	R4255749	R4255748	R4012261	R4012260[363]	R4113649[223]	-	R4578993[371]	R4578995
R44145257[405]	56mm	R4255749	R4255748	R4012261	R4012260[363]	R4113648[217]	-	R4578802[373]	R4512482
R44145257[405]	56mm	R4255749	R4255748	R4012261	R4012260[363]	R4113649[223]	-	R4512481[374]	R4512482
R44145280[405]	45mm	R4255858	R4255857[375]	R4012040	R4012039[363]	-	-	-	-
R44145258[405]	45mm	R4255858	R4255857[375]	R4012040	R4012039[363]	-	-	-	-
R44145267[394]	56mm	R4255749	R4255748	R4012261	R4012260[363]	R4113649[223]	-	R4578992	R4578991
R44145267[394]	56mm	R4255749	R4255748	R4012261	R4012260[363]	R4113648[217]	-	R4578992	R4578991
R44145255[394]	56mm	R4255749	R4255748	R4012261	R4012260[363]	R4113648[217]	-	R4578992	R4578991
R44145255[394]	56mm	R4255749	R4255748	R4012261	R4012260[363]	R4113649[223]	-	R4578876	R4578991
R44145256[394]	56mm	R4255749	R4255748	R4012261	R4012260[363]	R4113649[223]	-	R4578992	R4578991
R44145256[394]	56mm	R4255749	R4255748	R4012261	R4012260[363]	R4113648[217]	-	R4578992	R4578991
R44145274[405]	56mm	R4255749	R4255748	R4012261	R4012260[363]	R4113649[223]	-	R4578994[371]	R4578995
R44145274[405]	56mm	R4255749	R4255748	R4012261	R4012260[363]	R4113648[217]	-	R4578997[372]	R4578996
R4466924	56mm	R4255749	R4255748	R4012261	R4012260[363]	R4113649[223]	-	R4578994[371]	R4578995
R4466924	56mm	R4255749	R4255748	R4012261	R4012260[363]	R4113648[217]	-	R4578997[372]	R4578996
R44145245[405]	56mm	R4255749	R4255748	R4012261	R4012260[363]	R4113648[217]	-	R4578994[372]	R4578996
R44145245[405]	56mm	R4255749	R4255748	R4012261	R4012260[363]	R4113649[223]	-	R4578993[371]	R4578995
R44145257[405]	56mm	R4255749	R4255748	R4012261	R4012260[363]	R4113649[223]	-	R4512481[374]	R4512482
R44145257[405]	56mm	R4255749	R4255748	R4012261	R4012260[363]	R4113648[217]	-	R4578802[373]	R4512482
R44145280[405]	45mm	R4255858	R4255857[375]	R4012040	R4012039[363]	-	-	-	-
R44145258[405]	45mm	R4255858	R4255857[375]	R4012040	R4012039[363]	-	-	-	-
R44145267[394]	56mm	R4255749	R4255748	R4012261	R4012260[363]	R4113649[223]	-	R4578992	R4578991
R44145267[394]	56mm	R4255749	R4255748	R4012261	R4012260[363]	R4113648[217]	-	R4578992	R4578991
R44145255[394]	56mm	R4255749	R4255748	R4012261	R4012260[363]	R4113648[217]	-	R4578992	R4578991
R44145256[394]	56mm	R4255749	R4255748	R4012261	R4012260[363]	R4113649[223]	-	R4578992	R4578991
R44145256[394]	56mm	R4255749	R4255748	R4012261	R4012260[363]	R4113648[217]	-	R4578992	R4578991
R44145255[394]	56mm	R4255749	R4255748	R4012261	R4012260[363]	R4113649[223]	-	R4578876	R4578991
R44145274[405]	56mm	R4255749	R4255748	R4012261	R4012260[363]	R4113649[223]	-	R4578994[371]	R4578995
R44145274[405]	56mm	R4255749	R4255748	R4012261	R4012260[363]	R4113648[217]	-	R4578997[372]	R4578996
R4466924	56mm	R4255749	R4255748	R4012261	R4012260[363]	R4113649[223]	-	R4578994[371]	R4578995

405 - Rotor Only

MAKE MODEL YEAR AXLE CODE AXLE WEIGHT	AXLE & BRK. TYPE	BRK. MFG.	BRAKE SIZE	FMSI	MERITOR DISC PAD OR BRAKE SHOE	MERITOR GUIDE PIN OR RETURN SPRING KIT	MERITOR CALIPER HWD. KIT OR RETURN SPRING KIT	MERITOR ADJUSTER KIT (LEFT WHEEL)	MERITOR ADJUSTER KIT (RIGHT WHEEL)
FORD(Cont.)									
F250 SUPERDUTY SERIES PICKUP-3/4TON									
1999 4 x 4, From 3/22/99 Mono Beam Front Axle	Fd	TRW		7625 - D824	MVD824	NR	NR	NR	NR
4 x 4, Up to 3/22/99 Except Mono Beam Front Axle	Fd Fd	TRW TRW		7625 - D824 7625 - D824	MVD824 MVD824	NR NR	NR NR	NR NR	NR NR
4 x 4, Up to 3/22/99 Mono Beam Front Axle	Fd Fd	TRW TRW		7625 - D824 7625 - D824	MVD824 MVD824	NR NR	NR NR	NR NR	NR NR
DRW	Rd	TRW		7626 - D757	MVD757	NR	NR	NR	NR
SRW	Rd	TRW		7626 - D757	MVD757	NR	NR	NR	NR
F300, F350 SERIES PICKUP-1TON									
2001 4x2 DRW	Fd	TRW		7535 - D655	MD655	NR	R4012262	NR	NR
	Ra	BX	12 " x 3 "	2140AT - 358	R46358	R40H608	R40H4087	R40H2598	R40H2599
4x2 SRW	Fd	TRW		7535 - D655	MD655	NR	R4012262	NR	NR
	Ra	BX	12 " x 3 "	2140AT - 358	R46358	R40H608	R40H4087	R40H2598	R40H2599
4x4 DRW	Fd	TRW		7535 - D655	MD655	NR	R4012262	NR	NR
	Ra	BX	12 " x 3 "	2140AT - 358	R46358	R40H608	R40H4087	R40H2598	R40H2599
4x4 SRW	Fd	TRW		7535 - D655	MD655	NR	R4012262	NR	NR
	Ra	BX	12 " x 3 "	2140AT - 358	R46358	R40H608	R40H4087	R40H2598	R40H2599
2000 4x2 DRW	Fd	TRW		7535 - D655	MD655	NR	R4012262	NR	NR
	Ra	BX	12 " x 3 "	2140AT - 358	R46358	R40H608	R40H4087	R40H2598	R40H2599
4x2 SRW	Fd	TRW		7535 - D655	MD655	NR	R4012262	NR	NR
	Ra	BX	12 " x 3 "	2140AT - 358	R46358	R40H608	R40H4087	R40H2598	R40H2599
4x4 DRW	Fd	TRW		7535 - D655	MD655	NR	R4012262	NR	NR
	Ra	BX	12 " x 3 "	2140AT - 358	R46358	R40H608	R40H4087	R40H2598	R40H2599
4x4 SRW	Fd	TRW		7535 - D655	MD655	NR	R4012262	NR	NR
	Ra	BX	12 " x 3 "	2140AT - 358	R46358	R40H608	R40H4087	R40H2598	R40H2599
1999 4x2 DRW	Fd	TRW		7535 - D655	MD655	NR	R4012262	NR	NR
	Ra	BX	12 " x 3 "	2140AT - 358	R46358	R40H608	R40H4087	R40H2598	R40H2599
4x2 SRW	Fd	TRW		7535 - D655	MD655	NR	R4012262	NR	NR
	Ra	BX	12 " x 3 "	2140AT - 358	R46358	R40H608	R40H4087	R40H2598	R40H2599
4x4 DRW	Fd	TRW		7535 - D655	MD655	NR	R4012262	NR	NR
	Ra	BX	12 " x 3 "	2140AT - 358	R46358	R40H608	R40H4087	R40H2598	R40H2599
4x4 SRW	Fd	TRW		7535 - D655	MD655	NR	R4012262	NR	NR
	Ra	BX	12 " x 3 "	2140AT - 358	R46358	R40H608	R40H4087	R40H2598	R40H2599
Super Duty	Fd			7625 - D756	MD756	NR	NR	NR	NR
	Rd			7626 - D757	MD757	NR	NR	NR	NR
1998	Fd			7625 - D756	MD756	N/A	N/A	NR	NR
	Rd			7626 - D757	MD757	N/A	N/A	NR	NR
4x2 DRW	Fd	TRW		7535 - D655	MD655	NR	R4012262	NR	NR
	Ra	BX	12 " x 3 "	2140AT - 358	R46358	R40H608	R40H4087	R40H2598	R40H2599
4x2 SRW	Fd	TRW		7535 - D655	MD655	NR	R4012262	NR	NR
	Ra	BX	12 " x 3 "	2140AT - 358	R46358	R40H608	R40H4087	R40H2598	R40H2599
4x4 DRW	Fd	TRW		7535 - D655	MD655	NR	R4012262	NR	NR
	Ra	BX	12 " x 3 "	2140AT - 358	R46358	R40H608	R40H4087	R40H2598	R40H2599
4x4 SRW	Fd	TRW		7535 - D655	MD655	NR	R4012262	NR	NR
	Ra	BX	12 " x 3 "	2140AT - 358	R46358	R40H608	R40H4087	R40H2598	R40H2599
Super Duty	Fd			7625 - D756	MD756	NR	NR	NR	NR
	Rd			7626 - D757	MD757	NR	NR	NR	NR
1997	Fd			7535 - D655	MD655	R40H5735	R40H5864	NR	NR
	Fd			7535 - D655	MD655	R40H5735	R40H5864	NR	NR
	Fd			7535 - D655	MD655	R40H5735	R40H5864	NR	NR
	Fd			7535 - D655	MD655	R40H5735	R40H5864	NR	NR
	Fd			7535 - D655	MD655	R40H5735	R40H5864	NR	NR
	Fd			7535 - D655	MD655	R40H5735	R40H5864	NR	NR
	Fd			7535 - D655	MD655	R40H5735	R40H5864	NR	NR

155 - 4x2 With Dual Rear Wheels
189 - Single Rear Wheels, 10 1/4" Ring Gear
213 - Manual Brakes, Speed Control
217 - Power Brakes Except Speed Control
223 - Power Brakes, Speed Control
234 - 4x2, Manual Brakes, Except Speed Control

238 - Manual Brakes, 7.3 liter Diesel Engine Except Speed Control
239 - Manual Brakes, 7.3 liter Diesel Engine with Speed Control
363 - Piston includes Boots and Seals

MERITOR DRUM OR ROTOR NO.	CALIPER OR CYLINDER BORE SIZE	MERITOR CALIPER OR WHEEL CYLINDER (LEFT)	MERITOR CALIPER OR WHEEL CYLINDER (RIGHT)	MERITOR CALIPER OR WHEEL CYLINDER REPAIR KIT	MERITOR CALIPER PISTON	MERITOR MASTER CYLINDER	MERITOR MASTER CYLINDER KIT	MERITOR BRAKE HOSE (LEFT)	MERITOR BRAKE HOSE (RIGHT)
									FORD(Cont.)
									F250 SUPERDUTY SERIES PICKUP-3/4TON
R4466924	56mm	R4255749	R4255748	R4012261	R4012260[363]	R4113648[217]	-	R4578997[372]	R4578996
R44145245[405]	56mm	R4255749	R4255748	R4012261	R4012260[363]	R4113648[217]	-	R4578994[372]	R4578996
R44145245[405]	56mm	R4255749	R4255748	R4012261	R4012260[363]	R4113649[223]	-	R4578993[371]	R4578995
R44145257[405]	56mm	R4255749	R4255748	R4012261	R4012260[363]	R4113648[217]	-	R4578802[373]	R4512482
R44145257[405]	56mm	R4255749	R4255748	R4012261	R4012260[363]	R4113649[223]	-	R4512481[374]	R4512482
R44145280[405]	45mm	R4255858	R4255857[375]	R4012040	R4012039[363]	-	-	-	-
R44145258[405]	45mm	R4255858	R4255857[375]	R4012040	R4012039[363]	-	-	-	-
									F300, F350 SERIES PICKUP-1TON
R44145054	56mm	R4255749	R4255748	R4012261	R4012260[363]	R4113355[234]	N/A	R4578325	R4578324
R44140504[189]	1-1/8 "	R4133206	R4133207	R418187	NR	-	-	R4578184	-
R44145049[381]	56mm	R4255749	R4255748	R4012261	R4012260[363]	R4113355[234]	N/A	R4578325	R4578324
R44140504[189]	1-1/8 "	R4134139	R4134140	N/A	NR	-	-	R4578184	-
R44145279	56mm	R4255749	R4255748	R4012261	R4012260[363]	R4113355[234]	N/A	R4578325	R4578324
R44140504[189]	1-1/8 "	R4133206	R4133207	R418187	NR	-	-	R4578184	-
R44145055[405]	56mm	R4255749	R4255748	R4012261	R4012260[363]	R4113355[234]	N/A	R4578325	R4578324
R44140504[189]	1-1/8 "	R4134139	R4134140	N/A	NR	-	-	R4578184	-
R44145054	56mm	R4255749	R4255748	R4012261	R4012260[363]	R4113355[234]	N/A	R4578325	R4578324
R44140504[189]	1-1/8 "	R4133206	R4133207	R418187	NR	-	-	R4578184	-
R44145049[381]	56mm	R4255749	R4255748	R4012261	R4012260[363]	R4113355[234]	N/A	R4578325	R4578324
R44140504[189]	1-1/8 "	R4134139	R4134140	N/A	NR	-	-	R4578184	-
R44145279	56mm	R4255749	R4255748	R4012261	R4012260[363]	R4113355[234]	N/A	R4578325	R4578324
R44140504[189]	1-1/8 "	R4133206	R4133207	R418187	NR	-	-	R4578184	-
R44145055[405]	56mm	R4255749	R4255748	R4012261	R4012260[363]	R4113355[234]	N/A	R4578325	R4578324
R44140504[189]	1-1/8 "	R4134139	R4134140	N/A	NR	-	-	R4578184	-
R44145054	56mm	R4255749	R4255748	R4012261	R4012260[363]	R4113355[234]	N/A	R4578325	R4578324
R44140504[189]	1-1/8 "	R4133206	R4133207	R418187	NR	-	-	R4578184	-
R44145049[381]	56mm	R4255749	R4255748	R4012261	R4012260[363]	R4113355[234]	N/A	R4578325	R4578324
R44140504[189]	1-1/8 "	R4134139	R4134140	N/A	NR	-	-	R4578184	-
R44145279	56mm	R4255749	R4255748	R4012261	R4012260[363]	R4113355[234]	N/A	R4578325	R4578324
R44140504[189]	1-1/8 "	R4133206	R4133207	R418187	NR	-	-	R4578184	-
R44145055[405]	56mm	R4255749	R4255748	R4012261	R4012260[363]	R4113355[234]	N/A	R4578325	R4578324
R44140504[189]	1-1/8 "	R4134139	R4134140	N/A	NR	-	-	R4578184	-
-		-	-	-	-	-	-	-	-
-		-	-	-	-	-	-	-	-
N/A		N/A	N/A	N/A	N/A	-	-	-	-
N/A		-	-	N/A	NR	-	-	-	-
R44145054	56mm	R4255749	R4255748	R4012261	R4012260[363]	R4113355[234]	N/A	R4578325	R4578324
R44140504[189]	1-1/8 "	R4133206	R4133207	R418187	NR	-	-	R4578184	-
R44145049[381]	56mm	R4255749	R4255748	R4012261	R4012260[363]	R4113355[234]	N/A	R4578325	R4578324
R44140504[189]	1-1/8 "	R4134139	R4134140	N/A	NR	-	-	R4578184	-
R44145279	56mm	R4255749	R4255748	R4012261	R4012260[363]	R4113355[234]	N/A	R4578325	R4578324
R44140504[189]	1-1/8 "	R4133206	R4133207	R418187	NR	-	-	R4578184	-
R44145055[405]	56mm	R4255749	R4255748	R4012261	R4012260[363]	R4113355[234]	N/A	R4578325	R4578324
R44140504[189]	1-1/8 "	R4134139	R4134140	N/A	NR	-	-	R4578184	-
-	60mm	R42R55605	R42R55604	R4066204	R4090088S	-	-	-	-
-	60mm	R42R55605	R42R55604	R4066204	R4090088S	-	-	-	-
R44145049[381]	2-11/32 "	R42R55749	R42R55748	R4011237	R44141808	R4110384[238]	N/A	R4578325	R4578324
R44145054[155]	2-11/32 "	R42R55749	R42R55748	R4011237	R44141808	R4110384[238]	N/A	R4578325	R4578324
R44145054[155]	2-11/32 "	R42R55749	R42R55748	R4011237	R44141808	R4110382[213]	N/A	R4578325	R4578324
R44145054[155]	2-11/32 "	R42R55749	R42R55748	R4011237	R44141808	R4113355[234]	N/A	R4578325	R4578324
R44145049[381]	2-11/32 "	R42R55749	R42R55748	R4011237	R44141808	R4113355[234]	N/A	R4578325	R4578324
R44145049[381]	2-11/32 "	R42R55749	R42R55748	R4011237	R44141808	R4110382[213]	N/A	R4578325	R4578324
R44145054[155]	2-11/32 "	R42R55749	R42R55748	R4011237	R44141808	R4113263[239]	N/A	R4578325	R4578324

371 - With Manual Locking Hubs
372 - With Auro Locking Hubs
373 - 2 x 4 with 4 wheel ABS
374 - 2 x 4 with Rear wheel ABS
375 - Right and Left interchangeable depending on clock mounting of unit
381 - Rotor and Hub One Piece Assembly W/O ABS Ring

405 - Rotor Only

MAKE MODEL YEAR AXLE CODE AXLE WEIGHT	AXLE & BRK. TYPE	BRK. MFG.	BRAKE SIZE	FMSI	MERITOR DISC PAD OR BRAKE SHOE	MERITOR GUIDE PIN OR RETURN SPRING KIT	MERITOR CALIPER HWD. KIT OR RETURN SPRING KIT	MERITOR ADJUSTER KIT (LEFT WHEEL)	MERITOR ADJUSTER KIT (RIGHT WHEEL)
FORD(Cont.)									
F300, F350 SERIES PICKUP-1TON(Cont.)									
1997									
	Fd			7535 - D655	MD655	R40H5735	R40H5864	NR	NR
	Fd			7535 - D655	MD655	R40H5735	R40H5864	NR	NR
	Fd			7535 - D655	MD655	R40H5735	R40H5864	NR	NR
	Ra	BX	12 " x 3 "	2140AT - 358	R46358	R40H608	R40H4087	R40H2598	R40H2599
	Ra	BX	12 " x 3 "	2140AT - 358	R46358	R40H608	R40H4087	R40H2598	R40H2599
	Ra	BX	12.125 x 3-1/2 "	2171T - 583	R468140	R40H608	R40H7299	R40H2598	R40H2599
	Ra	BX	12.125 x 3-1/2 "	2171T - 583	R468140	R40H608	R40H7299	R40H2598	R40H2599
1996									
	Fd			7535 - D655	MD655	R40H5735	R40H5864	NR	NR
	Fd			7535 - D655	MD655	R40H5735	R40H5864	NR	NR
	Fd			7535 - D655	MD655	R40H5735	R40H5864	NR	NR
	Fd			7535 - D655	MD655	R40H5735	R40H5864	NR	NR
	Fd			7535 - D655	MD655	R40H5735	R40H5864	NR	NR
	Fd			7535 - D655	MD655	R40H5735	R40H5864	NR	NR
	Fd			7535 - D655	MD655	R40H5735	R40H5864	NR	NR
	Fd			7535 - D655	MD655	R40H5735	R40H5864	NR	NR
	Fd			7535 - D655	MD655	R40H5735	R40H5864	NR	NR
	Ra	BX	12 " x 3 "	2140AT - 358	R46358	R40H608	R40H4087	R40H2598	R40H2599
	Ra	BX	12 " x 3 "	2140AT - 358	R46358	R40H608	R40H4087	R40H2598	R40H2599
	Ra	BX	12.125 x 3-1/2 "	2171T - 583	R468140	R40H608	R40H7299	R40H2598	R40H2599
	Ra	BX	12.125 x 3-1/2 "	2171T - 583	R468140	R40H608	R40H7299	R40H2598	R40H2599
1995									
	Fd			7535 - D655	MD655	R40H5735	R40H5864	NR	NR
	Fd			7535 - D655	MD655	R40H5735	R40H5864	NR	NR
	Fd			7535 - D655	MD655	R40H5735	R40H5864	NR	NR
	Fd			7535 - D655	MD655	R40H5735	R40H5864	NR	NR
	Fd			7535 - D655	MD655	R40H5735	R40H5864	NR	NR
	Fd			7535 - D655	MD655	R40H5735	R40H5864	NR	NR
	Fd			7535 - D655	MD655	R40H5735	R40H5864	NR	NR
	Fd			7535 - D655	MD655	R40H5735	R40H5864	NR	NR
	Fd			7535 - D655	MD655	R40H5735	R40H5864	NR	NR
	Ra	BX	12 " x 3 "	2140AT - 358	R46358	R40H608	R40H4087	R40H2598	R40H2599
	Ra	BX	12 " x 3 "	2140AT - 358	R46358	R40H608	R40H4087	R40H2598	R40H2599
	Ra	BX	12.125 x 3-1/2 "	2171T - 583	R468140	R40H608	R40H7299	R40H2598	R40H2599
	Ra	BX	12.125 x 3-1/2 "	2171T - 583	R468140	R40H608	R40H7299	R40H2598	R40H2599
1994									
	Fd	DN		7330 - D450	MD450	R407130	60050135	NR	NR
	Fd	DN		7330 - D450	MD450	R407130	60050135	NR	NR
	Fd	DN		7330 - D450	MD450	R407130	60050135	NR	NR
	Fd	DN		7330 - D450	MD450	R407130	60050135	NR	NR
	Ra	BX	12 " x 3 "	2140AT - 358	R46358	R40H608	R40H4087	R40H2598	R40H2599
	Ra	BX	12.125 x 3-1/2 "	2171T - 583	R468140	R40H608	R40H7299	R40H2598	R40H2599
1993									
	Fd	DN		7330 - D450	MD450	R407130	60050135	NR	NR
	Fd	DN		7330 - D450	MD450	R407130	60050135	NR	NR
	Fd	DN		7330 - D450	MD450	R407130	60050135	NR	NR
	Fd	DN		7330 - D450	MD450	R407130	60050135	NR	NR
	Ra	BX	12 " x 3 "	2140AT - 358	R46358	R40H608	R40H4087	R40H2598	R40H2599
	Ra	BX	12.125 x 3-1/2 "	2171T - 583	R468140	R40H608	R40H7299	R40H2598	R40H2599
1992									
	Fd	DN		7330 - D450	MD450	R407130	60050135	NR	NR
	Fd	DN		7330 - D450	MD450	R407130	60050135	NR	NR
	Fd	DN		7330 - D450	MD450	R407130	60050135	NR	NR
	Fd	DN		7330 - D450	MD450	R407130	60050135	NR	NR
	Ra	BX	12 " x 3 "	2140AT - 358	R46358	R40H608	R40H4087	R40H2598	R40H2599
	Ra	BX	12 " x 3 "	2140AT - 358	R46358	R40H608	R40H4087	R40H2598	R40H2599
	Ra	BX	12.125 x 3-1/2 "	2171T - 583	R468140	R40H608	R40H7299	R40H2598	R40H2599
	Ra	BX	12.125 x 3-1/2 "	2171T - 583	R468140	R40H608	R40H7299	R40H2598	R40H2599
4x2	Fd			7330 - D450	MD450	R407130	60050135	NR	NR
	Fd			7330 - D450	MD450	R407130	60050135	NR	NR
4x4	Fd			7330 - D450	MD450	R407130	60050135	NR	NR
	Fd			7330 - D450	MD450	R407130	60050135	NR	NR
1991 After 3/91	Fd	DN		7330 - D450	MD450	R407130	60050135	NR	NR

54 - Manual Brakes
148 - With 10 1/2" Ring Gear
155 - 4x2 With Dual Rear Wheels
156 - 4x2 With Single Rear Wheels
175 - Rotor Only; 3.54, 4.09 Ratio
181 - Rotor Only, Machine Rotor After Re-hub
189 - Single Rear Wheels, 10 1/4" Ring Gear
213 - Manual Brakes, Speed Control
234 - 4x2, Manual Brakes, Except Speed Control

MERITOR DRUM OR ROTOR NO.	CALIPER OR CYLINDER BORE SIZE	MERITOR CALIPER OR WHEEL CYLINDER (LEFT)	MERITOR CALIPER OR WHEEL CYLINDER (RIGHT)	MERITOR CALIPER OR WHEEL CYLINDER REPAIR KIT	MERITOR CALIPER PISTON	MERITOR MASTER CYLINDER	MERITOR MASTER CYLINDER KIT	MERITOR BRAKE HOSE (LEFT)	MERITOR BRAKE HOSE (RIGHT)
									FORD(Cont.)
									F300, F350 SERIES PICKUP-1TON(Cont.)
R44145049[381]	2-11/32 "	R42R55749	R42R55748	R4011237	R44141808	R4113263[239]	N/A	R4578325	R4578324
R44145055[405]	2-11/32 "	R42R55749	R42R55748	R4011237	R44141808	R4110384[238]	N/A	R4578327	R4578326
R44145055[405]	2-11/32 "	R42R55749	R42R55748	R4011237	R44141808	R4113263[239]	N/A	R4578327	R4578326
R44140504[189]	1-1/8 "	R4133206	R4133207	R418187	NR	-	-	R4578183	R4578183
R44140504[189]	1-1/8 "	R4133206	R4133207	R418187	NR	-	-	R4578184	R4578184
R44140545[148]	1-3/16 "	R4133945	R4133946	R418188	NR	-	-	R4578184	R4578184
R44140545[148]	1-3/16 "	R4133945	R4133946	R418188	NR	-	-	R4578183	R4578183
R44145055[405]	2-11/32 "	R42R55749	R42R55748	R4011237	R44141808	R4113263[239]	N/A	R4578327	R4578326
R44145054[155]	2-11/32 "	R42R55749	R42R55748	R4011237	R44141808	R4110382[213]	N/A	R4578325	R4578324
R44145054[155]	2-11/32 "	R42R55749	R42R55748	R4011237	R44141808	R4110384[238]	N/A	R4578325	R4578324
R44145054[155]	2-11/32 "	R42R55749	R42R55748	R4011237	R44141808	R4113263[239]	N/A	R4578325	R4578324
R44145049[381]	2-11/32 "	R42R55749	R42R55748	R4011237	R44141808	R4113355[234]	N/A	R4578325	R4578324
R44145055[405]	2-11/32 "	R42R55749	R42R55748	R4011237	R44141808	R4110384[238]	N/A	R4578327	R4578326
R44145049[381]	2-11/32 "	R42R55749	R42R55748	R4011237	R44141808	R4110384[238]	N/A	R4578325	R4578324
R44145049[381]	2-11/32 "	R42R55749	R42R55748	R4011237	R44141808	R4110382[213]	N/A	R4578325	R4578324
R44145054[155]	2-11/32 "	R42R55749	R42R55748	R4011237	R44141808	R4113355[234]	N/A	R4578325	R4578324
R44140504[189]	1-1/8 "	R4133206	R4133207	R418187	NR	-	-	R4578184	R4578184
R44140504[189]	1-1/8 "	R4133206	R4133207	R418187	NR	-	-	R4578183	R4578183
R44140545[148]	1-3/16 "	R4133945	R4133946	R418188	NR	-	-	R4578183	R4578183
R44140545[148]	1-3/16 "	R4133945	R4133946	R418188	NR	-	-	R4578184	R4578184
R44145054[155]	2-11/32 "	R42R55749	R42R55748	R4011237	R44141808	R4110382[213]	N/A	R4578325	R4578324
R44145054[155]	2-11/32 "	R42R55749	R42R55748	R4011237	R44141808	R4110384[238]	N/A	R4578325	R4578324
R44145054[155]	2-11/32 "	R42R55749	R42R55748	R4011237	R44141808	R4113355[234]	N/A	R4578325	R4578324
R44145055[405]	2-11/32 "	R42R55749	R42R55748	R4011237	R44141808	R4113263[239]	N/A	R4578327	R4578326
R44145055[405]	2-11/32 "	R42R55749	R42R55748	R4011237	R44141808	R4110384[238]	N/A	R4578327	R4578326
R44145049[381]	2-11/32 "	R42R55749	R42R55748	R4011237	R44141808	R4110384[238]	N/A	R4578325	R4578324
R44145054[155]	2-11/32 "	R42R55749	R42R55748	R4011237	R44141808	R4113263[239]	N/A	R4578325	R4578324
R44145049[381]	2-11/32 "	R42R55749	R42R55748	R4011237	R44141808	R4113355[234]	N/A	R4578325	R4578324
R44145049[381]	2-11/32 "	R42R55749	R42R55748	R4011237	R44141808	R4110382[213]	N/A	R4578325	R4578324
R44140504[189]	1-1/8 "	R4133206	R4133207	R418187	NR	-	-	R4578184	R4578184
R44140504[189]	1-1/8 "	R4133206	R4133207	R418187	NR	-	-	R4578183	R4578183
R44140545[148]	1-3/16 "	R4133945	R4133946	R418188	NR	-	-	R4578184	R4578184
R44140545[148]	1-3/16 "	R4133945	R4133946	R418188	NR	-	-	R4578183	R4578183
R44141127[181]	2-3/16 "	R42R55461P	R42R55460P	R4166713	R4090180P[290]	R148228[54]	N/A	R4578169[156]	R4577235
R44141237[175]	2-3/16 "	R42R55461P	R42R55460P	R4166713	R4090180P[290]	R148228[54]	N/A	R4578169[156]	R4577235
R44141174[405]	2-3/16 "	R42R55461P	R42R55460P	R4166713	R4090180P[290]	R148228[54]	N/A	R4578001[247]	R4577311
R44141487[381]	2-3/16 "	R42R55461P	R42R55460P	R4166713	R4090180P[290]	R148228[54]	N/A	R4578169[156]	R4577235
R44140504[189]	1 "	R4133725	R4133726	R4166822	NR	-	-	R4578183	R4578183
R44140545[148]	1-3/16 "	R4133945	R4133946	R418188	NR	-	-	R4578184	R4578184
R44141237[175]	2-3/16 "	R42R55461P	R42R55460P	R4166713	R4090180P[290]	R148228[54]	N/A	R4578169[156]	R4577235
R44141174[405]	2-3/16 "	R42R55461P	R42R55460P	R4166713	R4090180P[290]	R148228[54]	N/A	R4578001[247]	R4577311
R44141487[381]	2-3/16 "	R42R55461P	R42R55460P	R4166713	R4090180P[290]	R148228[54]	N/A	R4578169[156]	R4577235
R44141127[181]	2-3/16 "	R42R55461P	R42R55460P	R4166713	R4090180P[290]	R148228[54]	N/A	R4578169[156]	R4577235
R44140504[189]	1 "	R4133725	R4133726	R4166822	NR	-	-	R4578183	R4578183
R44140545[148]	1-3/16 "	R4133945	R4133946	R418188	NR	-	-	R4578184	R4578184
R44141237[175]	2-3/16 "	R42R55461P	R42R55460P	R4166713	R4090180P[290]	R148228[54]	N/A	R4578169[156]	R4577235
R44141127[181]	2-3/16 "	R42R55461P	R42R55460P	R4166713	R4090180P[290]	R148228[54]	N/A	R4578169[156]	R4577235
R44141174[405]	2-3/16 "	R42R55461P	R42R55460P	R4166713	R4090180P[290]	R148228[54]	N/A	R4578001[247]	R4577311
R44141487[381]	2-3/16 "	R42R55461P	R42R55460P	R4166713	R4090180P[290]	R148228[54]	N/A	R4578169[156]	R4577235
R44140504[189]	1 "	R4133725	R4133726	R4166822	NR	-	-	R4578183	R4578183
R44140504[189]	1-1/8 "	R4133206	R4133207	R418187	NR	-	-	R4578184	R4578184
R44140545[148]	1-3/16 "	R4133945	R4133946	R418188	NR	-	-	R4578184	R4578184
R44140545[148]	1-3/16 "	R4133945	R4133946	R418188	NR	-	-	R4578183	R4578183
R44141127[181]	2-3/16 "	R42R55461P	R42R55460P	R4166713	R4090180P[290]	R148228[54]	N/A	R4578169[156]	R4577235
R44141487[381]	2-3/16 "	R42R55461P	R42R55460P	R4166713	R4090180P[290]	R148228[54]	N/A	R4578169[156]	R4577235
R44141237[175]	2-3/16 "	R42R55461P	R42R55460P	R4166713	R4090180P[290]	R148228[54]	N/A	R4578001[247]	R4577311
R44141808[354]	2-3/16 "	R42R55461P	R42R55460P	R4166713	R4090180P[290]	R148228[54]	N/A	R4578001[247]	R4577311
R44141174[405]	2-3/16 "	R42R55461P	R42R55460P	R4166713	R4090180P[290]	R148228[54]	N/A	R4578001[247]	R4577311

238 - Manual Brakes, 7.3 liter Diesel Engine Except Speed Control
239 - Manual Brakes, 7.3 liter Diesel Engine with Speed Control
247 - 4x4, Dual Rear Wheels
290 - Use E-11222 for High Temperature Boots
354 - Rotor Only, With Dual Rear Wheels
381 - Rotor and Hub One Piece Assembly W/O ABS Ring
405 - Rotor Only

MAKE MODEL YEAR AXLE CODE AXLE WEIGHT	AXLE & BRK. TYPE	BRK. MFG.	BRAKE SIZE	FMSI	MERITOR DISC PAD OR BRAKE SHOE	MERITOR GUIDE PIN OR RETURN SPRING KIT	MERITOR CALIPER HWD. KIT OR RETURN SPRING KIT	MERITOR ADJUSTER KIT (LEFT WHEEL)	MERITOR ADJUSTER KIT (RIGHT WHEEL)
FORD(Cont.)									
F300, F350 SERIES PICKUP-1TON(Cont.)									
1991									
	Fd	DN		7330 - D450	MD450	R407130	60050135	NR	NR
	Fd	DN		7330 - D450	MD450	R407130	60050135	NR	NR
	Fd	DN		7330 - D450	MD450	R407130	60050135	NR	NR
	Ra	BX	12 " x 3 "	2140AT - 358	R46358	R40H608	R40H4087	R40H2598	R40H2599
	Ra	BX	12.125 x 3-1/2 "	2171T - 583	R468140	R40H608	R40H7299	R40H2598	R40H2599
Before 3/91	Fd	DN		7330 - D450	MD450	R407130	60050135	NR	NR
	Fd	DN		7330 - D450	MD450	R407130	60050135	NR	NR
	Fd	DN		7330 - D450	MD450	R407130	60050135	NR	NR
	Fd	DN		7330 - D450	MD450	R407130	60050135	NR	NR
	Ra	BX	12 " x 3 "	2140AT - 358	R46358	R40H608	R40H4087	R40H2598	R40H2599
	Ra	BX	12 " x 3 "	2140AT - 358	R46358	R40H608	R40H4087	R40H2598	R40H2599
	Ra	BX	12 " x 3 "	2140AT - 358	R46358	R40H608	R40H4087	R40H2598	R40H2599
	Ra	BX	12.125 x 3-1/2 "	2171T - 583	R468140	R40H608	R40H7299	R40H2598	R40H2599
1990									
	Fd	DN		7330 - D450	MD450	R407130	60050135	NR	NR
	Fd	DN		7330 - D450	MD450	R407130	60050135	NR	NR
	Fd	DN		7330 - D450	MD450	R407130	60050135	NR	NR
	Fd	DN		7330 - D450	MD450	R407130	60050135	NR	NR
	Ra	BX	12 " x 3 "	2140AT - 358	R46358	R40H608	R40H4087	R40H2598	R40H2599
	Ra	BX	12 " x 3 "	2140AT - 358	R46358	R40H608	R40H4087	R40H2598	R40H2599
	Ra	BX	12 " x 3 "	2140AT - 358	R46358	R40H608	R40H4087	R40H2598	R40H2599
	Ra	BX	12.125 x 3-1/2 "	2171T - 583	R468140	R40H608	R40H7299	R40H2598	R40H2599
1989									
	Fd	DN		7330 - D450	MD450	R407130	60050135	NR	NR
	Fd	DN		7330 - D450	MD450	R407130	60050135	NR	NR
	Fd	DN		7330 - D450	MD450	R407130	60050135	NR	NR
	Fd	DN		7330 - D450	MD450	R407130	60050135	NR	NR
	Ra	BX	12 " x 3 "	2140AT - 358	R46358	R40H608	R40H4087	R40H2598	R40H2599
	Ra	BX	12 " x 3 "	2140AT - 358	R46358	R40H608	R40H4087	R40H2598	R40H2599
	Ra	BX	12 " x 3 "	2140AT - 358	R46358	R40H608	R40H4087	R40H2598	R40H2599
	Ra	BX	12.125 x 3-1/2 "	2171T - 583	R468140	R40H608	R40H7299	R40H2598	R40H2599
1988									
	Fd	DN		7330 - D450	MD450	R407130	60050135	NR	NR
	Fd	DN		7330 - D450	MD450	R407130	60050135	NR	NR
	Fd	DN		7330 - D450	MD450	R407130	60050135	NR	NR
	Fd	DN		7330 - D450	MD450	R407130	60050135	NR	NR
	Ra	BX	12 " x 3 "	2140AT - 358	R46358	R40H608	R40H4087	R40H2598	R40H2599
	Ra	BX	12 " x 3 "	2140AT - 358	R46358	R40H608	R40H4087	R40H2598	R40H2599
	Ra	BX	12 " x 3 "	2140AT - 358	R46358	R40H608	R40H4087	R40H2598	R40H2599
	Ra	BX	12.125 x 3-1/2 "	2171T - 583	R468140	R40H608	R40H7299	R40H2598	R40H2599
1987									
	Fd	DN		7330 - D450	MD450	R407130	60050135	NR	NR
	Fd	DN		7330 - D450	MD450	R407130	60050135	NR	NR
	Fd	DN		7330 - D450	MD450	R407130	60050135	NR	NR
	Fd	DN		7330 - D450	MD450	R407130	60050135	NR	NR
	Ra	BX	12 " x 3 "	2140AT - 358	R46358	R40H608	R40H4087	R40H2598	R40H2599
	Ra	BX	12 " x 3 "	2140AT - 358	R46358	R40H608	R40H4087	R40H2598	R40H2599
	Ra	BX	12 " x 3 "	2140AT - 358	R46358	R40H608	R40H4087	R40H2598	R40H2599
	Ra	BX	12.125 x 3-1/2 "	2171T - 583	R468140	R40H608	R40H7299	R40H2598	R40H2599
1986									
	Fd	DN		7054 - D120	MD120	R407130	R407130	NR	NR
	Fd	DN		7054 - D120	MD120	R407130	R407130	NR	NR
	Fd	DN		7054 - D120	MD120	R407130	R407130	NR	NR
	Fd	DN		7054 - D120	MD120	R407130	R407130	NR	NR
	Ra	BX	12 " x 3 "	2140AT - 358	R46358	R40H608	R40H4087	R40H2598	R40H2599
	Ra	BX	12 " x 3 "	2140AT - 358	R46358	R40H608	R40H4087	R40H2598	R40H2599
	Ra	BX	12 " x 3 "	2140AT - 358	R46358	R40H608	R40H4087	R40H2598	R40H2599
	Ra	BX	12 " x 3 "	2140AT - 358	R46358	R40H608	R40H4087	R40H2598	R40H2599
1985									
	Fd	DN		7054 - D120	MD120	R40H05025	60050135	NR	NR
	Fd	DN		7054 - D120	MD120	R40H05025	60050135	NR	NR
	Fd	DN		7054 - D120	MD120	R40H05025	60050135	NR	NR
	Ra	BX	12 " x 3 "	2140AT - 358	R46358	R40H608	R40H4087	R40H2598	R40H2599
	Ra	BX	12 " x 3 "	2140AT - 358	R46358	R40H608	R40H4087	R40H2598	R40H2599

41 - Aluminum piston
156 - 4x2 With Single Rear Wheels
181 - Rotor Only, Machine Rotor After Re-hub
54 - Manual Brakes
167 - Except 10 1/4" Ring Gear
189 - Single Rear Wheels, 10 1/4" Ring Gear
148 - With 10 1/2" Ring Gear
175 - Rotor Only; 3.54, 4.09 Ratio
247 - 4x4, Dual Rear Wheels

MERITOR DRUM OR ROTOR NO.	CALIPER OR CYLINDER BORE SIZE	MERITOR CALIPER OR WHEEL CYLINDER (LEFT)	MERITOR CALIPER OR WHEEL CYLINDER (RIGHT)	MERITOR CALIPER OR WHEEL CYLINDER REPAIR KIT	MERITOR CALIPER PISTON	MERITOR MASTER CYLINDER	MERITOR MASTER CYLINDER KIT	MERITOR BRAKE HOSE (LEFT)	MERITOR BRAKE HOSE (RIGHT)
									FORD(Cont.)
									F300, F350 SERIES PICKUP-1TON(Cont.)
R44141127[181]	2-3/16 "	R42R55461P	R42R55460P	R4166713	R4090180P[290]	R148228[54]	N/A	R4578169[156]	R4577235
R44141237[175]	2-3/16 "	R42R55461P	R42R55460P	R4166713	R4090180P[290]	R148228[54]	N/A	R4578169[156]	R4577235
R44141487[381]	2-3/16 "	R42R55461P	R42R55460P	R4166713	R4090180P[290]	R148228[54]	N/A	R4578169[156]	R4577235
R44140504[189]	1 "	R4133725	R4133726	R4166822	NR	-	-	R4577245	R4577245
R44140545[148]	1-3/16 "	R4133945	R4133946	R418188	NR	-	-	R4577245	R4577245
R44141127[181]	2-3/16 "	R42R55461P	R42R55460P	R4166713	R4090180P[290]	R148228[54]	N/A	R4578169[156]	R4577235
R44141487[381]	2-3/16 "	R42R55461P	R42R55460P	R4166713	R4090180P[290]	R148228[54]	N/A	R4578169[156]	R4577235
R44141174[405]	2-3/16 "	R42R55461P	R42R55460P	R4166713	R4090180P[290]	R148228[54]	N/A	R4578001[247]	R4577311
R44141237[175]	2-3/16 "	R42R55461P	R42R55460P	R4166713	R4090180P[290]	R148228[54]	N/A	R4578001[247]	R4577311
R44140278[345]	1-3/16 "	R4133945	R4133946	R418188	NR	-	-	R4577245	R4577245
R44140344[167]	1 "	R4133725	R4133726	R4166822	NR	-	-	R4578666	R4578666
R44140504[189]	1 "	R4133725	R4133726	R4166822	NR	-	-	R4578666	R4578666
R44140545[148]	1-3/16 "	R4133945	R4133946	R418188	NR	-	-	R4578666	R4578666
R44141487[381]	2-3/16 "	R42R55461P	R42R55460P	R4166713	R4090180P[290]	R148228[54]	N/A	R4578169[156]	R4577235
R44141174[405]	2-3/16 "	R42R55461P	R42R55460P	R4166713	R4090180P[290]	R148228[54]	N/A	R4578001[247]	R4577311
R44141127[181]	2-3/16 "	R42R55461P	R42R55460P	R4166713	R4090180P[290]	R148228[54]	N/A	R4578169[156]	R4577235
R44141237[175]	2-3/16 "	R42R55461P	R42R55460P	R4166713	R4090180P[290]	R148228[54]	N/A	R4578001[247]	R4577311
R44140504[189]	1 "	R4133725	R4133726	R4166822	NR	-	-	R4577245	R4577245
R44140278[345]	1-3/16 "	R4133945	R4133946	R418188	NR	-	-	R4577245	R4577245
R44140344[167]	1 "	R4133725	R4133726	R4166822	NR	-	-	R4578666	R4578666
R44140545[148]	1-3/16 "	R4133945	R4133946	R418188	NR	-	-	R4578666	R4578666
R44141174[405]	2-3/16 "	R42R55461P	R42R55460P	R4166713	R4090180P[290]	R148228[54]	N/A	R4577311[259]	R4577311
R44141487[381]	2-3/16 "	R42R55461P	R42R55460P	R4166713	R4090180P[290]	R148228[54]	N/A	R4577235[259]	R4577235
R44141127[181]	2-3/16 "	R42R55461P	R42R55460P	R4166713	R4090180P[290]	R148228[54]	N/A	R4577235[259]	R4577235
R44141237[175]	2-3/16 "	R42R55461P	R42R55460P	R4166713	R4090180P[290]	R148228[54]	N/A	R4577311[259]	R4577311
R44140278[345]	1-3/16 "	R4133945	R4133946	R418188	NR	-	-	R4577245	R4577245
R44140344[167]	1 "	R4133725	R4133726	R4166822	NR	-	-	R4578666	R4578666
R44140504[189]	1 "	R4133725	R4133726	R4166822	NR	-	-	R4577245	R4577245
R44140545[148]	1-3/16 "	R4133945	R4133946	R418188	NR	-	-	R4578666	R4578666
R44141237[175]	2-3/16 "	R42R55461P	R42R55460P	R4166713	R4090180P[290]	R148228[54]	N/A	R4577311[259]	R4577311
R44141127[181]	2-3/16 "	R42R55461P	R42R55460P	R4166713	R4090180P[290]	R148228[54]	N/A	R4577235[259]	R4577235
R44141487[381]	2-3/16 "	R42R55461P	R42R55460P	R4166713	R4090180P[290]	R148228[54]	N/A	R4577235[259]	R4577235
R44141174[405]	2-3/16 "	R42R55461P	R42R55460P	R4166713	R4090180P[290]	R148228[54]	N/A	R4577311[259]	R4577311
R44140344[167]	1 "	R4133725	R4133726	R4166822	NR	-	-	R4578666	R4578666
R44140504[189]	1 "	R4133725	R4133726	R4166822	NR	-	-	R4577245	R4577245
R44140278[345]	1-3/16 "	R4133945	R4133946	R418188	NR	-	-	R4577245	R4577245
R44140545[148]	1-3/16 "	R4133945	R4133946	R418188	NR	-	-	R4578666	R4578666
R44141487[381]	2-3/16 "	R42R55461P	R42R55460P	R4166713	R4090180P[290]	R148228[54]	N/A	R4577235[259]	R4577235
R44141237[175]	2-3/16 "	R42R55461P	R42R55460P	R4166713	R4090180P[290]	R148228[54]	N/A	R4577311[259]	R4577311
R44141127[181]	2-3/16 "	R42R55461P	R42R55460P	R4166713	R4090180P[290]	R148228[54]	N/A	R4577235[259]	R4577235
R44141174[405]	2-3/16 "	R42R55461P	R42R55460P	R4166713	R4090180P[290]	R148228[54]	N/A	R4577311[259]	R4577311
R44140278[345]	1-3/16 "	R4133945	R4133946	R418188	NR	-	-	R4578666	R4578666
R44140504[189]	1 "	R4133725	R4133726	R4166822	NR	-	-	R4578666	R4578666
R44140344[167]	1 "	R4133725	R4133726	R4166822	NR	-	-	R4578666	R4578666
R44140545[148]	1-3/16 "	R4133945	R4133946	R418188	NR	-	-	R4578666	R4578666
R44141487[381]	2-3/16 "	R42R55456	R42R55456	R4166713	R4090029[41]	R4112008[54]	N/A	R4577235[259]	R4577235
R44141237[175]	2-3/16 "	R42R55456	R42R55456	R4166713	R4090029[41]	R4112008[54]	N/A	R4577311[259]	R4577311
R44141174[405]	2-3/16 "	R42R55456	R42R55456	R4166713	R4090029[41]	R4112008[54]	N/A	R4577311[259]	R4577311
R44141127[181]	2-3/16 "	R42R55456	R42R55456	R4166713	R4090029[41]	R4112008[54]	N/A	R4577235[259]	R4577235
R44140278[345]	1-1/8 "	R4133206	R4133207	R418187	NR	-	-	R4577613[263]	R4577613
R44140344[167]	1 "	R4133725	R4133726	R4166822	NR	-	-	R4577613[263]	R4577613
R44140468	1-1/8 "	R4133206	R4133207	R418187	NR	-	-	R4577612[262]	R4577612
R44140504[189]	1 "	R4133725	R4133726	R4166822	NR	-	-	R4577612[262]	R4577612
R44141237[175]	2-3/16 "	R42R55412	R42R55411	R4166713	R4090029[41]	R4112008[54]	N/A	R4577311[259]	R4577311
R44141127[181]	2-3/16 "	R42R55412	R42R55411	R4166713	R4090029[41]	R4112008[54]	N/A	R4577235[259]	R4577235
R44141174[405]	2-3/16 "	R42R55412	R42R55411	R4166713	R4090029[41]	R4112008[54]	N/A	R4577311[259]	R4577311
R44140278[345]	1-1/8 "	R4133206	R4133207	R418187	NR	-	-	R4577613[263]	R4577613
R44140468	1-1/8 "	R4133206	R4133207	R418187	NR	-	-	R4577612[262]	R4577612

259 - 4x2, Except Monobeam Axle
262 - 4x2 and 4x4 Monobeam Axle and 133", 153", 168" Wheel Base
263 - 4x2 and 4x4 Monobeam Axle with 137" and 161" Wheel Base
290 - Use E-11222 for High Temperature Boots
345 - Dual Rear Wheels, except 10.25" ring gear
381 - Rotor and Hub One Piece Assembly W/O ABS Ring
405 - Rotor Only

MAKE MODEL YEAR AXLE CODE AXLE WEIGHT	AXLE & BRK. TYPE	BRK. MFG.	BRAKE SIZE	FMSI	MERITOR DISC PAD OR BRAKE SHOE	MERITOR GUIDE PIN OR RETURN SPRING KIT	MERITOR CALIPER HWD. KIT OR RETURN SPRING KIT	MERITOR ADJUSTER KIT (LEFT WHEEL)	MERITOR ADJUSTER KIT (RIGHT WHEEL)
FORD(Cont.)									
F300, F350 SERIES PICKUP-1TON(Cont.)									
1985									
	Ra	BX	12 " x 3 "	2140AT - 358	R46358	R40H608	R40H4087	R40H2598	R40H2599
	Ra	BX	12 " x 3 "	2140AT - 358	R46358	R40H608	R40H4087	R40H2598	R40H2599
F046, F047	Fd	DN		7054 - D120	MD120	R40H05025	60050135	NR	NR
1984									
	Fd	DN		7054 - D120	MD120	R40H05025	60050135	NR	NR
	Fd	DN		7054 - D120	MD120	R40H05025	60050135	NR	NR
	Fd	DN		7054 - D120	MD120	R40H05025	60050135	NR	NR
	Ra	BX	12 " x 3 "	2140AT - 358	R46358	R40H608	R40H4087	R40H2598	R40H2599
	Ra	BX	12 " x 3 "	2140AT - 358	R46358	R40H608	R40H4087	R40H2598	R40H2599
	Ra	BX	12 " x 3 "	2140AT - 358	R46358	R40H608	R40H4087	R40H2598	R40H2599
	Ra	BX	12 " x 3 "	2140AT - 358	R46358	R40H608	R40H4087	R40H2598	R40H2599
F046, F047	Fd	DN		7054 - D120	MD120	R40H05025	60050135	NR	NR
1983									
	Fd	DN		7054 - D120	MD120	R40H05025	60050135	NR	NR
	Fd	DN		7054 - D120	MD120	R40H05025	60050135	NR	NR
	Fd	DN		7054 - D120	MD120	R40H05025	60050135	NR	NR
	Ra	BX	12 " x 3 "	2140AT - 358	R46358	R40H608	R40H4087	R40H2598	R40H2599
	Ra	BX	12 " x 3 "	2140AT - 358	R46358	R40H608	R40H4087	R40H2598	R40H2599
	Ra	BX	12 " x 3 "	2140AT - 358	R46358	R40H608	R40H4087	R40H2598	R40H2599
	Ra	BX	12 " x 3 "	2140AT - 358	R46358	R40H608	R40H4087	R40H2598	R40H2599
F046, F047	Fd	DN		7054 - D120	MD120	R40H05025	60050135	NR	NR
1982									
	Fd	DN		7054 - D120	MD120	R40H05025	60050135	NR	NR
	Fd	DN		7054 - D120	MD120	R40H05025	60050135	NR	NR
	Fd	DN		7054 - D120	MD120	R40H05025	60050135	NR	NR
	Ra	BX	12 " x 3 "	2140AT - 358	R46358	R40H608	R40H4087	R40H2598	R40H2599
	Ra	BX	12 " x 3 "	2140AT - 358	R46358	R40H608	R40H4087	R40H2598	R40H2599
	Ra	BX	12 " x 3 "	2140AT - 358	R46358	R40H608	R40H4087	R40H2598	R40H2599
	Ra	BX	12 " x 3 "	2140AT - 358	R46358	R40H608	R40H4087	R40H2598	R40H2599
F046, F047	Fd	DN		7054 - D120	MD120	R40H05025	60050135	NR	NR
1981									
	Fd	DN		7054 - D120	MD120	R40H05025	60050135	NR	NR
	Fd	DN		7054 - D120	MD120	R40H05025	60050135	NR	NR
	Ra	BX	12 " x 3 "	2140AT - 358	R46358	R40H608	R40H4087	R40H2598	R40H2599
	Ra	BX	12 " x 3 "	2140AT - 358	R46358	R40H608	R40H4087	R40H2598	R40H2599
	Ra	BX	12 " x 3 "	2140AT - 358	R46358	R40H608	R40H4087	R40H2598	R40H2599
	Ra	BX	12 " x 3 "	2140AT - 358	R46358	R40H608	R40H4087	R40H2598	R40H2599
	Ra	BX	12 " x 3 "	2140AT - 358	R46358	R40H608	R40H4087	R40H2598	R40H2599
	Ra	BX	12 " x 3 "	2140AT - 358	R46358	R40H608	R40H4087	R40H2598	R40H2599
	Ra	BX	12 " x 3 "	2140AT - 358	R46358	R40H608	R40H4087	R40H2598	R40H2599
	Ra	BX	12 " x 3 "	2140AT - 358	R46358	R40H608	R40H4087	R40H2598	R40H2599
1980									
	Fd	DN		7054 - D120	MD120	R40H05025	60050135	NR	NR
	Fd	DN		7054 - D120	MD120	R40H05025	60050135	NR	NR
	Ra	BX	12 " x 3 "	2140AT - 358	R46358	R40H608	R40H4087	R40H2598	R40H2599
	Ra	BX	12 " x 3 "	2140AT - 358	R46358	R40H608	R40H4087	R40H2598	R40H2599
	Ra	BX	12 " x 3 "	2140AT - 358	R46358	R40H608	R40H4087	R40H2598	R40H2599
	Ra	BX	12 " x 3 "	2140AT - 358	R46358	R40H608	R40H4087	R40H2598	R40H2599
	Ra	BX	12 " x 3 "	2140AT - 358	R46358	R40H608	R40H4087	R40H2598	R40H2599
	Ra	BX	12 " x 3 "	2140AT - 358	R46358	R40H608	R40H4087	R40H2598	R40H2599
	Ra	BX	12 " x 3 "	2140AT - 358	R46358	R40H608	R40H4087	R40H2598	R40H2599
	Ra	BX	12 " x 3 "	2140AT - 358	R46358	R40H608	R40H4087	R40H2598	R40H2599
1979									
	Fd	DN		7054 - D120	MD120	R40H05025	60050135	NR	NR
	Fd	DN		7054 - D120	MD120	R40H05025	60050135	NR	NR
	Ra	BX	12 " x 3 "	2140AT - 358	R46358	R40H608	R40H4087	R40H2598	R40H2599
	Ra	BX	12 " x 3 "	2140AT - 358	R46358	R40H608	R40H4087	R40H2598	R40H2599
	Ra	BX	12 " x 3 "	2140AT - 358	R46358	R40H608	R40H4087	R40H2598	R40H2599
	Ra	BX	12 " x 3 "	2140AT - 358	R46358	R40H608	R40H4087	R40H2598	R40H2599
	Ra	BX	12 " x 3 "	2140AT - 358	R46358	R40H608	R40H4087	R40H2598	R40H2599
	Ra	BX	12 " x 3 "	2140AT - 358	R46358	R40H608	R40H4087	R40H2598	R40H2599
	Ra	BX	12 " x 3 "	2140AT - 358	R46358	R40H608	R40H4087	R40H2598	R40H2599
	Ra	BX	12 " x 3 "	2140AT - 358	R46358	R40H608	R40H4087	R40H2598	R40H2599
1978									
	Fd	DN		7054 - D120	MD120	R40H05025	60050135	NR	NR

41 - Aluminum piston
175 - Rotor Only; 3.54, 4.09 Ratio
259 - 4x2, Except Monobeam Axle
54 - Manual Brakes
181 - Rotor Only, Machine Rotor After Re-hub
261 - 4x4, Except Monobeam Axle
167 - Except 10 1/4" Ring Gear
189 - Single Rear Wheels, 10 1/4" Ring Gear
262 - 4x2 and 4x4 Monobeam Axle and 133", 153", 168" Wheel Base

MERITOR DRUM OR ROTOR NO.	CALIPER OR CYLINDER BORE SIZE	MERITOR CALIPER OR WHEEL CYLINDER (LEFT)	MERITOR CALIPER OR WHEEL CYLINDER (RIGHT)	MERITOR CALIPER OR WHEEL CYLINDER REPAIR KIT	MERITOR CALIPER PISTON	MERITOR MASTER CYLINDER	MERITOR MASTER CYLINDER KIT	MERITOR BRAKE HOSE (LEFT)	MERITOR BRAKE HOSE (RIGHT)
									FORD(Cont.)
									F300, F350 SERIES PICKUP-1TON(Cont.)
R44140504[189]	1 "	R4133725	R4133726	R4166822	NR	-	-	R4577613[263]	R4577613
R44140344[167]	1 "	R4133725	R4133726	R4166822	NR	-	-	R4577612[262]	R4577612
R44141234[381]	2-3/16 "	R42R55412	R42R55411	R4166713	R4090029[41]	R4112008[54]	N/A	R4577235[259]	R4577235
R44141237[175]	2-3/16 "	R42R55412	R42R55411	R4166713	R4090029[41]	R4112008[54]	N/A	R4577311[259]	R4577311
R44141174[405]	2-3/16 "	R42R55412	R42R55411	R4166713	R4090029[41]	R4112008[54]	N/A	R4577311[259]	R4577311
R44141127[181]	2-3/16 "	R42R55412	R42R55411	R4166713	R4090029[41]	R4112008[54]	N/A	R4577235[259]	R4577235
R44140278[345]	1-1/8 "	R4133206	R4133207	R418187	NR	-	-	R4577245	R4577245
R44140468	1-1/8 "	R4133206	R4133207	R418187	NR	-	-	R4577245	R4577245
R44140504[189]	1 "	R4133725	R4133726	R4166822	NR	-	-	R4577245	R4577245
R44140344[167]	1 "	R4133725	R4133726	R4166822	NR	-	-	R4577245	R4577245
R44141234[381]	2-3/16 "	R42R55412	R42R55411	R4166713	R4090029[41]	R4112008[54]	N/A	R4577235[259]	R4577235
R44141174[405]	2-3/16 "	R42R55412	R42R55411	R4166713	R4090029[41]	R4112008[54]	N/A	R4577311[259]	R4577311
R44141127[181]	2-3/16 "	R42R55412	R42R55411	R4166713	R4090029[41]	R4112008[54]	N/A	R4577235[259]	R4577235
R44141237[175]	2-3/16 "	R42R55412	R42R55411	R4166713	R4090029[41]	R4112008[54]	N/A	R4577311[259]	R4577311
R44140278[345]	1-1/8 "	R4133206	R4133207	R418187	NR	-	-	R4577245	R4577245
R44140344[167]	1 "	R4133725	R4133726	R4166822	NR	-	-	R4577245	R4577245
R44140468	1-1/8 "	R4133206	R4133207	R418187	NR	-	-	R4577245	R4577245
R44140504[189]	1 "	R4133725	R4133726	R4166822	NR	-	-	R4577245	R4577245
R44141234[381]	2-3/16 "	R42R55412	R42R55411	R4166713	R4090029[41]	R4112008[54]	N/A	R4577235[259]	R4577235
R44141237[175]	2-3/16 "	R42R55412	R42R55411	R4166713	R4090029[41]	R4112008[54]	N/A	R4577311[259]	R4577311
R44141127[181]	2-3/16 "	R42R55412	R42R55411	R4166713	R4090029[41]	R4112008[54]	N/A	R4577235[259]	R4577235
R44141174[405]	2-3/16 "	R42R55412	R42R55411	R4166713	R4090029[41]	R4112008[54]	N/A	R4577311[259]	R4577311
R44140468	1-1/8 "	R4133206	R4133207	R418187	NR	-	-	R4577245	R4577245
R44140504[189]	1 "	R4133725	R4133726	R4166822	NR	-	-	R4577245	R4577245
R44140278[345]	1-1/8 "	R4133206	R4133207	R418187	NR	-	-	R4577245	R4577245
R44140344[167]	1 "	R4133725	R4133726	R4166822	NR	-	-	R4577245	R4577245
R44141234[381]	2-3/16 "	R42R55412	R42R55411	R4166713	R4090029[41]	R4112008[54]	N/A	R4577235[259]	R4577235
N/A	2-3/16 "	R42R55412	R42R55411	R4166713	R4090029[41]	R4111856[54]	N/A	R4577235[259]	R4577235
N/A	2-3/16 "	R42R55412	R42R55411	R4166713	R4090029[41]	R4111856[54]	N/A	R4577311[259]	R4577311
R44140278[345]	1 "	R4133725	R4133726	R4166822	NR	-	-	R4577245[261]	R4577245
R44140278[345]	1 "	R4133725	R4133726	R4166822	NR	-	-	R4577247[261]	R4577247
R44140344[167]	1 "	R4133725	R4133726	R4166822	NR	-	-	R4577247[261]	R4577247
R44140344[167]	1-1/8 "	R4133206	R4133207	R418187	NR	-	-	R4577245[261]	R4577245
R44140344[167]	1-1/8 "	R4133206	R4133207	R418187	NR	-	-	R4577247[261]	R4577247
R44140278[345]	1-1/8 "	R4133206	R4133207	R418187	NR	-	-	R4577245[261]	R4577245
R44140344[167]	1 "	R4133725	R4133726	R4166822	NR	-	-	R4577245[261]	R4577245
R44140278[345]	1-1/8 "	R4133206	R4133207	R418187	NR	-	-	R4577247[261]	R4577247
N/A	2-3/16 "	R42R55412	R42R55411	R4166713	R4090029[41]	R4111856[54]	N/A	R4577311[259]	R4577311
N/A	2-3/16 "	R42R55412	R42R55411	R4166713	R4090029[41]	R4111856[54]	N/A	R4577235[259]	R4577235
R44140278[345]	1 "	R4133725	R4133726	R4166822	NR	-	-	R4577245	R4577245
R44140344[167]	1-1/8 "	R4133206	R4133207	R418187	NR	-	-	R4577245	R4577245
R44140278[345]	1-1/8 "	R4133206	R4133207	R418187	NR	-	-	R4577245	R4577245
R44140278[345]	1 "	R4133725	R4133726	R4166822	NR	-	-	R4577245	R4577245
R44140344[167]	1 "	R4133725	R4133726	R4166822	NR	-	-	R4577245	R4577245
R44140278[345]	1-1/16 "	R4133791	R 418145	R4166821	NR	-	-	R4577245	R4577245
R44140344[167]	1-1/16 "	R4133791	R 418145	R4166821	NR	-	-	R4577245	R4577245
R44140344[167]	1 "	R4133725	R4133726	R4166822	NR	-	-	R4577245	R4577245
N/A	2-3/16 "	R42R55412	R42R55411	R4166713	R4090029[41]	R4111856[54]	N/A	R4577235[259]	R4577235
N/A	2-3/16 "	R42R55412	R42R55411	R4166713	R4090029[41]	R4111856[54]	N/A	R4577311[259]	R4577311
R44140344[167]	1-1/16 "	R4133791	R 418145	R4166821	NR	-	-	R4577247[261]	R4577247
R44140344[167]	1-1/8 "	R4133206	R4133207	R418187	NR	-	-	-	-
R44140344[167]	1 "	R4133725	R4133726	R4166822	NR	-	-	R4577245[261]	R4577245
R44140278[345]	1-1/16 "	R4133791	R 418145	R4166821	NR	-	-	R4577247[261]	R4577247
R44140278[345]	1-1/8 "	R4133206	R4133207	R418187	NR	-	-	-	-
R44140344[167]	1 "	R4133725	R4133726	R4166822	NR	-	-	-	-
R44140278[345]	1 "	R4133725	R4133726	R4166822	NR	-	-	-	-
R44140278[345]	1 "	R4133725	R4133726	R4166822	NR	-	-	R4577245[261]	R4577245
N/A	2-3/16 "	R42R55412	R42R55411	R4166713	R4090029[41]	R4111856[54]	N/A	R4577235[259]	R4577235

263 - 4x2 and 4x4 Monobeam Axle with 137" and 161" Wheel Base
345 - Dual Rear Wheels, except 10.25" ring gear
381 - Rotor and Hub One Piece Assembly W/O ABS Ring
405 - Rotor Only

MAKE MODEL YEAR AXLE CODE AXLE WEIGHT	AXLE & BRK. TYPE	BRK. MFG.	BRAKE SIZE	FMSI	MERITOR DISC PAD OR BRAKE SHOE	MERITOR GUIDE PIN OR RETURN SPRING KIT	MERITOR CALIPER HWD. KIT OR RETURN SPRING KIT	MERITOR ADJUSTER KIT (LEFT WHEEL)	MERITOR ADJUSTER KIT (RIGHT WHEEL)
FORD(Cont.)									
F300, F350 SERIES PICKUP-1TON(Cont.)									
1978									
	Fd	DN		7054 - D120	MD120	R40H05025	60050135	NR	NR
	Ra	BX	12 " x 3 "	2140AT - 358	R46358	R40H608	R40H4087	R40H2598	R40H2599
	Ra	BX	12 " x 3 "	2140AT - 358	R46358	R40H608	R40H4087	R40H2598	R40H2599
	Ra	BX	12 " x 3 "	2140AT - 358	R46358	R40H608	R40H4087	R40H2598	R40H2599
	Ra	BX	12 " x 3 "	2140AT - 358	R46358	R40H608	R40H4087	R40H2598	R40H2599
	Ra	BX	12 " x 3 "	2140AT - 358	R46358	R40H608	R40H4087	R40H2598	R40H2599
	Ra	BX	12 " x 3 "	2140AT - 358	R46358	R40H608	R40H4087	R40H2598	R40H2599
	Ra	BX	12 " x 3 "	2140AT - 358	R46358	R40H608	R40H4087	R40H2598	R40H2599
	Ra	BX	12 " x 3 "	2140AT - 358	R46358	R40H608	R40H4087	R40H2598	R40H2599
1977									
	Fd	DN		7054 - D120	MD120	R40H05025	60050135	NR	NR
	Fd	DN		7054 - D120	MD120	R40H05025	60050135	NR	NR
	Ra	BX	12 " x 3 "	2140AT - 358	R46358	R40H608	R40H4087	R40H2598	R40H2599
	Ra	BX	12 " x 3 "	2140AT - 358	R46358	R40H608	R40H4087	R40H2598	R40H2599
	Ra	BX	12 " x 3 "	2140AT - 358	R46358	R40H608	R40H4087	R40H2598	R40H2599
	Ra	BX	12 " x 3 "	2140AT - 358	R46358	R40H608	R40H4087	R40H2598	R40H2599
	Ra	BX	12 " x 3 "	2140AT - 358	R46358	R40H608	R40H4087	R40H2598	R40H2599
	Ra	BX	12 " x 3 "	2140AT - 358	R46358	R40H608	R40H4087	R40H2598	R40H2599
	Ra	BX	12 " x 3 "	2140AT - 358	R46358	R40H608	R40H4087	R40H2598	R40H2599
	Ra	BX	12 " x 3 "	2140AT - 358	R46358	R40H608	R40H4087	R40H2598	R40H2599
1976									
	Fd	DN		7054 - D120	MD120	R40H05025	60050135	NR	NR
	Fd	DN		7054 - D120	MD120	R40H05025	60050135	NR	NR
	Ra	BX	12 " x 3 "	2140AT - 358	R46358	R40H608	R40H4087	R40H2598	R40H2599
	Ra	BX	12 " x 3 "	2140AT - 358	R46358	R40H608	R40H4087	R40H2598	R40H2599
	Ra	BX	12 " x 3 "	2140AT - 358	R46358	R40H608	R40H4087	R40H2598	R40H2599
	Ra	BX	12 " x 3 "	2140AT - 358	R46358	R40H608	R40H4087	R40H2598	R40H2599
	Ra	BX	12 " x 3 "	2140AT - 358	R46358	R40H608	R40H4087	R40H2598	R40H2599
	Ra	BX	12 " x 3 "	2140AT - 358	R46358	R40H608	R40H4087	R40H2598	R40H2599
	Ra	BX	12 " x 3 "	2140AT - 358	R46358	R40H608	R40H4087	R40H2598	R40H2599
	Ra	BX	12 " x 3 "	2140AT - 358	R46358	R40H608	R40H4087	R40H2598	R40H2599
1975									
	Ra	BX	12 " x 3 "	2140AT - 358	R46358	R40H608	R40H4087	R40H2598	R40H2599
	Ra	BX	12 " x 3 "	2140AT - 358	R46358	R40H608	R40H4087	R40H2598	R40H2599
	Ra	BX	12 " x 3 "	2140AT - 358	R46358	R40H608	R40H4087	R40H2598	R40H2599
	Ra	BX	12 " x 3 "	2140AT - 358	R46358	R40H608	R40H4087	R40H2598	R40H2599
1974									
	Ra	BX	12 " x 3 "	2140AT - 358	R46358	R40H608	R40H4087	R40H2598	R40H2599
	Ra	BX	12 " x 3 "	2140AT - 358	R46358	R40H608	R40H4087	R40H2598	R40H2599
	Ra	BX	12 " x 3 "	2140AT - 358	R46358	R40H608	R40H4087	R40H2598	R40H2599
	Ra	BX	12 " x 3 "	2140AT - 358	R46358	R40H608	R40H4087	R40H2598	R40H2599
1973									
	Ra	BX	12 " x 3 "	2140AT - 358	R46358	R40H608	R40H4087	R40H2598	R40H2599
	Ra	BX	12 " x 3 "	2140AT - 358	R46358	R40H608	R40H4087	R40H2598	R40H2599
	Ra	BX	12 " x 3 "	2140AT - 358	R46358	R40H608	R40H4087	R40H2598	R40H2599
	Ra	BX	12 " x 3 "	2140AT - 358	R46358	R40H608	R40H4087	R40H2598	R40H2599
1972									
	Fa	BX	12 " x 3 "	2140AT - 358	R46358	R40H547	R40H7146	R40H2598	R40H2599
	Ra	BX	12 " x 3 "	2140AT - 358	R46358	R40H608	R40H4087	R40H2598	R40H2599
	Ra	BX	12 " x 3 "	2140AT - 358	R46358	R40H608	R40H4087	R40H2598	R40H2599
	Ra	BX	12 " x 3 "	2140AT - 358	R46358	R40H608	R40H4087	R40H2598	R40H2599
	Ra	BX	12 " x 3 "	2140AT - 358	R46358	R40H608	R40H4087	R40H2598	R40H2599
F350 SUPERDUTY SERIES PICKUP-1TON									
2008									
2 x 4, DRW	Fd	TRW		7974 - D1069	MD1069	N/R	R4012081	N/R	N/R
	Fd	TRW		7974 - D1069	MD1069	N/R	R4012081	N/R	N/R
	Fd	TRW		7974 - D1069	MD1069	N/R	R4012081	N/R	N/R
	Fd	TRW		7974 - D1069	MD1069	N/R	R4012081	N/R	N/R
	Rd	TRW		7973 - D1067	MD1067	N/R	R4012252	N/R	N/R
	Rd	TRW		7973 - D1067	MD1067	N/R	R4012252	N/R	N/R
2 x 4, SRW	Fd	TRW		7974 - D1069	MD1069	N/R	R4012081	N/R	N/R
	Fd	TRW		7974 - D1069	MD1069	N/R	R4012081	N/R	N/R
	Fd	TRW		7974 - D1069	MD1069	N/R	R4012081	N/R	N/R

41 - Aluminum piston
259 - 4x2, Except Monobeam Axle
363 - Piston includes Boots and Seals
54 - Manual Brakes
261 - 4x4, Except Monobeam Axle
401 - Gas Engine w/o Brake Control Valve
167 - Except 10 1/4" Ring Gear
345 - Dual Rear Wheels, except 10.25" ring gear
402 - Gas Engine With Integrated Brake Control Valve

MERITOR DRUM OR ROTOR NO.	CALIPER OR CYLINDER BORE SIZE	MERITOR CALIPER OR WHEEL CYLINDER (LEFT)	MERITOR CALIPER OR WHEEL CYLINDER (RIGHT)	MERITOR CALIPER OR WHEEL CYLINDER REPAIR KIT	MERITOR CALIPER PISTON	MERITOR MASTER CYLINDER	MERITOR MASTER CYLINDER KIT	MERITOR BRAKE HOSE (LEFT)	MERITOR BRAKE HOSE (RIGHT)
									FORD(Cont.)
									F300, F350 SERIES PICKUP-1TON(Cont.)
N/A	2-3/16 "	R42R55412	R42R55411	R4166713	R4090029[41]	R4111856[54]	N/A	R4577311[259]	R4577311
R44140344[167]	1-1/16 "	R4133791	R 418145	R4166821	NR	-	-	R4577247[261]	R4577247
R44140278[345]	1 "	R4133725	R4133726	R4166822	NR	-	-	-	-
R44140278[345]	1 "	R4133725	R4133726	R4166822	NR	-	-	R4577245[261]	R4577245
R44140344[167]	1 "	R4133725	R4133726	R4166822	NR	-	-	-	-
R44140344[167]	1-1/8 "	R4133206	R4133207	R418187	NR	-	-	-	-
R44140278[345]	1-1/16 "	R4133791	R 418145	R4166821	NR	-	-	R4577247[261]	R4577247
R44140278[345]	1-1/8 "	R4133206	R4133207	R418187	NR	-	-	-	-
R44140344[167]	1 "	R4133725	R4133726	R4166822	NR	-	-	R4577245[261]	R4577245
N/A	2-3/16 "	R42R55412	R42R55411	R4166713	R4090029[41]	R4111856[54]	N/A	R4577311[259]	R4577311
N/A	2-3/16 "	R42R55412	R42R55411	R4166713	R4090029[41]	R4111856[54]	N/A	R4577235[259]	R4577235
R44140278[345]	1 "	R4133725	R4133726	R4166822	NR	-	-	-	-
R44140344[167]	1-1/8 "	R4133206	R4133207	R418187	NR	-	-	-	-
R44140278[345]	1 "	R4133725	R4133726	R4166822	NR	-	-	R4577245[261]	R4577245
R44140278[345]	1-1/8 "	R4133206	R4133207	R418187	NR	-	-	-	-
R44140344[167]	1-1/16 "	R4133791	R 418145	R4166821	NR	-	-	R4577247[261]	R4577247
R44140344[167]	1 "	R4133725	R4133726	R4166822	NR	-	-	R4577245[261]	R4577245
R44140344[167]	1 "	R4133725	R4133726	R4166822	NR	-	-	-	-
R44140278[345]	1-1/16 "	R4133791	R 418145	R4166821	NR	-	-	R4577247[261]	R4577247
N/A	2-3/16 "	R42R55412	R42R55411	R4166713	R4090029[41]	R4111856[54]	N/A	R4577235[259]	R4577235
N/A	2-3/16 "	R42R55412	R42R55411	R4166713	R4090029[41]	R4111856[54]	N/A	R4577311[259]	R4577311
R44140344[167]	1 "	R4133725	R4133726	R4166822	NR	-	-	-	-
R44140344[167]	1 "	R4133725	R4133726	R4166822	NR	-	-	R4577245[261]	R4577245
R44140344[167]	1-1/16 "	R4133791	R 418145	R4166821	NR	-	-	R4577247[261]	R4577247
R44140344[167]	1-1/8 "	R4133206	R4133207	R418187	NR	-	-	-	-
R44140278[345]	1 "	R4133725	R4133726	R4166822	NR	-	-	-	-
R44140278[345]	1-1/8 "	R4133206	R4133207	R418187	NR	-	-	-	-
R44140278[345]	1 "	R4133725	R4133726	R4166822	NR	-	-	R4577245[261]	R4577245
R44140278[345]	1-1/16 "	R4133791	R 418145	R4166821	NR	-	-	R4577247[261]	R4577247
R44140344[167]	1-1/8 "	R4133206	R4133207	R418187	NR	-	-	-	-
R44140278[345]	1 "	R4133725	R4133726	R4166822	NR	-	-	-	-
R44140278[345]	1-1/8 "	R4133206	R4133207	R418187	NR	-	-	-	-
R44140344[167]	1 "	R4133725	R4133726	R4166822	NR	-	-	-	-
R44140278[345]	1 "	R4133725	R4133726	R4166822	NR	-	-	-	-
R44140278[345]	1-1/8 "	R4133206	R4133207	R418187	NR	-	-	-	-
R44140344[167]	1-1/8 "	R4133206	R4133207	R418187	NR	-	-	-	-
R44140344[167]	1 "	R4133725	R4133726	R4166822	NR	-	-	-	-
R44140344[167]	1 "	R4133725	R4133726	R4166822	NR	-	-	-	-
R44140278[345]	1-1/8 "	R4133206	R4133207	R418187	NR	-	-	-	-
R44140278[345]	1 "	R4133725	R4133726	R4166822	NR	-	-	-	-
-		-	-	-	NR	-	-	-	-
R44140344[167]	1-1/8 "	R4133206	R4133207	R418187	NR	-	-	-	-
R44140344[167]	1 "	R4133725	R4133726	R4166822	NR	-	-	-	-
R44140278[345]	1 "	R4133725	R4133726	R4166822	NR	-	-	-	-
R44140278[345]	1-1/8 "	R4133206	R4133207	R418187	NR	-	-	-	-
									F350 SUPERDUTY SERIES PICKUP-1TON
R441713853[405]	60mm	R4212078	R4212077	R4012080	-	R413013835[408]	-	R457013837	R457013838
R441713853[405]	60mm	R4212078	R4212077	R4012080	-	R413013834[407]	-	R457013837	R457013838
R441713853[405]	60mm	R4212078	R4212077	R4012080	-	R413013833[402]	-	R457013837	R457013838
R441713853[405]	60mm	R4212078	R4212077	R4012080	-	R413013832[401]	-	R457013837	R457013838
R44145280[405]	54mm	R4212249	R4212248	-	R4012250[363]	-	-	R457013854	-
R44145280[405]	54mm	R4212249	R4212248	-	R4012250[363]	-	-	R457013827	R457013843
R441713831[405]	60mm	R4212084	R4212083	R4012080	-	R413013832[401]	-	R457013824	R457013825
R441713831[405]	60mm	R4212084	R4212083	R4012080	-	R413013835[408]	-	R457013824	R457013825
R441713831[405]	60mm	R4212084	R4212083	R4012080	-	R413013834[407]	-	R457013824	R457013825

405 - Rotor Only

407 - Diesel Engine w/o Brake Control Valve

408 - Diesel Engine with Integrated Brake Control Valve

MAKE MODEL YEAR AXLE CODE AXLE WEIGHT	AXLE & BRK. TYPE	BRK. MFG.	BRAKE SIZE	FMSI	MERITOR DISC PAD OR BRAKE SHOE	MERITOR GUIDE PIN OR RETURN SPRING KIT	MERITOR CALIPER HWD. KIT OR RETURN SPRING KIT	MERITOR ADJUSTER KIT (LEFT WHEEL)	MERITOR ADJUSTER KIT (RIGHT WHEEL)
FORD(Cont.)									
F350 SUPERDUTY SERIES PICKUP-1TON									
2008									
2 x 4, SRW	Fd	TRW		7974 - D1069	MD1069	N/R	R4012081	N/R	N/R
	Rd	TRW		7973 - D1068	MD1068	N/R	R4012247	N/R	N/R
	Rd	TRW		7973 - D1068	MD1068	N/R	R4012247	N/R	N/R
2007									
2 x 4, DRW	Fd	TRW		7974 - D1069	MD1069	N/R	R4012081	N/R	N/R
	Fd	TRW		7974 - D1069	MD1069	N/R	R4012081	N/R	N/R
	Fd	TRW		7974 - D1069	MD1069	N/R	R4012081	N/R	N/R
	Fd	TRW		7974 - D1069	MD1069	N/R	R4012081	N/R	N/R
	Rd	TRW		7973 - D1067	MD1067	N/R	R4012252	N/R	N/R
	Rd	TRW		7973 - D1067	MD1067	N/R	R4012252	N/R	N/R
2 x 4, SRW	Fd	TRW		7974 - D1069	MD1069	N/R	R4012081	N/R	N/R
	Fd	TRW		7974 - D1069	MD1069	N/R	R4012081	N/R	N/R
	Fd	TRW		7974 - D1069	MD1069	N/R	R4012081	N/R	N/R
	Fd	TRW		7974 - D1069	MD1069	N/R	R4012081	N/R	N/R
	Rd	TRW		7973 - D1068	MD1068	N/R	R4012247	N/R	N/R
	Rd	TRW		7973 - D1068	MD1068	N/R	R4012247	N/R	N/R
2006									
2 x 4, DRW	Fd	TRW		7974 - D1069	MD1069	N/R	R4012081	N/R	N/R
	Fd	TRW		7974 - D1069	MD1069	N/R	R4012081	N/R	N/R
	Fd	TRW		7974 - D1069	MD1069	N/R	R4012081	N/R	N/R
	Fd	TRW		7974 - D1069	MD1069	N/R	R4012081	N/R	N/R
	Fd	TRW		7974 - D1069	MD1069	N/R	R4012081	N/R	N/R
	Fd	TRW		7974 - D1069	MD1069	N/R	R4012081	N/R	N/R
	Rd	TRW		7973 - D1067	MD1067	N/R	R4012252	N/R	N/R
	Rd	TRW		7973 - D1067	MD1067	N/R	R4012252	N/R	N/R
2 x 4, SRW	Fd	TRW		7974 - D1069	MD1069	N/R	R4012081	N/R	N/R
	Fd	TRW		7974 - D1069	MD1069	N/R	R4012081	N/R	N/R
	Fd	TRW		7974 - D1069	MD1069	N/R	R4012081	N/R	N/R
	Fd	TRW		7974 - D1069	MD1069	N/R	R4012081	N/R	N/R
	Fd	TRW		7974 - D1069	MD1069	N/R	R4012081	N/R	N/R
	Fd	TRW		7974 - D1069	MD1069	N/R	R4012081	N/R	N/R
	Rd	TRW		7973 - D1068	MD1068	N/R	R4012247	N/R	N/R
	Rd	TRW		7973 - D1068	MD1068	N/R	R4012247	N/R	N/R
4 X 4 DRW	Fd	TRW		7974 - D1069	MD1069	N/R	R4012081	N/R	N/R
	Fd	TRW		7974 - D1069	MD1069	N/R	R4012081	N/R	N/R
	Fd	TRW		7974 - D1069	MD1069	N/R	R4012081	N/R	N/R
	Fd	TRW		7974 - D1069	MD1069	N/R	R4012081	N/R	N/R
	Fd	TRW		7974 - D1069	MD1069	N/R	R4012081	N/R	N/R
	Fd	TRW		7974 - D1069	MD1069	N/R	R4012081	N/R	N/R
	Rd	TRW		7973 - D1067	MD1067	N/R	R4012252	N/R	N/R
	Rd	TRW		7973 - D1067	MD1067	N/R	R4012252	N/R	N/R
4 X 4 SRW	Rd	TRW		7973 - D1068	MD1068	N/R	R4012247	N/R	N/R
	Rd	TRW		7973 - D1068	MD1068	N/R	R4012247	N/R	N/R
4 X 4 SRW Except Harley Davidson Package	Fd	TRW		7974 - D1069	MD1069	N/R	R4012081	N/R	N/R
	Fd	TRW		7974 - D1069	MD1069	N/R	R4012081	N/R	N/R
	Fd	TRW		7974 - D1069	MD1069	N/R	R4012081	N/R	N/R
	Fd	TRW		7974 - D1069	MD1069	N/R	R4012081	N/R	N/R
	Fd	TRW		7974 - D1069	MD1069	N/R	R4012081	N/R	N/R
	Fd	TRW		7974 - D1069	MD1069	N/R	R4012081	N/R	N/R
4 X 4 SRW Harley Davidson Package	Fd	TRW		7974 - D1069	MD1069	N/R	R4012081	N/R	N/R
	Fd	TRW		7974 - D1069	MD1069	N/R	R4012081	N/R	N/R
	Fd	TRW		7974 - D1069	MD1069	N/R	R4012081	N/R	N/R
	Fd	TRW		7974 - D1069	MD1069	N/R	R4012081	N/R	N/R
	Fd	TRW		7974 - D1069	MD1069	N/R	R4012081	N/R	N/R
	Fd	TRW		7974 - D1069	MD1069	N/R	R4012081	N/R	N/R
2005									
2 X 4, DRW	Fd	TRW		7974 - D1069	MD1069	N/R	R4012081	N/R	N/R
	Fd	TRW		7974 - D1069	MD1069	N/R	R4012081	N/R	N/R
	Fd	TRW		7974 - D1069	MD1069	N/R	R4012081	N/R	N/R
	Fd	TRW		7974 - D1069	MD1069	N/R	R4012081	N/R	N/R
	Fd	TRW		7974 - D1069	MD1069	N/R	R4012081	N/R	N/R
	Fd	TRW		7974 - D1069	MD1069	N/R	R4012081	N/R	N/R

363 - Piston includes Boots and Seals
394 - 8 Stud Rotor and Hub one piece Assembly
401 - Gas Engine w/o Brake Control Valve
402 - Gas Engine With Integrated Brake Control Valve
403 - To 7/19/05 Diesel Engine w/o Speed Control
404 - To 7/19/05 Diesel Engine with Speed Control
405 - From 7/19/05 Diesel Engine w/o Brake Control Valve
405 - Rotor Only
406 - From 7/19/05 Diesel Engine with Integrated Brake Control Valve

MERITOR DRUM OR ROTOR NO.	CALIPER OR CYLINDER BORE SIZE	MERITOR CALIPER OR WHEEL CYLINDER (LEFT)	MERITOR CALIPER OR WHEEL CYLINDER (RIGHT)	MERITOR CALIPER OR WHEEL CYLINDER REPAIR KIT	MERITOR CALIPER PISTON	MERITOR MASTER CYLINDER	MERITOR MASTER CYLINDER KIT	MERITOR BRAKE HOSE (LEFT)	MERITOR BRAKE HOSE (RIGHT)
									FORD(Cont.)
									F350 SUPERDUTY SERIES PICKUP-1TON
R441713831[405]	60mm	R4212084	R4212083	R4012080	-	R413013833[402]	-	R457013824	R457013825
R44145258[405]	48mm	-	-	-	-	-	-	R457013826	-
R44145258[405]	48mm	-	-	-	-	-	-	R457013827	R457013843
R441713846[405]	60mm	R4212078	R4212077	R4012080	-	R413013819[405]	-	R457013824	R457013825
R441713846[405]	60mm	R4212078	R4212077	R4012080	-	R413013818[402]	-	R457013824	R457013825
R441713846[405]	60mm	R4212078	R4212077	R4012080	-	R413013817[401]	-	R457013824	R457013825
R441713846[405]	60mm	R4212078	R4212077	R4012080	-	R413013820[406]	-	R457013824	R457013825
R44145280[405]	54mm	R4212249	R4212248	-	R4012250[363]	-	-	R457013847	-
R44145280[405]	54mm	R4212249	R4212248	-	R4012250[363]	-	-	R457013827	R457013851
R44145255[394]	60mm	R4212084	R4212083	R4012080	-	R413013817[401]	-	R457013824	R457013825
R44145255[394]	60mm	R4212084	R4212083	R4012080	-	R413013820[406]	-	R457013824	R457013825
R44145255[394]	60mm	R4212084	R4212083	R4012080	-	R413013818[402]	-	R457013824	R457013825
R44145255[394]	60mm	R4212084	R4212083	R4012080	-	R413013819[405]	-	R457013824	R457013825
R44145258[405]	48mm	R4212244	R4212243	R4012246	R4012245[363]	-	-	R457013827	R457013828
R44145258[405]	48mm	R4212244	R4212243	R4012246	R4012245[363]	-	-	R457013826	-
R441713846[405]	60mm	R4212078	R4212077	R4012080	-	R413013817[401]	-	R457013824	R457013825
R441713846[405]	60mm	R4212078	R4212077	R4012080	-	R413013829[403]	-	R457013824	R457013825
R441713846[405]	60mm	R4212078	R4212077	R4012080	-	R413013818[402]	-	R457013824	R457013825
R441713846[405]	60mm	R4212078	R4212077	R4012080	-	R413013830[404]	-	R457013824	R457013825
R441713846[405]	60mm	R4212078	R4212077	R4012080	-	R413013819[405]	-	R457013824	R457013825
R441713846[405]	60mm	R4212078	R4212077	R4012080	-	R413013820[406]	-	R457013824	R457013825
R44145280[405]	54mm	R4212249	R4212248	-	R4012250[363]	-	-	R457013827	R457013851
R44145280[405]	54mm	R4212249	R4212248	-	R4012250[363]	-	-	R457013847	-
R44145255[394]	60mm	R4212084	R4212083	R4012080	-	R413013817[401]	-	R457013824	R457013825
R44145255[394]	60mm	R4212084	R4212083	R4012080	-	R413013829[403]	-	R457013824	R457013825
R44145255[394]	60mm	R4212084	R4212083	R4012080	-	R413013830[404]	-	R457013824	R457013825
R44145255[394]	60mm	R4212084	R4212083	R4012080	-	R413013818[402]	-	R457013824	R457013825
R44145255[394]	60mm	R4212084	R4212083	R4012080	-	R413013820[406]	-	R457013824	R457013825
R44145255[394]	60mm	R4212084	R4212083	R4012080	-	R413013819[405]	-	R457013824	R457013825
R44145258[405]	48mm	R4212244	R4212243	R4012246	R4012245[363]	-	-	R457013826	-
R44145258[405]	48mm	R4212244	R4212243	R4012246	R4012245[363]	-	-	R457013827	R457013828
R441713815	60mm	R4212078	R4212077	R4012080	-	R413013818[402]	-	R457013840	R457013841
R441713815	60mm	R4212078	R4212077	R4012080	-	R413013830[404]	-	R457013840	R457013841
R441713815	60mm	R4212078	R4212077	R4012080	-	R413013829[403]	-	R457013840	R457013841
R441713815	60mm	R4212078	R4212077	R4012080	-	R413013817[401]	-	R457013840	R457013841
R441713815	60mm	R4212078	R4212077	R4012080	-	R413013820[406]	-	R457013840	R457013841
R441713815	60mm	R4212078	R4212077	R4012080	-	R413013819[405]	-	R457013840	R457013841
R44145280[405]	54mm	R4212249	R4212248	-	R4012250[363]	-	-	R457013855	-
R44145280[405]	54mm	R4212249	R4212248	-	R4012250[363]	-	-	R457013827	R457013851
R44145258[405]	48mm	R4212244	R4212243	R4012246	R4012245[363]	-	-	R457013827	R457013828
R44145258[405]	48mm	R4212244	R4212243	R4012246	R4012245[363]	-	-	R457013842	-
R441713839	60mm	R4212084	R4212083	R4012080	-	R413013819[405]	-	R457013840	R457013841
R441713839	60mm	R4212084	R4212083	R4012080	-	R413013820[406]	-	R457013840	R457013841
R441713839	60mm	R4212084	R4212083	R4012080	-	R413013817[401]	-	R457013840	R457013841
R441713839	60mm	R4212084	R4212083	R4012080	-	R413013830[404]	-	R457013840	R457013841
R441713839	60mm	R4212084	R4212083	R4012080	-	R413013818[402]	-	R457013840	R457013841
R441713839	60mm	R4212084	R4212083	R4012080	-	R413013829[403]	-	R457013840	R457013841
R441713813	60mm	R4212084	R4212083	R4012080	-	R413013829[403]	-	R457013840	R457013841
R441713813	60mm	R4212084	R4212083	R4012080	-	R413013818[402]	-	R457013840	R457013841
R441713813	60mm	R4212084	R4212083	R4012080	-	R413013819[405]	-	R457013840	R457013841
R441713813	60mm	R4212084	R4212083	R4012080	-	R413013830[404]	-	R457013840	R457013841
R441713813	60mm	R4212084	R4212083	R4012080	-	R413013817[401]	-	R457013840	R457013841
R441713813	60mm	R4212084	R4212083	R4012080	-	R413013820[406]	-	R457013840	R457013841
R441713846[405]	60mm	R4212078	R4212077	R4012080	-	R413013820[406]	-	R457013824	R457013825
R441713846[405]	60mm	R4212078	R4212077	R4012080	-	R413013830[404]	-	R457013824	R457013825
R441713846[405]	60mm	R4212078	R4212077	R4012080	-	R413013819[405]	-	R457013824	R457013825
R441713846[405]	60mm	R4212078	R4212077	R4012080	-	R413013818[402]	-	R457013824	R457013825
R441713846[405]	60mm	R4212078	R4212077	R4012080	-	R413013817[401]	-	R457013824	R457013825
R441713846[405]	60mm	R4212078	R4212077	R4012080	-	R413013829[403]	-	R457013824	R457013825

MAKE MODEL YEAR AXLE CODE AXLE WEIGHT	AXLE & BRK. TYPE	BRK. MFG.	BRAKE SIZE	FMSI	MERITOR DISC PAD OR BRAKE SHOE	MERITOR GUIDE PIN OR RETURN SPRING KIT	MERITOR CALIPER HWD. KIT OR RETURN SPRING KIT	MERITOR ADJUSTER KIT (LEFT WHEEL)	MERITOR ADJUSTER KIT (RIGHT WHEEL)
FORD(Cont.)									
F350 SUPERDUTY SERIES PICKUP-1TON (Cont.)									
2005									
	Rd	TRW		7973 - D1067	MD1067	N/R	R4012252	N/R	N/R
	Rd	TRW		7973 - D1067	MD1067	N/R	R4012252	N/R	N/R
2 X 4, SRW	Fd	TRW		7974 - D1069	MD1069	N/R	R4012081	N/R	N/R
	Fd	TRW		7974 - D1069	MD1069	N/R	R4012081	N/R	N/R
	Fd	TRW		7974 - D1069	MD1069	N/R	R4012081	N/R	N/R
	Fd	TRW		7974 - D1069	MD1069	N/R	R4012081	N/R	N/R
	Fd	TRW		7974 - D1069	MD1069	N/R	R4012081	N/R	N/R
	Fd	TRW		7974 - D1069	MD1069	N/R	R4012081	N/R	N/R
	Rd	TRW		7973 - D1068	MD1068	N/R	R4012247	N/R	N/R
	Rd	TRW		7973 - D1068	MD1068	N/R	R4012247	N/R	N/R
4 X 4 DRW	Fd	TRW		7974 - D1069	MD1069	N/R	R4012081	N/R	N/R
	Fd	TRW		7974 - D1069	MD1069	N/R	R4012081	N/R	N/R
	Fd	TRW		7974 - D1069	MD1069	N/R	R4012081	N/R	N/R
	Fd	TRW		7974 - D1069	MD1069	N/R	R4012081	N/R	N/R
	Fd	TRW		7974 - D1069	MD1069	N/R	R4012081	N/R	N/R
	Fd	TRW		7974 - D1069	MD1069	N/R	R4012081	N/R	N/R
	Rd	TRW		7973 - D1067	MD1067	N/R	R4012252	N/R	N/R
	Rd	TRW		7973 - D1067	MD1067	N/R	R4012252	N/R	N/R
4 X 4 SRW	Rd	TRW		7973 - D1068	MD1068	N/R	R4012247	N/R	N/R
	Rd	TRW		7973 - D1068	MD1068	N/R	R4012247	N/R	N/R
4 X 4 SRW Except Harley Davidson Package	Fd	TRW		7974 - D1069	MD1069	N/R	R4012081	N/R	N/R
	Fd	TRW		7974 - D1069	MD1069	N/R	R4012081	N/R	N/R
	Fd	TRW		7974 - D1069	MD1069	N/R	R4012081	N/R	N/R
	Fd	TRW		7974 - D1069	MD1069	N/R	R4012081	N/R	N/R
	Fd	TRW		7974 - D1069	MD1069	N/R	R4012081	N/R	N/R
	Fd	TRW		7974 - D1069	MD1069	N/R	R4012081	N/R	N/R
4 X 4 SRW Harley Davidson Package	Fd	TRW		7974 - D1069	MD1069	N/R	R4012081	N/R	N/R
	Fd	TRW		7974 - D1069	MD1069	N/R	R4012081	N/R	N/R
	Fd	TRW		7974 - D1069	MD1069	N/R	R4012081	N/R	N/R
	Fd	TRW		7974 - D1069	MD1069	N/R	R4012081	N/R	N/R
	Fd	TRW		7974 - D1069	MD1069	N/R	R4012081	N/R	N/R
	Fd	TRW		7974 - D1069	MD1069	N/R	R4012081	N/R	N/R
2004									
2 x 4, 4 Wheel ABS, DRW Twin I-Beam	Fd	TRW		7625 - D824	MVD824	NR	NR	NR	NR
	Fd	TRW		7625 - D824	MVD824	NR	NR	NR	NR
2 x 4, 4 Wheel ABS, SRW	Fd	TRW		7625 - D824	MVD824	NR	NR	NR	NR
2 x 4, Rear Wheel ABS, SRW	Fd	TRW		7625 - D824	MVD824	NR	NR	NR	NR
	Fd	TRW		7625 - D824	MVD824	NR	NR	NR	NR
	Fd	TRW		7625 - D824	MVD824	NR	NR	NR	NR
4 x 4, From 3/22/99 Except Mono Beam Front Axle	Fd	TRW		7625 - D824	MVD824	NR	NR	NR	NR
	Fd	TRW		7625 - D824	MVD824	NR	NR	NR	NR
4 x 4, From 3/22/99 Mono Beam Front Axle	Fd	TRW		7625 - D824	MVD824	NR	NR	NR	NR
	Fd	TRW		7625 - D824	MVD824	NR	NR	NR	NR
4 x 4, Up to 3/22/99 Except Mono Beam Front Axle	Fd	TRW		7625 - D824	MVD824	NR	NR	NR	NR
	Fd	TRW		7625 - D824	MVD824	NR	NR	NR	NR
4 x 4, Up to 3/22/99 Mono Beam Front Axle	Fd	TRW		7625 - D824	MVD824	NR	NR	NR	NR
	Fd	TRW		7625 - D824	MVD824	NR	NR	NR	NR
DRW	Rd	TRW		7626 - D757	MVD757	NR	NR	NR	NR
SRW	Rd	TRW		7626 - D757	MVD757	NR	NR	NR	NR
2003									
2 x 4, 4 Wheel ABS, DRW Twin I-Beam	Fd	TRW		7625 - D824	MVD824	NR	NR	NR	NR
	Fd	TRW		7625 - D824	MVD824	NR	NR	NR	NR
2 x 4, 4 Wheel ABS, SRW	Fd	TRW		7625 - D824	MVD824	NR	NR	NR	NR

217 - Power Brakes Except Speed Control
223 - Power Brakes, Speed Control
363 - Piston includes Boots and Seals
371 - With Manual Locking Hubs
372 - With Auro Locking Hubs
373 - 2 x 4 with 4 wheel ABS
374 - 2 x 4 with Rear wheel ABS
375 - Right and Left interchangeable depending on clock mounting of unit
394 - 8 Stud Rotor and Hub one piece Assembly

MERITOR DRUM OR ROTOR NO.	CALIPER OR CYLINDER BORE SIZE	MERITOR CALIPER OR WHEEL CYLINDER (LEFT)	MERITOR CALIPER OR WHEEL CYLINDER (RIGHT)	MERITOR CALIPER OR WHEEL CYLINDER REPAIR KIT	MERITOR CALIPER PISTON	MERITOR MASTER CYLINDER	MERITOR MASTER CYLINDER KIT	MERITOR BRAKE HOSE (LEFT)	MERITOR BRAKE HOSE (RIGHT)
									FORD(Cont.)
									F350 SUPERDUTY SERIES PICKUP-1TON (Cont.)
R44145280[405]	54mm	R4212249	R4212248	-	R4012250[363]	-	-	R457013847	-
R44145280[405]	54mm	R4212249	R4212248	-	R4012250[363]	-	-	R457013827	R457013851
R44145255[394]	60mm	R4212084	R4212083	R4012080	-	R413013818[402]	-	R457013824	R457013825
R44145255[394]	60mm	R4212084	R4212083	R4012080	-	R413013817[401]	-	R457013824	R457013825
R44145255[394]	60mm	R4212084	R4212083	R4012080	-	R413013829[403]	-	R457013824	R457013825
R44145255[394]	60mm	R4212084	R4212083	R4012080	-	R413013830[404]	-	R457013824	R457013825
R44145255[394]	60mm	R4212084	R4212083	R4012080	-	R413013819[405]	-	R457013824	R457013825
R44145255[394]	60mm	R4212084	R4212083	R4012080	-	R413013820[406]	-	R457013824	R457013825
R44145258[405]	48mm	R4212244	R4212243	R4012246	R4012245[363]	-	-	R457013826	-
R44145258[405]	48mm	R4212244	R4212243	R4012246	R4012245[363]	-	-	R457013827	R457013828
R441713815	60mm	R4212078	R4212077	R4012080	-	R413013819[405]	-	R457013840	R457013841
R441713815	60mm	R4212078	R4212077	R4012080	-	R413013817[401]	-	R457013840	R457013841
R441713815	60mm	R4212078	R4212077	R4012080	-	R413013820[406]	-	R457013840	R457013841
R441713815	60mm	R4212078	R4212077	R4012080	-	R413013829[403]	-	R457013840	R457013841
R441713815	60mm	R4212078	R4212077	R4012080	-	R413013818[402]	-	R457013840	R457013841
R441713815	60mm	R4212078	R4212077	R4012080	-	R413013830[404]	-	R457013840	R457013841
R44145280[405]	54mm	R4212249	R4212248	-	R4012250[363]	-	-	R457013855	-
R44145280[405]	54mm	R4212249	R4212248	-	R4012250[363]	-	-	R457013827	R457013851
R44145258[405]	48mm	R4212244	R4212243	R4012246	R4012245[363]	-	-	R457013827	R457013828
R44145258[405]	48mm	R4212244	R4212243	R4012246	R4012245[363]	-	-	R457013842	-
R441713839	60mm	R4212084	R4212083	R4012080	-	R413013820[406]	-	R457013840	R457013841
R441713839	60mm	R4212084	R4212083	R4012080	-	R413013819[405]	-	R457013840	R457013841
R441713839	60mm	R4212084	R4212083	R4012080	-	R413013830[404]	-	R457013840	R457013841
R441713839	60mm	R4212084	R4212083	R4012080	-	R413013817[401]	-	R457013840	R457013841
R441713839	60mm	R4212084	R4212083	R4012080	-	R413013818[402]	-	R457013840	R457013841
R441713839	60mm	R4212084	R4212083	R4012080	-	R413013829[403]	-	R457013840	R457013841
R441713813	60mm	R4212084	R4212083	R4012080	-	R413013829[403]	-	R457013840	R457013841
R441713813	60mm	R4212084	R4212083	R4012080	-	R413013817[401]	-	R457013840	R457013841
R441713813	60mm	R4212084	R4212083	R4012080	-	R413013830[404]	-	R457013840	R457013841
R441713813	60mm	R4212084	R4212083	R4012080	-	R413013818[402]	-	R457013840	R457013841
R441713813	60mm	R4212084	R4212083	R4012080	-	R413013819[405]	-	R457013840	R457013841
R441713813	60mm	R4212084	R4212083	R4012080	-	R413013820[406]	-	R457013840	R457013841
R44145267[394]	56mm	R4255749	R4255748	R4012261	R4012260[363]	R4113649[223]	-	R4578992	R4578991
R44145267[394]	56mm	R4255749	R4255748	R4012261	R4012260[363]	R4113648[217]	-	R4578992	R4578991
R44145255[394]	56mm	R4255749	R4255748	R4012261	R4012260[363]	R4113648[217]	-	R4578992	R4578991
R44145255[394]	56mm	R4255749	R4255748	R4012261	R4012260[363]	R4113649[223]	-	R4578876	R4578991
R44145256[394]	56mm	R4255749	R4255748	R4012261	R4012260[363]	R4113648[217]	-	R4578992	R4578991
R44145256[394]	56mm	R4255749	R4255748	R4012261	R4012260[363]	R4113649[223]	-	R4578992	R4578991
R44145274[405]	56mm	R4255749	R4255748	R4012261	R4012260[363]	R4113648[217]	-	R4578997[372]	R4578996
R44145274[405]	56mm	R4255749	R4255748	R4012261	R4012260[363]	R4113649[223]	-	R4578994[371]	R4578995
R4466924	56mm	R4255749	R4255748	R4012261	R4012260[363]	R4113648[217]	-	R4578997[372]	R4578996
R4466924	56mm	R4255749	R4255748	R4012261	R4012260[363]	R4113649[223]	-	R4578994[371]	R4578995
R44145245[405]	56mm	R4255749	R4255748	R4012261	R4012260[363]	R4113649[223]	-	R4578993[371]	R4578995
R44145245[405]	56mm	R4255749	R4255748	R4012261	R4012260[363]	R4113648[217]	-	R4578994[372]	R4578996
R44145257[405]	56mm	R4255749	R4255748	R4012261	R4012260[363]	R4113648[217]	-	R4578802[373]	R4512482
R44145257[405]	56mm	R4255749	R4255748	R4012261	R4012260[363]	R4113649[223]	-	R4512481[374]	R4512482
R44145280[405]	45mm	R4255858	R4255857[375]	R4012040	R4012039[363]	-	-	-	-
R44145258[405]	45mm	R4255858	R4255857[375]	R4012040	R4012039[363]	-	-	-	-
R44145267[394]	56mm	R4255749	R4255748	R4012261	R4012260[363]	R4113649[223]	-	R4578992	R4578991
R44145267[394]	56mm	R4255749	R4255748	R4012261	R4012260[363]	R4113648[217]	-	R4578992	R4578991
R44145255[394]	56mm	R4255749	R4255748	R4012261	R4012260[363]	R4113648[217]	-	R4578992	R4578991

401 - Gas Engine w/o Brake Control Valve
402 - Gas Engine With Integrated Brake Control Valve
403 - To 7/19/05 Diesel Engine w/o Speed Control
404 - To 7/19/05 Diesel Engine with Speed Control
405 - From 7/19/05 Diesel Engine w/o Brake Control Valve
405 - Rotor Only
406 - From 7/19/05 Diesel Engine with Integrated Brake Control Valve

MAKE MODEL YEAR AXLE CODE AXLE WEIGHT	AXLE & BRK. TYPE	BRK. MFG.	BRAKE SIZE	FMSI	MERITOR DISC PAD OR BRAKE SHOE	MERITOR GUIDE PIN OR RETURN SPRING KIT	MERITOR CALIPER HWD. KIT OR RETURN SPRING KIT	MERITOR ADJUSTER KIT (LEFT WHEEL)	MERITOR ADJUSTER KIT (RIGHT WHEEL)
FORD(Cont.)									
F350 SUPERDUTY SERIES PICKUP-1TON (Cont.)									
2003 2 x 4, Rear Wheel ABS,									
SRW	Fd	TRW		7625 - D824	MVD824	NR	NR	NR	NR
	Fd	TRW		7625 - D824	MVD824	NR	NR	NR	NR
	Fd	TRW		7625 - D824	MVD824	NR	NR	NR	NR
4 x 4, From 3/22/99 Except Mono Beam Front									
Axle	Fd	TRW		7625 - D824	MVD824	NR	NR	NR	NR
	Fd	TRW		7625 - D824	MVD824	NR	NR	NR	NR
4 x 4, From 3/22/99 Mono Beam Front Axle	Fd	TRW		7625 - D824	MVD824	NR	NR	NR	NR
	Fd	TRW		7625 - D824	MVD824	NR	NR	NR	NR
4 x 4, Up to 3/22/99 Except Mono Beam Front									
Axle	Fd	TRW		7625 - D824	MVD824	NR	NR	NR	NR
	Fd	TRW		7625 - D824	MVD824	NR	NR	NR	NR
4 x 4, Up to 3/22/99 Mono Beam Front Axle	Fd	TRW		7625 - D824	MVD824	NR	NR	NR	NR
	Fd	TRW		7625 - D824	MVD824	NR	NR	NR	NR
DRW	Rd	TRW		7626 - D757	MVD757	NR	NR	NR	NR
SRW	Rd	TRW		7626 - D757	MVD757	NR	NR	NR	NR
2002 2 x 4, 4 Wheel ABS, DRW									
Twin I-Beam	Fd	TRW		7625 - D824	MVD824	NR	NR	NR	NR
	Fd	TRW		7625 - D824	MVD824	NR	NR	NR	NR
2 x 4, 4 Wheel ABS, SRW	Fd	TRW		7625 - D824	MVD824	NR	NR	NR	NR
2 x 4, Rear Wheel ABS,									
SRW	Fd	TRW		7625 - D824	MVD824	NR	NR	NR	NR
	Fd	TRW		7625 - D824	MVD824	NR	NR	NR	NR
	Fd	TRW		7625 - D824	MVD824	NR	NR	NR	NR
4 x 4, From 3/22/99 Except Mono Beam Front									
Axle	Fd	TRW		7625 - D824	MVD824	NR	NR	NR	NR
	Fd	TRW		7625 - D824	MVD824	NR	NR	NR	NR
4 x 4, From 3/22/99 Mono Beam Front Axle	Fd	TRW		7625 - D824	MVD824	NR	NR	NR	NR
	Fd	TRW		7625 - D824	MVD824	NR	NR	NR	NR
4 x 4, Up to 3/22/99 Except Mono Beam Front									
Axle	Fd	TRW		7625 - D824	MVD824	NR	NR	NR	NR
	Fd	TRW		7625 - D824	MVD824	NR	NR	NR	NR
4 x 4, Up to 3/22/99 Mono Beam Front Axle	Fd	TRW		7625 - D824	MVD824	NR	NR	NR	NR
	Fd	TRW		7625 - D824	MVD824	NR	NR	NR	NR
DRW	Rd	TRW		7626 - D757	MVD757	NR	NR	NR	NR
SRW	Rd	TRW		7626 - D757	MVD757	NR	NR	NR	NR
2001 2 x 4, 4 Wheel ABS, DRW									
Twin I-Beam	Fd	TRW		7625 - D824	MVD824	NR	NR	NR	NR
	Fd	TRW		7625 - D824	MVD824	NR	NR	NR	NR
2 x 4, 4 Wheel ABS, SRW	Fd	TRW		7625 - D824	MVD824	NR	NR	NR	NR
2 x 4, Rear Wheel ABS,									
SRW	Fd	TRW		7625 - D824	MVD824	NR	NR	NR	NR
	Fd	TRW		7625 - D824	MVD824	NR	NR	NR	NR
	Fd	TRW		7625 - D824	MVD824	NR	NR	NR	NR
4 x 4, From 3/22/99 Except Mono Beam Front									
Axle	Fd	TRW		7625 - D824	MVD824	NR	NR	NR	NR
	Fd	TRW		7625 - D824	MVD824	NR	NR	NR	NR
4 x 4, From 3/22/99 Mono Beam Front Axle	Fd	TRW		7625 - D824	MVD824	NR	NR	NR	NR
	Fd	TRW		7625 - D824	MVD824	NR	NR	NR	NR
4 x 4, Up to 3/22/99 Except Mono Beam Front									
Axle	Fd	TRW		7625 - D824	MVD824	NR	NR	NR	NR

217 - Power Brakes Except Speed Control
223 - Power Brakes, Speed Control
363 - Piston includes Boots and Seals
371 - With Manual Locking Hubs
372 - With Auro Locking Hubs
373 - 2 x 4 with 4 wheel ABS
374 - 2 x 4 with Rear wheel ABS
375 - Right and Left interchangeable depending on clock mounting of unit
394 - 8 Stud Rotor and Hub one piece Assembly

MERITOR DRUM OR ROTOR NO.	CALIPER OR CYLINDER BORE SIZE	MERITOR CALIPER OR WHEEL CYLINDER (LEFT)	MERITOR CALIPER OR WHEEL CYLINDER (RIGHT)	MERITOR CALIPER OR WHEEL CYLINDER REPAIR KIT	MERITOR CALIPER PISTON	MERITOR MASTER CYLINDER	MERITOR MASTER CYLINDER KIT	MERITOR BRAKE HOSE (LEFT)	MERITOR BRAKE HOSE (RIGHT)
									FORD(Cont.)
									F350 SUPERDUTY SERIES PICKUP-1TON (Cont.)
R44145255[394]	56mm	R4255749	R4255748	R4012261	R4012260[363]	R4113649[223]	-	R4578876	R4578991
R44145256[394]	56mm	R4255749	R4255748	R4012261	R4012260[363]	R4113648[217]	-	R4578992	R4578991
R44145256[394]	56mm	R4255749	R4255748	R4012261	R4012260[363]	R4113649[223]	-	R4578992	R4578991
R44145274[405]	56mm	R4255749	R4255748	R4012261	R4012260[363]	R4113649[223]	-	R4578994[371]	R4578995
R44145274[405]	56mm	R4255749	R4255748	R4012261	R4012260[363]	R4113648[217]	-	R4578997[372]	R4578996
R4466924	56mm	R4255749	R4255748	R4012261	R4012260[363]	R4113648[217]	-	R4578997[372]	R4578996
R4466924	56mm	R4255749	R4255748	R4012261	R4012260[363]	R4113649[223]	-	R4578994[371]	R4578995
R44145245[405]	56mm	R4255749	R4255748	R4012261	R4012260[363]	R4113649[223]	-	R4578993[371]	R4578995
R44145245[405]	56mm	R4255749	R4255748	R4012261	R4012260[363]	R4113648[217]	-	R4578994[372]	R4578996
R44145257[405]	56mm	R4255749	R4255748	R4012261	R4012260[363]	R4113648[217]	-	R4578802[373]	R4512482
R44145257[405]	56mm	R4255749	R4255748	R4012261	R4012260[363]	R4113649[223]	-	R4512481[374]	R4512482
R44145280[405]	45mm	R4255858	R4255857[375]	R4012040	R4012039[363]	-	-	-	-
R44145258[405]	45mm	R4255858	R4255857[375]	R4012040	R4012039[363]	-	-	-	-
R44145267[394]	56mm	R4255749	R4255748	R4012261	R4012260[363]	R4113648[217]	-	R4578992	R4578991
R44145267[394]	56mm	R4255749	R4255748	R4012261	R4012260[363]	R4113649[223]	-	R4578992	R4578991
R44145255[394]	56mm	R4255749	R4255748	R4012261	R4012260[363]	R4113648[217]	-	R4578992	R4578991
R44145255[394]	56mm	R4255749	R4255748	R4012261	R4012260[363]	R4113649[223]	-	R4578876	R4578991
R44145256[394]	56mm	R4255749	R4255748	R4012261	R4012260[363]	R4113649[223]	-	R4578992	R4578991
R44145256[394]	56mm	R4255749	R4255748	R4012261	R4012260[363]	R4113648[217]	-	R4578992	R4578991
R44145274[405]	56mm	R4255749	R4255748	R4012261	R4012260[363]	R4113649[223]	-	R4578994[371]	R4578995
R44145274[405]	56mm	R4255749	R4255748	R4012261	R4012260[363]	R4113648[217]	-	R4578997[372]	R4578996
R4466924	56mm	R4255749	R4255748	R4012261	R4012260[363]	R4113649[223]	-	R4578994[371]	R4578995
R4466924	56mm	R4255749	R4255748	R4012261	R4012260[363]	R4113648[217]	-	R4578997[372]	R4578996
R44145245[405]	56mm	R4255749	R4255748	R4012261	R4012260[363]	R4113649[223]	-	R4578993[371]	R4578995
R44145245[405]	56mm	R4255749	R4255748	R4012261	R4012260[363]	R4113648[217]	-	R4578994[372]	R4578996
R44145257[405]	56mm	R4255749	R4255748	R4012261	R4012260[363]	R4113649[223]	-	R4512481[374]	R4512482
R44145257[405]	56mm	R4255749	R4255748	R4012261	R4012260[363]	R4113648[217]	-	R4578802[373]	R4512482
R44145280[405]	45mm	R4255858	R4255857[375]	R4012040	R4012039[363]	-	-	-	-
R44145258[405]	45mm	R4255858	R4255857[375]	R4012040	R4012039[363]	-	-	-	-
R44145267[394]	56mm	R4255749	R4255748	R4012261	R4012260[363]	R4113648[217]	-	R4578992	R4578991
R44145267[394]	56mm	R4255749	R4255748	R4012261	R4012260[363]	R4113649[223]	-	R4578992	R4578991
R44145255[394]	56mm	R4255749	R4255748	R4012261	R4012260[363]	R4113648[217]	-	R4578992	R4578991
R44145255[394]	56mm	R4255749	R4255748	R4012261	R4012260[363]	R4113649[223]	-	R4578876	R4578991
R44145256[394]	56mm	R4255749	R4255748	R4012261	R4012260[363]	R4113649[223]	-	R4578992	R4578991
R44145256[394]	56mm	R4255749	R4255748	R4012261	R4012260[363]	R4113648[217]	-	R4578992	R4578991
R44145274[405]	56mm	R4255749	R4255748	R4012261	R4012260[363]	R4113648[217]	-	R4578997[372]	R4578996
R44145274[405]	56mm	R4255749	R4255748	R4012261	R4012260[363]	R4113649[223]	-	R4578994[371]	R4578995
R4466924	56mm	R4255749	R4255748	R4012261	R4012260[363]	R4113649[223]	-	R4578994[371]	R4578995
R4466924	56mm	R4255749	R4255748	R4012261	R4012260[363]	R4113648[217]	-	R4578997[372]	R4578996
R44145245[405]	56mm	R4255749	R4255748	R4012261	R4012260[363]	R4113648[217]	-	R4578994[372]	R4578996

405 - Rotor Only

MAKE MODEL YEAR AXLE CODE AXLE WEIGHT	AXLE & BRK. TYPE	BRK. MFG.	BRAKE SIZE	FMSI	MERITOR DISC PAD OR BRAKE SHOE	MERITOR GUIDE PIN OR RETURN SPRING KIT	MERITOR CALIPER HWD. KIT OR RETURN SPRING KIT	MERITOR ADJUSTER KIT (LEFT WHEEL)	MERITOR ADJUSTER KIT (RIGHT WHEEL)
FORD(Cont.)									
F350 SUPERDUTY SERIES PICKUP-1TON (Cont.)									
2001									
	Fd	TRW		7625 - D824	MVD824	NR	NR	NR	NR
4 x 4, Up to 3/22/99									
Mono Beam Front Axle	Fd	TRW		7625 - D824	MVD824	NR	NR	NR	NR
	Fd	TRW		7625 - D824	MVD824	NR	NR	NR	NR
DRW	Rd	TRW		7626 - D757	MVD757	NR	NR	NR	NR
SRW	Rd	TRW		7626 - D757	MVD757	NR	NR	NR	NR
2000									
2 x 4, 4 Wheel ABS, DRW									
Twin I-Beam	Fd	TRW		7625 - D824	MVD824	NR	NR	NR	NR
	Fd	TRW		7625 - D824	MVD824	NR	NR	NR	NR
2 x 4, 4 Wheel ABS, SRW	Fd	TRW		7625 - D824	MVD824	NR	NR	NR	NR
2 x 4, Rear Wheel ABS,									
SRW	Fd	TRW		7625 - D824	MVD824	NR	NR	NR	NR
	Fd	TRW		7625 - D824	MVD824	NR	NR	NR	NR
	Fd	TRW		7625 - D824	MVD824	NR	NR	NR	NR
4 x 4, From 3/22/99									
Except Mono Beam Front									
Axle	Fd	TRW		7625 - D824	MVD824	NR	NR	NR	NR
	Fd	TRW		7625 - D824	MVD824	NR	NR	NR	NR
4 x 4, From 3/22/99									
Mono Beam Front Axle	Fd	TRW		7625 - D824	MVD824	NR	NR	NR	NR
	Fd	TRW		7625 - D824	MVD824	NR	NR	NR	NR
4 x 4, Up to 3/22/99									
Except Mono Beam Front									
Axle	Fd	TRW		7625 - D824	MVD824	NR	NR	NR	NR
	Fd	TRW		7625 - D824	MVD824	NR	NR	NR	NR
4 x 4, Up to 3/22/99									
Mono Beam Front Axle	Fd	TRW		7625 - D824	MVD824	NR	NR	NR	NR
	Fd	TRW		7625 - D824	MVD824	NR	NR	NR	NR
DRW	Rd	TRW		7626 - D757	MVD757	NR	NR	NR	NR
SRW	Rd	TRW		7626 - D757	MVD757	NR	NR	NR	NR
1999									
2 x 4, 4 Wheel ABS, DRW									
Twin I-Beam	Fd	TRW		7625 - D824	MVD824	NR	NR	NR	NR
	Fd	TRW		7625 - D824	MVD824	NR	NR	NR	NR
2 x 4, 4 Wheel ABS, SRW	Fd	TRW		7625 - D824	MVD824	NR	NR	NR	NR
2 x 4, Rear Wheel ABS,									
SRW	Fd	TRW		7625 - D824	MVD824	NR	NR	NR	NR
	Fd	TRW		7625 - D824	MVD824	NR	NR	NR	NR
	Fd	TRW		7625 - D824	MVD824	NR	NR	NR	NR
4 x 4, From 3/22/99									
Except Mono Beam Front									
Axle	Fd	TRW		7625 - D824	MVD824	NR	NR	NR	NR
	Fd	TRW		7625 - D824	MVD824	NR	NR	NR	NR
4 x 4, From 3/22/99									
Mono Beam Front Axle	Fd	TRW		7625 - D824	MVD824	NR	NR	NR	NR
	Fd	TRW		7625 - D824	MVD824	NR	NR	NR	NR
4 x 4, Up to 3/22/99									
Except Mono Beam Front									
Axle	Fd	TRW		7625 - D824	MVD824	NR	NR	NR	NR
	Fd	TRW		7625 - D824	MVD824	NR	NR	NR	NR
4 x 4, Up to 3/22/99									
Mono Beam Front Axle	Fd	TRW		7625 - D824	MVD824	NR	NR	NR	NR
	Fd	TRW		7625 - D824	MVD824	NR	NR	NR	NR
DRW	Rd	TRW		7626 - D757	MVD757	NR	NR	NR	NR
SRW	Rd	TRW		7626 - D757	MVD757	NR	NR	NR	NR
F350 SUPERDUTY SERIES STRIPPED CHASSIS-1TON									
2008									
2 x 4, DRW 5.4L & 6.8L Gas									
Engine and 6.0L Diesel									
Engine	Rd	TRW		7974 - D1069	MD1069	N/R	R4012081	N/R	N/R
	Rd	TRW		7974 - D1069	MD1069	N/R	R4012081	N/R	N/R
2 x 4, SRW	Rd	TRW		7973 - D1068	MD1068	N/R	R4012247	N/R	N/R

217 - Power Brakes Except Speed Control
223 - Power Brakes, Speed Control
363 - Piston includes Boots and Seals
371 - With Manual Locking Hubs
372 - With Auro Locking Hubs
373 - 2 x 4 with 4 wheel ABS
374 - 2 x 4 with Rear wheel ABS
375 - Right and Left interchangeable depending on clock mounting of unit
394 - 8 Stud Rotor and Hub one piece Assembly

MERITOR DRUM OR ROTOR NO.	CALIPER OR CYLINDER BORE SIZE	MERITOR CALIPER OR WHEEL CYLINDER (LEFT)	MERITOR CALIPER OR WHEEL CYLINDER (RIGHT)	MERITOR CALIPER OR WHEEL CYLINDER REPAIR KIT	MERITOR CALIPER PISTON	MERITOR MASTER CYLINDER	MERITOR MASTER CYLINDER KIT	MERITOR BRAKE HOSE (LEFT)	MERITOR BRAKE HOSE (RIGHT)
									FORD(Cont.)
									F350 SUPERDUTY SERIES PICKUP-1TON (Cont.)
R44145245[405]	56mm	R4255749	R4255748	R4012261	R4012260[363]	R4113649[223]	-	R4578993[371]	R4578995
R44145257[405]	56mm	R4255749	R4255748	R4012261	R4012260[363]	R4113648[217]	-	R4578802[373]	R4512482
R44145257[405]	56mm	R4255749	R4255748	R4012261	R4012260[363]	R4113649[223]	-	R4512481[374]	R4512482
R44145280[405]	45mm	R4255858	R4255857[375]	R4012040	R4012039[363]	-	-	-	-
R44145258[405]	45mm	R4255858	R4255857[375]	R4012040	R4012039[363]	-	-	-	-
R44145267[394]	56mm	R4255749	R4255748	R4012261	R4012260[363]	R4113649[223]	-	R4578992	R4578991
R44145267[394]	56mm	R4255749	R4255748	R4012261	R4012260[363]	R4113648[217]	-	R4578992	R4578991
R44145255[394]	56mm	R4255749	R4255748	R4012261	R4012260[363]	R4113648[217]	-	R4578992	R4578991
R44145255[394]	56mm	R4255749	R4255748	R4012261	R4012260[363]	R4113649[223]	-	R4578876	R4578991
R44145256[394]	56mm	R4255749	R4255748	R4012261	R4012260[363]	R4113649[223]	-	R4578992	R4578991
R44145256[394]	56mm	R4255749	R4255748	R4012261	R4012260[363]	R4113648[217]	-	R4578992	R4578991
R44145274[405]	56mm	R4255749	R4255748	R4012261	R4012260[363]	R4113648[217]	-	R4578997[372]	R4578996
R44145274[405]	56mm	R4255749	R4255748	R4012261	R4012260[363]	R4113649[223]	-	R4578994[371]	R4578995
R4466924	56mm	R4255749	R4255748	R4012261	R4012260[363]	R4113648[217]	-	R4578997[372]	R4578996
R4466924	56mm	R4255749	R4255748	R4012261	R4012260[363]	R4113649[223]	-	R4578994[371]	R4578995
R44145245[405]	56mm	R4255749	R4255748	R4012261	R4012260[363]	R4113649[223]	-	R4578993[371]	R4578995
R44145245[405]	56mm	R4255749	R4255748	R4012261	R4012260[363]	R4113648[217]	-	R4578994[372]	R4578996
R44145257[405]	56mm	R4255749	R4255748	R4012261	R4012260[363]	R4113649[223]	-	R4512481[374]	R4512482
R44145257[405]	56mm	R4255749	R4255748	R4012261	R4012260[363]	R4113648[217]	-	R4578802[373]	R4512482
R44145280[405]	45mm	R4255858	R4255857[375]	R4012040	R4012039[363]	-	-	-	-
R44145258[405]	45mm	R4255858	R4255857[375]	R4012040	R4012039[363]	-	-	-	-
R44145267[394]	56mm	R4255749	R4255748	R4012261	R4012260[363]	R4113648[217]	-	R4578992	R4578991
R44145267[394]	56mm	R4255749	R4255748	R4012261	R4012260[363]	R4113649[223]	-	R4578992	R4578991
R44145255[394]	56mm	R4255749	R4255748	R4012261	R4012260[363]	R4113648[217]	-	R4578992	R4578991
R44145255[394]	56mm	R4255749	R4255748	R4012261	R4012260[363]	R4113649[223]	-	R4578876	R4578991
R44145256[394]	56mm	R4255749	R4255748	R4012261	R4012260[363]	R4113648[217]	-	R4578992	R4578991
R44145256[394]	56mm	R4255749	R4255748	R4012261	R4012260[363]	R4113649[223]	-	R4578992	R4578991
R44145274[405]	56mm	R4255749	R4255748	R4012261	R4012260[363]	R4113648[217]	-	R4578997[372]	R4578996
R44145274[405]	56mm	R4255749	R4255748	R4012261	R4012260[363]	R4113649[223]	-	R4578994[371]	R4578995
R4466924	56mm	R4255749	R4255748	R4012261	R4012260[363]	R4113648[217]	-	R4578997[372]	R4578996
R4466924	56mm	R4255749	R4255748	R4012261	R4012260[363]	R4113649[223]	-	R4578994[371]	R4578995
R44145245[405]	56mm	R4255749	R4255748	R4012261	R4012260[363]	R4113648[217]	-	R4578994[372]	R4578996
R44145245[405]	56mm	R4255749	R4255748	R4012261	R4012260[363]	R4113649[223]	-	R4578993[371]	R4578995
R44145257[405]	56mm	R4255749	R4255748	R4012261	R4012260[363]	R4113649[223]	-	R4512481[374]	R4512482
R44145257[405]	56mm	R4255749	R4255748	R4012261	R4012260[363]	R4113648[217]	-	R4578802[373]	R4512482
R44145280[405]	45mm	R4255858	R4255857[375]	R4012040	R4012039[363]	-	-	-	-
R44145258[405]	45mm	R4255858	R4255857[375]	R4012040	R4012039[363]	-	-	-	-
									F350 SUPERDUTY SERIES STRIPPED CHASSIS-1TON
R44145280[405]	54mm	R4212249	R4212248	-	R4012250	-	-	R457013854	-
R44145280[405]	54mm	R4212249	R4212248	-	R4012250	-	-	R457013848	R457013843
R44145258[405]	48mm	-	-	-	-	-	-	R457013826	-

405 - Rotor Only

MAKE MODEL YEAR AXLE CODE AXLE WEIGHT	AXLE & BRK. TYPE	BRK. MFG.	BRAKE SIZE	FMSI	MERITOR DISC PAD OR BRAKE SHOE	MERITOR GUIDE PIN OR RETURN SPRING KIT	MERITOR CALIPER HWD. KIT OR RETURN SPRING KIT	MERITOR ADJUSTER KIT (LEFT WHEEL)	MERITOR ADJUSTER KIT (RIGHT WHEEL)
FORD(Cont.)									
F350 SUPERDUTY SERIES STRIPPED CHASSIS-1TON (Cont.)									
2008									
	Rd	TRW		7973 - D1068	MD1068	N/R	R4012247	N/R	N/R
2007									
2 x 4, DRW 5.4L Gas									
Engine	Rd	TRW		7973 - D1067	MD1067	N/R	R4012252	N/R	N/R
	Rd	TRW		7973 - D1067	MD1067	N/R	R4012252	N/R	N/R
2 x 4, DRW 6.0L Diesel									
Engine and 6.8L Gas									
Engine	Rd	TRW		7973 - D1067	MD1067	N/R	R4012252	N/R	N/R
	Rd	TRW		7973 - D1067	MD1067	N/R	R4012252	N/R	N/R
2006									
2 x 4, DRW 5.4L Gas									
Engine	Rd	TRW		7973 - D1067	MD1067	N/R	R4012252	N/R	N/R
	Rd	TRW		7973 - D1067	MD1067	N/R	R4012252	N/R	N/R
2 x 4, DRW 6.0L Diesel									
Engine and 6.8L Gas									
Engine	Rd	TRW		7973 - D1067	MD1067	N/R	R4012252	N/R	N/R
	Rd	TRW		7973 - D1067	MD1067	N/R	R4012252	N/R	N/R
4 X 4, DRW 5.4L Gas									
Engine	Rd	TRW		7973 - D1067	MD1067	N/R	R4012252	N/R	N/R
	Rd	TRW		7973 - D1067	MD1067	N/R	R4012252	N/R	N/R
4 X 4, DRW 6.0L Diesel									
Engine and 6.8L Gas									
Engine	Rd	TRW		7973 - D1067	MD1067	N/R	R4012252	N/R	N/R
	Rd	TRW		7973 - D1067	MD1067	N/R	R4012252	N/R	N/R
2005									
2 X 4, DRW 5.4L Gas									
Engine	Rd	TRW		7973 - D1067	MD1067	N/R	R4012252	N/R	N/R
	Rd	TRW		7973 - D1067	MD1067	N/R	R4012252	N/R	N/R
2 X 4, DRW 6.0L Diesel									
Engine and 6.8L Gas									
Engine	Rd	TRW		7973 - D1067	MD1067	N/R	R4012252	N/R	N/R
	Rd	TRW		7973 - D1067	MD1067	N/R	R4012252	N/R	N/R
4 X 4, DRW 5.4L Gas									
Engine	Rd	TRW		7973 - D1067	MD1067	N/R	R4012252	N/R	N/R
	Rd	TRW		7973 - D1067	MD1067	N/R	R4012252	N/R	N/R
4 X 4, DRW 6.0L Diesel									
Engine and 6.8L Gas									
Engine	Rd	TRW		7973 - D1067	MD1067	N/R	R4012252	N/R	N/R
	Rd	TRW		7973 - D1067	MD1067	N/R	R4012252	N/R	N/R
F450									
2005									
4x2 Super duty	Fd	TRW		7972 - D1066	MD1066	-	-	NR	NR
	Fd	TRW		7644 - D777	MD777	R40H15088	R4012268	NR	NR
	Rd	TRW		7644 - D777	MD777	R40H15088	R4012268	NR	NR
4x4 Super duty	Fd	TRW		7644 - D777	MD777	R40H15088	R4012268	NR	NR
	Rd	TRW		7644 - D777	MD777	R40H15088	R4012268	NR	NR
	Rd	TRW		7972 - D1066	MD1066	-	-	NR	NR
2004									
4x2 Super duty	Fd	TRW		7644 - D777	MD777	R40H15088	R4012268	NR	NR
	Rd	TRW		7644 - D777	MD777	R40H15088	R4012268	NR	NR
4x4 Super duty	Fd	TRW		7644 - D777	MD777	R40H15088	R4012268	NR	NR
	Rd	TRW		7644 - D777	MD777	R40H15088	R4012268	NR	NR
2003									
4x2 Super duty	Fd	TRW		7644 - D777	MD777	R40H15088	R4012268	NR	NR
	Fd	TRW		7644 - D777	MD777	R40H15088	R4012268	NR	NR
4x4 Super duty									
3.73, 4.10, 4.30 Gear Ratio	Fd	TRW		7644 - D777	MD777	R40H15088	R4012268	NR	NR
	Fd	TRW		7644 - D777	MD777	R40H15088	R4012268	NR	NR
4x4 Super duty									
4.88, 5.38 Gear Ratio	Fd	TRW		7644 - D777	MD777	R40H15088	R4012268	NR	NR
	Fd	TRW		7644 - D777	MD777	R40H15088	R4012268	NR	NR

217 - Power Brakes Except Speed Control
223 - Power Brakes, Speed Control
363 - Piston includes Boots and Seals
405 - Rotor Only

MERITOR DRUM OR ROTOR NO.	CALIPER OR CYLINDER BORE SIZE	MERITOR CALIPER OR WHEEL CYLINDER (LEFT)	MERITOR CALIPER OR WHEEL CYLINDER (RIGHT)	MERITOR CALIPER OR WHEEL CYLINDER REPAIR KIT	MERITOR CALIPER PISTON	MERITOR MASTER CYLINDER	MERITOR MASTER CYLINDER KIT	MERITOR BRAKE HOSE (LEFT)	MERITOR BRAKE HOSE (RIGHT)
									FORD(Cont.)
									F350 SUPERDUTY SERIES STRIPPED CHASSIS-1TON (Cont.)
R44145258[405]	48mm	-	-	-	-	-	-	R457013827	R457013852
R44145280[405]	54mm	R4212249	R4212248	-	R4012250[363]	-	-	R457013847	-
R44145280[405]	54mm	R4212249	R4212248	-	R4012250[363]	-	-	R457013848	R457013849
R44145280[405]	54mm	R4212249	R4212248	-	R4012250[363]	-	-	R457013847	-
R44145280[405]	54mm	R4212249	R4212248	-	R4012250[363]	-	-	R457013827	R457013850
R44145280[405]	54mm	R4212249	R4212248	-	R4012250[363]	-	-	R457013848	R457013849
R44145280[405]	54mm	R4212249	R4212248	-	R4012250[363]	-	-	R457013847	-
R44145280[405]	54mm	R4212249	R4212248	-	R4012250[363]	-	-	R457013847	-
R44145280[405]	54mm	R4212249	R4212248	-	R4012250[363]	-	-	R457013827	R457013850
R44145280[405]	54mm	R4212249	R4212248	-	R4012250[363]	-	-	R457013848	R457013849
R44145280[405]	54mm	R4212249	R4212248	-	R4012250[363]	-	-	R457013855	-
R44145280[405]	54mm	R4212249	R4212248	-	R4012250[363]	-	-	R457013855	-
R44145280[405]	54mm	R4212249	R4212248	-	R4012250[363]	-	-	R457013827	R457013850
R44145280[405]	54mm	R4212249	R4212248	-	R4012250[363]	-	-	R457013848	R457013849
R44145280[405]	54mm	R4212249	R4212248	-	R4012250[363]	-	-	R457013847	-
R44145280[405]	54mm	R4212249	R4212248	-	R4012250[363]	-	-	R457013847	-
R44145280[405]	54mm	R4212249	R4212248	-	R4012250[363]	-	-	R457013827	R457013850
R44145280[405]	54mm	R4212249	R4212248	-	R4012250[363]	-	-	R457013848	R457013849
R44145280[405]	54mm	R4212249	R4212248	-	R4012250[363]	-	-	R457013855	-
R44145280[405]	54mm	R4212249	R4212248	-	R4012250[363]	-	-	R457013855	-
R44145280[405]	54mm	R4212249	R4212248	-	R4012250[363]	-	-	R457013827	R457013850
									F450
R4466924	60mm	R4212254	R4212253	-	-	-	-	-	-
R4466924	60mm	R4255862	R4255861	-	-	-	-	-	-
R44145325[405]	60mm	R4255862	R4255861	-	-	-	-	-	-
R4466924	60mm	R4255862	R4255861	-	-	-	-	-	-
R44145325[405]	60mm	R4255862	R4255861	-	-	-	-	-	-
R4466924	60mm	R4212254	R4212253	-	-	-	-	-	-
R4466924	60mm	R4255862	R4255861	-	-	-	-	-	-
R44145325[405]	60mm	R4255862	R4255861	-	-	-	-	-	-
R4466924	60mm	R4255862	R4255861	-	-	-	-	-	-
R44145325[405]	60mm	R4255862	R4255861	-	-	-	-	-	-
R4466924	60mm	R4255862	R4255861	-	-	R4113649[223]	N/A	R44145028	R4512419
R4466924	60mm	R4255862	R4255861	-	-	R4113648[217]	N/A	R44145028	R4512419
R44145274[405]	60mm	R4255862	R4255861	-	-	R4113649[223]	N/A	R44145028	R4512419
R44145274[405]	60mm	R4255862	R4255861	-	-	R4113648[217]	N/A	R44145028	R4512419
R4466924	60mm	R4255862	R4255861	-	-	R4113649[223]	N/A	R44145028	R4512419
R4466924	60mm	R4255862	R4255861	-	-	R4113648[217]	N/A	R44145028	R4512419

MAKE MODEL YEAR AXLE CODE AXLE WEIGHT	AXLE & BRK. TYPE	BRK. MFG.	BRAKE SIZE	FMSI	MERITOR DISC PAD OR BRAKE SHOE	MERITOR GUIDE PIN OR RETURN SPRING KIT	MERITOR CALIPER HWD. KIT OR RETURN SPRING KIT	MERITOR ADJUSTER KIT (LEFT WHEEL)	MERITOR ADJUSTER KIT (RIGHT WHEEL)
FORD(Cont.)									
F450(Cont.)									
2003 4x2 Super duty 15,000 - 18,000 lb GVWR	Rd	TRW		7644 - D777	MD777	R40H15088	R4012268	NR	NR
4x4 Super duty 15,000 - 18,000 lb GVWR	Rd	TRW		7644 - D777	MD777	R40H15088	R4012268	NR	NR
4x2 Super duty 20,500 lb GVWR	Rd	TRW		7644 - D777	MD777	R40H15088	R4012268	NR	NR
4x4 Super duty 20,500 lb GVWR	Rd	TRW		7644 - D777	MD777	R40H15088	R4012268	NR	NR
2002 4x2 Super duty	Fd Fd	TRW TRW		7644 - D777 7644 - D777	MD777 MD777	R40H15088 R40H15088	R4012268 R4012268	NR NR	NR NR
4x4 Super duty 3.73, 4.10, 4.30 Gear Ratio	Fd Fd	TRW TRW		7644 - D777 7644 - D777	MD777 MD777	R40H15088 R40H15088	R4012268 R4012268	NR NR	NR NR
4x4 Super duty 4.88, 5.38 Gear Ratio	Fd Fd	TRW TRW		7644 - D777 7644 - D777	MD777 MD777	R40H15088 R40H15088	R4012268 R4012268	NR NR	NR NR
4x2 Super duty 15,000 - 18,000 lb GVWR	Rd	TRW		7644 - D777	MD777	R40H15088	R4012268	NR	NR
4x4 Super duty 15,000 - 18,000 lb GVWR	Rd	TRW		7644 - D777	MD777	R40H15088	R4012268	NR	NR
4x2 Super duty 20,500 lb GVWR	Rd	TRW		7644 - D777	MD777	R40H15088	R4012268	NR	NR
4x4 Super duty 20,500 lb GVWR	Rd	TRW		7644 - D777	MD777	R40H15088	R4012268	NR	NR
2001 4x2 Super duty	Fd Fd	TRW TRW		7644 - D777 7644 - D777	MD777 MD777	R40H15088 R40H15088	R4012268 R4012268	NR NR	NR NR
4x4 Super duty 3.73, 4.10, 4.30 Gear Ratio	Fd Fd	TRW TRW		7644 - D777 7644 - D777	MD777 MD777	R40H15088 R40H15088	R4012268 R4012268	NR NR	NR NR
4x4 Super duty 4.88, 5.38 Gear Ratio	Fd Fd	TRW TRW		7644 - D777 7644 - D777	MD777 MD777	R40H15088 R40H15088	R4012268 R4012268	NR NR	NR NR
4x2 Super duty 15,000 - 18,000 lb GVWR	Rd	TRW		7644 - D777	MD777	R40H15088	R4012268	NR	NR
4x4 Super duty 15,000 - 18,000 lb GVWR	Rd	TRW		7644 - D777	MD777	R40H15088	R4012268	NR	NR
4x2 Super duty 20,500 lb GVWR	Rd	TRW		7644 - D777	MD777	R40H15088	R4012268	NR	NR
4x4 Super duty 20,500 lb GVWR	Rd	TRW		7644 - D777	MD777	R40H15088	R4012268	NR	NR
2000 4x2 Super duty	Fd Fd	TRW TRW		7644 - D777 7644 - D777	MD777 MD777	R40H15088 R40H15088	R4012268 R4012268	NR NR	NR NR
4x4 Super duty 3.73, 4.10, 4.30 Gear Ratio	Fd Fd	TRW TRW		7644 - D777 7644 - D777	MD777 MD777	R40H15088 R40H15088	R4012268 R4012268	NR NR	NR NR
4x4 Super duty 4.88, 5.38 Gear Ratio	Fd Fd	TRW TRW		7644 - D777 7644 - D777	MD777 MD777	R40H15088 R40H15088	R4012268 R4012268	NR NR	NR NR
4x2 Super duty 15,000 - 18,000 lb GVWR	Rd	TRW		7644 - D777	MD777	R40H15088	R4012268	NR	NR
4x4 Super duty 15,000 - 18,000 lb GVWR	Rd	TRW		7644 - D777	MD777	R40H15088	R4012268	NR	NR
4x2 Super duty 20,500 lb GVWR	Rd	TRW		7644 - D777	MD777	R40H15088	R4012268	NR	NR
4x4 Super duty 20,500 lb GVWR	Rd	TRW		7644 - D777	MD777	R40H15088	R4012268	NR	NR
1999 4x2 Super duty DRW from 3/22/99	Fd Fd	TRW TRW		7644 - D777 7644 - D777	MD777 MD777	R40H15088 R40H15088	R4012268 R4012268	NR NR	NR NR

217 - Power Brakes Except Speed Control

223 - Power Brakes, Speed Control

405 - Rotor Only

MERITOR DRUM OR ROTOR NO.	CALIPER OR CYLINDER BORE SIZE	MERITOR CALIPER OR WHEEL CYLINDER (LEFT)	MERITOR CALIPER OR WHEEL CYLINDER (RIGHT)	MERITOR CALIPER OR WHEEL CYLINDER REPAIR KIT	MERITOR CALIPER PISTON	MERITOR MASTER CYLINDER	MERITOR MASTER CYLINDER KIT	MERITOR BRAKE HOSE (LEFT)	MERITOR BRAKE HOSE (RIGHT)
									FORD(Cont.)
									F450(Cont.)
R44145325[405]	60mm	R4255862	R4255861	-	-	-	-	R4512420	-
R44145325[405]	60mm	R4255862	R4255861	-	-	-	-	R4512420	-
R44145325[405]	60mm	R4255862	R4255861	-	-	-	-	R4512421	-
R44145325[405]	60mm	R4255862	R4255861	-	-	-	-	R4512421	-
R4466924	60mm	R4255862	R4255861	-	-	R4113648[217]	N/A	R44145028	R4512419
R4466924	60mm	R4255862	R4255861	-	-	R4113649[223]	N/A	R44145028	R4512419
R44145274[405]	60mm	R4255862	R4255861	-	-	R4113648[217]	N/A	R44145028	R4512419
R44145274[405]	60mm	R4255862	R4255861	-	-	R4113649[223]	N/A	R44145028	R4512419
R4466924	60mm	R4255862	R4255861	-	-	R4113649[223]	N/A	R44145028	R4512419
R4466924	60mm	R4255862	R4255861	-	-	R4113648[217]	N/A	R44145028	R4512419
R44145325[405]	60mm	R4255862	R4255861	-	-	-	-	R4512420	-
R44145325[405]	60mm	R4255862	R4255861	-	-	-	-	R4512420	-
R44145325[405]	60mm	R4255862	R4255861	-	-	-	-	R4512421	-
R44145325[405]	60mm	R4255862	R4255861	-	-	-	-	R4512421	-
R4466924	60mm	R4255862	R4255861	-	-	R4113649[223]	N/A	R44145028	R4512419
R4466924	60mm	R4255862	R4255861	-	-	R4113648[217]	N/A	R44145028	R4512419
R44145274[405]	60mm	R4255862	R4255861	-	-	R4113649[223]	N/A	R44145028	R4512419
R44145274[405]	60mm	R4255862	R4255861	-	-	R4113648[217]	N/A	R44145028	R4512419
R4466924	60mm	R4255862	R4255861	-	-	R4113648[217]	N/A	R44145028	R4512419
R4466924	60mm	R4255862	R4255861	-	-	R4113649[223]	N/A	R44145028	R4512419
R44145325[405]	60mm	R4255862	R4255861	-	-	-	-	R4512420	-
R44145325[405]	60mm	R4255862	R4255861	-	-	-	-	R4512420	-
R44145325[405]	60mm	R4255862	R4255861	-	-	-	-	R4512421	-
R44145325[405]	60mm	R4255862	R4255861	-	-	-	-	R4512421	-
R4466924	60mm	R4255862	R4255861	-	-	R4113649[223]	N/A	R44145028	R4512419
R4466924	60mm	R4255862	R4255861	-	-	R4113648[217]	N/A	R44145028	R4512419
R44145274[405]	60mm	R4255862	R4255861	-	-	R4113648[217]	N/A	R44145028	R4512419
R44145274[405]	60mm	R4255862	R4255861	-	-	R4113649[223]	N/A	R44145028	R4512419
R4466924	60mm	R4255862	R4255861	-	-	R4113649[223]	N/A	R44145028	R4512419
R4466924	60mm	R4255862	R4255861	-	-	R4113648[217]	N/A	R44145028	R4512419
R44145325[405]	60mm	R4255862	R4255861	-	-	-	-	R4512420	-
R44145325[405]	60mm	R4255862	R4255861	-	-	-	-	R4512420	-
R44145325[405]	60mm	R4255862	R4255861	-	-	-	-	R4512421	-
R44145325[405]	60mm	R4255862	R4255861	-	-	-	-	R4512421	-
R4466924	60mm	R4255862	R4255861	-	-	R4113648[217]	N/A	R44145028	R4512419
R4466924	60mm	R4255862	R4255861	-	-	R4113649[223]	N/A	R44145028	R4512419

MAKE MODEL YEAR AXLE CODE AXLE WEIGHT	AXLE & BRK. TYPE	BRK. MFG.	BRAKE SIZE	FMSI	MERITOR DISC PAD OR BRAKE SHOE	MERITOR GUIDE PIN OR RETURN SPRING KIT	MERITOR CALIPER HWD. KIT OR RETURN SPRING KIT	MERITOR ADJUSTER KIT (LEFT WHEEL)	MERITOR ADJUSTER KIT (RIGHT WHEEL)
FORD(Cont.)									
F450(Cont.)									
1999 4x2 Super duty DRW w/ ABS to 3/22/99	Fd Fd	TRW TRW		7644 - D777 7644 - D777	MD777 MD777	R40H15088 R40H15088	R4012268 R4012268	NR NR	NR NR
4x2 Super duty exc.7388, 5.38 ratio to 3/22/99	Fd Fd	TRW TRW		7644 - D777 7644 - D777	MD777 MD777	R40H15088 R40H15088	R4012268 R4012268	NR NR	NR NR
4x2 Super duty SRW from 3/22/99	Fd Fd	TRW TRW		7644 - D777 7644 - D777	MD777 MD777	R40H15088 R40H15088	R4012268 R4012268	NR NR	NR NR
4x4 Super duty DRW from 3/22/99	Fd Fd	TRW TRW		7644 - D777 7644 - D777	MD777 MD777	R40H15088 R40H15088	R4012268 R4012268	NR NR	NR NR
4x4 Super duty DRW w/ ABS to 3/22/99	Fd Fd	TRW TRW		7644 - D777 7644 - D777	MD777 MD777	R40H15088 R40H15088	R4012268 R4012268	NR NR	NR NR
4x4 Super duty SRW from 3/22/99	Fd Fd	TRW TRW		7644 - D777 7644 - D777	MD777 MD777	R40H15088 R40H15088	R4012268 R4012268	NR NR	NR NR
4x2 Super duty 15,000 - 18,000 lb GVWR	Rd	TRW		7644 - D777	MD777	R40H15088	R4012268	NR	NR
4x4 Super duty 15,000 - 18,000 lb GVWR	Rd	TRW		7644 - D777	MD777	R40H15088	R4012268	NR	NR
4x2 Super duty 20,500 lb GVWR	Rd	TRW		7644 - D777	MD777	R40H15088	R4012268	NR	NR
4x4 Super duty 20,500 lb GVWR	Rd	TRW		7644 - D777	MD777	R40H15088	R4012268	NR	NR
F450, 500 CONVENTIONAL; F53, 66 STRIPPED CHASSIS: SUPER DUTY SERIES									
2000 Super Duty, 4x2, Mono Beam Front Axle, Dual Rear Wheels	Fd	KH		7644 - D777	MD777	NR	NR	NR	NR
Super Duty, 4x4, 3.73, 4.10, 4.30 Gear Ratio, Mono Beam Front Axle, Dual Rear Wheels, 4 Wheel ABS	Fd	KH		7644 - D777	MD777	NR	NR	NR	NR
Super Duty, 4x4, 3.73, 4.10, 4.30 Gear Ratio, Mono Beam Front Axle, Single Rear Wheels, 4 Wheel ABS	Fd	KH		7644 - D777	MD777	NR	NR	NR	NR
Super Duty, 4x4, 3.73, 4.10, 4.30 Gear Ratio, Mono Beam Front Axle, Single Rear Wheels, Rear Wheel ABS	Fd	KH		7644 - D777	MD777	NR	NR	NR	NR
Super Duty, 4x4, 4.88, 5.38 Gear Ratio, Mono Beam Front Axle, Dual Rear Wheels	Fd	KH		7644 - D777	MD777	NR	NR	NR	NR
Super Duty, Dual Rear Wheels	Fd	KH		7644 - D777	MD777	NR	NR	NR	NR
Super Duty 15,500lb, 18,000lb. GVWR	Rd	KH		7644 - D777	MD777	NR	NR	NR	NR
Super Duty 20,500lb. GVWR	Rd	KH		7644 - D777	MD777	NR	NR	NR	NR
1999 Super Duty, 4x2, Mono Beam Front Axle, Dual Rear Wheels	Fd	KH		7644 - D777	MD777	NR	NR	NR	NR
Super Duty, 4x4, 3.73, 4.10, 4.30 Gear Ratio, Mono Beam Front Axle, Dual Rear Wheels, 4 Wheel ABS	Fd	KH		7644 - D777	MD777	NR	NR	NR	NR

217 - Power Brakes Except Speed Control 223 - Power Brakes, Speed Control 405 - Rotor Only

MERITOR DRUM OR ROTOR NO.	CALIPER OR CYLINDER BORE SIZE	MERITOR CALIPER OR WHEEL CYLINDER (LEFT)	MERITOR CALIPER OR WHEEL CYLINDER (RIGHT)	MERITOR CALIPER OR WHEEL CYLINDER REPAIR KIT	MERITOR CALIPER PISTON	MERITOR MASTER CYLINDER	MERITOR MASTER CYLINDER KIT	MERITOR BRAKE HOSE (LEFT)	MERITOR BRAKE HOSE (RIGHT)
									FORD(Cont.)
									F450(Cont.)
R44145257[405] R44145257[405]	60mm 60mm	R4255862 R4255862	R4255861 R4255861	- -	- -	R4113648[217] R4113649[223]	N/A N/A	R44145028 R44145028	R4512419 R4512419
R44145245[405] R44145245[405]	60mm 60mm	R4255862 R4255862	R4255861 R4255861	- -	- -	R4113648[217] R4113649[223]	N/A N/A	R44145028 R44145028	R4512419 R4512419
R44145274[405] R44145274[405]	60mm 60mm	R4255862 R4255862	R4255861 R4255861	- -	- -	R4113649[223] R4113648[217]	N/A N/A	R44145028 R44145028	R4512419 R4512419
R4466924 R4466924	60mm 60mm	R4255862 R4255862	R4255861 R4255861	- -	- -	R4113649[223] R4113648[217]	N/A N/A	R44145028 R44145028	R4512419 R4512419
R44145257[405] R44145257[405]	60mm 60mm	R4255862 R4255862	R4255861 R4255861	- -	- -	R4113649[223] R4113648[217]	N/A N/A	R44145028 R44145028	R4512419 R4512419
R44145274[405] R44145274[405]	60mm 60mm	R4255862 R4255862	R4255861 R4255861	- -	- -	R4113648[217] R4113649[223]	N/A N/A	R44145028 R44145028	R4512419 R4512419
R44145325[405]	60mm	R4255862	R4255861	-	-	-	-	R4512420	-
R44145325[405]	60mm	R4255862	R4255861	-	-	-	-	R4512420	-
R44145325[405]	60mm	R4255862	R4255861	-	-	-	-	R4512421	-
R44145325[405]	60mm	R4255862	R4255861	-	-	-	-	R4512421	-
									F450, 500 CONVENTIONAL; F53, 66 STRIPPED CHASSIS: SUPER DUTY SERIES
-		R4211474X	R4211474X	-	-	-	-	N/A	N/A
-		R4211474X	R4211474X	-	-	-	-	N/A	N/A
-		R4211474X	R4211474X	-	-	-	-	N/A	N/A
-		R4211474X	R4211474X	-	-	-	-	N/A	N/A
-		R4211474X	R4211474X	-	-	-	-	N/A	N/A
-		R4211474X	R4211474X	-	-	-	-	N/A	N/A
-		R4211474X	R4211474X	-	-	-	-	N/A	N/A
-		R4211474X	R4211474X	-	-	-	-	N/A	N/A
-		R4211474X	R4211474X	-	-	-	-	N/A	N/A
-		R4211474X	R4211474X	-	-	-	-	N/A	N/A

MAKE MODEL YEAR AXLE CODE AXLE WEIGHT	AXLE & BRK. TYPE	BRK. MFG.	BRAKE SIZE	FMSI	MERITOR DISC PAD OR BRAKE SHOE	MERITOR GUIDE PIN OR RETURN SPRING KIT	MERITOR CALIPER HWD. KIT OR RETURN SPRING KIT	MERITOR ADJUSTER KIT (LEFT WHEEL)	MERITOR ADJUSTER KIT (RIGHT WHEEL)
FORD(Cont.)									
F450, 500 CONVENTIONAL; F53, 66 STRIPPED CHASSIS: SUPER DUTY SERIES(Cont.)									
1999 Super Duty, 4x4, 3.73, 4.10, 4.30 Gear Ratio, Mono Beam Front Axle, Single Rear Wheels, 4 Wheel ABS	Fd	KH		7644 - D777	MD777	NR	NR	NR	NR
Super Duty, 4x4, 3.73, 4.10, 4.30 Gear Ratio, Mono Beam Front Axle, Single Rear Wheels, Rear Wheel ABS	Fd	KH		7644 - D777	MD777	NR	NR	NR	NR
Super Duty, 4x4, 4.88, 5.38 Gear Ratio, Mono Beam Front Axle, Dual Rear Wheels	Fd	KH		7644 - D777	MD777	NR	NR	NR	NR
Super Duty, Dual Rear Wheels	Fd	KH		7644 - D777	MD777	NR	NR	NR	NR
Super Duty 15,500lb, 18,000lb. GVWR	Rd	KH		7644 - D777	MD777	NR	NR	NR	NR
Super Duty 20,500lb. GVWR	Rd	KH		7644 - D777	MD777	NR	NR	NR	NR
1998 Super Duty	Fd	KH		7299 - D411	MD411	NR	R40H5735	NR	NR
	Fd	KH		7299 - D411	MD411	NR	R40H5735	NR	NR
	Rd	KH		7299 - D411	MD411	NR	R40H5735	NR	NR
	Rd	KH		7299 - D411	MD411	NR	R40H5735	NR	NR
1997	Fd	KH		7299 - D411	MD411	NR	R40H5735	NR	NR
	Fd	KH		7299 - D411	MD411	NR	R40H5735	NR	NR
	Rd	KH		7299 - D411	MD411	NR	R40H5735	NR	NR
	Rd	KH		7299 - D411	MD411	NR	R40H5735	NR	NR
1996	Fd	KH		7299 - D411	MD411	NR	R40H5735	NR	NR
	Fd	KH		7299 - D411	MD411	NR	R40H5735	NR	NR
	Rd	KH		7299 - D411	MD411	NR	R40H5735	NR	NR
	Rd	KH		7299 - D411	MD411	NR	R40H5735	NR	NR
1995	Fd	KH		7299 - D411	MD411	NR	R40H5735	NR	NR
	Fd	KH		7299 - D411	MD411	NR	R40H5735	NR	NR
	Rd	KH		7299 - D411	MD411	NR	R40H5735	NR	NR
	Rd	KH		7299 - D411	MD411	NR	R40H5735	NR	NR
1994	Fd	KH		7299 - D411	MD411	NR	R40H5735	NR	NR
	Fd	KH		7299 - D411	MD411	NR	R40H5735	NR	NR
	Fd	KH		7299 - D411	MD411	NR	R40H5735	NR	NR
	Fd	KH		7299 - D411	MD411	NR	R40H5735	NR	NR
	Rd	KH		7299 - D411	MD777	NR	R40H5735	NR	NR
	Rd	KH		7299 - D411	MD777	NR	R40H5735	NR	NR
1993	Fd	KH		7299 - D411	MD411	NR	R40H5735	NR	NR
	Fd	KH		7299 - D411	MD411	NR	R40H5735	NR	NR
	Fd	KH		7299 - D411	MD411	NR	R40H5735	NR	NR
	Rd	KH		7299 - D411	MD777	NR	R40H5735	NR	NR
	Rd	KH		7299 - D411	MD777	NR	R40H5735	NR	NR
1992	Fd	KH		7299 - D411	MD411	NR	R40H5735	NR	NR
	Fd	KH		7299 - D411	MD411	NR	R40H5735	NR	NR
	Fd	KH		7299 - D411	MD411	NR	R40H5735	NR	NR
	Rd	KH		7299 - D411	MD777	NR	R40H5735	NR	NR
	Rd	KH		7299 - D411	MD777	NR	R40H5735	NR	NR
1991	Fd	KH		7299 - D411	MD411	NR	R40H5735	NR	NR
	Fd	KH		7299 - D411	MD411	NR	R40H5735	NR	NR
	Fd	KH		7299 - D411	MD411	NR	R40H5735	NR	NR
	Rd	KH		7299 - D411	MD777	NR	R40H5735	NR	NR

53 - Power Brakes
54 - Manual Brakes
55 - W4,Stripped Chassis,Except 14250 GVWR
56 - Stripped Chassis, Front Disc Brakes
201 - Steel Piston
218 - Power Brakes, Extended Length
228 - Except Speed Control
229 - Speed Control
309 - Power Brakes, Hydroboost

MERITOR DRUM OR ROTOR NO.	CALIPER OR CYLINDER BORE SIZE	MERITOR CALIPER OR WHEEL CYLINDER (LEFT)	MERITOR CALIPER OR WHEEL CYLINDER (RIGHT)	MERITOR CALIPER OR WHEEL CYLINDER REPAIR KIT	MERITOR CALIPER PISTON	MERITOR MASTER CYLINDER	MERITOR MASTER CYLINDER KIT	MERITOR BRAKE HOSE (LEFT)	MERITOR BRAKE HOSE (RIGHT)
									FORD(Cont.)
									F450, 500 CONVENTIONAL; F53, 66 STRIPPED CHASSIS: SUPER DUTY SERIES(Cont.)
-		R4211474X	R4211474X	-	-	-	-	N/A	N/A
-		R4211474X	R4211474X	-	-	-	-	N/A	N/A
-		R4211474X	R4211474X	-	-	-	-	N/A	N/A
-		R4211474X	R4211474X	-	-	-	-	N/A	N/A
-		R4211474X	R4211474X	-	-	-	-	N/A	N/A
-		R4211474X	R4211474X	-	-	-	-	N/A	N/A
R44141455[405]	2-23/64 "	R42R55605	R42R55604	R4066204	R4090088S[201]	R4112843[229]	R4110410	R4578303	R451554
R44141455[405]	2-23/64 "	R42R55605	R42R55604	R4066204	R4090088S[201]	R4112357[228]	R4110410	R4578303	R451554
-	2-23/64 "	R42R55605	R42R55604	R4066204	R4090088S[201]	-	-	N/A	N/A
-	2-23/64 "	R42R55605	R42R55604	R4066204	R4090088S[201]	-	-	N/A	-
R44141455[405]	2-23/64 "	R42R55605	R42R55604	R4066204	R4090088S[201]	R4112843[229]	R4110410	R4578303	R451554
R44141455[405]	2-23/64 "	R42R55605	R42R55604	R4066204	R4090088S[201]	R4112357[228]	R4110410	R4578303	R451554
-	2-23/64 "	R42R55605	R42R55604	R4066204	R4090088S[201]	-	-	N/A	N/A
-	2-23/64 "	R42R55605	R42R55604	R4066204	R4090088S[201]	-	-	N/A	-
R44141455[405]	2-23/64 "	R42R55605	R42R55604	R4066204	R4090088S[201]	R4112357[228]	R4110410	R4578303	R451554
R44141455[405]	2-23/64 "	R42R55605	R42R55604	R4066204	R4090088S[201]	R4112843[229]	R4110410	R4578303	R451554
-	2-23/64 "	R42R55605	R42R55604	R4066204	R4090088S[201]	-	-	N/A	N/A
-	2-23/64 "	R42R55605	R42R55604	R4066204	R4090088S[201]	-	-	R4578182	-
R44141455[405]	2-23/64 "	R42R55605	R42R55604	R4066204	R4090088S[201]	R4112357[228]	R4110410	R4578303	R451554
R44141455[405]	2-23/64 "	R42R55605	R42R55604	R4066204	R4090088S[201]	R4112843[229]	R4110410	R4578303	R451554
-	2-23/64 "	R42R55605	R42R55604	R4066204	R4090088S[201]	-	-	N/A	N/A
-	2-23/64 "	R42R55605	R42R55604	R4066204	R4090088S[201]	-	-	R4578182	-
R44141455[405]	2-23/64 "	R42R55605	R42R55604	R4066204	R4090088S[201]	N/A[56]	R4122935	R451554	R4578159
R44141455[405]	2-23/64 "	R42R55605	R42R55604	R4066204	R4090088S[201]	R4113041[309]	R4122934	R451554	R4578159
R44141455[405]	2-23/64 "	R42R55605	R42R55604	R4066204	R4090088S[201]	R4112357[55]	R4110410	R4578303	R451554
R44141455[405]	2-23/64 "	R42R55605	R42R55604	R4066204	R4090088S[201]	N/A[54]	R4110410	R4578303	R451554
R44141455[405]	2-23/64 "	R42R55605	R42R55604	R4066204	R4090088S[201]	-	-	R4578182	R4578182
R44141455[405]	2-23/64 "	R42R55605	R42R55604	R4066204	R4090088S[201]	-	-	R4578166	R4578166
R44141455[405]	2-23/64 "	R42R55605	R42R55604	R4066204	R4090088S[201]	N/A[55]	R4122937	R451554	R4578159
R44141455[405]	2-23/64 "	R42R55605	R42R55604	R4066204	R4090088S[201]	R4113041[309]	R4122934	R4578303	R451554
R44141455[405]	2-23/64 "	R42R55605	R42R55604	R4066204	R4090088S[201]	R4112492[56]	R4122935	R451554	R4578159
R44141455[405]	2-23/64 "	R42R55605	R42R55604	R4066204	R4090088S[201]	-	-	R4578166	R4578166
R44141455[405]	2-23/64 "	R42R55605	R42R55604	R4066204	R4090088S[201]	-	-	R4578182	R4578182
R44141455[405]	2-23/64 "	R42R55605	R42R55604	R4066204	R4090088S[201]	R4112492[56]	R4122935	R4578303	R451554
R44141455[405]	2-23/64 "	R42R55605	R42R55604	R4066204	R4090088S[201]	R4112575[55]	R4122937	R451554	R4578159
R44141455[405]	2-23/64 "	R42R55605	R42R55604	R4066204	R4090088S[201]	N/A[54]	R4110412	R451554	R4578159
R44141455[405]	2-23/64 "	R42R55605	R42R55604	R4066204	R4090088S[201]	-	-	R4578182	R4578182
R44141455[405]	2-23/64 "	R42R55605	R42R55604	R4066204	R4090088S[201]	-	-	R4578166	R4578166
R44141455[405]	2-23/64 "	R42R55605	R42R55604	R4066204	R4090088S[201]	R4112575[55]	R4122937	R4578303	R451554
R44141455[405]	2-23/64 "	R42R55605	R42R55604	R4066204	R4090088S[201]	R4112313[218]	R4110412	R451554	R4578159
R44141455[405]	2-23/64 "	R42R55605	R42R55604	R4066204	R4090088S[201]	N/A[53]	R4110411	R451554	R4578159
R44141455[405]	2-23/64 "	R42R55605	R42R55604	R4066204	R4090088S[201]	-	-	R4578166	R4578166

405 - Rotor Only

MAKE MODEL YEAR AXLE CODE AXLE WEIGHT	AXLE & BRK. TYPE	BRK. MFG.	BRAKE SIZE	FMSI	MERITOR DISC PAD OR BRAKE SHOE	MERITOR GUIDE PIN OR RETURN SPRING KIT	MERITOR CALIPER HWD. KIT OR RETURN SPRING KIT	MERITOR ADJUSTER KIT (LEFT WHEEL)	MERITOR ADJUSTER KIT (RIGHT WHEEL)
FORD(Cont.)									
F450, 500 CONVENTIONAL; F53, 66 STRIPPED CHASSIS: SUPER DUTY SERIES(Cont.)									
1991	Rd	KH		7299 - D411	MD777	NR	R40H5735	NR	NR
1990	Fd	KH		7299 - D411	MD411	NR	R40H5735	NR	NR
	Fd	KH		7299 - D411	MD411	NR	R40H5735	NR	NR
	Fd	KH		7299 - D411	MD411	NR	R40H5735	NR	NR
	Rd	KH		7299 - D411	MD777	NR	R40H5735	NR	NR
1989	Fd	KH		7299 - D411	MD411	NR	R40H5735	NR	NR
	Fd	KH		7299 - D411	MD411	NR	R40H5735	NR	NR
	Rd	KH		7299 - D411	MD777	NR	R40H5735	NR	NR
1988	Fd	KH		7299 - D411	MD411	NR	R40H5735	NR	NR
	Rd	KH		7299 - D411	MD777	NR	R40H5735	NR	NR
1977	Fa	WG	15 " x 3 "	1245C - 321	R700321	R40H521	R40H9237	R40H3502	R40H3503
Super Duty F046, F047	Fm	BX	13 " x 2-1/4 "	2043 - 36	Discontinued	R40H130	R404208	R40H3514	R40H3514
Super Duty F050, F055, F060	Fa	KH	14 " x 2-1/2 "	2060 - 361	Discontinued	R40H596	R40H9219	R40H3536	R40H3537
Super Duty R130	Ra	KH	15 " x 4 "	4647 - 401	R700401	R40H595	R40H9220	R40H3538	R40H3539
	Rm	BX	14.125 x 3-1/2 "	2041 - 22	N/A	R40H500	R40H9224	R404177	R404176
	Rm	BX	14.125 x 3-1/2 "	2041 - 22	N/A	R40H500	R40H9224	R404177	R404176
Super Duty R150	Ra	KH	15 " x 5 "	4646 - 400	R700400	R40H595	R40H9220	R40H3538	R40H3539
	Ra	WG	15 " x 5 "	1252 - 346	R700346	R40H597	R40H9200	R40H3540	R40H3541
1976 Super Duty	Fa	WG	15 " x 3 "	1245C - 321	R700321	R40H521	R40H9237	R40H3502	R40H3503
Super Duty F046, F047	Fm	BX	13 " x 2-1/4 "	2043 - 36	Discontinued	R40H130	R404208	R40H3514	R40H3514
Super Duty F050, F055, F060	Fa	KH	14 " x 2-1/2 "	2060 - 361	Discontinued	R40H596	R40H9219	R40H3536	R40H3537
Super Duty R130	Ra	KH	15 " x 4 "	4647 - 401	R700401	R40H595	R40H9220	R40H3538	R40H3539
	Rm	BX	14.125 x 3-1/2 "	2041 - 22	N/A	R40H500	R40H9224	R404177	R404176
	Rm	BX	14.125 x 3-1/2 "	2041 - 22	N/A	R40H500	R40H9224	R404177	R404176
Super Duty R150	Ra	KH	15 " x 5 "	4646 - 400	R700400	R40H595	R40H9220	R40H3538	R40H3539
	Ra	WG	15 " x 5 "	1252 - 346	R700346	R40H597	R40H9200	R40H3540	R40H3541
1975 Super Duty	Fa	WG	15 " x 3 "	1245C - 321	R700321	R40H521	R40H9237	R40H3502	R40H3503
Super Duty F046, F047	Fm	BX	13 " x 2-1/4 "	2043 - 36	Discontinued	R40H130	R404208	R40H3514	R40H3514
Super Duty F050, F055, F060	Fa	KH	14 " x 2-1/2 "	2060 - 361	Discontinued	R40H596	R40H9219	R40H3536	R40H3537
Super Duty R130	Ra	KH	15 " x 4 "	4647 - 401	R700401	R40H595	R40H9220	R40H3538	R40H3539
	Rm	BX	14.125 x 3-1/2 "	2041 - 22	N/A	R40H500	R40H9224	R404177	R404176
	Rm	BX	14.125 x 3-1/2 "	2041 - 22	N/A	R40H500	R40H9224	R404177	R404176
Super Duty R150	Ra	KH	15 " x 5 "	4646 - 400	R700400	R40H595	R40H9220	R40H3538	R40H3539
	Ra	WG	15 " x 5 "	1252 - 346	R700346	R40H597	R40H9200	R40H3540	R40H3541
1974 Super Duty	Fa	WG	15 " x 3 "	1245C - 321	R700321	R40H521	R40H9237	R40H3502	R40H3503
Super Duty F046, F047	Fm	BX	13 " x 2-1/4 "	2043 - 36	Discontinued	R40H130	R404208	R40H3514	R40H3514
Super Duty F050, F055, F060	Fa	KH	14 " x 2-1/2 "	2060 - 361	Discontinued	R40H596	R40H9219	R40H3536	R40H3537
Super Duty R130	Ra	KH	15 " x 4 "	4647 - 401	R700401	R40H595	R40H9220	R40H3538	R40H3539
	Rm	BX	14.125 x 3-1/2 "	2041 - 22	N/A	R40H500	R40H9224	R404177	R404176
	Rm	BX	14.125 x 3-1/2 "	2041 - 22	N/A	R40H500	R40H9224	R404177	R404176
Super Duty R150	Ra	KH	15 " x 5 "	4646 - 400	R700400	R40H595	R40H9220	R40H3538	R40H3539

54 - Manual Brakes
218 - Power Brakes, Extended Length
55 - W4,Stripped Chassis,Except 14250 GVWR
224 - Power Brakes, Standard Length
201 - Steel Piston
405 - Rotor Only

MERITOR DRUM OR ROTOR NO.	CALIPER OR CYLINDER BORE SIZE	MERITOR CALIPER OR WHEEL CYLINDER (LEFT)	MERITOR CALIPER OR WHEEL CYLINDER (RIGHT)	MERITOR CALIPER OR WHEEL CYLINDER REPAIR KIT	MERITOR CALIPER PISTON	MERITOR MASTER CYLINDER	MERITOR MASTER CYLINDER KIT	MERITOR BRAKE HOSE (LEFT)	MERITOR BRAKE HOSE (RIGHT)
									FORD(Cont.)
F450, 500 CONVENTIONAL; F53, 66 STRIPPED CHASSIS: SUPER DUTY SERIES(Cont.)									
R44141455[405]	2-23/64 "	R42R55605	R42R55604	R4066204	R4090088S[201]	-	-	R4578166	R4578166
R44141455[405]	2-23/64 "	R42R55605	R42R55604	R4066204	R4090088S[201]	N/A[54]	R4110410	R451554	R4578159
R44141455[405]	2-23/64 "	R42R55605	R42R55604	R4066204	R4090088S[201]	R4112313[218]	R4110412	R4578166	R4578166
R44141455[405]	2-23/64 "	R42R55605	R42R55604	R4066204	R4090088S[201]	R4112313[224]	R4110411	R451554	R4578159
R44141455[405]	2-23/64 "	R42R55605	R42R55604	R4066204	R4090088S[201]	-	-	R4577245	R4577245
R44141455[405]	2-23/64 "	R42R55605	R42R55604	R4066204	R4090088S[201]	R4112313[224]	R4110411	R451554	R4578159
R44141455[405]	2-23/64 "	R42R55605	R42R55604	R4066204	R4090088S[201]	R4112357[55]	R4110410	R4577245	R4578159
R44141455[405]	2-23/64 "	R42R55605	R42R55604	R4066204	R4090088S[201]	-	-	R4577245	R4577245
R44141455[405]	2-23/64 "	R42R55605	R42R55604	R4066204	R4090088S[201]	R4112357[55]	R4110410	R451554	R4578159
R44141455[405]	2-23/64 "	R42R55605	R42R55604	R4066204	R4090088S[201]	-	-	R4577245	R4577245
-	1-1/8 "	R4133714	R4133715	R4166926	NR	-	-	-	-
-	15/16 "	R4133366	R4133367	R4166852	NR	-	-	-	-
-	1.09375	R4133484	R4133485	R4166819	NR	-	-	-	-
-	1-1/2 "	R4033607	R4033607	R4166818	NR	-	-	-	-
-	1-1/2 "	R4133257	R4133257	R415181	NR	-	-	-	-
-	1-1/2 "	R4133256	R4133256	R415181	NR	-	-	-	-
-	1-1/2 "	R4033607	R4033607	R4166818	NR	-	-	-	-
-	1-5/8 "	R4133338	R4133338	R4166689	NR	-	-	-	-
-	1-1/8 "	R4133714	R4133715	R4166926	NR	-	-	-	-
-	15/16 "	R4133366	R4133367	R4166852	NR	-	-	-	-
-	1.09375	R4133484	R4133485	R4166819	NR	-	-	-	-
-	1-1/2 "	R4033607	R4033607	R4166818	NR	-	-	-	-
-	1-1/2 "	R4133256	R4133256	R415181	NR	-	-	-	-
-	1-1/2 "	R4133257	R4133257	R415181	NR	-	-	-	-
-	1-1/2 "	R4033607	R4033607	R4166818	NR	-	-	-	-
-	1-5/8 "	R4133338	R4133338	R4166689	NR	-	-	-	-
-	1-1/8 "	R4133714	R4133715	R4166926	NR	-	-	-	-
-	15/16 "	R4133366	R4133367	R4166852	NR	-	-	-	-
-	1.09375	R4133484	R4133485	R4166819	NR	-	-	-	-
-	1-1/2 "	R4033607	R4033607	R4166818	NR	-	-	-	-
-	1-1/2 "	R4133257	R4133257	R415181	NR	-	-	-	-
-	1-1/2 "	R4133256	R4133256	R415181	NR	-	-	-	-
-	1-1/2 "	R4033607	R4033607	R4166818	NR	-	-	-	-
-	1-5/8 "	R4133338	R4133338	R4166689	NR	-	-	-	-
-	1-1/8 "	R4133714	R4133715	R4166926	NR	-	-	-	-
-	15/16 "	R4133366	R4133367	R4166852	NR	-	-	-	-
-	1.09375	R4133484	R4133485	R4166819	NR	-	-	-	-
-	1-1/2 "	R4033607	R4033607	R4166818	NR	-	-	-	-
-	1-1/2 "	R4133257	R4133257	R415181	NR	-	-	-	-
-	1-1/2 "	R4133256	R4133256	R415181	NR	-	-	-	-
-	1-1/2 "	R4033607	R4033607	R4166818	NR	-	-	-	-

MAKE MODEL YEAR AXLE CODE AXLE WEIGHT	AXLE & BRK. TYPE	BRK. MFG.	BRAKE SIZE	FMSI	MERITOR DISC PAD OR BRAKE SHOE	MERITOR GUIDE PIN OR RETURN SPRING KIT	MERITOR CALIPER HWD. KIT OR RETURN SPRING KIT	MERITOR ADJUSTER KIT (LEFT WHEEL)	MERITOR ADJUSTER KIT (RIGHT WHEEL)
FORD(Cont.)									
F450, 500 CONVENTIONAL; F53, 66 STRIPPED CHASSIS: SUPER DUTY SERIES(Cont.)									
1974	Ra	WG	15 " x 5 "	1252 - 346	R700346	R40H597	R40H9200	R40H3540	R40H3541
1973 Super Duty	Fa	WG	15 " x 3 "	1245C - 321	R700321	R40H521	R40H9237	R40H3502	R40H3503
Super Duty F046, F047	Fm	BX	13 " x 2-1/4 "	2043 - 36	Discontinued	R40H130	R404208	R40H3514	R40H3514
Super Duty F050, F055, F060	Fa	KH	14 " x 2-1/2 "	2060 - 361	Discontinued	R40H596	R40H9219	R40H3536	R40H3537
Super Duty R130	Ra	KH	15 " x 4 "	4647 - 401	R700401	R40H595	R40H9220	R40H3538	R40H3539
	Rm	BX	14.125 x 3-1/2 "	2041 - 22	N/A	R40H500	R40H9224	R404177	R404176
	Rm	BX	14.125 x 3-1/2 "	2041 - 22	N/A	R40H500	R40H9224	R404177	R404176
Super Duty R150	Ra	KH	15 " x 5 "	4646 - 400	R700400	R40H595	R40H9220	R40H3538	R40H3539
	Ra	WG	15 " x 5 "	1252 - 346	R700346	R40H597	R40H9200	R40H3540	R40H3541
1972 Super Duty	Fa	WG	15 " x 3 "	1245C - 321	R700321	R40H521	R40H9237	R40H3502	R40H3503
Super Duty F046, F047	Fm	BX	13 " x 2-1/4 "	2043 - 36	Discontinued	R40H130	R404208	R40H3514	R40H3514
Super Duty F050, F055, F060	Fa	KH	14 " x 2-1/2 "	2060 - 361	Discontinued	R40H596	R40H9219	R40H3536	R40H3537
Super Duty R130	Ra	KH	15 " x 4 "	4647 - 401	R700401	R40H595	R40H9220	R40H3538	R40H3539
	Rm	BX	14.125 x 3-1/2 "	2041 - 22	N/A	R40H500	R40H9224	R404177	R404176
	Rm	BX	14.125 x 3-1/2 "	2041 - 22	N/A	R40H500	R40H9224	R404177	R404176
Super Duty R150	Ra	KH	15 " x 5 "	4646 - 400	R700400	R40H595	R40H9220	R40H3538	R40H3539
	Ra	WG	15 " x 5 "	1252 - 346	R700346	R40H597	R40H9200	R40H3540	R40H3541
1971 Super Duty	Fa	WG	15 " x 3 "	1245C - 321	R700321	R40H521	R40H9237	R40H3502	R40H3503
Super Duty F046, F047	Fm	BX	13 " x 2-1/4 "	2043 - 36	Discontinued	R40H130	R404208	R40H3514	R40H3514
Super Duty F050, F055, F060	Fa	KH	14 " x 2-1/2 "	2060 - 361	Discontinued	R40H596	R40H9219	R40H3536	R40H3537
Super Duty R130	Ra	KH	15 " x 4 "	4647 - 401	R700401	R40H595	R40H9220	R40H3538	R40H3539
	Rm	BX	14.125 x 3-1/2 "	2041 - 22	N/A	R40H500	R40H9224	R404177	R404176
	Rm	BX	14.125 x 3-1/2 "	2041 - 22	N/A	R40H500	R40H9224	R404177	R404176
Super Duty R150	Ra	KH	15 " x 5 "	4646 - 400	R700400	R40H595	R40H9220	R40H3538	R40H3539
	Ra	WG	15 " x 5 "	1252 - 346	R700346	R40H597	R40H9200	R40H3540	R40H3541
1970 Super Duty	Fa	WG	15 " x 3 "	1245C - 321	R700321	R40H521	R40H9237	R40H3502	R40H3503
Super Duty F046, F047	Fm	BX	13 " x 2-1/4 "	2043 - 36	Discontinued	R40H130	R404208	R40H3514	R40H3514
Super Duty F050, F055, F060	Fa	KH	14 " x 2-1/2 "	2060 - 361	Discontinued	R40H596	R40H9219	R40H3536	R40H3537
Super Duty R130	Ra	KH	15 " x 4 "	4647 - 401	R700401	R40H595	R40H9220	R40H3538	R40H3539
	Rm	BX	14.125 x 3-1/2 "	2041 - 22	N/A	R40H500	R40H9224	R404177	R404176
	Rm	BX	14.125 x 3-1/2 "	2041 - 22	N/A	R40H500	R40H9224	R404177	R404176
Super Duty R150	Ra	KH	15 " x 5 "	4646 - 400	R700400	R40H595	R40H9220	R40H3538	R40H3539
	Ra	WG	15 " x 5 "	1252 - 346	R700346	R40H597	R40H9200	R40H3540	R40H3541
1969 Super Duty	Fa	WG	15 " x 3 "	1245C - 321	R700321	R40H521	R40H9237	R40H3502	R40H3503
Super Duty F046, F047	Fm	BX	13 " x 2-1/4 "	2043 - 36	Discontinued	R40H130	R404208	R40H3514	R40H3514
Super Duty F050, F055, F060	Fa	KH	14 " x 2-1/2 "	2060 - 361	Discontinued	R40H596	R40H9219	R40H3536	R40H3537
Super Duty R130	Ra	KH	15 " x 4 "	4647 - 401	R700401	R40H595	R40H9220	R40H3538	R40H3539
	Rm	BX	14.125 x 3-1/2 "	2041 - 22	N/A	R40H500	R40H9224	R404177	R404176
	Rm	BX	14.125 x 3-1/2 "	2041 - 22	N/A	R40H500	R40H9224	R404177	R404176

MERITOR DRUM OR ROTOR NO.	CALIPER OR CYLINDER BORE SIZE	MERITOR CALIPER OR WHEEL CYLINDER (LEFT)	MERITOR CALIPER OR WHEEL CYLINDER (RIGHT)	MERITOR CALIPER OR WHEEL CYLINDER REPAIR KIT	MERITOR CALIPER PISTON	MERITOR MASTER CYLINDER	MERITOR MASTER CYLINDER KIT	MERITOR BRAKE HOSE (LEFT)	MERITOR BRAKE HOSE (RIGHT)
									FORD(Cont.)
F450, 500 CONVENTIONAL; F53, 66 STRIPPED CHASSIS: SUPER DUTY SERIES(Cont.)									
-	1-5/8 "	R4133338	R4133338	R4166689	NR	-	-	-	-
-	1-1/8 "	R4133714	R4133715	R4166926	NR	-	-	-	-
-	15/16 "	R4133366	R4133367	R4166852	NR	-	-	-	-
-	1.09375	R4133484	R4133485	R4166819	NR	-	-	-	-
-	1-1/2 "	R4033607	R4033607	R4166818	NR	-	-	-	-
-	1-1/2 "	R4133257	R4133257	R415181	NR	-	-	-	-
-	1-1/2 "	R4133256	R4133256	R415181	NR	-	-	-	-
-	1-1/2 "	R4033607	R4033607	R4166818	NR	-	-	-	-
-	1-5/8 "	R4133338	R4133338	R4166689	NR	-	-	-	-
-	1-1/8 "	R4133714	R4133715	R4166926	NR	-	-	-	-
-	15/16 "	R4133366	R4133367	R4166852	NR	-	-	-	-
-	1.09375	R4133484	R4133485	R4166819	NR	-	-	-	-
-	1-1/2 "	R4033607	R4033607	R4166818	NR	-	-	-	-
-	1-1/2 "	R4133257	R4133257	R415181	NR	-	-	-	-
-	1-1/2 "	R4133256	R4133256	R415181	NR	-	-	-	-
-	1-1/2 "	R4033607	R4033607	R4166818	NR	-	-	-	-
-	1-5/8 "	R4133338	R4133338	R4166689	NR	-	-	-	-
-	1-1/8 "	R4133714	R4133715	R4166926	NR	-	-	-	-
-	15/16 "	R4133366	R4133367	R4166852	NR	-	-	-	-
-	1.09375	R4133484	R4133485	R4166819	NR	-	-	-	-
-	1-1/2 "	R4033607	R4033607	R4166818	NR	-	-	-	-
-	1-1/2 "	R4133256	R4133256	R415181	NR	-	-	-	-
-	1-1/2 "	R4133257	R4133257	R415181	NR	-	-	-	-
-	1-1/2 "	R4033607	R4033607	R4166818	NR	-	-	-	-
-	1-5/8 "	R4133338	R4133338	R4166689	NR	-	-	-	-
-	1-1/8 "	R4133714	R4133715	R4166926	NR	-	-	-	-
-	15/16 "	R4133366	R4133367	R4166852	NR	-	-	-	-
-	1.09375	R4133484	R4133485	R4166819	NR	-	-	-	-
-	1-1/2 "	R4033607	R4033607	R4166818	NR	-	-	-	-
-	1-1/2 "	R4133257	R4133257	R415181	NR	-	-	-	-
-	1-1/2 "	R4133256	R4133256	R415181	NR	-	-	-	-
-	1-1/2 "	R4033607	R4033607	R4166818	NR	-	-	-	-
-	1-5/8 "	R4133338	R4133338	R4166689	NR	-	-	-	-
-	1-1/8 "	R4133714	R4133715	R4166926	NR	-	-	-	-
-	15/16 "	R4133366	R4133367	R4166852	NR	-	-	-	-
-	1.09375	R4133484	R4133485	R4166819	NR	-	-	-	-
-	1-1/2 "	R4033607	R4033607	R4166818	NR	-	-	-	-
-	1-1/2 "	R4133256	R4133256	R415181	NR	-	-	-	-
-	1-1/2 "	R4133257	R4133257	R415181	NR	-	-	-	-

MAKE MODEL YEAR AXLE CODE AXLE WEIGHT	AXLE & BRK. TYPE	BRK. MFG.	BRAKE SIZE	FMSI	MERITOR DISC PAD OR BRAKE SHOE	MERITOR GUIDE PIN OR RETURN SPRING KIT	MERITOR CALIPER HWD. KIT OR RETURN SPRING KIT	MERITOR ADJUSTER KIT (LEFT WHEEL)	MERITOR ADJUSTER KIT (RIGHT WHEEL)
FORD(Cont.)									
F450, 500 CONVENTIONAL; F53, 66 STRIPPED CHASSIS: SUPER DUTY SERIES(Cont.)									
1969 Super Duty R150	Ra	KH	15 " x 5 "	4646 - 400	R700400	R40H595	R40H9220	R40H3538	R40H3539
	Ra	WG	15 " x 5 "	1252 - 346	R700346	R40H597	R40H9200	R40H3540	R40H3541
1968 Super Duty F046, F047	Fm	BX	13 " x 2-1/4 "	2043 - 36	Discontinued	R40H130	R404208	R40H3514	R40H3514
Super Duty F050, F055, F060	Fa	KH	14 " x 2-1/2 "	2060 - 361	Discontinued	R40H596	R40H9219	R40H3536	R40H3537
Super Duty R130	Ra	KH	15 " x 4 "	4647 - 401	R700401	R40H595	R40H9220	R40H3538	R40H3539
	Rm	BX	14.125 x 3-1/2 "	2041 - 22	N/A	R40H500	R40H9224	R404177	R404176
	Rm	BX	14.125 x 3-1/2 "	2041 - 22	N/A	R40H500	R40H9224	R404177	R404176
Super Duty R150	Ra	KH	15 " x 5 "	4646 - 400	R700400	R40H595	R40H9220	R40H3538	R40H3539
	Ra	WG	15 " x 5 "	1252 - 346	R700346	R40H597	R40H9200	R40H3540	R40H3541
F53 / F59 STRIPPED CHASSIS									
2003	Fd	TRW		7644 - D777	MD777	R40H15088	R4012268	NR	NR
15,000 - 18,000 lb GVWR	Fd	TRW		7644 - D777	MD777	R40H15088	R4012268	NR	NR
	Rd	TRW		7644 - D777	MD777	R40H15088	R4012268	NR	NR
20,500 lb GVW	Fd	TRW		7644 - D777	MD777	R40H15088	R4012268	NR	NR
	Rd	TRW		7644 - D777	MD777	R40H15088	R4012268	NR	NR
2002	Fd	TRW		7644 - D777	MD777	R40H15088	R4012268	NR	NR
15,000 - 18,000 lb GVWR	Fd	TRW		7644 - D777	MD777	R40H15088	R4012268	NR	NR
	Rd	TRW		7644 - D777	MD777	R40H15088	R4012268	NR	NR
20,500 lb GVW	Fd	TRW		7644 - D777	MD777	R40H15088	R4012268	NR	NR
	Rd	TRW		7644 - D777	MD777	R40H15088	R4012268	NR	NR
2001	Fd	TRW		7644 - D777	MD777	R40H15088	R4012268	NR	NR
15,000 - 18,000 lb GVWR	Fd	TRW		7644 - D777	MD777	R40H15088	R4012268	NR	NR
	Rd	TRW		7644 - D777	MD777	R40H15088	R4012268	NR	NR
20,500 lb GVW	Fd	TRW		7644 - D777	MD777	R40H15088	R4012268	NR	NR
	Rd	TRW		7644 - D777	MD777	R40H15088	R4012268	NR	NR
2000	Fd	TRW		7644 - D777	MD777	R40H15088	R4012268	NR	NR
15,000 - 18,000 lb GVWR	Fd	TRW		7644 - D777	MD777	R40H15088	R4012268	NR	NR
	Rd	TRW		7644 - D777	MD777	R40H15088	R4012268	NR	NR
20,500 lb GVW	Fd	TRW		7644 - D777	MD777	R40H15088	R4012268	NR	NR
	Rd	TRW		7644 - D777	MD777	R40H15088	R4012268	NR	NR
1999	Fd	TRW		7644 - D777	MD777	R40H15088	R4012268	NR	NR
15,000 - 18,000 lb GVWR	Fd	TRW		7644 - D777	MD777	R40H15088	R4012268	NR	NR
	Rd	TRW		7644 - D777	MD777	R40H15088	R4012268	NR	NR
20,500 lb GVW	Fd	TRW		7644 - D777	MD777	R40H15088	R4012268	NR	NR
	Rd	TRW		7644 - D777	MD777	R40H15088	R4012268	NR	NR
1998	Fd	TRW		7644 - D777	MD777	R40H15088	R4012268	NR	NR
15,000 - 18,000 lb GVWR	Fd	TRW		7644 - D777	MD777	R40H15088	R4012268	NR	NR
	Rd	TRW		7644 - D777	MD777	R40H15088	R4012268	NR	NR
20,500 lb GVW	Fd	TRW		7644 - D777	MD777	R40H15088	R4012268	NR	NR
	Rd	TRW		7644 - D777	MD777	R40H15088	R4012268	NR	NR
F550									
2007 4x2 Super duty	Fd	TRW		7972 - D1066	MD1066	-	-	NR	NR
	Fd	TRW		7972 - D1066	MD1066	-	-	NR	NR
	Rd	TRW		7972 - D1066	MD1066	-	-	NR	NR
4x4 Super duty	Fd	TRW		7972 - D1066	MD1066	-	-	NR	NR
	Fd	TRW		7972 - D1066	MD1066	-	-	NR	NR
	Rd	TRW		7972 - D1066	MD1066	-	-	NR	NR
2006 4x2 Super duty	Fd	TRW		7972 - D1066	MD1066	-	-	NR	NR

217 - Power Brakes Except Speed Control
223 - Power Brakes, Speed Control
387 - 10 Hole Rotor
399 - 7/19/05 - 2006 w/o Brake Control Valve
400 - 7/19/05 - 2006 with Brake Control Valve
405 - Rotor Only

MERITOR DRUM OR ROTOR NO.	CALIPER OR CYLINDER BORE SIZE	MERITOR CALIPER OR WHEEL CYLINDER (LEFT)	MERITOR CALIPER OR WHEEL CYLINDER (RIGHT)	MERITOR CALIPER OR WHEEL CYLINDER REPAIR KIT	MERITOR CALIPER PISTON	MERITOR MASTER CYLINDER	MERITOR MASTER CYLINDER KIT	MERITOR BRAKE HOSE (LEFT)	MERITOR BRAKE HOSE (RIGHT)
									FORD(Cont.)
									F450, 500 CONVENTIONAL; F53, 66 STRIPPED CHASSIS: SUPER DUTY SERIES(Cont.)
-	1-1/2 "	R4033607	R4033607	R4166818	NR	-	-	-	-
-	1-5/8 "	R4133338	R4133338	R4166689	NR	-	-	-	-
-	15/16 "	R4133366	R4133367	R4166852	NR	-	-	-	-
-	1.09375	R4133484	R4133485	R4166819	NR	-	-	-	-
-	1-1/2 "	R4033607	R4033607	R4166818	NR	-	-	-	-
-	1-1/2 "	R4133256	R4133256	R415181	NR	-	-	-	-
-	1-1/2 "	R4133257	R4133257	R415181	NR	-	-	-	-
-	1-1/2 "	R4033607	R4033607	R4166818	NR	-	-	-	-
-	1-5/8 "	R4133338	R4133338	R4166689	NR	-	-	-	-
									F53 / F59 STRIPPED CHASSIS
R44145325[405]	60mm	R4255862	R4255861	-	-	R4113648[217]	N/A	R4512427	R4512428
R44145325[405]	60mm	R4255862	R4255861	-	-	R4113649[223]	N/A	R4512427	R4512428
R44145325[405]	60mm	R4255862	R4255861	-	-	-	-	R4512420	-
R44145325[405]	60mm	R4255862	R4255861	-	-	R4112426	N/A	R4512427	R4512428
R44145325[405]	60mm	R4255862	R4255861	-	-	-	-	R4512421	-
R44145325[405]	60mm	R4255862	R4255861	-	-	R4113648[217]	N/A	R4512427	R4512428
R44145325[405]	60mm	R4255862	R4255861	-	-	R4113649[223]	N/A	R4512427	R4512428
R44145325[405]	60mm	R4255862	R4255861	-	-	-	-	R4512420	-
R44145325[405]	60mm	R4255862	R4255861	-	-	R4112426	N/A	R4512427	R4512428
R44145325[405]	60mm	R4255862	R4255861	-	-	-	-	R4512421	-
R44145325[405]	60mm	R4255862	R4255861	-	-	R4113648[217]	N/A	R4512427	R4512428
R44145325[405]	60mm	R4255862	R4255861	-	-	R4113649[223]	N/A	R4512427	R4512428
R44145325[405]	60mm	R4255862	R4255861	-	-	-	-	R4512420	-
R44145325[405]	60mm	R4255862	R4255861	-	-	R4112426	N/A	R4512427	R4512428
R44145325[405]	60mm	R4255862	R4255861	-	-	-	-	R4512421	-
R44145325[405]	60mm	R4255862	R4255861	-	-	R4113648[217]	N/A	R4512427	R4512428
R44145325[405]	60mm	R4255862	R4255861	-	-	R4113649[223]	N/A	R4512427	R4512428
R44145325[405]	60mm	R4255862	R4255861	-	-	-	-	R4512420	-
R44145325[405]	60mm	R4255862	R4255861	-	-	R4112426	N/A	R4512427	R4512428
R44145325[405]	60mm	R4255862	R4255861	-	-	-	-	R4512421	-
R44145325[405]	60mm	R4255862	R4255861	-	-	R4113648[217]	N/A	R4512427	R4512428
R44145325[405]	60mm	R4255862	R4255861	-	-	R4113649[223]	N/A	R4512427	R4512428
R44145325[405]	60mm	R4255862	R4255861	-	-	-	-	R4512420	-
R44145325[405]	60mm	R4255862	R4255861	-	-	R4112426	N/A	R4512427	R4512428
R44145325[405]	60mm	R4255862	R4255861	-	-	-	-	R4512421	-
									F550
R441713813[387]	60mm	R4212254	R4212253	-	-	R413013820[400]	-	R457013821	R457013822
R441713813[387]	60mm	R4212254	R4212253	-	-	R413013819[399]	-	R457013821	R457013822
R441713816[387]	60mm	R4212254	R4212253	-	-	-	-	-	-
R441713815[387]	60mm	R4212254	R4212253	-	-	R413013820[400]	-	R457013821	R457013822
R441713815[387]	60mm	R4212254	R4212253	-	-	R413013819[399]	-	R457013821	R457013822
R441713816[387]	60mm	R4212254	R4212253	-	-	-	-	-	-
R441713813[387]	60mm	R4212254	R4212253	-	-	R413013820[400]	-	R457013821	R457013822

MAKE MODEL YEAR AXLE CODE AXLE WEIGHT	AXLE & BRK. TYPE	BRK. MFG.	BRAKE SIZE	FMSI	MERITOR DISC PAD OR BRAKE SHOE	MERITOR GUIDE PIN OR RETURN SPRING KIT	MERITOR CALIPER HWD. KIT OR RETURN SPRING KIT	MERITOR ADJUSTER KIT (LEFT WHEEL)	MERITOR ADJUSTER KIT (RIGHT WHEEL)
FORD(Cont.)									
F550(Cont.)									
2006									
	Fd	TRW		7972 - D1066	MD1066	-	-	NR	NR
	Rd	TRW		7972 - D1066	MD1066	-	-	NR	NR
4x4 Super duty	Fd	TRW		7972 - D1066	MD1066	-	-	NR	NR
	Fd	TRW		7972 - D1066	MD1066	-	-	NR	NR
	Rd	TRW		7972 - D1066	MD1066	-	-	NR	NR
2005									
4x2 Super duty	Rd	TRW		7972 - D1066	MD1066	-	-	NR	NR
4x2 Super duty / Diesel									
Engine	Fd	TRW		7972 - D1066	MD1066	-	-	NR	NR
	Fd	TRW		7972 - D1066	MD1066	-	-	NR	NR
4x2 Super duty / Gas									
Engine	Fd	TRW		7972 - D1066	MD1066	-	-	NR	NR
	Fd	TRW		7972 - D1066	MD1066	-	-	NR	NR
4x4 Super duty	Rd	TRW		7972 - D1066	MD1066	-	-	NR	NR
4x4 Super duty / Diesel									
Engine	Fd	TRW		7972 - D1066	MD1066	-	-	NR	NR
	Fd	TRW		7972 - D1066	MD1066	-	-	NR	NR
4x4 Super duty / Gas									
Engine	Fd	TRW		7972 - D1066	MD1066	-	-	NR	NR
	Fd	TRW		7972 - D1066	MD1066	-	-	NR	NR
2004									
4x2 Super duty	Fd	TRW		7644 - D777	MD777	R40H15088	R4012268	NR	NR
	Rd	TRW		7644 - D777	MD777	R40H15088	R4012268	NR	NR
4x4 Super duty	Fd	TRW		7644 - D777	MD777	R40H15088	R4012268	NR	NR
	Rd	TRW		7644 - D777	MD777	R40H15088	R4012268	NR	NR
2003									
4x2 Super duty	Fd	TRW		7644 - D777	MD777	R40H15088	R4012268	NR	NR
	Fd	TRW		7644 - D777	MD777	R40H15088	R4012268	NR	NR
4x4 Super duty	Fd	TRW		7644 - D777	MD777	R40H15088	R4012268	NR	NR
	Fd	TRW		7644 - D777	MD777	R40H15088	R4012268	NR	NR
4x2 Super duty									
15,000 - 18,000 lb GVWR	Rd	TRW		7644 - D777	MD777	R40H15088	R4012268	NR	NR
4x4 Super duty									
15,000 - 18,000 lb GVWR	Rd	TRW		7644 - D777	MD777	R40H15088	R4012268	NR	NR
4x2 Super duty									
20,500 lb GVWR	Rd	TRW		7644 - D777	MD777	R40H15088	R4012268	NR	NR
4x4 Super duty									
20,500 lb GVWR	Rd	TRW		7644 - D777	MD777	R40H15088	R4012268	NR	NR
2002									
4x2 Super duty	Fd	TRW		7644 - D777	MD777	R40H15088	R4012268	NR	NR
	Fd	TRW		7644 - D777	MD777	R40H15088	R4012268	NR	NR
4x4 Super duty	Fd	TRW		7644 - D777	MD777	R40H15088	R4012268	NR	NR
	Fd	TRW		7644 - D777	MD777	R40H15088	R4012268	NR	NR
4x2 Super duty									
15,000 - 18,000 lb GVWR	Rd	TRW		7644 - D777	MD777	R40H15088	R4012268	NR	NR
4x4 Super duty									
15,000 - 18,000 lb GVWR	Rd	TRW		7644 - D777	MD777	R40H15088	R4012268	NR	NR
4x2 Super duty									
20,500 lb GVWR	Rd	TRW		7644 - D777	MD777	R40H15088	R4012268	NR	NR
4x4 Super duty									
20,500 lb GVWR	Rd	TRW		7644 - D777	MD777	R40H15088	R4012268	NR	NR
2001									
4x2 Super duty	Fd	TRW		7644 - D777	MD777	R40H15088	R4012268	NR	NR
	Fd	TRW		7644 - D777	MD777	R40H15088	R4012268	NR	NR
4x4 Super duty	Fd	TRW		7644 - D777	MD777	R40H15088	R4012268	NR	NR
	Fd	TRW		7644 - D777	MD777	R40H15088	R4012268	NR	NR
4x2 Super duty									
15,000 - 18,000 lb GVWR	Rd	TRW		7644 - D777	MD777	R40H15088	R4012268	NR	NR
4x4 Super duty									
15,000 - 18,000 lb GVWR	Rd	TRW		7644 - D777	MD777	R40H15088	R4012268	NR	NR
4x2 Super duty									
20,500 lb GVWR	Rd	TRW		7644 - D777	MD777	R40H15088	R4012268	NR	NR
4x4 Super duty									
20,500 lb GVWR	Rd	TRW		7644 - D777	MD777	R40H15088	R4012268	NR	NR

217 - Power Brakes Except Speed Control
223 - Power Brakes, Speed Control
387 - 10 Hole Rotor
395 - 2005 - 7/19/05 Gas Engine w/o Brake Control Valve
396 - 2005 - 7/19/05 Gas Engine with Brake Control Valve
397 - Diesel Engine w/o Speed Control
398 - Diesel Engine with Speed Control
399 - 7/19/05 - 2006 w/o Brake Control Valve
400 - 7/19/05 - 2006 with Brake Control Valve

MERITOR DRUM OR ROTOR NO.	CALIPER OR CYLINDER BORE SIZE	MERITOR CALIPER OR WHEEL CYLINDER (LEFT)	MERITOR CALIPER OR WHEEL CYLINDER (RIGHT)	MERITOR CALIPER OR WHEEL CYLINDER REPAIR KIT	MERITOR CALIPER PISTON	MERITOR MASTER CYLINDER	MERITOR MASTER CYLINDER KIT	MERITOR BRAKE HOSE (LEFT)	MERITOR BRAKE HOSE (RIGHT)
									FORD(Cont.)
									F550(Cont.)
R441713813[387]	60mm	R4212254	R4212253	-	-	R413013819[399]	-	R457013821	R457013822
R441713816[387]	60mm	R4212254	R4212253	-	-	-	-	-	-
R441713815[387]	60mm	R4212254	R4212253	-	-	R413013819[399]	-	R457013821	R457013822
R441713815[387]	60mm	R4212254	R4212253	-	-	R413013820[400]	-	R457013821	R457013822
R441713816[387]	60mm	R4212254	R4212253	-	-	-	-	-	-
R441713816[387]	60mm	R4212254	R4212253	-	-	-	-	-	-
R441713813[387]	60mm	R4212254	R4212253	-	-	R4113649[398]	-	R457013821	R457013822
R441713813[387]	60mm	R4212254	R4212253	-	-	R4113648[397]	-	R457013821	R457013822
R441713813[387]	60mm	R4212254	R4212253	-	-	R413013817[395]	-	R457013821	R457013822
R441713813[387]	60mm	R4212254	R4212253	-	-	R413013818[396]	-	R457013821	R457013822
R441713816[387]	60mm	R4212254	R4212253	-	-	-	-	-	-
R441713815[387]	60mm	R4212254	R4212253	-	-	R4113649[398]	-	R457013821	R457013822
R441713815[387]	60mm	R4212254	R4212253	-	-	R4113648[397]	-	R457013821	R457013822
R441713815[387]	60mm	R4212254	R4212253	-	-	R413013817[395]	-	R457013821	R457013822
R441713815[387]	60mm	R4212254	R4212253	-	-	R413013818[396]	-	R457013821	R457013822
R4466924	60mm	R4255862	R4255861	-	-	R4113648[217]	N/A	R44145028	R4512419
R44145325[405]	60mm	R4255862	R4255861	-	-	R4113649[223]	N/A	R44145028	R4512419
R4466924	60mm	R4255862	R4255861	-	-	-	-	-	-
R44145325[405]	60mm	R4255862	R4255861	-	-	-	-	-	-
R4466924	60mm	R4255862	R4255861	-	-	R4113648[217]	N/A	R44145028	R4512419
R4466924	60mm	R4255862	R4255861	-	-	R4113649[223]	N/A	R44145028	R4512419
R4466924	60mm	R4255862	R4255861	-	-	R4113649[223]	N/A	R44145028	R4512419
R4466924	60mm	R4255862	R4255861	-	-	R4113648[217]	N/A	R44145028	R4512419
R44145325[405]	60mm	R4255862	R4255861	-	-	-	-	R4512420	-
R44145325[405]	60mm	R4255862	R4255861	-	-	-	-	R4512420	-
R44145325[405]	60mm	R4255862	R4255861	-	-	-	-	R4512421	-
R44145325[405]	60mm	R4255862	R4255861	-	-	-	-	R4512421	-
R4466924	60mm	R4255862	R4255861	-	-	R4113648[217]	N/A	R44145028	R4512419
R4466924	60mm	R4255862	R4255861	-	-	R4113649[223]	N/A	R44145028	R4512419
R4466924	60mm	R4255862	R4255861	-	-	R4113649[223]	N/A	R44145028	R4512419
R4466924	60mm	R4255862	R4255861	-	-	R4113648[217]	N/A	R44145028	R4512419
R44145325[405]	60mm	R4255862	R4255861	-	-	-	-	R4512420	-
R44145325[405]	60mm	R4255862	R4255861	-	-	-	-	R4512420	-
R44145325[405]	60mm	R4255862	R4255861	-	-	-	-	R4512421	-
R44145325[405]	60mm	R4255862	R4255861	-	-	-	-	R4512421	-
R4466924	60mm	R4255862	R4255861	-	-	R4113648[217]	N/A	R44145028	R4512419
R4466924	60mm	R4255862	R4255861	-	-	R4113649[223]	N/A	R44145028	R4512419
R4466924	60mm	R4255862	R4255861	-	-	R4113649[223]	N/A	R44145028	R4512419
R4466924	60mm	R4255862	R4255861	-	-	R4113648[217]	N/A	R44145028	R4512419
R44145325[405]	60mm	R4255862	R4255861	-	-	-	-	R4512420	-
R44145325[405]	60mm	R4255862	R4255861	-	-	-	-	R4512420	-
R44145325[405]	60mm	R4255862	R4255861	-	-	-	-	R4512421	-
R44145325[405]	60mm	R4255862	R4255861	-	-	-	-	R4512421	-

405 - Rotor Only

MAKE MODEL YEAR AXLE CODE AXLE WEIGHT	AXLE & BRK. TYPE	BRK. MFG.	BRAKE SIZE	FMSI	MERITOR DISC PAD OR BRAKE SHOE	MERITOR GUIDE PIN OR RETURN SPRING KIT	MERITOR CALIPER HWD. KIT OR RETURN SPRING KIT	MERITOR ADJUSTER KIT (LEFT WHEEL)	MERITOR ADJUSTER KIT (RIGHT WHEEL)
FORD(Cont.)									
F550(Cont.)									
2000									
4x2 Super duty	Fd	TRW		7644 - D777	MD777	R40H15088	R4012268	NR	NR
	Fd	TRW		7644 - D777	MD777	R40H15088	R4012268	NR	NR
4x4 Super duty	Fd	TRW		7644 - D777	MD777	R40H15088	R4012268	NR	NR
	Fd	TRW		7644 - D777	MD777	R40H15088	R4012268	NR	NR
4x2 Super duty 15,000 - 18,000 lb GVWR	Rd	TRW		7644 - D777	MD777	R40H15088	R4012268	NR	NR
4x4 Super duty 15,000 - 18,000 lb GVWR	Rd	TRW		7644 - D777	MD777	R40H15088	R4012268	NR	NR
4x2 Super duty 20,500 lb GVWR	Rd	TRW		7644 - D777	MD777	R40H15088	R4012268	NR	NR
4x4 Super duty 20,500 lb GVWR	Rd	TRW		7644 - D777	MD777	R40H15088	R4012268	NR	NR
1999									
4x2 Super duty	Fd	TRW		7644 - D777	MD777	R40H15088	R4012268	NR	NR
	Fd	TRW		7644 - D777	MD777	R40H15088	R4012268	NR	NR
4x4 Super duty 4.88, 5.38 Gear Ratio From 3/22/99	Fd	TRW		7644 - D777	MD777	R40H15088	R4012268	NR	NR
	Fd	TRW		7644 - D777	MD777	R40H15088	R4012268	NR	NR
4x4 Super duty 4.88, 5.38 Gear Ratio Mono Beam up to 3/22/99	Fd	TRW		7644 - D777	MD777	R40H15088	R4012268	NR	NR
	Fd	TRW		7644 - D777	MD777	R40H15088	R4012268	NR	NR
4x2 Super duty 15,000 - 18,000 lb GVWR	Rd	TRW		7644 - D777	MD777	R40H15088	R4012268	NR	NR
4x4 Super duty 15,000 - 18,000 lb GVWR	Rd	TRW		7644 - D777	MD777	R40H15088	R4012268	NR	NR
4x2 Super duty 20,500 lb GVWR	Rd	TRW		7644 - D777	MD777	R40H15088	R4012268	NR	NR
4x4 Super duty 20,500 lb GVWR	Rd	TRW		7644 - D777	MD777	R40H15088	R4012268	NR	NR
F600 SERIES: CONVENTIONAL									
1995									
	Fd	DN		7141 - D224	MD224[340]	69310693	60050153	NR	NR
	Fd	DN		7149 - D236	MD236[341]	69310693	69310782	NR	NR
	Fd	DN		7149 - D236	MD236[341]	69310693	69310782	NR	NR
	Fd	DN		7149 - D236	MD236[341]	69310693	69310782	NR	NR
	Ra	LG	15 " x 5 "	4528A - 542	N/A	R40H618	NR	SP7888S	SP7888S
	Ra	LG	15 " x 5 "	4528A - 542	N/A	R40H618	NR	NR	NR
	Ra	LG	15 " x 6 "	4504A - 543	N/A	R40H618	NR	SP7887S	SP7887S
	Ra	LG	15 " x 6 "	4504A - 543	N/A	R40H618	NR	NR	NR
	Ra	LG	15 " x 7 "	4505A - 544	N/A	R40H618	NR	NR	NR
	Ra	LG	15 " x 7 "	4505A - 544	N/A	R40H618	NR	SP7887S	SP7887S
1994									
	Fd	DN		7141 - D224	MD224[340]	69310693	60050153	NR	NR
	Fd	DN		7149 - D236	MD236[341]	69310693	69310782	NR	NR
	Fd	DN		7149 - D236	MD236[341]	69310693	69310782	NR	NR
	Fd	DN		7149 - D236	MD236[341]	69310693	69310782	NR	NR
	Ra	LG	15 " x 5 "	4528A - 542	N/A	R40H618	NR	SP7888S	SP7888S
	Ra	LG	15 " x 5 "	4528A - 542	N/A	R40H618	NR	NR	NR
	Ra	LG	15 " x 6 "	4504A - 543	N/A	R40H618	NR	NR	NR
	Ra	LG	15 " x 6 "	4504A - 543	N/A	R40H618	NR	SP7887S	SP7887S
	Ra	LG	15 " x 7 "	4505A - 544	N/A	R40H618	NR	SP7887S	SP7887S
	Ra	LG	15 " x 7 "	4505A - 544	N/A	R40H618	NR	NR	NR
1993									
	Fd	DN		7149 - D236	MD236[341]	69310693	69310782	NR	NR
	Fd	DN		7141 - D224	MD224[340]	69310693	60050153	NR	NR
	Fd	DN		7149 - D236	MD236[341]	69310693	69310782	NR	NR
	Fd	DN		7149 - D236	MD236[341]	69310693	69310782	NR	NR
	Ra	LG	15 " x 5 "	4528A - 542	N/A	R40H618	NR	SP7888S	SP7888S
	Ra	LG	15 " x 5 "	4528A - 542	N/A	R40H618	NR	NR	NR
	Ra	LG	15 " x 6 "	4504A - 543	N/A	R40H618	NR	NR	NR
	Ra	LG	15 " x 6 "	4504A - 543	N/A	R40H618	NR	SP7887S	SP7887S

9 - 6 Stud, Dayton Rotor, Hat Style
186 - 10 Stud
204 - Right Hand; use E-4057 for Left Hand Expander Kits
37 - Also available as a New unit
187 - 6 Stud, 6.443" Hub
217 - Power Brakes Except Speed Control
41 - Aluminum piston
188 - 6 Stud, 9.251" Hub
223 - Power Brakes, Speed Control

MERITOR DRUM OR ROTOR NO.	CALIPER OR CYLINDER BORE SIZE	MERITOR CALIPER OR WHEEL CYLINDER (LEFT)	MERITOR CALIPER OR WHEEL CYLINDER (RIGHT)	MERITOR CALIPER OR WHEEL CYLINDER REPAIR KIT	MERITOR CALIPER PISTON	MERITOR MASTER CYLINDER	MERITOR MASTER CYLINDER KIT	MERITOR BRAKE HOSE (LEFT)	MERITOR BRAKE HOSE (RIGHT)
FORD(Cont.)									
F550(Cont.)									
R4466924	60mm	R4255862	R4255861	-	-	R4113648[217]	N/A	R44145028	R4512419
R4466924	60mm	R4255862	R4255861	-	-	R4113649[223]	N/A	R44145028	R4512419
R4466924	60mm	R4255862	R4255861	-	-	R4113649[223]	N/A	R44145028	R4512419
R4466924	60mm	R4255862	R4255861	-	-	R4113648[217]	N/A	R44145028	R4512419
R44145325[405]	60mm	R4255862	R4255861	-	-	-	-	R4512420	-
R44145325[405]	60mm	R4255862	R4255861	-	-	-	-	R4512420	-
R44145325[405]	60mm	R4255862	R4255861	-	-	-	-	R4512421	-
R44145325[405]	60mm	R4255862	R4255861	-	-	-	-	R4512421	-
R4466924	60mm	R4255862	R4255861	-	-	R4113648[217]	N/A	R44145028	R4512419
R4466924	60mm	R4255862	R4255861	-	-	R4113649[223]	N/A	R44145028	R4512419
R4466924	60mm	R4255862	R4255861	-	-	R4113649[223]	N/A	R44145028	R4512419
R4466924	60mm	R4255862	R4255861	-	-	R4113648[217]	N/A	R44145028	R4512419
R44145257[405]	60mm	R4255862	R4255861	-	-	R4113648[217]	N/A	R44145028	R4512419
R44145257[405]	60mm	R4255862	R4255861	-	-	R4113649[223]	N/A	R44145028	R4512419
R44145325[405]	60mm	R4255862	R4255861	-	-	-	-	R4512420	-
R44145325[405]	60mm	R4255862	R4255861	-	-	-	-	R4512420	-
R44145325[405]	60mm	R4255862	R4255861	-	-	-	-	R4512421	-
R44145325[405]	60mm	R4255862	R4255861	-	-	-	-	R4512421	-
F600 SERIES: CONVENTIONAL									
23-122700-002[9]	2-1/2 "	R424244X	R424244X[37]	60050266	69270757[41]	-	-	R4577461	R4577461
23-122691-002[188]	2-7/8 "	60050145X	60050145X[37]	60050146	69270702[41]	-	-	R4577461	R4577461
23-122703-002[186]	2-7/8 "	60050145X	60050145X[37]	60050146	69270702[41]	-	-	R4577461	R4577461
23-122743-002[187]	2-7/8 "	60050145X	60050145X[37]	60050146	69270702[41]	-	-	R4577461	R4577461
N/A	1-5/8 "	201185	201186[329]	SP7895S	NR	-	-	R4577870	R4577870
N/A	1-5/8 "	201181	201182	SP7895S	NR	-	-	R4577870	R4577870
N/A	1-3/4 "	201183X	201184X[329]	SP7873S	NR	-	-	R4577870	R4577870
N/A	1-3/4 "	201179X	201180X	SP7873S	SP7880S[204]	-	-	R4577870	R4577870
N/A	1-3/4 "	201179X	201180X	SP7873S	SP7880S[204]	-	-	R4577870	R4577870
N/A	1-3/4 "	201183X	201184X[329]	SP7873S	NR	-	-	R4577870	R4577870
23-122700-002[9]	2-1/2 "	R424244X	R424244X[37]	60050266	69270757[41]	-	-	R4577461	R4577461
23-122743-002[187]	2-7/8 "	60050145X	60050145X[37]	60050146	69270702[41]	-	-	R4577461	R4577461
23-122691-002[188]	2-7/8 "	60050145X	60050145X[37]	60050146	69270702[41]	-	-	R4577461	R4577461
23-122703-002[186]	2-7/8 "	60050145X	60050145X[37]	60050146	69270702[41]	-	-	R4577461	R4577461
N/A	1-5/8 "	201185	201186[329]	SP7895S	NR	-	-	R4577870	R4577870
N/A	1-5/8 "	201181	201182	SP7895S	NR	-	-	R4577870	R4577870
N/A	1-3/4 "	201179X	201180X	SP7873S	SP7880S[204]	-	-	R4577870	R4577870
N/A	1-3/4 "	201183X	201184X[329]	SP7873S	NR	-	-	R4577870	R4577870
N/A	1-3/4 "	201183X	201184X[329]	SP7873S	NR	-	-	R4577870	R4577870
N/A	1-3/4 "	201179X	201180X	SP7873S	SP7880S[204]	-	-	R4577870	R4577870
23-122691-002[188]	2-7/8 "	60050145X	60050145X[37]	60050146	69270702[41]	-	-	R4577461	R4577461
23-122700-002[9]	2-1/2 "	R424244X	R424244X[37]	60050266	69270757[41]	-	-	R4577461	R4577461
23-122703-002[186]	2-7/8 "	60050145X	60050145X[37]	60050146	69270702[41]	-	-	R4577461	R4577461
23-122743-002[187]	2-7/8 "	60050145X	60050145X[37]	60050146	69270702[41]	-	-	R4577461	R4577461
N/A	1-5/8 "	201185	201186[329]	SP7895S	NR	-	-	R4577870	R4577870
N/A	1-5/8 "	201181	201182	SP7895S	NR	-	-	R4577870	R4577870
N/A	1-3/4 "	201179X	201180X	SP7873S	SP7880S[204]	-	-	R4577870	R4577870
N/A	1-3/4 "	201183X	201184X[329]	SP7873S	NR	-	-	R4577870	R4577870

329 - Forward
405 - Rotor Only

340 - Use 69160457 for Disc Pad Retainer Clip

341 - Use 69160445 for Disc Pad Retainer Clip

MAKE MODEL YEAR AXLE CODE AXLE WEIGHT	AXLE & BRK. TYPE	BRK. MFG.	BRAKE SIZE	FMSI	MERITOR DISC PAD OR BRAKE SHOE	MERITOR GUIDE PIN OR RETURN SPRING KIT	MERITOR CALIPER HWD. KIT OR RETURN SPRING KIT	MERITOR ADJUSTER KIT (LEFT WHEEL)	MERITOR ADJUSTER KIT (RIGHT WHEEL)
FORD(Cont.)									
F600 SERIES: CONVENTIONAL(Cont.)									
1993									
	Ra	LG	15 " x 7 "	4505A - 544	N/A	R40H618	NR	NR	NR
	Ra	LG	15 " x 7 "	4505A - 544	N/A	R40H618	NR	SP7887S	SP7887S
1992									
	Fd	DN		7149 - D236	MD236[341]	69310693	69310782	NR	NR
	Fd	DN		7141 - D224	MD224[340]	69310693	60050153	NR	NR
	Fd	DN		7149 - D236	MD236[341]	69310693	69310782	NR	NR
	Fd	DN		7149 - D236	MD236[341]	69310693	69310782	NR	NR
	Ra	LG	15 " x 5 "	4528A - 542	N/A	R40H618	NR	SP7888S	SP7888S
	Ra	LG	15 " x 5 "	4528A - 542	N/A	R40H618	NR	NR	NR
	Ra	LG	15 " x 6 "	4504A - 543	N/A	R40H618	NR	SP7887S	SP7887S
	Ra	LG	15 " x 6 "	4504A - 543	N/A	R40H618	NR	NR	NR
	Ra	LG	15 " x 7 "	4505A - 544	N/A	R40H618	NR	NR	NR
	Ra	LG	15 " x 7 "	4505A - 544	N/A	R40H618	NR	SP7887S	SP7887S
1991									
	Fd	DN		7141 - D224	MD224[340]	69310693	60050153	NR	NR
	Fd	DN		7149 - D236	MD236[341]	69310693	69310782	NR	NR
	Fd	DN		7149 - D236	MD236[341]	69310693	69310782	NR	NR
	Fd	DN		7149 - D236	MD236[341]	69310693	69310782	NR	NR
	Ra	LG	15 " x 5 "	4528A - 542	N/A	R40H618	NR	SP7888S	SP7888S
	Ra	LG	15 " x 5 "	4528A - 542	N/A	R40H618	NR	NR	NR
	Ra	LG	15 " x 6 "	4504A - 543	N/A	R40H618	NR	SP7887S	SP7887S
	Ra	LG	15 " x 6 "	4504A - 543	N/A	R40H618	NR	NR	NR
	Ra	LG	15 " x 7 "	4505A - 544	N/A	R40H618	NR	SP7887S	SP7887S
	Ra	LG	15 " x 7 "	4505A - 544	N/A	R40H618	NR	NR	NR
1990									
	Fd	DN		7141 - D224	MD224[340]	69310693	60050153	NR	NR
	Fd	DN		7149 - D236	MD236[341]	69310693	69310782	NR	NR
	Fd	DN		7149 - D236	MD236[341]	69310693	69310782	NR	NR
	Fd	DN		7149 - D236	MD236[341]	69310693	69310782	NR	NR
	Ra	LG	15 " x 5 "	4528A - 542	N/A	R40H618	NR	SP7888S	SP7888S
	Ra	LG	15 " x 5 "	4528A - 542	N/A	R40H618	NR	NR	NR
	Ra	LG	15 " x 6 "	4504A - 543	N/A	R40H618	NR	NR	NR
	Ra	LG	15 " x 6 "	4504A - 543	N/A	R40H618	NR	SP7887S	SP7887S
	Ra	LG	15 " x 7 "	4505A - 544	N/A	R40H618	NR	SP7887S	SP7887S
	Ra	LG	15 " x 7 "	4505A - 544	N/A	R40H618	NR	NR	NR
1989									
	Fd	DN		7149 - D236	MD236[341]	69310693	69310782[43]	NR	NR
	Fd	DN		7141 - D224	MD224[340]	69310693	60050153	NR	NR
	Fd	DN		7149 - D236	MD236[341]	69310693	69310782[43]	NR	NR
	Fd	DN		7149 - D236	MD236[341]	69310693	69310782[43]	NR	NR
	Ra	LG	15 " x 5 "	4528A - 542	N/A	R40H618	NR	SP7888S	SP7888S
	Ra	LG	15 " x 5 "	4528A - 542	N/A	R40H618	NR	NR	NR
	Ra	LG	15 " x 6 "	4504A - 543	N/A	R40H618	NR	SP7887S	SP7887S
	Ra	LG	15 " x 6 "	4504A - 543	N/A	R40H618	NR	NR	NR
	Ra	LG	15 " x 7 "	4505A - 544	N/A	R40H618	NR	NR	NR
	Ra	LG	15 " x 7 "	4505A - 544	N/A	R40H618	NR	SP7887S	SP7887S
1988									
	Fd	DN		7141 - D224	MD224[340]	69310693	60050153	NR	NR
	Fd	DN		7149 - D236	MD236[341]	69310693	69310782[43]	NR	NR
	Fd	DN		7149 - D236	MD236[341]	69310693	69310782[43]	NR	NR
	Fd	DN		7149 - D236	MD236[341]	69310693	69310782[43]	NR	NR
	Ra	LG	15 " x 5 "	4528A - 542	N/A	R40H618	NR	SP7888S	SP7888S
	Ra	LG	15 " x 5 "	4528A - 542	N/A	R40H618	NR	NR	NR
	Ra	LG	15 " x 6 "	4504A - 543	N/A	R40H618	NR	NR	NR
	Ra	LG	15 " x 6 "	4504A - 543	N/A	R40H618	NR	SP7887S	SP7887S
	Ra	LG	15 " x 7 "	4505A - 544	N/A	R40H618	NR	SP7887S	SP7887S
	Ra	LG	15 " x 7 "	4505A - 544	N/A	R40H618	NR	NR	NR
1987									
	Fd	DN		7149 - D236	MD236[341]	69310693	69310782[43]	NR	NR
	Fd	DN		7149 - D236	MD236[341]	69310693	69310782[43]	NR	NR
	Fd	DN		7141 - D224	MD224[340]	69310693	60050153	NR	NR
	Fd	DN		7149 - D236	MD236[341]	69310693	69310782[43]	NR	NR
	Ra	LG	15 " x 5 "	4528A - 542	N/A	R40H618	NR	NR	NR
	Ra	LG	15 " x 5 "	4528A - 542	N/A	R40H618	NR	SP7888S	SP7888S

9 - 6 Stud, Dayton Rotor, Hat Style
43 - For Applications Taking A Longer Shim, Use R404151706
187 - 6 Stud, 6.443" Hub
37 - Also available as a New unit
53 - Power Brakes
188 - 6 Stud, 9.251" Hub
41 - Aluminum piston
186 - 10 Stud
204 - Right Hand; use E-4057 for Left Hand Expander Kits

MERITOR DRUM OR ROTOR NO.	CALIPER OR CYLINDER BORE SIZE	MERITOR CALIPER OR WHEEL CYLINDER (LEFT)	MERITOR CALIPER OR WHEEL CYLINDER (RIGHT)	MERITOR CALIPER OR WHEEL CYLINDER REPAIR KIT	MERITOR CALIPER PISTON	MERITOR MASTER CYLINDER	MERITOR MASTER CYLINDER KIT	MERITOR BRAKE HOSE (LEFT)	MERITOR BRAKE HOSE (RIGHT)
									FORD(Cont.)
									F600 SERIES: CONVENTIONAL(Cont.)
N/A	1-3/4 "	201179X	201180X	SP7873S	SP7880S[204]	-	-	R4577870	R4577870
N/A	1-3/4 "	201183X	201184X[329]	SP7873S	NR	-	-	R4577870	R4577870
23-122691-002[188]	2-7/8 "	60050145X	60050145X[37]	60050146	69270702[41]	-	-	R4577461	R4577461
23-122700-002[9]	2-1/2 "	R424244X	R424244X[37]	60050266	69270757[41]	-	-	R4577461	R4577461
23-122743-002[187]	2-7/8 "	60050145X	60050145X[37]	60050146	69270702[41]	-	-	R4577461	R4577461
23-122703-002[186]	2-7/8 "	60050145X	60050145X[37]	60050146	69270702[41]	-	-	R4577461	R4577461
N/A	1-5/8 "	201185	201186[329]	SP7895S	NR	-	-	R4577870	R4577870
N/A	1-5/8 "	201181	201182	SP7895S	NR	-	-	R4577870	R4577870
N/A	1-3/4 "	201183X	201184X[329]	SP7873S	NR	-	-	R4577870	R4577870
N/A	1-3/4 "	201179X	201180X	SP7873S	SP7880S[204]	-	-	R4577870	R4577870
N/A	1-3/4 "	201179X	201180X	SP7873S	SP7880S[204]	-	-	R4577870	R4577870
N/A	1-3/4 "	201183X	201184X[329]	SP7873S	NR	-	-	R4577870	R4577870
23-122700-002[9]	2-1/2 "	R424244X	R424244X[37]	60050266	69270757[41]	-	-	R4577461	R4577461
23-122691-002[188]	2-7/8 "	60050145X	60050145X[37]	60050146	69270702[41]	-	-	R4577461	R4577461
23-122743-002[187]	2-7/8 "	60050145X	60050145X[37]	60050146	69270702[41]	-	-	R4577461	R4577461
23-122703-002[186]	2-7/8 "	60050145X	60050145X[37]	60050146	69270702[41]	-	-	R4577461	R4577461
N/A	1-5/8 "	201185	201186[329]	SP7895S	NR	-	-	R4577870	R4577870
N/A	1-5/8 "	201181	201182	SP7895S	NR	-	-	R4577870	R4577870
N/A	1-3/4 "	201183X	201184X[329]	SP7873S	NR	-	-	R4577870	R4577870
N/A	1-3/4 "	201179X	201180X	SP7873S	SP7880S[204]	-	-	R4577870	R4577870
N/A	1-3/4 "	201183X	201184X[329]	SP7873S	NR	-	-	R4577870	R4577870
N/A	1-3/4 "	201179X	201180X	SP7873S	SP7880S[204]	-	-	R4577870	R4577870
23-122700-002[9]	2-1/2 "	R424244X	R424244X[37]	60050266	69270757[41]	R4111999[53]	R4122386	R4577461	R4577461
23-122703-002[186]	2-7/8 "	60050145X	60050145X[37]	60050146	69270702[41]	R4111999[53]	R4122386	R4577461	R4577461
23-122691-002[188]	2-7/8 "	60050145X	60050145X[37]	60050146	69270702[41]	R4111999[53]	R4122386	R4577461	R4577461
23-122743-002[187]	2-7/8 "	60050145X	60050145X[37]	60050146	69270702[41]	R4111999[53]	R4122386	R4577461	R4577461
N/A	1-5/8 "	201185	201186[329]	SP7895S	NR	-	-	R4577870	R4577870
N/A	1-5/8 "	201181	201182	SP7895S	NR	-	-	R4577870	R4577870
N/A	1-3/4 "	201179X	201180X	SP7873S	SP7880S[204]	-	-	R4577870	R4577870
N/A	1-3/4 "	201183X	201184X[329]	SP7873S	NR	-	-	R4577870	R4577870
N/A	1-3/4 "	201183X	201184X[329]	SP7873S	NR	-	-	R4577870	R4577870
N/A	1-3/4 "	201179X	201180X	SP7873S	SP7880S[204]	-	-	R4577870	R4577870
23-122691-002[188]	2-7/8 "	60050145X	60050145X[37]	60050146	69270702[41]	R4111999[53]	R4122386	R4577461	R4577461
23-122700-002[9]	2-1/2 "	R424244X	R424244X[37]	60050266	69270757[41]	R4111999[53]	R4122386	R4577461	R4577461
23-122743-002[187]	2-7/8 "	60050145X	60050145X[37]	60050146	69270702[41]	R4111999[53]	R4122386	R4577461	R4577461
23-122703-002[186]	2-7/8 "	60050145X	60050145X[37]	60050146	69270702[41]	R4111999[53]	R4122386	R4577461	R4577461
N/A	1-5/8 "	201185	201186[329]	SP7895S	NR	-	-	N/A	N/A
N/A	1-5/8 "	201181	201182	SP7895S	NR	-	-	N/A	N/A
N/A	1-3/4 "	201183X	201184X[329]	SP7873S	NR	-	-	N/A	N/A
N/A	1-3/4 "	201179X	201180X	SP7873S	SP7880S[204]	-	-	N/A	N/A
N/A	1-3/4 "	201179X	201180X	SP7873S	SP7880S[204]	-	-	N/A	N/A
N/A	1-3/4 "	201183X	201184X[329]	SP7873S	NR	-	-	N/A	N/A
23-122700-002[9]	2-1/2 "	R424244X	R424244X[37]	60050266	69270757[41]	R4111999[53]	R4122386	R4577461	R4577461
23-122743-002[187]	2-7/8 "	60050145X	60050145X[37]	60050146	69270702[41]	R4111999[53]	R4122386	R4577461	R4577461
23-122703-002[186]	2-7/8 "	60050145X	60050145X[37]	60050146	69270702[41]	R4111999[53]	R4122386	R4577461	R4577461
23-122691-002[188]	2-7/8 "	60050145X	60050145X[37]	60050146	69270702[41]	R4111999[53]	R4122386	R4577461	R4577461
N/A	1-5/8 "	201185	201186[329]	SP7895S	NR	-	-	N/A	N/A
N/A	1-5/8 "	201181	201182	SP7895S	NR	-	-	N/A	N/A
N/A	1-3/4 "	201179X	201180X	SP7873S	SP7880S[204]	-	-	N/A	N/A
N/A	1-3/4 "	201183X	201184X[329]	SP7873S	NR	-	-	N/A	N/A
N/A	1-3/4 "	201183X	201184X[329]	SP7873S	NR	-	-	N/A	N/A
N/A	1-3/4 "	201179X	201180X	SP7873S	SP7880S[204]	-	-	N/A	N/A
23-122691-002[188]	2-7/8 "	60050145X	60050145X[37]	60050146	69270702[41]	R4111999[53]	R4122386	R4577461	R4577461
23-122703-002[186]	2-7/8 "	60050145X	60050145X[37]	60050146	69270702[41]	R4111999[53]	R4122386	R4577461	R4577461
23-122700-002[9]	2-1/2 "	R424244X	R424244X[37]	60050266	69270757[41]	R4111999[53]	R4122386	R4577461	R4577461
23-122743-002[187]	2-7/8 "	60050145X	60050145X[37]	60050146	69270702[41]	R4111999[53]	R4122386	R4577461	R4577461
N/A	1-5/8 "	201181	201182	SP7895S	NR	-	-	N/A	N/A
N/A	1-5/8 "	201185	201186[329]	SP7895S	NR	-	-	N/A	N/A

329 - Forward

340 - Use 69160457 for Disc Pad Retainer Clip

341 - Use 69160445 for Disc Pad Retainer Clip

MAKE MODEL YEAR AXLE CODE AXLE WEIGHT	AXLE & BRK. TYPE	BRK. MFG.	BRAKE SIZE	FMSI	MERITOR DISC PAD OR BRAKE SHOE	MERITOR GUIDE PIN OR RETURN SPRING KIT	MERITOR CALIPER HWD. KIT OR RETURN SPRING KIT	MERITOR ADJUSTER KIT (LEFT WHEEL)	MERITOR ADJUSTER KIT (RIGHT WHEEL)
FORD(Cont.)									
F600 SERIES: CONVENTIONAL(Cont.)									
1987									
	Ra	LG	15 " x 6 "	4504A - 543	N/A	R40H618	NR	SP7887S	SP7887S
	Ra	LG	15 " x 6 "	4504A - 543	N/A	R40H618	NR	NR	NR
	Ra	LG	15 " x 7 "	4505A - 544	N/A	R40H618	NR	SP7887S	SP7887S
	Ra	LG	15 " x 7 "	4505A - 544	N/A	R40H618	NR	NR	NR
1986									
	Fd	DN		7141 - D224	MD224[340]	69310693	60050153	NR	NR
	Fd	DN		7149 - D236	MD236[341]	69310693	69310782	NR	NR
	Fd	DN		7149 - D236	MD236[341]	69310693	69310782	NR	NR
	Fd	DN		7149 - D236	MD236[341]	69310693	69310782	NR	NR
	Ra	LG	15 " x 5 "	4528A - 542	N/A	R40H618	NR	SP7888S	SP7888S
	Ra	LG	15 " x 5 "	4528A - 542	N/A	R40H618	NR	NR	NR
	Ra	LG	15 " x 6 "	4504A - 543	N/A	R40H618	NR	SP7887S	SP7887S
	Ra	LG	15 " x 6 "	4504A - 543	N/A	R40H618	NR	NR	NR
	Ra	LG	15 " x 6 "	4504A - 543	N/A	R40H618	NR	NR	NR
	Ra	LG	15 " x 6 "	4504A - 543	N/A	R40H618	NR	SP7887S	SP7887S
	Ra	LG	15 " x 7 "	4505A - 544	N/A	R40H618	NR	NR	NR
	Ra	LG	15 " x 7 "	4505A - 544	N/A	R40H618	NR	SP7887S	SP7887S
	Ra	LG	15 " x 7 "	4505A - 544	N/A	R40H618	NR	SP7887S	SP7887S
	Ra	LG	15 " x 7 "	4505A - 544	N/A	R40H618	NR	NR	NR
F050, F055, F060	Fa	KH	14 " x 2-1/2 "	2060 - 361	Discontinued	R40H596	R40H9219	R40H3536	R40H3537
F070	Fa	WG	15 " x 3 "	1245C - 321	R700321	R40H521	R40H9237	R40H3502	R40H3503
	Fa	WG	15 " x 3 "	1245C - 321	R700321	R40H521	R40H9237	R40H3502	R40H3503
	Fd	DN		7141 - D224	MD224[340]	69310693	60050153	NR	NR
F080, F090	Fd	DN		7149 - D236	MD236[341]	69310693	69310782	NR	NR
	Fd	DN		7149 - D236	MD236[341]	69310693	69310782	NR	NR
F090, F120	Fa	WG	15 " x 3 "	1245C - 321	R700321	R40H521	R40H9237	R40H3502	R40H3503
	Fa	WG	15 " x 3 "	1245C - 321	R700321	R40H521	R40H9237	R40H3502	R40H3503
R170, R175	Ra	KH	15 " x 5 "	4646 - 400	R700400	R40H595	R40H9220	R40H3538	R40H3539
	Ra	WG	15 " x 5 "	1252 - 346	R700346	R40H597	R40H9200	R40H3540	R40H3541
R185	Ra	WG	15 " x 6 "	4596 - 381	R700381	R40H597	R40H9200	R40H3540	R40H3541
	Ra	WG	15 " x 7 "	4597 - 383	R700383	R40H597	R40H9200	R40H3540	R40H3541
1985									
	Fd	DN		7141 - D224	MD224[340]	69310693	60050153	NR	NR
	Fd	DN		7149 - D236	MD236[341]	69310693	R40H5523	NR	NR
	Fd	DN		7149 - D236	MD236[341]	69310693	R40H5523	NR	NR
	Fd	DN		7149 - D236	MD236[341]	69310693	R40H5523	NR	NR
	Ra	LG	15 " x 5 "	4528A - 542	N/A	R40H618	NR	NR	NR
	Ra	LG	15 " x 5 "	4528A - 542	N/A	R40H618	NR	SP7888S	SP7888S
	Ra	LG	15 " x 6 "	4504A - 543	N/A	R40H618	NR	SP7887S	SP7887S
	Ra	LG	15 " x 6 "	4504A - 543	N/A	R40H618	NR	SP7888S	SP7888S
	Ra	LG	15 " x 6 "	4504A - 543	N/A	R40H618	NR	NR	NR
	Ra	LG	15 " x 6 "	4504A - 543	N/A	R40H618	NR	NR	NR
	Ra	LG	15 " x 7 "	4505A - 544	N/A	R40H618	NR	SP7887S	SP7887S
	Ra	LG	15 " x 7 "	4505A - 544	N/A	R40H618	NR	NR	NR
	Ra	LG	15 " x 7 "	4505A - 544	N/A	R40H618	NR	SP7888S	SP7888S
	Ra	LG	15 " x 7 "	4505A - 544	N/A	R40H618	NR	NR	NR
F050, F055, F060	Fa	KH	14 " x 2-1/2 "	2060 - 361	Discontinued	R40H596	R40H9219	R40H3536	R40H3537
F070	Fa	WG	15 " x 3 "	1245C - 321	R700321	R40H521	R40H9237	R40H3502	R40H3503
	Fa	WG	15 " x 3 "	1245C - 321	R700321	R40H521	R40H9237	R40H3502	R40H3503
	Fd	DN		7141 - D224	MD224[340]	69310693	60050153	NR	NR
F080, F090	Fd	DN		7149 - D236	MD236[341]	69310693	R40H5523	NR	NR
	Fd	DN		7149 - D236	MD236[341]	69310693	R40H5523	NR	NR
F090, F120	Fa	WG	15 " x 3 "	1245C - 321	R700321	R40H521	R40H9237	R40H3502	R40H3503
	Fa	WG	15 " x 3 "	1245C - 321	R700321	R40H521	R40H9237	R40H3502	R40H3503
R170, R175	Ra	KH	15 " x 5 "	4646 - 400	R700400	R40H595	R40H9220	R40H3538	R40H3539
	Ra	WG	15 " x 5 "	1252 - 346	R700346	R40H597	R40H9200	R40H3540	R40H3541
R185	Ra	WG	15 " x 6 "	4596 - 381	R700381	R40H597	R40H9200	R40H3540	R40H3541
	Ra	WG	15 " x 7 "	4597 - 383	R700383	R40H597	R40H9200	R40H3540	R40H3541
1984									
	Fd	DN		7149 - D236	MD236[341]	69310693	R40H5523	NR	NR
	Fd	DN		7141 - D224	MD224[340]	69310693	60050153	NR	NR
	Fd	DN		7149 - D236	MD236[341]	69310693	R40H5523	NR	NR
	Fd	DN		7149 - D236	MD236[341]	69310693	R40H5523	NR	NR
	Ra	LG	15 " x 5 "	4528A - 542	N/A	R40H618	NR	SP7888S	SP7888S

9 - 6 Stud, Dayton Rotor, Hat Style
53 - Power Brakes
188 - 6 Stud, 9.251" Hub

37 - Also available as a New unit
186 - 10 Stud
204 - Right Hand; use E-4057 for Left Hand Expander Kits

41 - Aluminum piston
187 - 6 Stud, 6.443" Hub
214 - Power Brakes, Split System

MERITOR DRUM OR ROTOR NO.	CALIPER OR CYLINDER BORE SIZE	MERITOR CALIPER OR WHEEL CYLINDER (LEFT)	MERITOR CALIPER OR WHEEL CYLINDER (RIGHT)	MERITOR CALIPER OR WHEEL CYLINDER REPAIR KIT	MERITOR CALIPER PISTON	MERITOR MASTER CYLINDER	MERITOR MASTER CYLINDER KIT	MERITOR BRAKE HOSE (LEFT)	MERITOR BRAKE HOSE (RIGHT)
									FORD(Cont.)
									F600 SERIES: CONVENTIONAL(Cont.)
N/A	1-3/4 "	201183X	201184X[329]	SP7873S	NR	-	-	N/A	N/A
N/A	1-3/4 "	201179X	201180X	SP7873S	SP7880S[204]	-	-	N/A	N/A
N/A	1-3/4 "	201183X	201184X[329]	SP7873S	NR	-	-	N/A	N/A
N/A	1-3/4 "	201179X	201180X	SP7873S	SP7880S[204]	-	-	N/A	N/A
23-122700-002[9]	2-1/2 "	R424244X	R424244X[37]	60050266	69270757[41]	R4111999[53]	R4122386	R4577461	R4577461
23-122743-002[187]	2-7/8 "	60050145X	60050145X[37]	60050146	69270702[41]	R4111999[53]	R4122386	R4577461	R4577461
23-122703-002[186]	2-7/8 "	60050145X	60050145X[37]	60050146	69270702[41]	R4111999[53]	R4122386	R4577461	R4577461
23-122691-002[188]	2-7/8 "	60050145X	60050145X[37]	60050146	69270702[41]	R4111999[53]	R4122386	R4577461	R4577461
N/A	1-5/8 "	201185	201186[329]	SP7895S	NR	-	-	N/A	N/A
N/A	1-5/8 "	201181	201182	SP7895S	NR	-	-	N/A	N/A
N/A	1-3/4 "	201183X	201184X[329]	SP7873S	NR	-	-	N/A	N/A
N/A	1-3/4 "	201179X	201180X	SP7873S	SP7880S[204]	-	-	N/A	N/A
N/A	1-3/4 "	201179X	201180X	SP7873S	SP7880S[204]	-	-	N/A	N/A
N/A	1-3/4 "	201183X	201184X[329]	SP7873S	NR	-	-	N/A	N/A
N/A	1-3/4 "	201179X	201180X	SP7873S	SP7880S[204]	-	-	N/A	N/A
N/A	1-3/4 "	201183X	201184X[329]	SP7873S	NR	-	-	N/A	N/A
N/A	1-3/4 "	201183X	201184X[329]	SP7873S	NR	-	-	N/A	N/A
N/A	1-3/4 "	201179X	201180X	SP7873S	SP7880S[204]	-	-	N/A	N/A
N/A	1.09375	R4133484	R4133485	R4166819	NR	-	-	-	-
N/A	1-1/8 "	R4133714	R4133715	R4166926	NR	-	-	-	-
N/A	1-1/8 "	R4133719	R4133718	R4166926	NR	-	-	-	-
23-122700-002[9]	2-1/2 "	R424244X	R424244X[37]	60050266	69270757[41]	R4111999[53]	R4122386	R4577461	R4577461
23-122691-002[188]	2-7/8 "	60050145X	60050145X[37]	60050146	69270702[41]	R4111999[53]	R4122386	R4577461	R4577461
23-122703-002[186]	2-7/8 "	60050145X	60050145X[37]	60050146	69270702[41]	R4111999[53]	R4122386	R4577461	R4577461
N/A	1-1/4 "	R4133581	R4133581	R4166923	NR	R4111999[214]	R4122386	-	-
N/A	1-1/4 "	R4133720	R4133721	R4166923	NR	R4111999[214]	R4122386	-	-
N/A	1-1/2 "	R4033607	R4033607	R4166818	NR	-	-	-	-
N/A	1-5/8 "	R4133338	R4133338	R4166689	NR	-	-	-	-
N/A	1-5/8 "	R4133338	R4133338	R4166689	NR	-	-	-	-
N/A	1-3/4 "	R4133400	R4133400	R4166917	NR	-	-	-	-
23-122700-002[9]	2-1/2 "	R424244X	R424244X[37]	60050266	69270757[41]	R4111999[53]	R4122386	R4577461	R4577461
23-122703-002[186]	2-7/8 "	60050145X	60050145X[37]	60050146	69270702[41]	R4111999[53]	R4122386	R4577461	R4577461
23-122743-002[187]	2-7/8 "	60050145X	60050145X[37]	60050146	69270702[41]	R4111999[53]	R4122386	R4577461	R4577461
23-122691-002[188]	2-7/8 "	60050145X	60050145X[37]	60050146	69270702[41]	R4111999[53]	R4122386	R4577461	R4577461
N/A	1-5/8 "	201181	201182	SP7895S	NR	-	-	N/A	N/A
N/A	1-5/8 "	201185	201186[329]	SP7895S	NR	-	-	N/A	N/A
N/A	1-3/4 "	201183X	201184X[329]	SP7873S	NR	-	-	N/A	N/A
N/A	1-5/8 "	201185	201186[329]	SP7895S	NR	-	-	N/A	N/A
N/A	1-5/8 "	201181	201182	SP7895S	NR	-	-	N/A	N/A
N/A	1-3/4 "	201179X	201180X	SP7873S	SP7880S[204]	-	-	N/A	N/A
N/A	1-3/4 "	201183X	201184X[329]	SP7873S	NR	-	-	N/A	N/A
N/A	1-5/8 "	201181	201182	SP7895S	NR	-	-	N/A	N/A
N/A	1-5/8 "	201185	201186[329]	SP7895S	NR	-	-	N/A	N/A
N/A	1-3/4 "	201179X	201180X	SP7873S	SP7880S[204]	-	-	N/A	N/A
N/A	1.09375	R4133484	R4133485	R4166819	NR	-	-	-	-
N/A	1-1/8 "	R4133719	R4133718	R4166926	NR	-	-	-	-
N/A	1-1/8 "	R4133714	R4133715	R4166926	NR	-	-	-	-
23-122700-002[9]	2-1/2 "	R424244X	R424244X[37]	60050266	69270757[41]	R4111999[53]	R4122386	R4577461	R4577461
23-122703-002[186]	2-7/8 "	60050145X	60050145X[37]	60050146	69270702[41]	R4111999[53]	R4122386	R4577461	R4577461
23-122691-002[188]	2-7/8 "	60050145X	60050145X[37]	60050146	69270702[41]	R4111999[53]	R4122386	R4577461	R4577461
N/A	1-1/4 "	R4133581	R4133581	R4166923	NR	R4111999[214]	R4122386	-	-
N/A	1-1/4 "	R4133720	R4133721	R4166923	NR	R4111999[214]	R4122386	-	-
N/A	1-1/2 "	R4033607	R4033607	R4166818	NR	-	-	-	-
N/A	1-5/8 "	R4133338	R4133338	R4166689	NR	-	-	-	-
N/A	1-5/8 "	R4133338	R4133338	R4166689	NR	-	-	-	-
N/A	1-3/4 "	R4133400	R4133400	R4166917	NR	-	-	-	-
23-122691-002[188]	2-7/8 "	60050145X	60050145X[37]	60050146	69270702[41]	R4111999[53]	R4122386	R4577461	R4577461
23-122700-002[9]	2-1/2 "	R424244X	R424244X[37]	60050266	69270757[41]	R4111999[53]	R4122386	R4577461	R4577461
23-122743-002[187]	2-7/8 "	60050145X	60050145X[37]	60050146	69270702[41]	R4111999[53]	R4122386	R4577461	R4577461
23-122703-002[186]	2-7/8 "	60050145X	60050145X[37]	60050146	69270702[41]	R4111999[53]	R4122386	R4577461	R4577461
N/A	1-5/8 "	201185	201186[329]	SP7895S	NR	-	-	N/A	N/A

329 - Forward

340 - Use 69160457 for Disc Pad Retainer Clip

341 - Use 69160445 for Disc Pad Retainer Clip

MAKE MODEL YEAR AXLE CODE AXLE WEIGHT	AXLE & BRK. TYPE	BRK. MFG.	BRAKE SIZE	FMSI	MERITOR DISC PAD OR BRAKE SHOE	MERITOR GUIDE PIN OR RETURN SPRING KIT	MERITOR CALIPER HWD. KIT OR RETURN SPRING KIT	MERITOR ADJUSTER KIT (LEFT WHEEL)	MERITOR ADJUSTER KIT (RIGHT WHEEL)
FORD(Cont.)									
F600 SERIES: CONVENTIONAL(Cont.)									
1984									
	Ra	LG	15 " x 5 "	4528A - 542	N/A	R40H618	NR	NR	NR
	Ra	LG	15 " x 6 "	4504A - 543	N/A	R40H618	NR	NR	NR
	Ra	LG	15 " x 6 "	4504A - 543	N/A	R40H618	NR	SP7887S	SP7887S
	Ra	LG	15 " x 6 "	4504A - 543	N/A	R40H618	NR	SP7888S	SP7888S
	Ra	LG	15 " x 6 "	4504A - 543	N/A	R40H618	NR	NR	NR
	Ra	LG	15 " x 7 "	4505A - 544	N/A	R40H618	NR	SP7887S	SP7887S
	Ra	LG	15 " x 7 "	4505A - 544	N/A	R40H618	NR	SP7888S	SP7888S
	Ra	LG	15 " x 7 "	4505A - 544	N/A	R40H618	NR	NR	NR
	Ra	LG	15 " x 7 "	4505A - 544	N/A	R40H618	NR	NR	NR
F050, F055, F060	Fa	KH	14 " x 2-1/2 "	2060 - 361	Discontinued	R40H596	R40H9219	R40H3536	R40H3537
F070	Fa	WG	15 " x 3 "	1245C - 321	R700321	R40H521	R40H9237	R40H3502	R40H3503
	Fa	WG	15 " x 3 "	1245C - 321	R700321	R40H521	R40H9237	R40H3502	R40H3503
	Fd	DN		7141 - D224	MD224[340]	69310693	60050153	NR	NR
F080, F090	Fd	DN		7149 - D236	MD236[341]	69310693	R40H5523	NR	NR
	Fd	DN		7149 - D236	MD236[341]	69310693	R40H5523	NR	NR
F090, F120	Fa	WG	15 " x 3 "	1245C - 321	R700321	R40H521	R40H9237	R40H3502	R40H3503
	Fa	WG	15 " x 3 "	1245C - 321	R700321	R40H521	R40H9237	R40H3502	R40H3503
R170, R175	Ra	KH	15 " x 5 "	4646 - 400	R700400	R40H595	R40H9220	R40H3538	R40H3539
	Ra	WG	15 " x 5 "	1252 - 346	R700346	R40H597	R40H9200	R40H3540	R40H3541
R185	Ra	WG	15 " x 6 "	4596 - 381	R700381	R40H597	R40H9200	R40H3540	R40H3541
	Ra	WG	15 " x 7 "	4597 - 383	R700383	R40H597	R40H9200	R40H3540	R40H3541
1983									
	Ra	LG	15 " x 6 "	4504A - 543	N/A	R40H618	NR	NR	NR
	Ra	LG	15 " x 6 "	4504A - 543	N/A	R40H618	NR	SP7888S	SP7888S
	Ra	LG	15 " x 7 "	4505A - 544	N/A	R40H618	NR	SP7888S	SP7888S
	Ra	LG	15 " x 7 "	4505A - 544	N/A	R40H618	NR	NR	NR
F050, F055, F060	Fa	KH	14 " x 2-1/2 "	2060 - 361	Discontinued	R40H596	R40H9219	R40H3536	R40H3537
F070	Fa	WG	15 " x 3 "	1245C - 321	R700321	R40H521	R40H9237	R40H3502	R40H3503
	Fa	WG	15 " x 3 "	1245C - 321	R700321	R40H521	R40H9237	R40H3502	R40H3503
	Fd	DN		7141 - D224	MD224[340]	69310693	60050153	NR	NR
F070, F090, F120	Fa	WG	15 " x 3 "	1245C - 321	R700321	R40H521	R40H9237	R40H3502	R40H3503
	Fa	WG	15 " x 3 "	1245C - 321	R700321	R40H521	R40H9237	R40H3502	R40H3503
F080, F090	Fd	DN		7149 - D236	MD236[341]	69310693	R40H5523	NR	NR
	Fd	DN		7149 - D236	MD236[341]	69310693	R40H5523	NR	NR
F090, F120	Fa	WG	15 " x 3 "	1245C - 321	R700321	R40H521	R40H9237	R40H3502	R40H3503
	Fa	WG	15 " x 3 "	1245C - 321	R700321	R40H521	R40H9237	R40H3502	R40H3503
R170, R175	Ra	KH	15 " x 5 "	4646 - 400	R700400	R40H595	R40H9220	R40H3538	R40H3539
	Ra	WG	15 " x 5 "	1252 - 346	R700346	R40H597	R40H9200	R40H3540	R40H3541
R185	Ra	WG	15 " x 6 "	4596 - 381	R700381	R40H597	R40H9200	R40H3540	R40H3541
	Ra	WG	15 " x 7 "	4597 - 383	R700383	R40H597	R40H9200	R40H3540	R40H3541
1982									
	Ra	LG	15 " x 6 "	4504A - 543	N/A	R40H618	NR	NR	NR
	Ra	LG	15 " x 6 "	4504A - 543	N/A	R40H618	NR	SP7888S	SP7888S
	Ra	LG	15 " x 7 "	4505A - 544	N/A	R40H618	NR	SP7888S	SP7888S
	Ra	LG	15 " x 7 "	4505A - 544	N/A	R40H618	NR	NR	NR
F050, F055, F060	Fa	KH	14 " x 2-1/2 "	2060 - 361	Discontinued	R40H596	R40H9219	R40H3536	R40H3537
F070	Fa	WG	15 " x 3 "	1245C - 321	R700321	R40H521	R40H9237	R40H3502	R40H3503
	Fa	WG	15 " x 3 "	1245C - 321	R700321	R40H521	R40H9237	R40H3502	R40H3503
	Fd	DN		7141 - D224	MD224[340]	69310693	60050153	NR	NR
F070, F090, F120	Fa	WG	15 " x 3 "	1245C - 321	R700321	R40H521	R40H9237	R40H3502	R40H3503
	Fa	WG	15 " x 3 "	1245C - 321	R700321	R40H521	R40H9237	R40H3502	R40H3503
F080, F090	Fd	DN		7149 - D236	MD236[341]	69310693	R40H5523	NR	NR
	Fd	DN		7149 - D236	MD236[341]	69310693	R40H5523	NR	NR
F090, F120	Fa	WG	15 " x 3 "	1245C - 321	R700321	R40H521	R40H9237	R40H3502	R40H3503
	Fa	WG	15 " x 3 "	1245C - 321	R700321	R40H521	R40H9237	R40H3502	R40H3503
R170, R175	Ra	KH	15 " x 5 "	4646 - 400	R700400	R40H595	R40H9220	R40H3538	R40H3539
	Ra	WG	15 " x 5 "	1252 - 346	R700346	R40H597	R40H9200	R40H3540	R40H3541
R185	Ra	WG	15 " x 6 "	4596 - 381	R700381	R40H597	R40H9200	R40H3540	R40H3541
	Ra	WG	15 " x 7 "	4597 - 383	R700383	R40H597	R40H9200	R40H3540	R40H3541
1981									
	Ra	LG	15 " x 6 "	4504A - 543	N/A	R40H618	NR	NR	NR
	Ra	LG	15 " x 6 "	4504A - 543	N/A	R40H618	NR	SP7888S	SP7888S
	Ra	LG	15 " x 7 "	4505A - 544	N/A	R40H618	NR	SP7888S	SP7888S

9 - 6 Stud, Dayton Rotor, Hat Style
53 - Power Brakes
204 - Right Hand; use E-4057 for Left Hand Expander Kits
37 - Also available as a New unit
186 - 10 Stud
214 - Power Brakes, Split System
41 - Aluminum piston
188 - 6 Stud, 9.251" Hub
219 - Power Brakes, Gasoline Engine with Vacuum Booster

MERITOR DRUM OR ROTOR NO.	CALIPER OR CYLINDER BORE SIZE	MERITOR CALIPER OR WHEEL CYLINDER (LEFT)	MERITOR CALIPER OR WHEEL CYLINDER (RIGHT)	MERITOR CALIPER OR WHEEL CYLINDER REPAIR KIT	MERITOR CALIPER PISTON	MERITOR MASTER CYLINDER	MERITOR MASTER CYLINDER KIT	MERITOR BRAKE HOSE (LEFT)	MERITOR BRAKE HOSE (RIGHT)
									FORD(Cont.)
									F600 SERIES: CONVENTIONAL(Cont.)
N/A	1-5/8 "	201181	201182	SP7895S	NR	-	-	N/A	N/A
N/A	1-3/4 "	201179X	201180X	SP7873S	SP7880S[204]	-	-	N/A	N/A
N/A	1-3/4 "	201183X	201184X[329]	SP7873S	NR	-	-	N/A	N/A
N/A	1-5/8 "	201185	201186[329]	SP7895S	NR	-	-	N/A	N/A
N/A	1-5/8 "	201181	201182	SP7895S	NR	-	-	N/A	N/A
N/A	1-3/4 "	201183X	201184X[329]	SP7873S	NR	-	-	N/A	N/A
N/A	1-5/8 "	201185	201186[329]	SP7895S	NR	-	-	N/A	N/A
N/A	1-5/8 "	201181	201182	SP7895S	NR	-	-	N/A	N/A
N/A	1-3/4 "	201179X	201180X	SP7873S	SP7880S[204]	-	-	N/A	N/A
N/A	1.09375	R4133484	R4133485	R4166819	NR	-	-	-	-
N/A	1-1/8 "	R4133714	R4133715	R4166926	NR	-	-	-	-
N/A	1-1/8 "	R4133719	R4133718	R4166926	NR	-	-	-	-
23-122700-002[9]	2-1/2 "	R424244X	R424244X[37]	60050266	69270757[41]	R4111999[53]	R4122386	R4577461	R4577461
23-122691-002[188]	2-7/8 "	60050145X	60050145X[37]	60050146	69270702[41]	R4111999[53]	R4122386	R4577461	R4577461
23-122703-002[186]	2-7/8 "	60050145X	60050145X[37]	60050146	69270702[41]	R4111999[53]	R4122386	R4577461	R4577461
N/A	1-1/4 "	R4133720	R4133721	R4166923	NR	R4111999[214]	R4122386	-	-
N/A	1-1/4 "	R4133581	R4133581	R4166923	NR	R4111999[214]	R4122386	-	-
N/A	1-1/2 "	R4033607	R4033607	R4166818	NR	-	-	-	-
N/A	1-5/8 "	R4133338	R4133338	R4166689	NR	-	-	-	-
N/A	1-5/8 "	R4133338	R4133338	R4166689	NR	-	-	-	-
N/A	1-3/4 "	R4133400	R4133400	R4166917	NR	-	-	-	-
N/A	1-5/8 "	201181	201182	SP7895S	NR	-	-	R4577147	R4577147
N/A	1-5/8 "	201185	201186[329]	SP7895S	NR	-	-	R4577147	R4577147
N/A	1-5/8 "	201185	201186[329]	SP7895S	NR	-	-	R4577147	R4577147
N/A	1-5/8 "	201181	201182	SP7895S	NR	-	-	R4577147	R4577147
N/A	1.09375	R4133484	R4133485	R4166819	NR	R4111629[53]	R4122484	R4577460	R4577460
N/A	1-1/8 "	R4133719	R4133718	R4166926	NR	R4111992[214]	R4122386	R4577452	R4577453
N/A	1-1/8 "	R4133714	R4133715	R4166926	NR	R4111992[214]	R4122386	R4577452	R4577453
23-122700-002[9]	2-1/2 "	R424244X	R424244X[37]	60050266	69270757[41]	R4111992[214]	R4122386	R4577452	R4577453
N/A	1-1/8 "	R4133714	R4133715	R4166926	NR	R4111911[219]	R4122387	R4577454	R4577455
N/A	1-1/8 "	R4133716	R4133717	R4166926	NR	R4111911[219]	R4122387	R4577454	R4577455
23-122703-002[186]	2-7/8 "	60050145X	60050145X[37]	60050146	69270702[41]	R4111992[214]	R4122386	R4577452	R4577453
23-122691-002[188]	2-7/8 "	60050145X	60050145X[37]	60050146	69270702[41]	R4111992[214]	R4122386	R4577452	R4577453
N/A	1-1/4 "	R4133720	R4133721	R4166923	NR	R4111992[214]	R4122386	R4577452	R4577453
N/A	1-1/4 "	R4133581	R4133581	R4166923	NR	R4111992[214]	R4122386	R4577452	R4577453
N/A	1-1/2 "	R4033607	R4033607	R4166818	NR	-	-	R4577147	R4577147
N/A	1-5/8 "	R4133338	R4133338	R4166689	NR	-	-	R4577147	R4577147
N/A	1-5/8 "	R4133338	R4133338	R4166689	NR	-	-	R4577147	R4577147
N/A	1-3/4 "	R4133400	R4133400	R4166917	NR	-	-	R4577147	R4577147
N/A	1-5/8 "	201181	201182	SP7895S	NR	-	-	R4577147	R4577147
N/A	1-5/8 "	201185	201186[329]	SP7895S	NR	-	-	R4577147	R4577147
N/A	1-5/8 "	201185	201186[329]	SP7895S	NR	-	-	R4577147	R4577147
N/A	1-5/8 "	201181	201182	SP7895S	NR	-	-	R4577147	R4577147
N/A	1.09375	R4133484	R4133485	R4166819	NR	R4111629[53]	R4122484	R4577460	R4577460
N/A	1-1/8 "	R4133714	R4133715	R4166926	NR	R4111992[214]	R4122386	R4577452	R4577453
N/A	1-1/8 "	R4133719	R4133718	R4166926	NR	R4111992[214]	R4122386	R4577452	R4577453
23-122700-002[9]	2-1/2 "	R424244X	R424244X[37]	60050266	69270757[41]	R4111992[214]	R4122386	R4577452	R4577453
N/A	1-1/8 "	R4133717	R4133716	R4166926	NR	R4111911[219]	R4122387	R4577454	R4577455
N/A	1-1/8 "	R4133714	R4133715	R4166926	NR	R4111911[219]	R4122387	R4577454	R4577455
23-122691-002[188]	2-7/8 "	60050145X	60050145X[37]	60050146	69270702[41]	R4111992[214]	R4122386	R4577452	R4577453
23-122703-002[186]	2-7/8 "	60050145X	60050145X[37]	60050146	69270702[41]	R4111992[214]	R4122386	R4577452	R4577453
N/A	1-1/4 "	R4133581	R4133581	R4166923	NR	R4111999[214]	R4122386	R4577452	R4577453
N/A	1-1/4 "	R4133720	R4133721	R4166923	NR	R4111999[214]	R4122386	R4577452	R4577453
N/A	1-1/2 "	R4033607	R4033607	R4166818	NR	-	-	R4577147	R4577147
N/A	1-5/8 "	R4133338	R4133338	R4166689	NR	-	-	R4577147	R4577147
N/A	1-5/8 "	R4133338	R4133338	R4166689	NR	-	-	R4577147	R4577147
N/A	1-3/4 "	R4133400	R4133400	R4166917	NR	-	-	R4577147	R4577147
N/A	1-5/8 "	201181	201182	SP7895S	NR	-	-	R4577147	R4577147
N/A	1-5/8 "	201185	201186[329]	SP7895S	NR	-	-	R4577147	R4577147
N/A	1-5/8 "	201185	201186[329]	SP7895S	NR	-	-	R4577147	R4577147

329 - Forward

340 - Use 69160457 for Disc Pad Retainer Clip

341 - Use 69160445 for Disc Pad Retainer Clip

MAKE MODEL YEAR AXLE CODE AXLE WEIGHT	AXLE & BRK. TYPE	BRK. MFG.	BRAKE SIZE	FMSI	MERITOR DISC PAD OR BRAKE SHOE	MERITOR GUIDE PIN OR RETURN SPRING KIT	MERITOR CALIPER HWD. KIT OR RETURN SPRING KIT	MERITOR ADJUSTER KIT (LEFT WHEEL)	MERITOR ADJUSTER KIT (RIGHT WHEEL)
FORD(Cont.)									
F600 SERIES: CONVENTIONAL(Cont.)									
1981									
	Ra	LG	15 " x 7 "	4505A - 544	N/A	R40H618	NR	NR	NR
F050, F055, F060	Fa	KH	14 " x 2-1/2 "	2060 - 361	Discontinued	R40H596	R40H9219	R40H3536	R40H3537
F070	Fa	WG	15 " x 3 "	1245C - 321	R700321	R40H521	R40H9237	R40H3502	R40H3503
	Fa	WG	15 " x 3 "	1245C - 321	R700321	R40H521	R40H9237	R40H3502	R40H3503
	Fd	DN		7141 - D224	MD224[340]	69310693	60050153	NR	NR
F070, F090, F120	Fa	WG	15 " x 3 "	1245C - 321	R700321	R40H521	R40H9237	R40H3502	R40H3503
	Fa	WG	15 " x 3 "	1245C - 321	R700321	R40H521	R40H9237	R40H3502	R40H3503
F080, F090	Fd	DN		7149 - D236	MD236[341]	69310693	R40H5523	NR	NR
	Fd	DN		7149 - D236	MD236[341]	69310693	R40H5523	NR	NR
F090, F120	Fa	WG	15 " x 3 "	1245C - 321	R700321	R40H521	R40H9237	R40H3502	R40H3503
	Fa	WG	15 " x 3 "	1245C - 321	R700321	R40H521	R40H9237	R40H3502	R40H3503
R170, R175	Ra	KH	15 " x 5 "	4646 - 400	R700400	R40H595	R40H9220	R40H3538	R40H3539
	Ra	WG	15 " x 5 "	1252 - 346	R700346	R40H597	R40H9200	R40H3540	R40H3541
R185	Ra	WG	15 " x 6 "	4596 - 381	R700381	R40H597	R40H9200	R40H3540	R40H3541
	Ra	WG	15 " x 7 "	4597 - 383	R700383	R40H597	R40H9200	R40H3540	R40H3541
1980									
	Ra	LG	15 " x 6 "	4504A - 543	N/A	R40H618	NR	NR	NR
	Ra	LG	15 " x 6 "	4504A - 543	N/A	R40H618	NR	SP7888S	SP7888S
	Ra	LG	15 " x 7 "	4505A - 544	N/A	R40H618	NR	SP7888S	SP7888S
	Ra	LG	15 " x 7 "	4505A - 544	N/A	R40H618	NR	NR	NR
F050, F055, F060	Fa	KH	14 " x 2-1/2 "	2060 - 361	Discontinued	R40H596	R40H9219	R40H3536	R40H3537
F070	Fa	WG	15 " x 3 "	1245C - 321	R700321	R40H521	R40H9237	R40H3502	R40H3503
	Fa	WG	15 " x 3 "	1245C - 321	R700321	R40H521	R40H9237	R40H3502	R40H3503
	Fd	DN		7141 - D224	MD224[340]	69310693	60050153	NR	NR
F070, F090, F120	Fa	WG	15 " x 3 "	1245C - 321	R700321	R40H521	R40H9237	R40H3502	R40H3503
	Fa	WG	15 " x 3 "	1245C - 321	R700321	R40H521	R40H9237	R40H3502	R40H3503
F080, F090	Fd	DN		7149 - D236	MD236[341]	69310693	R40H5523	NR	NR
	Fd	DN		7149 - D236	MD236[341]	69310693	R40H5523	NR	NR
F090, F120	Fa	WG	15 " x 3 "	1245C - 321	R700321	R40H521	R40H9237	R40H3502	R40H3503
	Fa	WG	15 " x 3 "	1245C - 321	R700321	R40H521	R40H9237	R40H3502	R40H3503
R170, R175	Ra	KH	15 " x 5 "	4646 - 400	R700400	R40H595	R40H9220	R40H3538	R40H3539
	Ra	WG	15 " x 5 "	1252 - 346	R700346	R40H597	R40H9200	R40H3540	R40H3541
R185	Ra	WG	15 " x 6 "	4596 - 381	R700381	R40H597	R40H9200	R40H3540	R40H3541
	Ra	WG	15 " x 7 "	4597 - 383	R700383	R40H597	R40H9200	R40H3540	R40H3541
1979									
	Fa				R700321	R40H521	R40H9237	R40H3502	R40H3503
	Fa				R700321	R40H521	R40H9237	R40H3502	R40H3503
	Fa				R700321	R40H521	R40H9237	R40H3502	R40H3503
	Fa				R700321	R40H521	R40H9237	R40H3502	R40H3503
F050, F055, F060	Fa	KH	14 " x 2-1/2 "	2060 - 361	Discontinued	R40H596	R40H9219	R40H3536	R40H3537
F070	Fa	WG	15 " x 3 "	1245C - 321	R700321	R40H521	R40H9237	R40H3502	R40H3503
	Fa	WG	15 " x 3 "	1245C - 321	R700321	R40H521	R40H9237	R40H3502	R40H3503
	Fd	DN		7141 - D224	MD224[340]	69310693	60050153	NR	NR
F080, F090	Fd	DN		7149 - D236	MD236[341]	69310693	R40H5523	NR	NR
	Fd	DN		7149 - D236	MD236[341]	69310693	R40H5523	NR	NR
R170, R175	Ra	KH	15 " x 5 "	4646 - 400	R700400	R40H595	R40H9220	R40H3538	R40H3539
	Ra	WG	15 " x 5 "	1252 - 346	R700346	R40H597	R40H9200	R40H3540	R40H3541
R185	Ra	WG	15 " x 6 "	4596 - 381	R700381	R40H597	R40H9200	R40H3540	R40H3541
	Ra	WG	15 " x 7 "	4597 - 383	R700383	R40H597	R40H9200	R40H3540	R40H3541
1978									
	Fa				R700321	R40H521	R40H9237	R40H3502	R40H3503
	Fa				R700321	R40H521	R40H9237	R40H3502	R40H3503
	Fa				R700321	R40H521	R40H9237	R40H3502	R40H3503
	Fa				R700321	R40H521	R40H9237	R40H3502	R40H3503
F050, F055, F060	Fa	KH	14 " x 2-1/2 "	2060 - 361	Discontinued	R40H596	R40H9219	R40H3536	R40H3537
F070	Fa	WG	15 " x 3 "	1245C - 321	R700321	R40H521	R40H9237	R40H3502	R40H3503
	Fa	WG	15 " x 3 "	1245C - 321	R700321	R40H521	R40H9237	R40H3502	R40H3503
	Fd	DN		7141 - D224	MD224[340]	69310693	60050153	NR	NR
F080, F090	Fd	DN		7149 - D236	MD236[341]	69310693	R40H5523	NR	NR
	Fd	DN		7149 - D236	MD236[341]	69310693	R40H5523	NR	NR
R170, R175	Ra	KH	15 " x 5 "	4646 - 400	R700400	R40H595	R40H9220	R40H3538	R40H3539
	Ra	WG	15 " x 5 "	1252 - 346	R700346	R40H597	R40H9200	R40H3540	R40H3541
R185	Ra	WG	15 " x 6 "	4596 - 381	R700381	R40H597	R40H9200	R40H3540	R40H3541

9 - 6 Stud, Dayton Rotor, Hat Style

37 - Also available as a New unit

41 - Aluminum piston

53 - Power Brakes

186 - 10 Stud

188 - 6 Stud, 9.251" Hub

214 - Power Brakes, Split System

219 - Power Brakes, Gasoline Engine with Vacuum Booster

329 - Forward

MERITOR DRUM OR ROTOR NO.	CALIPER OR CYLINDER BORE SIZE	MERITOR CALIPER OR WHEEL CYLINDER (LEFT)	MERITOR CALIPER OR WHEEL CYLINDER (RIGHT)	MERITOR CALIPER OR WHEEL CYLINDER REPAIR KIT	MERITOR CALIPER PISTON	MERITOR MASTER CYLINDER	MERITOR MASTER CYLINDER KIT	MERITOR BRAKE HOSE (LEFT)	MERITOR BRAKE HOSE (RIGHT)
									FORD(Cont.)
									F600 SERIES: CONVENTIONAL(Cont.)
N/A	1-5/8 "	201181	201182	SP7895S	NR	-	-	R4577147	R4577147
N/A	1.09375	R4133484	R4133485	R4166819	NR	R4111629[53]	R4122484	R4577460	R4577460
N/A	1-1/8 "	R4133714	R4133715	R4166926	NR	R4111992[214]	R4122386	R4577452	R4577453
N/A	1-1/8 "	R4133719	R4133718	R4166926	NR	R4111992[214]	R4122386	R4577452	R4577453
23-122700-002[9]	2-1/2 "	R424244X	R424244X[37]	60050266	69270757[41]	R4111992[214]	R4122386	R4577452	R4577453
N/A	1-1/8 "	R4133714	R4133715	R4166926	NR	R4111911[219]	R4122387	R4577454	R4577455
N/A	1-1/8 "	R4133716	R4133717	R4166926	NR	R4111911[219]	R4122387	R4577454	R4577455
23-122691-002[188]	2-7/8 "	60050145X	60050145X[37]	60050146	69270702[41]	R4111992[214]	R4122386	R4577452	R4577453
23-122703-002[186]	2-7/8 "	60050145X	60050145X[37]	60050146	69270702[41]	R4111992[214]	R4122386	R4577452	R4577453
N/A	1-1/4 "	R4133581	R4133581	R4166923	NR	R4111999[214]	R4122386	R4577452	R4577453
N/A	1-1/4 "	R4133720	R4133721	R4166923	NR	R4111999[214]	R4122386	R4577452	R4577453
N/A	1-1/2 "	R4033607	R4033607	R4166818	NR	-	-	R4577147	R4577147
N/A	1-5/8 "	R4133338	R4133338	R4166689	NR	-	-	R4577147	R4577147
N/A	1-5/8 "	R4133338	R4133338	R4166689	NR	-	-	R4577147	R4577147
N/A	1-3/4 "	R4133400	R4133400	R4166917	NR	-	-	R4577147	R4577147
N/A	1-5/8 "	201181	201182	SP7895S	NR	-	-	R4577147	R4577147
N/A	1-5/8 "	201185	201186[329]	SP7895S	NR	-	-	R4577147	R4577147
N/A	1-5/8 "	201185	201186[329]	SP7895S	NR	-	-	R4577147	R4577147
N/A	1-5/8 "	201181	201182	SP7895S	NR	-	-	R4577147	R4577147
N/A	1.09375	R4133484	R4133485	R4166819	NR	R4111629[53]	R4122484	R4577460	R4577460
N/A	1-1/8 "	R4133714	R4133715	R4166926	NR	R4111992[214]	R4122386	R4577452	R4577453
N/A	1-1/8 "	R4133719	R4133718	R4166926	NR	R4111992[214]	R4122386	R4577452	R4577453
23-122700-002[9]	2-1/2 "	R424244X	R424244X[37]	60050266	69270757[41]	R4111992[214]	R4122386	R4577452	R4577453
N/A	1-1/8 "	R4133714	R4133715	R4166926	NR	R4111911[219]	R4122387	R4577454	R4577455
N/A	1-1/8 "	R4133716	R4133717	R4166926	NR	R4111911[219]	R4122387	R4577454	R4577455
23-122691-002[188]	2-7/8 "	60050145X	60050145X[37]	60050146	69270702[41]	R4111992[214]	R4122386	R4577452	R4577453
23-122703-002[186]	2-7/8 "	60050145X	60050145X[37]	60050146	69270702[41]	R4111992[214]	R4122386	R4577452	R4577453
N/A	1-1/4 "	R4133720	R4133721	R4166923	NR	R4111999[214]	R4122386	R4577452	R4577453
N/A	1-1/4 "	R4133581	R4133581	R4166923	NR	R4111999[214]	R4122386	R4577452	R4577453
N/A	1-1/2 "	R4033607	R4033607	R4166818	NR	-	-	R4577147	R4577147
N/A	1-5/8 "	R4133338	R4133338	R4166689	NR	-	-	R4577147	R4577147
N/A	1-5/8 "	R4133338	R4133338	R4166689	NR	-	-	R4577147	R4577147
N/A	1-3/4 "	R4133400	R4133400	R4166917	NR	-	-	R4577147	R4577147
N/A		R4133720	R4133721	R4166923	NR	N/A[358]	R4122688	-	-
N/A		R4133714	R4133715	R4166926	NR	N/A[358]	R4122688	-	-
N/A		R4133719	R4133718	R4166926	NR	N/A[358]	R4122688	-	-
N/A		R4133581	R4133581	R4166923	NR	N/A[358]	R4122688	-	-
N/A	1.09375	R4133484	R4133485	R4166819	NR	R4110435[358]	N/A	-	-
N/A	1-1/8 "	R4133714	R4133715	R4166926	NR	R4111632[357]	R4122343	-	-
N/A	1-1/8 "	R4133716	R4133717	R4166926	NR	R4111632[357]	R4122343	-	-
23-122700-002[9]	2-1/2 "	R424244X	R424244X[37]	60050266	69270757[41]	-	-	-	-
23-122691-002[188]	2-7/8 "	60050145X	60050145X[37]	60050146	69270702[41]	-	-	-	-
23-122703-002[186]	2-7/8 "	60050145X	60050145X[37]	60050146	69270702[41]	-	-	-	-
N/A	1-1/2 "	R4033607	R4033607	R4166818	NR	-	-	-	-
N/A	1-5/8 "	R4133338	R4133338	R4166689	NR	-	-	-	-
N/A	1-5/8 "	R4133338	R4133338	R4166689	NR	-	-	-	-
N/A	1-3/4 "	R4133400	R4133400	R4166917	NR	-	-	-	-
N/A		R4133714	R4133715	R4166926	NR	N/A[358]	R4122688	-	-
N/A		R4133719	R4133718	R4166926	NR	N/A[358]	R4122688	-	-
N/A		R4133581	R4133581	R4166923	NR	N/A[358]	R4122688	-	-
N/A		R4133720	R4133721	R4166923	NR	N/A[358]	R4122688	-	-
N/A	1.09375	R4133484	R4133485	R4166819	NR	R4110435[358]	N/A	-	-
N/A	1-1/8 "	R4133716	R4133717	R4166926	NR	R4111632[357]	R4122343	-	-
N/A	1-1/8 "	R4133714	R4133715	R4166926	NR	R4111632[357]	R4122343	-	-
23-122700-002[9]	2-1/2 "	R424244X	R424244X[37]	60050266	69270757[41]	-	-	-	-
23-122691-002[188]	2-7/8 "	60050145X	60050145X[37]	60050146	69270702[41]	-	-	-	-
23-122703-002[186]	2-7/8 "	60050145X	60050145X[37]	60050146	69270702[41]	-	-	-	-
N/A	1-1/2 "	R4033607	R4033607	R4166818	NR	-	-	-	-
N/A	1-5/8 "	R4133338	R4133338	R4166689	NR	-	-	-	-
N/A	1-5/8 "	R4133338	R4133338	R4166689	NR	-	-	-	-

340 - Use 69160457 for Disc Pad Retainer Clip

341 - Use 69160445 for Disc Pad Retainer Clip

357 - Single Hydraulic System, Bosch Cylinder, after Serial No. Q20001, 18,500lb. Rear Axle

358 - Split System

MAKE MODEL YEAR AXLE CODE AXLE WEIGHT	AXLE & BRK. TYPE	BRK. MFG.	BRAKE SIZE	FMSI	MERITOR DISC PAD OR BRAKE SHOE	MERITOR GUIDE PIN OR RETURN SPRING KIT	MERITOR CALIPER HWD. KIT OR RETURN SPRING KIT	MERITOR ADJUSTER KIT (LEFT WHEEL)	MERITOR ADJUSTER KIT (RIGHT WHEEL)
FORD(Cont.)									
F600 SERIES: CONVENTIONAL(Cont.)									
1978									
	Ra	WG	15 " x 7 "	4597 - 383	R700383	R40H597	R40H9200	R40H3540	R40H3541
1977									
F050, F055, F060	Fa	KH	14 " x 2-1/2 "	2060 - 361	Discontinued	R40H596	R40H9219	R40H3536	R40H3537
	Fa	KH	14 " x 2-1/2 "	2060 - 361	Discontinued	R40H596	R40H9219	R40H3536	R40H3537
F070	Fa	WG	15 " x 3 "	1245C - 321	R700321	R40H521	R40H9237	R40H3502	R40H3503
	Fa	WG	15 " x 3 "	1245C - 321	R700321	R40H521	R40H9237	R40H3502	R40H3503
	Fd	DN		7141 - D224	MD224[340]	69310693	60050153	NR	NR
F080, F090	Fd	DN		7149 - D236	MD236[341]	69310693	R40H5523	NR	NR
	Fd	DN		7149 - D236	MD236[341]	69310693	R40H5523	NR	NR
F090, F120	Fa	WG	15 " x 3 "	1245C - 321	R700321	R40H521	R40H9237	R40H3502	R40H3503
	Fa	WG	15 " x 3 "	1245C - 321	R700321	R40H521	R40H9237	R40H3502	R40H3503
R170, R175	Ra	KH	15 " x 5 "	4646 - 400	R700400	R40H595	R40H9220	R40H3538	R40H3539
	Ra	KH	15 " x 5 "	4646 - 400	R700400	R40H595	R40H9220	R40H3538	R40H3539
	Ra	KH	15 " x 5 "	4646 - 400	R700400	R40H595	R40H9220	R40H3538	R40H3539
	Ra	WG	15 " x 5 "	1252 - 346	R700346	R40H597	R40H9200	R40H3540	R40H3541
	Ra	WG	15 " x 5 "	1252 - 346	R700346	R40H597	R40H9200	R40H3540	R40H3541
R185	Ra	WG	15 " x 6 "	4596 - 381	R700381	R40H597	R40H9200	R40H3540	R40H3541
	Ra	WG	15 " x 6 "	4596 - 381	R700381	R40H597	R40H9200	R40H3540	R40H3541
	Ra	WG	15 " x 7 "	4597 - 383	R700383	R40H597	R40H9200	R40H3540	R40H3541
	Ra	WG	15 " x 7 "	4597 - 383	R700383	R40H597	R40H9200	R40H3540	R40H3541
1976									
F050, F055, F060	Fa	KH	14 " x 2-1/2 "	2060 - 361	Discontinued	R40H596	R40H9219	R40H3536	R40H3537
	Fa	KH	14 " x 2-1/2 "	2060 - 361	Discontinued	R40H596	R40H9219	R40H3536	R40H3537
F070	Fa	WG	15 " x 3 "	1245C - 321	R700321	R40H521	R40H9237	R40H3502	R40H3503
	Fa	WG	15 " x 3 "	1245C - 321	R700321	R40H521	R40H9237	R40H3502	R40H3503
	Fa	WG	15 " x 3 "	1245C - 321	R700321	R40H521	R40H9237	R40H3502	R40H3503
	Fa	WG	15 " x 3 "	1245C - 321	R700321	R40H521	R40H9237	R40H3502	R40H3503
	Fa	WG	15 " x 3 "	1245C - 321	R700321	R40H521	R40H9237	R40H3502	R40H3503
	Fa	WG	15 " x 3 "	1245C - 321	R700321	R40H521	R40H9237	R40H3502	R40H3503
	Fd	DN		7141 - D224	MD224[340]	69310693	60050153	NR	NR
F080, F090	Fd	DN		7149 - D236	MD236[341]	69310693	R40H5523	NR	NR
	Fd	DN		7149 - D236	MD236[341]	69310693	R40H5523	NR	NR
F090, F120	Fa	WG	15 " x 3 "	1245C - 321	R700321	R40H521	R40H9237	R40H3502	R40H3503
	Fa	WG	15 " x 3 "	1245C - 321	R700321	R40H521	R40H9237	R40H3502	R40H3503
R170, R175	Ra	KH	15 " x 5 "	4646 - 400	R700400	R40H595	R40H9220	R40H3538	R40H3539
	Ra	KH	15 " x 5 "	4646 - 400	R700400	R40H595	R40H9220	R40H3538	R40H3539
	Ra	KH	15 " x 5 "	4646 - 400	R700400	R40H595	R40H9220	R40H3538	R40H3539
	Ra	KH	15 " x 5 "	4646 - 400	R700400	R40H595	R40H9220	R40H3538	R40H3539
	Ra	WG	15 " x 5 "	1252 - 346	R700346	R40H597	R40H9200	R40H3540	R40H3541
	Ra	WG	15 " x 5 "	1252 - 346	R700346	R40H597	R40H9200	R40H3540	R40H3541
R185	Ra	WG	15 " x 6 "	4596 - 381	R700381	R40H597	R40H9200	R40H3540	R40H3541
	Ra	WG	15 " x 6 "	4596 - 381	R700381	R40H597	R40H9200	R40H3540	R40H3541
	Ra	WG	15 " x 7 "	4597 - 383	R700383	R40H597	R40H9200	R40H3540	R40H3541
	Ra	WG	15 " x 7 "	4597 - 383	R700383	R40H597	R40H9200	R40H3540	R40H3541
1975									
F050, F055, F060	Fa	KH	14 " x 2-1/2 "	2060 - 361	Discontinued	R40H596	R40H9219	R40H3536	R40H3537
	Fa	KH	14 " x 2-1/2 "	2060 - 361	Discontinued	R40H596	R40H9219	R40H3536	R40H3537
F070	Fa	WG	15 " x 3 "	1245C - 321	R700321	R40H521	R40H9237	R40H3502	R40H3503
	Fa	WG	15 " x 3 "	1245C - 321	R700321	R40H521	R40H9237	R40H3502	R40H3503
	Fa	WG	15 " x 3 "	1245C - 321	R700321	R40H521	R40H9237	R40H3502	R40H3503
	Fa	WG	15 " x 3 "	1245C - 321	R700321	R40H521	R40H9237	R40H3502	R40H3503
	Fa	WG	15 " x 3 "	1245C - 321	R700321	R40H521	R40H9237	R40H3502	R40H3503
	Fa	WG	15 " x 3 "	1245C - 321	R700321	R40H521	R40H9237	R40H3502	R40H3503
	Fd	DN		7141 - D224	MD224[340]	69310693	60050153	NR	NR
F080, F090	Fd	DN		7149 - D236	MD236[341]	69310693	R40H5523	NR	NR
	Fd	DN		7149 - D236	MD236[341]	69310693	R40H5523	NR	NR
F090, F120	Fa	WG	15 " x 3 "	1245C - 321	R700321	R40H521	R40H9237	R40H3502	R40H3503
	Fa	WG	15 " x 3 "	1245C - 321	R700321	R40H521	R40H9237	R40H3502	R40H3503
R170, R175	Ra	KH	15 " x 5 "	4646 - 400	R700400	R40H595	R40H9220	R40H3538	R40H3539
	Ra	KH	15 " x 5 "	4646 - 400	R700400	R40H595	R40H9220	R40H3538	R40H3539
	Ra	KH	15 " x 5 "	4646 - 400	R700400	R40H595	R40H9220	R40H3538	R40H3539
	Ra	WG	15 " x 5 "	1252 - 346	R700346	R40H597	R40H9200	R40H3540	R40H3541
	Ra	WG	15 " x 5 "	1252 - 346	R700346	R40H597	R40H9200	R40H3540	R40H3541
R185	Ra	WG	15 " x 6 "	4596 - 381	R700381	R40H597	R40H9200	R40H3540	R40H3541

9 - 6 Stud, Dayton Rotor, Hat Style
42 - 6 Stud, Dayton Rotor, "U" Style
341 - Use 69160445 for Disc Pad Retainer Clip
37 - Also available as a New unit
186 - 10 Stud
356 - Single Hydraulic System, Bosch Cylinder, after Serial No. Q20000, 18,500lb. Rear Axle
41 - Aluminum piston
340 - Use 69160457 for Disc Pad Retainer Clip
357 - Single Hydraulic System, Bosch Cylinder, after Serial No. Q20001, 18,500lb. Rear Axle

MERITOR DRUM OR ROTOR NO.	CALIPER OR CYLINDER BORE SIZE	MERITOR CALIPER OR WHEEL CYLINDER (LEFT)	MERITOR CALIPER OR WHEEL CYLINDER (RIGHT)	MERITOR CALIPER OR WHEEL CYLINDER REPAIR KIT	MERITOR CALIPER PISTON	MERITOR MASTER CYLINDER	MERITOR MASTER CYLINDER KIT	MERITOR BRAKE HOSE (LEFT)	MERITOR BRAKE HOSE (RIGHT)
									FORD(Cont.)
									F600 SERIES: CONVENTIONAL(Cont.)
N/A	1-3/4 "	R4133400	R4133400	R4166917	NR	-	-	-	-
-	1.09375	R4133484	R4133485	R4166819	NR	R4110435[358]	N/A	-	-
-	1.09375	R4133484	R4133485	R4166819	NR	R4110435[358]	N/A	-	-
-	1-1/8 "	R4133714	R4133715	R4166926	NR	N/A[358]	R4122688	-	-
-	1-1/8 "	R4133719	R4133718	R4166926	NR	N/A[358]	R4122688	-	-
23-122700-002[9]	2-1/2 "	R424244X	R424244X[37]	60050266	69270757[41]	-	-	-	-
23-122703-002[186]	2-7/8 "	60050145X	60050145X[37]	60050146	69270702[41]	-	-	-	-
23-122691-002[42]	2-7/8 "	60050145X	60050145X[37]	60050146	69270702[41]	-	-	-	-
-	1-1/4 "	R4133720	R4133721	R4166923	NR	N/A[358]	R4122688	-	-
-	1-1/4 "	R4133581	R4133581	R4166923	NR	N/A[358]	R4122688	-	-
-	1-1/2 "	R4033607	R4033607	R4166818	NR	-	-	-	-
-	1-5/8 "	R4133606	R4133606	R415193	NR	-	-	-	-
-	1-1/2 "	R4033607	R4033607	R4166818	NR	-	-	-	-
-	1-5/8 "	R4133338	R4133338	R4166689	NR	-	-	-	-
-	1-5/8 "	R4133338	R4133338	R4166689	NR	-	-	-	-
-	1-5/8 "	R4133338	R4133338	R4166689	NR	-	-	-	-
-	1-5/8 "	R4133338	R4133338	R4166689	NR	-	-	-	-
-	1-3/4 "	R4133400	R4133400	R4166917	NR	-	-	-	-
-	1-3/4 "	R4133400	R4133400	R4166917	NR	-	-	-	-
-	1.09375	R4133484	R4133485	R4166819	NR	R4110435[358]	N/A	-	-
-	1.09375	R4133484	R4133485	R4166819	NR	R4110435[358]	N/A	-	-
-	1-1/8 "	R4133714	R4133715	R4166926	NR	R4111632[357]	R4122343	-	-
-	1-1/8 "	R4133714	R4133715	R4166926	NR	N/A[358]	R4122688	-	-
-	1-1/8 "	R4133719	R4133718	R4166926	NR	N/A[358]	R4122688	-	-
-	1-1/8 "	R4133716	R4133717	R4166926	NR	R4111632[357]	R4122343	-	-
-	1-1/8 "	R4133716	R4133717	R4166926	NR	R4111622[356]	N/A	-	-
-	1-1/8 "	R4133714	R4133715	R4166926	NR	R4111622[356]	N/A	-	-
23-122700-002[9]	2-1/2 "	R424244X	R424244X[37]	60050266	69270757[41]	-	-	-	-
23-122703-002[186]	2-7/8 "	60050145X	60050145X[37]	60050146	69270702[41]	-	-	-	-
23-122691-002[42]	2-7/8 "	60050145X	60050145X[37]	60050146	69270702[41]	-	-	-	-
-	1-1/4 "	R4133720	R4133721	R4166923	NR	N/A[358]	R4122688	-	-
-	1-1/4 "	R4133581	R4133581	R4166923	NR	N/A[358]	R4122688	-	-
-	1-5/8 "	R4133606	R4133606	R415193	NR	-	-	-	-
-	1-1/2 "	R4033607	R4033607	R4166818	NR	-	-	-	-
-	1-1/2 "	R4033607	R4033607	R4166818	NR	-	-	-	-
-	1-5/8 "	R4133338	R4133338	R4166689	NR	-	-	-	-
-	1-5/8 "	R4133338	R4133338	R4166689	NR	-	-	-	-
-	1-5/8 "	R4133338	R4133338	R4166689	NR	-	-	-	-
-	1-5/8 "	R4133338	R4133338	R4166689	NR	-	-	-	-
-	1-3/4 "	R4133400	R4133400	R4166917	NR	-	-	-	-
-	1-3/4 "	R4133400	R4133400	R4166917	NR	-	-	-	-
-	1.09375	R4133484	R4133485	R4166819	NR	R4110435[358]	N/A	-	-
-	1.09375	R4133484	R4133485	R4166819	NR	R4110435[358]	N/A	-	-
-	1-1/8 "	R4133714	R4133715	R4166926	NR	R4111622[356]	N/A	-	-
-	1-1/8 "	R4133716	R4133717	R4166926	NR	R4111622[356]	N/A	-	-
-	1-1/8 "	R4133719	R4133718	R4166926	NR	N/A[358]	R4122688	-	-
-	1-1/8 "	R4133714	R4133715	R4166926	NR	N/A[358]	R4122688	-	-
-	1-1/8 "	R4133714	R4133715	R4166926	NR	R4111632[357]	R4122343	-	-
-	1-1/8 "	R4133716	R4133717	R4166926	NR	R4111632[357]	R4122343	-	-
23-122700-002[9]	2-1/2 "	R424244X	R424244X[37]	60050266	69270757[41]	-	-	-	-
23-122703-002[186]	2-7/8 "	60050145X	60050145X[37]	60050146	69270702[41]	-	-	-	-
23-122691-002[42]	2-7/8 "	60050145X	60050145X[37]	60050146	69270702[41]	-	-	-	-
-	1-1/4 "	R4133581	R4133581	R4166923	NR	N/A[358]	R4122688	-	-
-	1-1/4 "	R4133720	R4133721	R4166923	NR	N/A[358]	R4122688	-	-
-	1-1/2 "	R4033607	R4033607	R4166818	NR	-	-	-	-
-	1-1/2 "	R4033607	R4033607	R4166818	NR	-	-	-	-
-	1-5/8 "	R4133606	R4133606	R415193	NR	-	-	-	-
-	1-5/8 "	R4133338	R4133338	R4166689	NR	-	-	-	-
-	1-5/8 "	R4133338	R4133338	R4166689	NR	-	-	-	-
-	1-5/8 "	R4133338	R4133338	R4166689	NR	-	-	-	-

358 - Split System

MAKE MODEL YEAR AXLE CODE AXLE WEIGHT	AXLE & BRK. TYPE	BRK. MFG.	BRAKE SIZE	FMSI	MERITOR DISC PAD OR BRAKE SHOE	MERITOR GUIDE PIN OR RETURN SPRING KIT	MERITOR CALIPER HWD. KIT OR RETURN SPRING KIT	MERITOR ADJUSTER KIT (LEFT WHEEL)	MERITOR ADJUSTER KIT (RIGHT WHEEL)
FORD(Cont.)									
F600 SERIES: CONVENTIONAL(Cont.)									
1975									
	Ra	WG	15 " x 6 "	4596 - 381	R700381	R40H597	R40H9200	R40H3540	R40H3541
	Ra	WG	15 " x 7 "	4597 - 383	R700383	R40H597	R40H9200	R40H3540	R40H3541
	Ra	WG	15 " x 7 "	4597 - 383	R700383	R40H597	R40H9200	R40H3540	R40H3541
1974									
F050, F055, F060	Fa	KH	14 " x 2-1/2 "	2060 - 361	Discontinued	R40H596	R40H9219	R40H3536	R40H3537
	Fa	KH	14 " x 2-1/2 "	2060 - 361	Discontinued	R40H596	R40H9219	R40H3536	R40H3537
F070	Fa	WG	15 " x 3 "	1245C - 321	R700321	R40H521	R40H9237	R40H3502	R40H3503
	Fa	WG	15 " x 3 "	1245C - 321	R700321	R40H521	R40H9237	R40H3502	R40H3503
	Fa	WG	15 " x 3 "	1245C - 321	R700321	R40H521	R40H9237	R40H3502	R40H3503
	Fa	WG	15 " x 3 "	1245C - 321	R700321	R40H521	R40H9237	R40H3502	R40H3503
	Fa	WG	15 " x 3 "	1245C - 321	R700321	R40H521	R40H9237	R40H3502	R40H3503
	Fa	WG	15 " x 3 "	1245C - 321	R700321	R40H521	R40H9237	R40H3502	R40H3503
	Fd	DN		7141 - D224	MD224[340]	69310693	60050153	NR	NR
F080, F090	Fd	DN		7149 - D236	MD236[341]	69310693	R40H5523	NR	NR
	Fd	DN		7149 - D236	MD236[341]	69310693	R40H5523	NR	NR
F090, F120	Fa	WG	15 " x 3 "	1245C - 321	R700321	R40H521	R40H9237	R40H3502	R40H3503
	Fa	WG	15 " x 3 "	1245C - 321	R700321	R40H521	R40H9237	R40H3502	R40H3503
R170, R175	Ra	KH	15 " x 5 "	4646 - 400	R700400	R40H595	R40H9220	R40H3538	R40H3539
	Ra	KH	15 " x 5 "	4646 - 400	R700400	R40H595	R40H9220	R40H3538	R40H3539
	Ra	KH	15 " x 5 "	4646 - 400	R700400	R40H595	R40H9220	R40H3538	R40H3539
	Ra	WG	15 " x 5 "	1252 - 346	R700346	R40H597	R40H9200	R40H3540	R40H3541
	Ra	WG	15 " x 5 "	1252 - 346	R700346	R40H597	R40H9200	R40H3540	R40H3541
R185	Ra	WG	15 " x 6 "	4596 - 381	R700381	R40H597	R40H9200	R40H3540	R40H3541
	Ra	WG	15 " x 6 "	4596 - 381	R700381	R40H597	R40H9200	R40H3540	R40H3541
	Ra	WG	15 " x 7 "	4597 - 383	R700383	R40H597	R40H9200	R40H3540	R40H3541
	Ra	WG	15 " x 7 "	4597 - 383	R700383	R40H597	R40H9200	R40H3540	R40H3541
1973									
F050, F055, F060	Fa	KH	14 " x 2-1/2 "	2060T - 361	N/A	R40H596	R40H9219	R40H3536	R40H3537
	Fa	KH	14 " x 2-1/2 "	2060T - 361	N/A	R40H596	R40H9219	R40H3536	R40H3537
	Fa	KH	14 " x 2-1/2 "	2060 - 361	Discontinued	R40H596	R40H9219	R40H3536	R40H3537
	Fa	KH	14 " x 2-1/2 "	2060 - 361	Discontinued	R40H596	R40H9219	R40H3536	R40H3537
F070	Fa	WG	15 " x 3 "	1245C - 321	R700321	R40H521	R40H9237	R40H3502	R40H3503
	Fa	WG	15 " x 3 "	1245C - 321	R700321	R40H521	R40H9237	R40H3502	R40H3503
	Fa	WG	15 " x 3 "	1245C - 321	R700321	R40H521	R40H9237	R40H3502	R40H3503
	Fa	WG	15 " x 3 "	1245C - 321	R700321	R40H521	R40H9237	R40H3502	R40H3503
	Fa	WG	15 " x 3 "	1245C - 321	R700321	R40H521	R40H9237	R40H3502	R40H3503
	Fa	WG	15 " x 3 "	1245C - 321	R700321	R40H521	R40H9237	R40H3502	R40H3503
	Fd	DN		7141 - D224	MD224[340]	69310693	60050153	NR	NR
F080, F090	Fd	DN		7149 - D236	MD236[341]	69310693	R40H5523	NR	NR
	Fd	DN		7149 - D236	MD236[341]	69310693	R40H5523	NR	NR
F090, F120	Fa	WG	15 " x 3 "	1245C - 321	R700321	R40H521	R40H9237	R40H3502	R40H3503
	Fa	WG	15 " x 3 "	1245C - 321	R700321	R40H521	R40H9237	R40H3502	R40H3503
R170, R175	Ra	KH	15 " x 5 "	4646 - 400	R700400	R40H595	R40H9220	R40H3538	R40H3539
	Ra	KH	15 " x 5 "	4646 - 400	R700400	R40H595	R40H9220	R40H3538	R40H3539
	Ra	KH	15 " x 5 "	4646 - 400	R700400	R40H595	R40H9220	R40H3538	R40H3539
	Ra	WG	15 " x 5 "	1252 - 346	R700346	R40H597	R40H9200	R40H3540	R40H3541
	Ra	WG	15 " x 5 "	1252 - 346	R700346	R40H597	R40H9200	R40H3540	R40H3541
R185	Ra	WG	15 " x 6 "	4596 - 381	R700381	R40H597	R40H9200	R40H3540	R40H3541
	Ra	WG	15 " x 6 "	4596 - 381	R700381	R40H597	R40H9200	R40H3540	R40H3541
	Ra	WG	15 " x 7 "	4597 - 383	R700383	R40H597	R40H9200	R40H3540	R40H3541
	Ra	WG	15 " x 7 "	4597 - 383	R700383	R40H597	R40H9200	R40H3540	R40H3541
1972									
F050, F055, F060	Fa	KH	14 " x 2-1/2 "	2060 - 361	Discontinued	R40H596	R40H9219	R40H3536	R40H3537
	Fa	KH	14 " x 2-1/2 "	2060 - 361	Discontinued	R40H596	R40H9219	R40H3536	R40H3537
F070	Fa	WG	15 " x 3 "	1245C - 321	R700321	R40H521	R40H9237	R40H3502	R40H3503
	Fa	WG	15 " x 3 "	1245C - 321	R700321	R40H521	R40H9237	R40H3502	R40H3503
	Fa	WG	15 " x 3 "	1245C - 321	R700321	R40H521	R40H9237	R40H3502	R40H3503
	Fa	WG	15 " x 3 "	1245C - 321	R700321	R40H521	R40H9237	R40H3502	R40H3503
	Fa	WG	15 " x 3 "	1245C - 321	R700321	R40H521	R40H9237	R40H3502	R40H3503
	Fa	WG	15 " x 3 "	1245C - 321	R700321	R40H521	R40H9237	R40H3502	R40H3503
	Fa	WG	15 " x 3 "	1245C - 321	R700321	R40H521	R40H9237	R40H3502	R40H3503
	Fa	WG	15 " x 3 "	1245C - 321	R700321	R40H521	R40H9237	R40H3502	R40H3503
	Fd	DN		7141 - D224	MD224[340]	69310693	60050153	NR	NR

9 - 6 Stud, Dayton Rotor, Hat Style
42 - 6 Stud, Dayton Rotor, "U" Style
341 - Use 69160445 for Disc Pad Retainer Clip
37 - Also available as a New unit
186 - 10 Stud
356 - Single Hydraulic System, Bosch Cylinder, after Serial No. Q20000, 18,500lb. Rear Axle
41 - Aluminum piston
340 - Use 69160457 for Disc Pad Retainer Clip
357 - Single Hydraulic System, Bosch Cylinder, after Serial No. Q20001, 18,500lb. Rear Axle

MERITOR DRUM OR ROTOR NO.	CALIPER OR CYLINDER BORE SIZE	MERITOR CALIPER OR WHEEL CYLINDER (LEFT)	MERITOR CALIPER OR WHEEL CYLINDER (RIGHT)	MERITOR CALIPER OR WHEEL CYLINDER REPAIR KIT	MERITOR CALIPER PISTON	MERITOR MASTER CYLINDER	MERITOR MASTER CYLINDER KIT	MERITOR BRAKE HOSE (LEFT)	MERITOR BRAKE HOSE (RIGHT)
									FORD(Cont.)
									F600 SERIES: CONVENTIONAL(Cont.)
-	1-5/8 "	R4133338	R4133338	R4166689	NR	-	-	-	-
-	1-3/4 "	R4133400	R4133400	R4166917	NR	-	-	-	-
-	1-3/4 "	R4133400	R4133400	R4166917	NR	-	-	-	-
-	1.09375	R4133484	R4133485	R4166819	NR	R4110435[358]	N/A	-	-
-	1.09375	R4133484	R4133485	R4166819	NR	R4110435[358]	N/A	-	-
-	1-1/8 "	R4133716	R4133717	R4166926	NR	R4111632[357]	R4122343	-	-
-	1-1/8 "	R4133719	R4133718	R4166926	NR	N/A[358]	R4122688	-	-
-	1-1/8 "	R4133714	R4133715	R4166926	NR	R4111632[357]	R4122343	-	-
-	1-1/8 "	R4133714	R4133715	R4166926	NR	R4111622[356]	N/A	-	-
-	1-1/8 "	R4133716	R4133717	R4166926	NR	R4111622[356]	N/A	-	-
-	1-1/8 "	R4133714	R4133715	R4166926	NR	N/A[358]	R4122688	-	-
23-122700-002[9]	2-1/2 "	R424244X	R424244X[37]	60050266	69270757[41]	-	-	-	-
23-122691-002[42]	2-7/8 "	60050145X	60050145X[37]	60050146	69270702[41]	-	-	-	-
23-122703-002[186]	2-7/8 "	60050145X	60050145X[37]	60050146	69270702[41]	-	-	-	-
-	1-1/4 "	R4133720	R4133721	R4166923	NR	N/A[358]	R4122688	-	-
-	1-1/4 "	R4133581	R4133581	R4166923	NR	N/A[358]	R4122688	-	-
-	1-1/2 "	R4033607	R4033607	R4166818	NR	-	-	-	-
-	1-1/2 "	R4033607	R4033607	R4166818	NR	-	-	-	-
-	1-5/8 "	R4133606	R4133606	R415193	NR	-	-	-	-
-	1-5/8 "	R4133338	R4133338	R4166689	NR	-	-	-	-
-	1-5/8 "	R4133338	R4133338	R4166689	NR	-	-	-	-
-	1-5/8 "	R4133338	R4133338	R4166689	NR	-	-	-	-
-	1-5/8 "	R4133338	R4133338	R4166689	NR	-	-	-	-
-	1-3/4 "	R4133400	R4133400	R4166917	NR	-	-	-	-
-	1-3/4 "	R4133400	R4133400	R4166917	NR	-	-	-	-
-	1.09375	R4133484	R4133485	R4166819	NR	R4110435[358]	N/A	-	-
-	1-1/8 "	R4133484	R4133485	R4166819	NR	R4110435[358]	N/A	-	-
-	1.09375	R4133484	R4133485	R4166819	NR	-	-	-	-
-	1.09375	R4133484	R4133485	R4166819	NR	-	-	-	-
-	1-1/8 "	R4133716	R4133717	R4166926	NR	R4111622[356]	N/A	-	-
-	1-1/8 "	R4133714	R4133715	R4166926	NR	N/A[358]	R4122688	-	-
-	1-1/8 "	R4133719	R4133718	R4166926	NR	N/A[358]	R4122688	-	-
-	1-1/8 "	R4133714	R4133715	R4166926	NR	R4111632[357]	R4122343	-	-
-	1-1/8 "	R4133716	R4133717	R4166926	NR	R4111632[357]	R4122343	-	-
-	1-1/8 "	R4133714	R4133715	R4166926	NR	R4111622[356]	N/A	-	-
23-122700-002[9]	2-1/2 "	R424244X	R424244X[37]	60050266	69270757[41]	-	-	-	-
23-122691-002[42]	2-7/8 "	60050145X	60050145X[37]	60050146	69270702[41]	-	-	-	-
23-122703-002[186]	2-7/8 "	60050145X	60050145X[37]	60050146	69270702[41]	-	-	-	-
-	1-1/4 "	R4133581	R4133581	R4166923	NR	N/A[358]	R4122688	-	-
-	1-1/4 "	R4133720	R4133721	R4166923	NR	N/A[358]	R4122688	-	-
-	1-1/2 "	R4033607	R4033607	R4166818	NR	-	-	-	-
-	1-5/8 "	R4133606	R4133606	R415193	NR	-	-	-	-
-	1-1/2 "	R4033607	R4033607	R4166818	NR	-	-	-	-
-	1-5/8 "	R4133338	R4133338	R4166689	NR	-	-	-	-
-	1-5/8 "	R4133338	R4133338	R4166689	NR	-	-	-	-
-	1-5/8 "	R4133338	R4133338	R4166689	NR	-	-	-	-
-	1-5/8 "	R4133338	R4133338	R4166689	NR	-	-	-	-
-	1-3/4 "	R4133400	R4133400	R4166917	NR	-	-	-	-
-	1-3/4 "	R4133400	R4133400	R4166917	NR	-	-	-	-
-	1.09375	R4133484	R4133485	R4166819	NR	-	-	-	-
-	1.09375	R4133484	R4133485	R4166819	NR	-	-	-	-
-	1-1/8 "	R4133716	R4133717	R4166926	NR	-	-	-	-
-	1-1/8 "	R4133714	R4133715	R4166926	NR	-	-	-	-
-	1-1/8 "	R4133714	R4133715	R4166926	NR	-	-	-	-
-	1-1/8 "	R4133714	R4133715	R4166926	NR	-	-	-	-
-	1-1/8 "	R4133719	R4133718	R4166926	NR	-	-	-	-
-	1-1/8 "	R4133714	R4133715	R4166926	NR	-	-	-	-
-	1-1/8 "	R4133716	R4133717	R4166926	NR	-	-	-	-
-	1-1/8 "	R4133719	R4133718	R4166926	NR	-	-	-	-
23-122700-002[9]	2-1/2 "	R424244X	R424244X[37]	60050266	69270757[41]	-	-	-	-

358 - Split System

MAKE MODEL YEAR AXLE CODE AXLE WEIGHT	AXLE & BRK. TYPE	BRK. MFG.	BRAKE SIZE	FMSI	MERITOR DISC PAD OR BRAKE SHOE	MERITOR GUIDE PIN OR RETURN SPRING KIT	MERITOR CALIPER HWD. KIT OR RETURN SPRING KIT	MERITOR ADJUSTER KIT (LEFT WHEEL)	MERITOR ADJUSTER KIT (RIGHT WHEEL)
FORD(Cont.)									
F600 SERIES: CONVENTIONAL(Cont.)									
1972									
F080, F090	Fd	DN		7149 - D236	MD236[341]	69310693	R40H5523	NR	NR
	Fd	DN		7149 - D236	MD236[341]	69310693	R40H5523	NR	NR
F090, F120	Fa	WG	15 " x 3 "	1245C - 321	R700321	R40H521	R40H9237	R40H3502	R40H3503
	Fa	WG	15 " x 3 "	1245C - 321	R700321	R40H521	R40H9237	R40H3502	R40H3503
	Fa	WG	15 " x 3 "	1245C - 321	R700321	R40H521	R40H9237	R40H3502	R40H3503
	Fa	WG	15 " x 3 "	1245C - 321	R700321	R40H521	R40H9237	R40H3502	R40H3503
R170, R175	Ra	KH	15 " x 5 "	4646 - 400	R700400	R40H595	R40H9220	R40H3538	R40H3539
	Ra	KH	15 " x 5 "	4646 - 400	R700400	R40H595	R40H9220	R40H3538	R40H3539
	Ra	KH	15 " x 5 "	4646 - 400	R700400	R40H595	R40H9220	R40H3538	R40H3539
	Ra	WG	15 " x 5 "	1252 - 346	R700346	R40H597	R40H9200	R40H3540	R40H3541
	Ra	WG	15 " x 5 "	1252 - 346	R700346	R40H597	R40H9200	R40H3540	R40H3541
R185	Ra	WG	15 " x 6 "	4596 - 381	R700381	R40H597	R40H9200	R40H3540	R40H3541
	Ra	WG	15 " x 6 "	4596 - 381	R700381	R40H597	R40H9200	R40H3540	R40H3541
	Ra	WG	15 " x 7 "	4597 - 383	R700383	R40H597	R40H9200	R40H3540	R40H3541
	Ra	WG	15 " x 7 "	4597 - 383	R700383	R40H597	R40H9200	R40H3540	R40H3541
1971									
F050, F055, F060	Fa	KH	14 " x 2-1/2 "	2060 - 361	Discontinued	R40H596	R40H9219	R40H3536	R40H3537
	Fa	KH	14 " x 2-1/2 "	2060 - 361	Discontinued	R40H596	R40H9219	R40H3536	R40H3537
F070	Fa	WG	15 " x 3 "	1245C - 321	R700321	R40H521	R40H9237	R40H3502	R40H3503
	Fa	WG	15 " x 3 "	1245C - 321	R700321	R40H521	R40H9237	R40H3502	R40H3503
	Fa	WG	15 " x 3 "	1245C - 321	R700321	R40H521	R40H9237	R40H3502	R40H3503
	Fa	WG	15 " x 3 "	1245C - 321	R700321	R40H521	R40H9237	R40H3502	R40H3503
	Fa	WG	15 " x 3 "	1245C - 321	R700321	R40H521	R40H9237	R40H3502	R40H3503
	Fa	WG	15 " x 3 "	1245C - 321	R700321	R40H521	R40H9237	R40H3502	R40H3503
	Fa	WG	15 " x 3 "	1245C - 321	R700321	R40H521	R40H9237	R40H3502	R40H3503
	Fa	WG	15 " x 3 "	1245C - 321	R700321	R40H521	R40H9237	R40H3502	R40H3503
	Fd	DN		7141 - D224	MD224[340]	69310693	60050153	NR	NR
F080, F090	Fd	DN		7149 - D236	MD236[341]	69310693	R40H5523	NR	NR
	Fd	DN		7149 - D236	MD236[341]	69310693	R40H5523	NR	NR
F090, F120	Fa	WG	15 " x 3 "	1245C - 321	R700321	R40H521	R40H9237	R40H3502	R40H3503
	Fa	WG	15 " x 3 "	1245C - 321	R700321	R40H521	R40H9237	R40H3502	R40H3503
	Fa	WG	15 " x 3 "	1245C - 321	R700321	R40H521	R40H9237	R40H3502	R40H3503
	Fa	WG	15 " x 3 "	1245C - 321	R700321	R40H521	R40H9237	R40H3502	R40H3503
R170, R175	Ra	KH	15 " x 5 "	4646 - 400	R700400	R40H595	R40H9220	R40H3538	R40H3539
	Ra	KH	15 " x 5 "	4646 - 400	R700400	R40H595	R40H9220	R40H3538	R40H3539
	Ra	KH	15 " x 5 "	4646 - 400	R700400	R40H595	R40H9220	R40H3538	R40H3539
	Ra	WG	15 " x 5 "	1252 - 346	R700346	R40H597	R40H9200	R40H3540	R40H3541
	Ra	WG	15 " x 5 "	1252 - 346	R700346	R40H597	R40H9200	R40H3540	R40H3541
R185	Ra	WG	15 " x 6 "	4596 - 381	R700381	R40H597	R40H9200	R40H3540	R40H3541
	Ra	WG	15 " x 6 "	4596 - 381	R700381	R40H597	R40H9200	R40H3540	R40H3541
	Ra	WG	15 " x 7 "	4597 - 383	R700383	R40H597	R40H9200	R40H3540	R40H3541
	Ra	WG	15 " x 7 "	4597 - 383	R700383	R40H597	R40H9200	R40H3540	R40H3541
1970									
F050, F055, F060	Fa	KH	14 " x 2-1/2 "	2060 - 361	Discontinued	R40H596	R40H9219	R40H3536	R40H3537
	Fa	KH	14 " x 2-1/2 "	2060 - 361	Discontinued	R40H596	R40H9219	R40H3536	R40H3537
F070	Fa	WG	15 " x 3 "	1245C - 321	R700321	R40H521	R40H9237	R40H3502	R40H3503
	Fa	WG	15 " x 3 "	1245C - 321	R700321	R40H521	R40H9237	R40H3502	R40H3503
	Fa	WG	15 " x 3 "	1245C - 321	R700321	R40H521	R40H9237	R40H3502	R40H3503
	Fa	WG	15 " x 3 "	1245C - 321	R700321	R40H521	R40H9237	R40H3502	R40H3503
	Fa	WG	15 " x 3 "	1245C - 321	R700321	R40H521	R40H9237	R40H3502	R40H3503
	Fa	WG	15 " x 3 "	1245C - 321	R700321	R40H521	R40H9237	R40H3502	R40H3503
	Fa	WG	15 " x 3 "	1245C - 321	R700321	R40H521	R40H9237	R40H3502	R40H3503
	Fa	WG	15 " x 3 "	1245C - 321	R700321	R40H521	R40H9237	R40H3502	R40H3503
	Fd	DN		7141 - D224	MD224[340]	69310693	60050153	NR	NR
F080, F090	Fd	DN		7149 - D236	MD236[341]	69310693	R40H5523	NR	NR
	Fd	DN		7149 - D236	MD236[341]	69310693	R40H5523	NR	NR
F090, F120	Fa	WG	15 " x 3 "	1245C - 321	R700321	R40H521	R40H9237	R40H3502	R40H3503
	Fa	WG	15 " x 3 "	1245C - 321	R700321	R40H521	R40H9237	R40H3502	R40H3503
	Fa	WG	15 " x 3 "	1245C - 321	R700321	R40H521	R40H9237	R40H3502	R40H3503
	Fa	WG	15 " x 3 "	1245C - 321	R700321	R40H521	R40H9237	R40H3502	R40H3503
R170, R175	Ra	KH	15 " x 5 "	4646 - 400	R700400	R40H595	R40H9220	R40H3538	R40H3539
	Ra	KH	15 " x 5 "	4646 - 400	R700400	R40H595	R40H9220	R40H3538	R40H3539
	Ra	KH	15 " x 5 "	4646 - 400	R700400	R40H595	R40H9220	R40H3538	R40H3539
	Ra	WG	15 " x 5 "	1252 - 346	R700346	R40H597	R40H9200	R40H3540	R40H3541

9 - 6 Stud, Dayton Rotor, Hat Style
42 - 6 Stud, Dayton Rotor, "U" Style
341 - Use 69160445 for Disc Pad Retainer Clip
37 - Also available as a New unit
186 - 10 Stud
358 - Split System
41 - Aluminum piston
340 - Use 69160457 for Disc Pad Retainer Clip

MERITOR DRUM OR ROTOR NO.	CALIPER OR CYLINDER BORE SIZE	MERITOR CALIPER OR WHEEL CYLINDER (LEFT)	MERITOR CALIPER OR WHEEL CYLINDER (RIGHT)	MERITOR CALIPER OR WHEEL CYLINDER REPAIR KIT	MERITOR CALIPER PISTON	MERITOR MASTER CYLINDER	MERITOR MASTER CYLINDER KIT	MERITOR BRAKE HOSE (LEFT)	MERITOR BRAKE HOSE (RIGHT)
									FORD(Cont.)
									F600 SERIES: CONVENTIONAL(Cont.)
23-122691-002[42]	2-7/8 "	60050145X	60050145X[37]	60050146	69270702[41]	-	-	-	-
23-122703-002[186]	2-7/8 "	60050145X	60050145X[37]	60050146	69270702[41]	-	-	-	-
-	1-1/4 "	R4133720	R4133721	R4166923	NR	N/A[358]	R4122688	-	-
-	1-1/4 "	R4133581	R4133582	R4166923	NR	N/A[358]	R4122688	-	-
-	1-1/4 "	R4133581	R4133581	R4166923	NR	N/A[358]	R4122688	-	-
-	1-1/4 "	R4133720	R4133721	R4166923	NR	N/A[358]	R4122688	-	-
-	1-5/8 "	R4133606	R4133606	R415193	NR	-	-	-	-
-	1-1/2 "	R4033607	R4033607	R4166818	NR	-	-	-	-
-	1-1/2 "	R4033607	R4033607	R4166818	NR	-	-	-	-
-	1-5/8 "	R4133338	R4133338	R4166689	NR	-	-	-	-
-	1-5/8 "	R4133338	R4133338	R4166689	NR	-	-	-	-
-	1-5/8 "	R4133338	R4133338	R4166689	NR	-	-	-	-
-	1-5/8 "	R4133338	R4133338	R4166689	NR	-	-	-	-
-	1-3/4 "	R4133400	R4133400	R4166917	NR	-	-	-	-
-	1-3/4 "	R4133400	R4133400	R4166917	NR	-	-	-	-
-	1.09375	R4133484	R4133485	R4166819	NR	-	-	-	-
-	1.09375	R4133484	R4133485	R4166819	NR	-	-	-	-
-	1-1/8 "	R4133714	R4133715	R4166926	NR	-	-	-	-
-	1-1/8 "	R4133719	R4133718	R4166926	NR	-	-	-	-
-	1-1/8 "	R4133714	R4133715	R4166926	NR	-	-	-	-
-	1-1/8 "	R4133719	R4133718	R4166926	NR	-	-	-	-
-	1-1/8 "	R4133716	R4133717	R4166926	NR	-	-	-	-
-	1-1/8 "	R4133716	R4133717	R4166926	NR	-	-	-	-
-	1-1/8 "	R4133714	R4133715	R4166926	NR	-	-	-	-
-	1-1/8 "	R4133714	R4133715	R4166926	NR	-	-	-	-
23-122700-002[9]	2-1/2 "	R424244X	R424244X[37]	60050266	69270757[41]	-	-	-	-
23-122691-002[42]	2-7/8 "	60050145X	60050145X[37]	60050146	69270702[41]	-	-	-	-
23-122703-002[186]	2-7/8 "	60050145X	60050145X[37]	60050146	69270702[41]	-	-	-	-
-	1-1/4 "	R4133581	R4133581	R4166923	NR	N/A[358]	R4122688	-	-
-	1-1/4 "	R4133581	R4133582	R4166923	NR	N/A[358]	R4122688	-	-
-	1-1/4 "	R4133720	R4133721	R4166923	NR	N/A[358]	R4122688	-	-
-	1-1/4 "	R4133720	R4133721	R4166923	NR	N/A[358]	R4122688	-	-
-	1-1/2 "	R4033607	R4033607	R4166818	NR	-	-	-	-
-	1-5/8 "	R4133606	R4133606	R415193	NR	-	-	-	-
-	1-1/2 "	R4033607	R4033607	R4166818	NR	-	-	-	-
-	1-5/8 "	R4133338	R4133338	R4166689	NR	-	-	-	-
-	1-5/8 "	R4133338	R4133338	R4166689	NR	-	-	-	-
-	1-5/8 "	R4133338	R4133338	R4166689	NR	-	-	-	-
-	1-5/8 "	R4133338	R4133338	R4166689	NR	-	-	-	-
-	1-3/4 "	R4133400	R4133400	R4166917	NR	-	-	-	-
-	1-3/4 "	R4133400	R4133400	R4166917	NR	-	-	-	-
-	1.09375	R4133484	R4133485	R4166819	NR	-	-	-	-
-	1.09375	R4133484	R4133485	R4166819	NR	-	-	-	-
-	1-1/8 "	R4133719	R4133718	R4166926	NR	-	-	-	-
-	1-1/8 "	R4133716	R4133717	R4166926	NR	-	-	-	-
-	1-1/8 "	R4133714	R4133715	R4166926	NR	-	-	-	-
-	1-1/8 "	R4133716	R4133717	R4166926	NR	-	-	-	-
-	1-1/8 "	R4133714	R4133715	R4166926	NR	-	-	-	-
-	1-1/8 "	R4133714	R4133715	R4166926	NR	-	-	-	-
-	1-1/8 "	R4133719	R4133718	R4166926	NR	-	-	-	-
-	1-1/8 "	R4133714	R4133715	R4166926	NR	-	-	-	-
23-122700-002[9]	2-1/2 "	R424244X	R424244X[37]	60050266	69270757[41]	-	-	-	-
23-122703-002[186]	2-7/8 "	60050145X	60050145X[37]	60050146	69270702[41]	-	-	-	-
23-122691-002[42]	2-7/8 "	60050145X	60050145X[37]	60050146	69270702[41]	-	-	-	-
-	1-1/4 "	R4133720	R4133721	R4166923	NR	N/A[358]	R4122688	-	-
-	1-1/4 "	R4133581	R4133581	R4166923	NR	N/A[358]	R4122688	-	-
-	1-1/4 "	R4133720	R4133721	R4166923	NR	N/A[358]	R4122688	-	-
-	1-1/4 "	R4133581	R4133582	R4166923	NR	N/A[358]	R4122688	-	-
-	1-1/2 "	R4033607	R4033607	R4166818	NR	-	-	-	-
-	1-5/8 "	R4133606	R4133606	R415193	NR	-	-	-	-
-	1-1/2 "	R4033607	R4033607	R4166818	NR	-	-	-	-
-	1-5/8 "	R4133338	R4133338	R4166689	NR	-	-	-	-

MAKE MODEL YEAR AXLE CODE AXLE WEIGHT	AXLE & BRK. TYPE	BRK. MFG.	BRAKE SIZE	FMSI	MERITOR DISC PAD OR BRAKE SHOE	MERITOR GUIDE PIN OR RETURN SPRING KIT	MERITOR CALIPER HWD. KIT OR RETURN SPRING KIT	MERITOR ADJUSTER KIT (LEFT WHEEL)	MERITOR ADJUSTER KIT (RIGHT WHEEL)
FORD(Cont.)									
F600 SERIES: CONVENTIONAL(Cont.)									
1970									
R170, R175	Ra	WG	15 " x 5 "	1252 - 346	R700346	R40H597	R40H9200	R40H3540	R40H3541
R185	Ra	WG	15 " x 6 "	4596 - 381	R700381	R40H597	R40H9200	R40H3540	R40H3541
	Ra	WG	15 " x 6 "	4596 - 381	R700381	R40H597	R40H9200	R40H3540	R40H3541
	Ra	WG	15 " x 7 "	4597 - 383	R700383	R40H597	R40H9200	R40H3540	R40H3541
	Ra	WG	15 " x 7 "	4597 - 383	R700383	R40H597	R40H9200	R40H3540	R40H3541
1969									
F050, F055, F060	Fa	KH	14 " x 2-1/2 "	2060 - 361	Discontinued	R40H596	R40H9219	R40H3536	R40H3537
	Fa	KH	14 " x 2-1/2 "	2060 - 361	Discontinued	R40H596	R40H9219	R40H3536	R40H3537
F070	Fa	WG	15 " x 3 "	1245C - 321	R700321	R40H521	R40H9237	R40H3502	R40H3503
	Fa	WG	15 " x 3 "	1245C - 321	R700321	R40H521	R40H9237	R40H3502	R40H3503
	Fa	WG	15 " x 3 "	1245C - 321	R700321	R40H521	R40H9237	R40H3502	R40H3503
	Fa	WG	15 " x 3 "	1245C - 321	R700321	R40H521	R40H9237	R40H3502	R40H3503
	Fa	WG	15 " x 3 "	1245C - 321	R700321	R40H521	R40H9237	R40H3502	R40H3503
	Fa	WG	15 " x 3 "	1245C - 321	R700321	R40H521	R40H9237	R40H3502	R40H3503
	Fa	WG	15 " x 3 "	1245C - 321	R700321	R40H521	R40H9237	R40H3502	R40H3503
	Fa	WG	15 " x 3 "	1245C - 321	R700321	R40H521	R40H9237	R40H3502	R40H3503
	Fd	DN		7141 - D224	MD224[340]	69310693	60050153	NR	NR
F080, F090	Fd	DN		7149 - D236	MD236[341]	69310693	R40H5523	NR	NR
	Fd	DN		7149 - D236	MD236[341]	69310693	R40H5523	NR	NR
F090, F120	Fa	WG	15 " x 3 "	1245C - 321	R700321	R40H521	R40H9237	R40H3502	R40H3503
	Fa	WG	15 " x 3 "	1245C - 321	R700321	R40H521	R40H9237	R40H3502	R40H3503
	Fa	WG	15 " x 3 "	1245C - 321	R700321	R40H521	R40H9237	R40H3502	R40H3503
	Fa	WG	15 " x 3 "	1245C - 321	R700321	R40H521	R40H9237	R40H3502	R40H3503
R170, R175	Ra	KH	15 " x 5 "	4646 - 400	R700400	R40H595	R40H9220	R40H3538	R40H3539
	Ra	KH	15 " x 5 "	4646 - 400	R700400	R40H595	R40H9220	R40H3538	R40H3539
	Ra	KH	15 " x 5 "	4646 - 400	R700400	R40H595	R40H9220	R40H3538	R40H3539
	Ra	WG	15 " x 5 "	1252 - 346	R700346	R40H597	R40H9200	R40H3540	R40H3541
	Ra	WG	15 " x 5 "	1252 - 346	R700346	R40H597	R40H9200	R40H3540	R40H3541
R185	Ra	WG	15 " x 6 "	4596 - 381	R700381	R40H597	R40H9200	R40H3540	R40H3541
	Ra	WG	15 " x 6 "	4596 - 381	R700381	R40H597	R40H9200	R40H3540	R40H3541
	Ra	WG	15 " x 7 "	4597 - 383	R700383	R40H597	R40H9200	R40H3540	R40H3541
	Ra	WG	15 " x 7 "	4597 - 383	R700383	R40H597	R40H9200	R40H3540	R40H3541
1968									
F050, F055, F060	Fa	KH	14 " x 2-1/2 "	2060 - 361	Discontinued	R40H596	R40H9219	R40H3536	R40H3537
	Fa	KH	14 " x 2-1/2 "	2060 - 361	Discontinued	R40H596	R40H9219	R40H3536	R40H3537
F070	Fa	WG	15 " x 3 "	1245C - 321	R700321	R40H521	R40H9237	R40H3502	R40H3503
	Fa	WG	15 " x 3 "	1245C - 321	R700321	R40H521	R40H9237	R40H3502	R40H3503
	Fa	WG	15 " x 3 "	1245C - 321	R700321	R40H521	R40H9237	R40H3502	R40H3503
	Fa	WG	15 " x 3 "	1245C - 321	R700321	R40H521	R40H9237	R40H3502	R40H3503
	Fa	WG	15 " x 3 "	1245C - 321	R700321	R40H521	R40H9237	R40H3502	R40H3503
	Fa	WG	15 " x 3 "	1245C - 321	R700321	R40H521	R40H9237	R40H3502	R40H3503
	Fa	WG	15 " x 3 "	1245C - 321	R700321	R40H521	R40H9237	R40H3502	R40H3503
	Fa	WG	15 " x 3 "	1245C - 321	R700321	R40H521	R40H9237	R40H3502	R40H3503
	Fd	DN		7141 - D224	MD224[340]	69310693	60050153	NR	NR
F080, F090	Fd	DN		7149 - D236	MD236[341]	69310693	R40H5523	NR	NR
	Fd	DN		7149 - D236	MD236[341]	69310693	R40H5523	NR	NR
F090, F120	Fa	WG	15 " x 3 "	1245C - 321	R700321	R40H521	R40H9237	R40H3502	R40H3503
	Fa	WG	15 " x 3 "	1245C - 321	R700321	R40H521	R40H9237	R40H3502	R40H3503
	Fa	WG	15 " x 3 "	1245C - 321	R700321	R40H521	R40H9237	R40H3502	R40H3503
	Fa	WG	15 " x 3 "	1245C - 321	R700321	R40H521	R40H9237	R40H3502	R40H3503
R170, R175	Ra	KH	15 " x 5 "	4646 - 400	R700400	R40H595	R40H9220	R40H3538	R40H3539
	Ra	KH	15 " x 5 "	4646 - 400	R700400	R40H595	R40H9220	R40H3538	R40H3539
	Ra	KH	15 " x 5 "	4646 - 400	R700400	R40H595	R40H9220	R40H3538	R40H3539
	Ra	WG	15 " x 5 "	1252 - 346	R700346	R40H597	R40H9200	R40H3540	R40H3541
	Ra	WG	15 " x 5 "	1252 - 346	R700346	R40H597	R40H9200	R40H3540	R40H3541
R185	Ra	WG	15 " x 6 "	4596 - 381	R700381	R40H597	R40H9200	R40H3540	R40H3541
	Ra	WG	15 " x 6 "	4596 - 381	R700381	R40H597	R40H9200	R40H3540	R40H3541
	Ra	WG	15 " x 7 "	4597 - 383	R700383	R40H597	R40H9200	R40H3540	R40H3541
	Ra	WG	15 " x 7 "	4597 - 383	R700383	R40H597	R40H9200	R40H3540	R40H3541
F650 SERIES: CONVENTIONAL									
2007									
	Fd	Bosch		7655 - D786	MD786	N/R	R4011754	N/R	N/R
	Fd	Bosch		7654 - D786	MD786A	N/R	R4011754	N/R	N/R

9 - 6 Stud, Dayton Rotor, Hat Style
42 - 6 Stud, Dayton Rotor, "U" Style
341 - Use 69160445 for Disc Pad Retainer Clip
37 - Also available as a New unit
186 - 10 Stud
358 - Split System
41 - Aluminum piston
340 - Use 69160457 for Disc Pad Retainer Clip
387 - 10 Hole Rotor

MERITOR DRUM OR ROTOR NO.	CALIPER OR CYLINDER BORE SIZE	MERITOR CALIPER OR WHEEL CYLINDER (LEFT)	MERITOR CALIPER OR WHEEL CYLINDER (RIGHT)	MERITOR CALIPER OR WHEEL CYLINDER REPAIR KIT	MERITOR CALIPER PISTON	MERITOR MASTER CYLINDER	MERITOR MASTER CYLINDER KIT	MERITOR BRAKE HOSE (LEFT)	MERITOR BRAKE HOSE (RIGHT)
									FORD(Cont.)
									F600 SERIES: CONVENTIONAL(Cont.)
-	1-5/8 "	R4133338	R4133338	R4166689	NR	-	-	-	-
-	1-5/8 "	R4133338	R4133338	R4166689	NR	-	-	-	-
-	1-5/8 "	R4133338	R4133338	R4166689	NR	-	-	-	-
-	1-3/4 "	R4133400	R4133400	R4166917	NR	-	-	-	-
-	1-3/4 "	R4133400	R4133400	R4166917	NR	-	-	-	-
-	1.09375	R4133484	R4133485	R4166819	NR	-	-	-	-
-	1.09375	R4133484	R4133485	R4166819	NR	-	-	-	-
-	1-1/8 "	R4133714	R4133715	R4166926	NR	-	-	-	-
-	1-1/8 "	R4133716	R4133717	R4166926	NR	-	-	-	-
-	1-1/8 "	R4133714	R4133715	R4166926	NR	-	-	-	-
-	1-1/8 "	R4133716	R4133717	R4166926	NR	-	-	-	-
-	1-1/8 "	R4133719	R4133718	R4166926	NR	-	-	-	-
-	1-1/8 "	R4133719	R4133718	R4166926	NR	-	-	-	-
-	1-1/8 "	R4133714	R4133715	R4166926	NR	-	-	-	-
-	1-1/8 "	R4133714	R4133715	R4166926	NR	-	-	-	-
23-122700-002[9]	2-1/2 "	R424244X	R424244X[37]	60050266	69270757[41]	-	-	-	-
23-122691-002[42]	2-7/8 "	60050145X	60050145X[37]	60050146	69270702[41]	-	-	-	-
23-122703-002[186]	2-7/8 "	60050145X	60050145X[37]	60050146	69270702[41]	-	-	-	-
-	1-1/4 "	R4133581	R4133581	R4166923	NR	N/A[358]	R4122688	-	-
-	1-1/4 "	R4133720	R4133721	R4166923	NR	N/A[358]	R4122688	-	-
-	1-1/4 "	R4133720	R4133721	R4166923	NR	N/A[358]	R4122688	-	-
-	1-1/4 "	R4133581	R4133582	R4166923	NR	N/A[358]	R4122688	-	-
-	1-1/2 "	R4033607	R4033607	R4166818	NR	-	-	-	-
-	1-1/2 "	R4033607	R4033607	R4166818	NR	-	-	-	-
-	1-5/8 "	R4133606	R4133606	R415193	NR	-	-	-	-
-	1-5/8 "	R4133338	R4133338	R4166689	NR	-	-	-	-
-	1-5/8 "	R4133338	R4133338	R4166689	NR	-	-	-	-
-	1-5/8 "	R4133338	R4133338	R4166689	NR	-	-	-	-
-	1-5/8 "	R4133338	R4133338	R4166689	NR	-	-	-	-
-	1-3/4 "	R4133400	R4133400	R4166917	NR	-	-	-	-
-	1-3/4 "	R4133400	R4133400	R4166917	NR	-	-	-	-
-	1.09375	R4133484	R4133485	R4166819	NR	-	-	-	-
-	1.09375	R4133484	R4133485	R4166819	NR	-	-	-	-
-	1-1/8 "	R4133719	R4133718	R4166926	NR	-	-	-	-
-	1-1/8 "	R4133716	R4133717	R4166926	NR	-	-	-	-
-	1-1/8 "	R4133714	R4133715	R4166926	NR	-	-	-	-
-	1-1/8 "	R4133714	R4133715	R4166926	NR	-	-	-	-
-	1-1/8 "	R4133714	R4133715	R4166926	NR	-	-	-	-
-	1-1/8 "	R4133719	R4133718	R4166926	NR	-	-	-	-
-	1-1/8 "	R4133716	R4133717	R4166926	NR	-	-	-	-
-	1-1/8 "	R4133714	R4133715	R4166926	NR	-	-	-	-
23-122700-002[9]	2-1/2 "	R424244X	R424244X[37]	60050266	69270757[41]	-	-	-	-
23-122691-002[42]	2-7/8 "	60050145X	60050145X[37]	60050146	69270702[41]	-	-	-	-
23-122703-002[186]	2-7/8 "	60050145X	60050145X[37]	60050146	69270702[41]	-	-	-	-
-	1-1/4 "	R4133581	R4133582	R4166923	NR	N/A[358]	R4122688	-	-
-	1-1/4 "	R4133581	R4133581	R4166923	NR	N/A[358]	R4122688	-	-
-	1-1/4 "	R4133720	R4133721	R4166923	NR	N/A[358]	R4122688	-	-
-	1-1/4 "	R4133720	R4133721	R4166923	NR	N/A[358]	R4122688	-	-
-	1-5/8 "	R4133606	R4133606	R415193	NR	-	-	-	-
-	1-1/2 "	R4033607	R4033607	R4166818	NR	-	-	-	-
-	1-1/2 "	R4033607	R4033607	R4166818	NR	-	-	-	-
-	1-5/8 "	R4133338	R4133338	R4166689	NR	-	-	-	-
-	1-5/8 "	R4133338	R4133338	R4166689	NR	-	-	-	-
-	1-5/8 "	R4133338	R4133338	R4166689	NR	-	-	-	-
-	1-5/8 "	R4133338	R4133338	R4166689	NR	-	-	-	-
-	1-3/4 "	R4133400	R4133400	R4166917	NR	-	-	-	-
-	1-3/4 "	R4133400	R4133400	R4166917	NR	-	-	-	-
									F650 SERIES: CONVENTIONAL
23-123552-004[387]	73mm	R4255850	R4255850	R4011758	R4011757	-	-	-	-
23-123550-004[387]	66mm	R4255849	R4255849	R4011752	R4011751	-	-	-	-

MAKE MODEL YEAR AXLE CODE AXLE WEIGHT	AXLE & BRK. TYPE	BRK. MFG.	BRAKE SIZE	FMSI	MERITOR DISC PAD OR BRAKE SHOE	MERITOR GUIDE PIN OR RETURN SPRING KIT	MERITOR CALIPER HWD. KIT OR RETURN SPRING KIT	MERITOR ADJUSTER KIT (LEFT WHEEL)	MERITOR ADJUSTER KIT (RIGHT WHEEL)
FORD(Cont.)									
F650 SERIES: CONVENTIONAL(Cont.)									
2007									
	Fd	Bosch		7654 - D786	MD786A	N/R	R4011754	N/R	N/R
	Fd	Bosch		7655 - D786	MD786	N/R	R4011754	N/R	N/R
	Fd	Bosch		7655 - D786	MD786	N/R	R4011754	N/R	N/R
	Fd	Bosch		7654 - D786	MD786A	N/R	R4011754	N/R	N/R
	Rd	Bosch		7655 - D786	MD786	N/R	R4011754	N/R	N/R
	Rd	Bosch		7655 - D786	MD786	N/R	R4011754	N/R	N/R
	Rd	Bosch		7655 - D786	MD786	N/R	R4011754	N/R	N/R
	Rd	Bosch		7654 - D786	MD786A	N/R	R4011754	N/R	N/R
	Rd	Bosch		7654 - D786	MD786A	N/R	R4011754	N/R	N/R
	Rd	Bosch		7654 - D786	MD786A	N/R	R4011754	N/R	N/R
2006									
	Fd	Bosch		7655 - D786	MD786	N/R	R4011754	N/R	N/R
	Fd	Bosch		7655 - D786	MD786	N/R	R4011754	N/R	N/R
	Fd	Bosch		7654 - D786	MD786A	N/R	R4011754	N/R	N/R
	Fd	Bosch		7654 - D786	MD786A	N/R	R4011754	N/R	N/R
	Fd	Bosch		7655 - D786	MD786	N/R	R4011754	N/R	N/R
	Fd	Bosch		7654 - D786	MD786A	N/R	R4011754	N/R	N/R
	Rd	Bosch		7654 - D786	MD786A	N/R	R4011754	N/R	N/R
	Rd	Bosch		7654 - D786	MD786A	N/R	R4011754	N/R	N/R
	Rd	Bosch		7654 - D786	MD786A	N/R	R4011754	N/R	N/R
	Rd	Bosch		7655 - D786	MD786	N/R	R4011754	N/R	N/R
	Rd	Bosch		7655 - D786	MD786	N/R	R4011754	N/R	N/R
	Rd	Bosch		7655 - D786	MD786	N/R	R4011754	N/R	N/R
2005									
	Fd	Bosch		7654 - D786	MD786A	N/R	R4011754	N/R	N/R
	Fd	Bosch		7654 - D786	MD786A	N/R	R4011754	N/R	N/R
	Fd	Bosch		7654 - D786	MD786A	N/R	R4011754	N/R	N/R
	Fd	Bosch		7655 - D786	MD786	N/R	R4011754	N/R	N/R
	Fd	Bosch		7655 - D786	MD786	N/R	R4011754	N/R	N/R
	Fd	Bosch		7655 - D786	MD786	N/R	R4011754	N/R	N/R
	Rd	Bosch		7655 - D786	MD786	N/R	R4011754	N/R	N/R
	Rd	Bosch		7654 - D786	MD786A	N/R	R4011754	N/R	N/R
	Rd	Bosch		7655 - D786	MD786	N/R	R4011754	N/R	N/R
	Rd	Bosch		7654 - D786	MD786A	N/R	R4011754	N/R	N/R
	Rd	Bosch		7654 - D786	MD786A	N/R	R4011754	N/R	N/R
	Rd	Bosch		7655 - D786	MD786	N/R	R4011754	N/R	N/R
2004									
	Fd	Bosch		7654 - D786	MD786A	N/R	R4011754	N/R	N/R
	Fd	Bosch		7655 - D786	MD786	N/R	R4011754	N/R	N/R
	Fd	Bosch		7655 - D786	MD786	N/R	R4011754	N/R	N/R
	Fd	Bosch		7655 - D786	MD786	N/R	R4011754	N/R	N/R
	Fd	Bosch		7654 - D786	MD786A	N/R	R4011754	N/R	N/R
	Fd	Bosch		7654 - D786	MD786A	N/R	R4011754	N/R	N/R
	Rd	Bosch		7654 - D786	MD786A	N/R	R4011754	N/R	N/R
	Rd	Bosch		7655 - D786	MD786	N/R	R4011754	N/R	N/R
	Rd	Bosch		7654 - D786	MD786A	N/R	R4011754	N/R	N/R
	Rd	Bosch		7654 - D786	MD786A	N/R	R4011754	N/R	N/R
	Rd	Bosch		7655 - D786	MD786	N/R	R4011754	N/R	N/R
	Rd	Bosch		7655 - D786	MD786	N/R	R4011754	N/R	N/R
2003									
	Fd	Meritor		7636 - D769	MD769	N/R	R4011729	N/R	N/R
	Rd	Meritor		7141 - D224	MD224	60050153	69160457	N/R	N/R
21,000, 23,000 lb Axle	Rd	Meritor		7636 - D769	MD769	N/R	R4011729	N/R	N/R
17,5000, 19,000 lb Axle	Rd	Meritor		7636 - D769	MD769	N/R	R4011729	N/R	N/R
2002									
	Fd	Meritor		7636 - D769	MD769	N/R	R4011729	N/R	N/R
	Rd	Meritor		7141 - D224	MD224	60050153	69160457	N/R	N/R
21,000, 23,000 lb Axle	Rd	Meritor		7636 - D769	MD769	N/R	R4011729	N/R	N/R
17,5000, 19,000 lb Axle	Rd	Meritor		7636 - D769	MD769	N/R	R4011729	N/R	N/R
2001									
	Fd	Meritor		7636 - D769	MD769	N/R	R4011729	N/R	N/R
	Rd	Meritor		7141 - D224	MD224	60050153	69160457	N/R	N/R
21,000, 23,000 lb Axle	Rd	Meritor		7636 - D769	MD769	N/R	R4011729	N/R	N/R
17,5000, 19,000 lb Axle	Rd	Meritor		7636 - D769	MD769	N/R	R4011729	N/R	N/R

266 - 10 Stud, Hat Shaped
365 - Caliper Loaded with Hardware and Disc Pads
387 - 10 Hole Rotor
388 - 5 Hole Rotor

MERITOR DRUM OR ROTOR NO.	CALIPER OR CYLINDER BORE SIZE	MERITOR CALIPER OR WHEEL CYLINDER (LEFT)	MERITOR CALIPER OR WHEEL CYLINDER (RIGHT)	MERITOR CALIPER OR WHEEL CYLINDER REPAIR KIT	MERITOR CALIPER PISTON	MERITOR MASTER CYLINDER	MERITOR MASTER CYLINDER KIT	MERITOR BRAKE HOSE (LEFT)	MERITOR BRAKE HOSE (RIGHT)
									FORD(Cont.)
									F650 SERIES: CONVENTIONAL(Cont.)
23-123552-004[387]	66mm	R4255849	R4255849	R4011752	R4011751	-	-	-	-
R44141476[388]	73mm	R4255850	R4255850	R4011758	R4011757	-	-	-	-
23-123550-004[387]	73mm	R4255850	R4255850	R4011758	R4011757	-	-	-	-
R44141476[388]	66mm	R4255849	R4255849	R4011752	R4011751	-	-	-	-
R44141476[388]	73mm	R4255850	R4255850	R4011758	R4011757	-	-	-	-
23-123552-004[387]	73mm	R4255850	R4255850	R4011758	R4011757	-	-	-	-
23-123550-004[387]	73mm	R4255850	R4255850	R4011758	R4011757	-	-	-	-
R44141476[388]	66mm	R4255849	R4255849	R4011752	R4011751	-	-	-	-
23-123550-004[387]	66mm	R4255849	R4255849	R4011752	R4011751	-	-	-	-
23-123552-004[387]	66mm	R4255849	R4255849	R4011752	R4011751	-	-	-	-
23-123552-004[387]	73mm	R4255850	R4255850	R4011758	R4011757	-	-	-	-
23-123550-004[387]	73mm	R4255850	R4255850	R4011758	R4011757	-	-	-	-
R44141476[388]	66mm	R4255849	R4255849	R4011752	R4011751	-	-	-	-
23-123552-004[387]	66mm	R4255849	R4255849	R4011752	R4011751	-	-	-	-
R44141476[388]	73mm	R4255850	R4255850	R4011758	R4011757	-	-	-	-
23-123550-004[387]	66mm	R4255849	R4255849	R4011752	R4011751	-	-	-	-
23-123552-004[387]	66mm	R4255849	R4255849	R4011752	R4011751	-	-	-	-
23-123550-004[387]	66mm	R4255849	R4255849	R4011752	R4011751	-	-	-	-
R44141476[388]	66mm	R4255849	R4255849	R4011752	R4011751	-	-	-	-
23-123552-004[387]	73mm	R4255850	R4255850	R4011758	R4011757	-	-	-	-
23-123550-004[387]	73mm	R4255850	R4255850	R4011758	R4011757	-	-	-	-
R44141476[388]	73mm	R4255850	R4255850	R4011758	R4011757	-	-	-	-
23-123550-004[387]	66mm	R4255849	R4255849	R4011752	R4011751	-	-	-	-
23-123552-004[387]	66mm	R4255849	R4255849	R4011752	R4011751	-	-	-	-
R44141476[388]	66mm	R4255849	R4255849	R4011752	R4011751	-	-	-	-
R44141476[388]	73mm	R4255850	R4255850	R4011758	R4011757	-	-	-	-
23-123552-004[387]	73mm	R4255850	R4255850	R4011758	R4011757	-	-	-	-
23-123550-004[387]	73mm	R4255850	R4255850	R4011758	R4011757	-	-	-	-
23-123552-004[387]	73mm	R4255850	R4255850	R4011758	R4011757	-	-	-	-
R44141476[388]	66mm	R4255849	R4255849	R4011752	R4011751	-	-	-	-
23-123550-004[387]	73mm	R4255850	R4255850	R4011758	R4011757	-	-	-	-
23-123550-004[387]	66mm	R4255849	R4255849	R4011752	R4011751	-	-	-	-
23-123552-004[387]	66mm	R4255849	R4255849	R4011752	R4011751	-	-	-	-
R44141476[388]	73mm	R4255850	R4255850	R4011758	R4011757	-	-	-	-
23-123552-004[387]	66mm	R4255849	R4255849	R4011752	R4011751	R413013761	-	-	-
R44141476[388]	73mm	R4255850	R4255850	R4011758	R4011757	R413013761	-	-	-
23-123550-004[387]	73mm	R4255850	R4255850	R4011758	R4011757	R413013761	-	-	-
23-123552-004[387]	73mm	R4255850	R4255850	R4011758	R4011757	R413013761	-	-	-
R44141476[388]	66mm	R4255849	R4255849	R4011752	R4011751	R413013761	-	-	-
23-123550-004[387]	66mm	R4255849	R4255849	R4011752	R4011751	R413013761	-	-	-
23-123552-004[387]	66mm	R4255849	R4255849	R4011752	R4011751	R413013761	-	-	-
R44141476[388]	73mm	R4255850	R4255850	R4011758	R4011757	R413013761	-	-	-
R44141476[388]	66mm	R4255849	R4255849	R4011752	R4011751	R413013761	-	-	-
23-123550-004[387]	66mm	R4255849	R4255849	R4011752	R4011751	R413013761	-	-	-
R44141476[388]	66mm	R4255849	R4255849	R4011752	R4011751	R413013761	-	-	-
23-123552-004[387]	73mm	R4255850	R4255850	R4011758	R4011757	R413013761	-	-	-
23-123550-004[387]	73mm	R4255850	R4255850	R4011758	R4011757	R413013761	-	-	-
23-123498-002[266]	70mm	60450469002	60450468002[365]	R4011730	60050334	R413013761	-	-	-
23-123528-002	2.50"	60050150	60050150	60050266	69270757	R413013761	-	-	-
23-123461-002	70mm	60450469002	60450468002[365]	R4011730	60050334	R413013761	-	-	-
23-123489-002[387]	64mm	60450474001	60450473001[365]	R4011731	R4011511	R413013761	-	-	-
23-123498-002[266]	70mm	60450469002	60450468002[365]	R4011730	60050334	R413013761	-	-	-
23-123528-002	2.50"	60050150	60050150	60050266	69270757	R413013761	-	-	-
23-123461-002	70mm	60450469002	60450468002[365]	R4011730	60050334	R413013761	-	-	-
23-123489-002[387]	64mm	60450474001	60450473001[365]	R4011731	R4011511	R413013761	-	-	-
23-123498-002[266]	70mm	60450469002	60450468002[365]	R4011730	60050334	R413013761	-	-	-
23-123528-002	2.50"	60050150	60050150	60050266	69270757	R413013761	-	-	-
23-123461-002	70mm	60450469002	60450468002[365]	R4011730	60050334	R413013761	-	-	-
23-123489-002[387]	64mm	60450474001	60450473001[365]	R4011731	R4011511	R413013761	-	-	-

MAKE MODEL YEAR AXLE CODE AXLE WEIGHT	AXLE & BRK. TYPE	BRK. MFG.	BRAKE SIZE	FMSI	MERITOR DISC PAD OR BRAKE SHOE	MERITOR GUIDE PIN OR RETURN SPRING KIT	MERITOR CALIPER HWD. KIT OR RETURN SPRING KIT	MERITOR ADJUSTER KIT (LEFT WHEEL)	MERITOR ADJUSTER KIT (RIGHT WHEEL)
FORD(Cont.)									
F650 SERIES: CONVENTIONAL(Cont.)									
2000									
	Fd	Meritor		7636 - D769	MD769	N/R	R4011729	N/R	N/R
	Rd	Meritor		7141 - D224	MD224	60050153	69160457	N/R	N/R
21,000, 23,000 lb Axle	Rd	Meritor		7636 - D769	MD769	N/R	R4011729	N/R	N/R
17,5000, 19,000 lb Axle	Rd	Meritor		7636 - D769	MD769	N/R	R4011729	N/R	N/R
F700 SERIES: CONVENTIONAL									
1995									
	Fd	DN		7149 - D236	MD236[341]	69310693	69310782	NR	NR
	Fd	DN		7149 - D236	MD236[341]	69310693	69310782	NR	NR
	Fd	DN		7141 - D224	MD224[340]	69310693	60050153	NR	NR
	Fd	DN		7149 - D236	MD236[341]	69310693	69310782	NR	NR
	Ra	LG	15 " x 5 "	4528A - 542	N/A	R40H618	NR	SP7888S	SP7888S
	Ra	LG	15 " x 5 "	4528A - 542	N/A	R40H618	NR	NR	NR
	Ra	LG	15 " x 6 "	4504A - 543	N/A	R40H618	NR	SP7887S	SP7887S
	Ra	LG	15 " x 6 "	4504A - 543	N/A	R40H618	NR	NR	NR
	Ra	LG	15 " x 7 "	4505A - 544	N/A	R40H618	NR	NR	NR
	Ra	LG	15 " x 7 "	4505A - 544	N/A	R40H618	NR	SP7887S	SP7887S
1994									
	Fd	DN		7149 - D236	MD236[341]	69310693	69310782	NR	NR
	Fd	DN		7149 - D236	MD236[341]	69310693	69310782	NR	NR
	Fd	DN		7141 - D224	MD224[340]	69310693	60050153	NR	NR
	Fd	DN		7149 - D236	MD236[341]	69310693	69310782	NR	NR
	Ra	LG	15 " x 5 "	4528A - 542	N/A	R40H618	NR	SP7888S	SP7888S
	Ra	LG	15 " x 5 "	4528A - 542	N/A	R40H618	NR	NR	NR
	Ra	LG	15 " x 6 "	4504A - 543	N/A	R40H618	NR	SP7887S	SP7887S
	Ra	LG	15 " x 6 "	4504A - 543	N/A	R40H618	NR	NR	NR
	Ra	LG	15 " x 7 "	4505A - 544	N/A	R40H618	NR	SP7887S	SP7887S
	Ra	LG	15 " x 7 "	4505A - 544	N/A	R40H618	NR	NR	NR
1993									
	Fd	DN		7141 - D224	MD224[340]	69310693	60050153	NR	NR
	Fd	DN		7149 - D236	MD236[341]	69310693	69310782	NR	NR
	Fd	DN		7149 - D236	MD236[341]	69310693	69310782	NR	NR
	Fd	DN		7149 - D236	MD236[341]	69310693	69310782	NR	NR
	Ra	LG	15 " x 5 "	4528A - 542	N/A	R40H618	NR	SP7888S	SP7888S
	Ra	LG	15 " x 5 "	4528A - 542	N/A	R40H618	NR	NR	NR
	Ra	LG	15 " x 6 "	4504A - 543	N/A	R40H618	NR	SP7887S	SP7887S
	Ra	LG	15 " x 6 "	4504A - 543	N/A	R40H618	NR	NR	NR
	Ra	LG	15 " x 7 "	4505A - 544	N/A	R40H618	NR	NR	NR
	Ra	LG	15 " x 7 "	4505A - 544	N/A	R40H618	NR	SP7887S	SP7887S
1992									
	Fd	DN		7149 - D236	MD236[341]	69310693	69310782	NR	NR
	Fd	DN		7149 - D236	MD236[341]	69310693	69310782	NR	NR
	Fd	DN		7149 - D236	MD236[341]	69310693	69310782	NR	NR
	Fd	DN		7141 - D224	MD224[340]	69310693	60050153	NR	NR
	Ra	LG	15 " x 5 "	4528A - 542	N/A	R40H618	NR	SP7888S	SP7888S
	Ra	LG	15 " x 5 "	4528A - 542	N/A	R40H618	NR	NR	NR
	Ra	LG	15 " x 6 "	4504A - 543	N/A	R40H618	NR	SP7887S	SP7887S
	Ra	LG	15 " x 6 "	4504A - 543	N/A	R40H618	NR	NR	NR
	Ra	LG	15 " x 7 "	4505A - 544	N/A	R40H618	NR	NR	NR
	Ra	LG	15 " x 7 "	4505A - 544	N/A	R40H618	NR	SP7887S	SP7887S
1991									
	Fd	DN		7149 - D236	MD236[341]	69310693	69310782	NR	NR
	Fd	DN		7149 - D236	MD236[341]	69310693	69310782	NR	NR
	Fd	DN		7141 - D224	MD224[340]	69310693	60050153	NR	NR
	Fd	DN		7149 - D236	MD236[341]	69310693	69310782	NR	NR
	Ra	LG	15 " x 5 "	4528A - 542	N/A	R40H618	NR	SP7888S	SP7888S
	Ra	LG	15 " x 5 "	4528A - 542	N/A	R40H618	NR	NR	NR
	Ra	LG	15 " x 6 "	4504A - 543	N/A	R40H618	NR	SP7887S	SP7887S
	Ra	LG	15 " x 6 "	4504A - 543	N/A	R40H618	NR	NR	NR
	Ra	LG	15 " x 7 "	4505A - 544	N/A	R40H618	NR	NR	NR
	Ra	LG	15 " x 7 "	4505A - 544	N/A	R40H618	NR	SP7887S	SP7887S
1990									
	Fd	DN		7141 - D224	MD224[340]	69310693	60050153	NR	NR
	Fd	DN		7149 - D236	MD236[341]	69310693	69310782	NR	NR

9 - 6 Stud, Dayton Rotor, Hat Style
53 - Power Brakes
188 - 6 Stud, 9.251" Hub
37 - Also available as a New unit
186 - 10 Stud
204 - Right Hand; use E-4057 for Left Hand Expander Kits
41 - Aluminum piston
187 - 6 Stud, 6.443" Hub
266 - 10 Stud, Hat Shaped

MERITOR DRUM OR ROTOR NO.	CALIPER OR CYLINDER BORE SIZE	MERITOR CALIPER OR WHEEL CYLINDER (LEFT)	MERITOR CALIPER OR WHEEL CYLINDER (RIGHT)	MERITOR CALIPER OR WHEEL CYLINDER REPAIR KIT	MERITOR CALIPER PISTON	MERITOR MASTER CYLINDER	MERITOR MASTER CYLINDER KIT	MERITOR BRAKE HOSE (LEFT)	MERITOR BRAKE HOSE (RIGHT)
									FORD(Cont.)
									F650 SERIES: CONVENTIONAL(Cont.)
23-123498-002[266]	70mm	60450469002	60450468002[365]	R4011730	60050334	R413013761	-	-	-
23-123528-002	2.50"	60050150	60050150	60050266	69270757	R413013761	-	-	-
23-123461-002	70mm	60450469002	60450468002[365]	R4011730	60050334	R413013761	-	-	-
23-123489-002[387]	64mm	60450474001	60450473001[365]	R4011731	R4011511	R413013761	-	-	-
									F700 SERIES: CONVENTIONAL
23-122743-002[187]	2-7/8 "	60050145X	60050145X[37]	60050146	69270702[41]	-	-	R4577461	R4577461
23-122703-002[186]	2-7/8 "	60050145X	60050145X[37]	60050146	69270702[41]	-	-	R4577461	R4577461
23-122700-002[9]	2-1/2 "	R424244X	R424244X[37]	60050266	69270757[41]	-	-	R4577461	R4577461
23-122691-002[188]	2-7/8 "	60050145X	60050145X[37]	60050146	69270702[41]	-	-	R4577461	R4577461
N/A	1-5/8 "	201185	201186[329]	SP7895S	NR	-	-	R4577870	R4577870
N/A	1-5/8 "	201181	201182	SP7895S	NR	-	-	R4577870	R4577870
N/A	1-3/4 "	201183X	201184X[329]	SP7873S	NR	-	-	R4577870	R4577870
N/A	1-3/4 "	201179X	201180X	SP7873S	SP7880S[204]	-	-	R4577870	R4577870
N/A	1-3/4 "	201179X	201180X	SP7873S	SP7880S[204]	-	-	R4577870	R4577870
N/A	1-3/4 "	201183X	201184X[329]	SP7873S	NR	-	-	R4577870	R4577870
23-122703-002[186]	2-7/8 "	60050145X	60050145X[37]	60050146	69270702[41]	-	-	R4577461	R4577461
23-122691-002[188]	2-7/8 "	60050145X	60050145X[37]	60050146	69270702[41]	-	-	R4577461	R4577461
23-122700-002[9]	2-1/2 "	R424244X	R424244X[37]	60050266	69270757[41]	-	-	R4577461	R4577461
23-122743-002[187]	2-7/8 "	60050145X	60050145X[37]	60050146	69270702[41]	-	-	R4577461	R4577461
N/A	1-5/8 "	201185	201186[329]	SP7895S	NR	-	-	R4577870	R4577870
N/A	1-5/8 "	201181	201182	SP7895S	NR	-	-	R4577870	R4577870
N/A	1-3/4 "	201183X	201184X[329]	SP7873S	NR	-	-	R4577870	R4577870
N/A	1-3/4 "	201179X	201180X	SP7873S	SP7880S[204]	-	-	R4577870	R4577870
N/A	1-3/4 "	201183X	201184X[329]	SP7873S	NR	-	-	R4577870	R4577870
N/A	1-3/4 "	201179X	201180X	SP7873S	SP7880S[204]	-	-	R4577870	R4577870
23-122700-002[9]	2-1/2 "	R424244X	R424244X[37]	60050266	69270757[41]	-	-	R4577461	R4577461
23-122743-002[187]	2-7/8 "	60050145X	60050145X[37]	60050146	69270702[41]	-	-	R4577461	R4577461
23-122703-002[186]	2-7/8 "	60050145X	60050145X[37]	60050146	69270702[41]	-	-	R4577461	R4577461
23-122691-002[188]	2-7/8 "	60050145X	60050145X[37]	60050146	69270702[41]	-	-	R4577461	R4577461
N/A	1-5/8 "	201185	201186[329]	SP7895S	NR	-	-	R4577870	R4577870
N/A	1-5/8 "	201181	201182	SP7895S	NR	-	-	R4577870	R4577870
N/A	1-3/4 "	201183X	201184X[329]	SP7873S	NR	-	-	R4577870	R4577870
N/A	1-3/4 "	201179X	201180X	SP7873S	SP7880S[204]	-	-	R4577870	R4577870
N/A	1-3/4 "	201179X	201180X	SP7873S	SP7880S[204]	-	-	R4577870	R4577870
N/A	1-3/4 "	201183X	201184X[329]	SP7873S	NR	-	-	R4577870	R4577870
23-122703-002[186]	2-7/8 "	60050145X	60050145X[37]	60050146	69270702[41]	-	-	R4577461	R4577461
23-122743-002[187]	2-7/8 "	60050145X	60050145X[37]	60050146	69270702[41]	-	-	R4577461	R4577461
23-122691-002[188]	2-7/8 "	60050145X	60050145X[37]	60050146	69270702[41]	-	-	R4577461	R4577461
23-122700-002[9]	2-1/2 "	R424244X	R424244X[37]	60050266	69270757[41]	-	-	R4577461	R4577461
N/A	1-5/8 "	201185	201186[329]	SP7895S	NR	-	-	R4577870	R4577870
N/A	1-5/8 "	201181	201182	SP7895S	NR	-	-	R4577870	R4577870
N/A	1-3/4 "	201183X	201184X[329]	SP7873S	NR	-	-	R4577870	R4577870
N/A	1-3/4 "	201179X	201180X	SP7873S	SP7880S[204]	-	-	R4577870	R4577870
N/A	1-3/4 "	201179X	201180X	SP7873S	SP7880S[204]	-	-	R4577870	R4577870
N/A	1-3/4 "	201183X	201184X[329]	SP7873S	NR	-	-	R4577870	R4577870
23-122691-002[188]	2-7/8 "	60050145X	60050145X[37]	60050146	69270702[41]	-	-	R4577461	R4577461
23-122743-002[187]	2-7/8 "	60050145X	60050145X[37]	60050146	69270702[41]	-	-	R4577461	R4577461
23-122700-002[9]	2-1/2 "	R424244X	R424244X[37]	60050266	69270757[41]	-	-	R4577461	R4577461
23-122703-002[186]	2-7/8 "	60050145X	60050145X[37]	60050146	69270702[41]	-	-	R4577461	R4577461
N/A	1-5/8 "	201185	201186[329]	SP7895S	NR	-	-	R4577870	R4577870
N/A	1-5/8 "	201181	201182	SP7895S	NR	-	-	R4577870	R4577870
N/A	1-3/4 "	201183X	201184X[329]	SP7873S	NR	-	-	R4577870	R4577870
N/A	1-3/4 "	201179X	201180X	SP7873S	SP7880S[204]	-	-	R4577870	R4577870
N/A	1-3/4 "	201179X	201180X	SP7873S	SP7880S[204]	-	-	R4577870	R4577870
N/A	1-3/4 "	201183X	201184X[329]	SP7873S	NR	-	-	R4577870	R4577870
23-122700-002[9]	2-1/2 "	R424244X	R424244X[37]	60050266	69270757[41]	R4111999[53]	R4122386	R4577461	R4577461
23-122743-002[187]	2-7/8 "	60050145X	60050145X[37]	60050146	69270702[41]	R4111999[53]	R4122386	R4577461	R4577461

329 - Forward
340 - Use 69160457 for Disc Pad Retainer Clip
341 - Use 69160445 for Disc Pad Retainer Clip
365 - Caliper Loaded with Hardware and Disc Pads
387 - 10 Hole Rotor

MAKE MODEL YEAR AXLE CODE AXLE WEIGHT	AXLE & BRK. TYPE	BRK. MFG.	BRAKE SIZE	FMSI	MERITOR DISC PAD OR BRAKE SHOE	MERITOR GUIDE PIN OR RETURN SPRING KIT	MERITOR CALIPER HWD. KIT OR RETURN SPRING KIT	MERITOR ADJUSTER KIT (LEFT WHEEL)	MERITOR ADJUSTER KIT (RIGHT WHEEL)
FORD(Cont.)									
F700 SERIES: CONVENTIONAL(Cont.)									
1990									
	Fd	DN		7149 - D236	MD236[341]	69310693	69310782	NR	NR
	Fd	DN		7149 - D236	MD236[341]	69310693	69310782	NR	NR
	Ra	LG	15 " x 5 "	4528A - 542	N/A	R40H618	NR	SP7888S	SP7888S
	Ra	LG	15 " x 5 "	4528A - 542	N/A	R40H618	NR	NR	NR
	Ra	LG	15 " x 6 "	4504A - 543	N/A	R40H618	NR	NR	NR
	Ra	LG	15 " x 6 "	4504A - 543	N/A	R40H618	NR	SP7887S	SP7887S
	Ra	LG	15 " x 7 "	4505A - 544	N/A	R40H618	NR	SP7887S	SP7887S
	Ra	LG	15 " x 7 "	4505A - 544	N/A	R40H618	NR	NR	NR
1989									
	Fd	DN		7149 - D236	MD236[341]	69310693	69310782[43]	NR	NR
	Fd	DN		7149 - D236	MD236[341]	69310693	69310782[43]	NR	NR
	Fd	DN		7149 - D236	MD236[341]	69310693	69310782[43]	NR	NR
	Fd	DN		7141 - D224	MD224[340]	69310693	60050153	NR	NR
	Ra	LG	15 " x 5 "	4528A - 542	N/A	R40H618	NR	NR	NR
	Ra	LG	15 " x 5 "	4528A - 542	N/A	R40H618	NR	SP7888S	SP7888S
	Ra	LG	15 " x 6 "	4504A - 543	N/A	R40H618	NR	SP7887S	SP7887S
	Ra	LG	15 " x 6 "	4504A - 543	N/A	R40H618	NR	NR	NR
	Ra	LG	15 " x 7 "	4505A - 544	N/A	R40H618	NR	NR	NR
	Ra	LG	15 " x 7 "	4505A - 544	N/A	R40H618	NR	SP7887S	SP7887S
1988									
	Fd	DN		7149 - D236	MD236[341]	69310693	69310782[43]	NR	NR
	Fd	DN		7149 - D236	MD236[341]	69310693	69310782[43]	NR	NR
	Fd	DN		7141 - D224	MD224[340]	69310693	60050153	NR	NR
	Fd	DN		7149 - D236	MD236[341]	69310693	69310782[43]	NR	NR
	Ra	LG	15 " x 5 "	4528A - 542	N/A	R40H618	NR	SP7888S	SP7888S
	Ra	LG	15 " x 5 "	4528A - 542	N/A	R40H618	NR	NR	NR
	Ra	LG	15 " x 6 "	4504A - 543	N/A	R40H618	NR	SP7887S	SP7887S
	Ra	LG	15 " x 6 "	4504A - 543	N/A	R40H618	NR	NR	NR
	Ra	LG	15 " x 7 "	4505A - 544	N/A	R40H618	NR	SP7887S	SP7887S
	Ra	LG	15 " x 7 "	4505A - 544	N/A	R40H618	NR	NR	NR
1987									
	Fd	DN		7141 - D224	MD224[340]	69310693	60050153	NR	NR
	Fd	DN		7149 - D236	MD236[341]	69310693	69310782[43]	NR	NR
	Fd	DN		7149 - D236	MD236[341]	69310693	69310782[43]	NR	NR
	Fd	DN		7149 - D236	MD236[341]	69310693	69310782[43]	NR	NR
	Ra	LG	15 " x 5 "	4528A - 542	N/A	R40H618	NR	SP7888S	SP7888S
	Ra	LG	15 " x 5 "	4528A - 542	N/A	R40H618	NR	NR	NR
	Ra	LG	15 " x 6 "	4504A - 543	N/A	R40H618	NR	SP7887S	SP7887S
	Ra	LG	15 " x 6 "	4504A - 543	N/A	R40H618	NR	NR	NR
	Ra	LG	15 " x 7 "	4505A - 544	N/A	R40H618	NR	SP7887S	SP7887S
	Ra	LG	15 " x 7 "	4505A - 544	N/A	R40H618	NR	NR	NR
1986									
	Fd	DN		7141 - D224	MD224[340]	69310693	60050153	NR	NR
	Fd	DN		7149 - D236	MD236[341]	69310693	69310782	NR	NR
	Fd	DN		7149 - D236	MD236[341]	69310693	69310782	NR	NR
	Fd	DN		7149 - D236	MD236[341]	69310693	69310782	NR	NR
	Ra	LG	15 " x 5 "	4528A - 542	N/A	R40H618	NR	NR	NR
	Ra	LG	15 " x 5 "	4528A - 542	N/A	R40H618	NR	SP7888S	SP7888S
	Ra	LG	15 " x 6 "	4504A - 543	N/A	R40H618	NR	NR	NR
	Ra	LG	15 " x 6 "	4504A - 543	N/A	R40H618	NR	SP7887S	SP7887S
	Ra	LG	15 " x 6 "	4504A - 543	N/A	R40H618	NR	NR	NR
	Ra	LG	15 " x 6 "	4504A - 543	N/A	R40H618	NR	SP7887S	SP7887S
	Ra	LG	15 " x 7 "	4505A - 544	N/A	R40H618	NR	SP7887S	SP7887S
	Ra	LG	15 " x 7 "	4505A - 544	N/A	R40H618	NR	SP7887S	SP7887S
	Ra	LG	15 " x 7 "	4505A - 544	N/A	R40H618	NR	NR	NR
	Ra	LG	15 " x 7 "	4505A - 544	N/A	R40H618	NR	NR	NR
F050, F055, F060	Fa	KH	14 " x 2-1/2 "	2060 - 361	Discontinued	R40H596	R40H9219	R40H3536	R40H3537
F070	Fa	WG	15 " x 3 "	1245C - 321	R700321	R40H521	R40H9237	R40H3502	R40H3503
	Fa	WG	15 " x 3 "	1245C - 321	R700321	R40H521	R40H9237	R40H3502	R40H3503
	Fd	DN		7141 - D224	MD224[340]	69310693	60050153	NR	NR
F080, F090	Fd	DN		7149 - D236	MD236[341]	69310693	69310782	NR	NR
	Fd	DN		7149 - D236	MD236[341]	69310693	69310782	NR	NR
R170, R175	Ra	KH	15 " x 5 "	4646 - 400	R700400	R40H595	R40H9220	R40H3538	R40H3539
	Ra	WG	15 " x 5 "	1252 - 346	R700346	R40H597	R40H9200	R40H3540	R40H3541

9 - 6 Stud, Dayton Rotor, Hat Style
43 - For Applications Taking A Longer Shim, Use R404151706
187 - 6 Stud, 6.443" Hub
37 - Also available as a New unit
53 - Power Brakes
188 - 6 Stud, 9.251" Hub
41 - Aluminum piston
186 - 10 Stud
204 - Right Hand; use E-4057 for Left Hand Expander Kits

MERITOR DRUM OR ROTOR NO.	CALIPER OR CYLINDER BORE SIZE	MERITOR CALIPER OR WHEEL CYLINDER (LEFT)	MERITOR CALIPER OR WHEEL CYLINDER (RIGHT)	MERITOR CALIPER OR WHEEL CYLINDER REPAIR KIT	MERITOR CALIPER PISTON	MERITOR MASTER CYLINDER	MERITOR MASTER CYLINDER KIT	MERITOR BRAKE HOSE (LEFT)	MERITOR BRAKE HOSE (RIGHT)
									FORD(Cont.)
									F700 SERIES: CONVENTIONAL(Cont.)
23-122703-002[186]	2-7/8 "	60050145X	60050145X[37]	60050146	69270702[41]	R4111999[53]	R4122386	R4577461	R4577461
23-122691-002[188]	2-7/8 "	60050145X	60050145X[37]	60050146	69270702[41]	R4111999[53]	R4122386	R4577461	R4577461
N/A	1-5/8 "	201185	201186[329]	SP7895S	NR	-	-	R4577870	R4577870
N/A	1-5/8 "	201181	201182	SP7895S	NR	-	-	R4577870	R4577870
N/A	1-3/4 "	201179X	201180X	SP7873S	SP7880S[204]	-	-	R4577870	R4577870
N/A	1-3/4 "	201183X	201184X[329]	SP7873S	NR	-	-	R4577870	R4577870
N/A	1-3/4 "	201183X	201184X[329]	SP7873S	NR	-	-	R4577870	R4577870
N/A	1-3/4 "	201179X	201180X	SP7873S	SP7880S[204]	-	-	R4577870	R4577870
23-122743-002[187]	2-7/8 "	60050145X	60050145X[37]	60050146	69270702[41]	R4111999[53]	R4122386	R4577461	R4577461
23-122703-002[186]	2-7/8 "	60050145X	60050145X[37]	60050146	69270702[41]	R4111999[53]	R4122386	R4577461	R4577461
23-122691-002[188]	2-7/8 "	60050145X	60050145X[37]	60050146	69270702[41]	R4111999[53]	R4122386	R4577461	R4577461
23-122700-002[9]	2-1/2 "	R424244X	R424244X[37]	60050266	69270757[41]	R4111999[53]	R4122386	R4577461	R4577461
N/A	1-5/8 "	201181	201182	SP7895S	NR	-	-	N/A	N/A
N/A	1-5/8 "	201185	201186[329]	SP7895S	NR	-	-	N/A	N/A
N/A	1-3/4 "	201183X	201184X[329]	SP7873S	NR	-	-	N/A	N/A
N/A	1-3/4 "	201179X	201180X	SP7873S	SP7880S[204]	-	-	N/A	N/A
N/A	1-3/4 "	201179X	201180X	SP7873S	SP7880S[204]	-	-	N/A	N/A
N/A	1-3/4 "	201183X	201184X[329]	SP7873S	NR	-	-	N/A	N/A
23-122743-002[187]	2-7/8 "	60050145X	60050145X[37]	60050146	69270702[41]	R4111999[53]	R4122386	R4577461	R4577461
23-122703-002[186]	2-7/8 "	60050145X	60050145X[37]	60050146	69270702[41]	R4111999[53]	R4122386	R4577461	R4577461
23-122700-002[9]	2-1/2 "	R424244X	R424244X[37]	60050266	69270757[41]	R4111999[53]	R4122386	R4577461	R4577461
23-122691-002[188]	2-7/8 "	60050145X	60050145X[37]	60050146	69270702[41]	R4111999[53]	R4122386	R4577461	R4577461
N/A	1-5/8 "	201185	201186[329]	SP7895S	NR	-	-	N/A	N/A
N/A	1-5/8 "	201181	201182	SP7895S	NR	-	-	N/A	N/A
N/A	1-3/4 "	201183X	201184X[329]	SP7873S	NR	-	-	N/A	N/A
N/A	1-3/4 "	201179X	201180X	SP7873S	SP7880S[204]	-	-	N/A	N/A
N/A	1-3/4 "	201183X	201184X[329]	SP7873S	NR	-	-	N/A	N/A
N/A	1-3/4 "	201179X	201180X	SP7873S	SP7880S[204]	-	-	N/A	N/A
23-122700-002[9]	2-1/2 "	R424244X	R424244X[37]	60050266	69270757[41]	R4111999[53]	R4122386	R4577461	R4577461
23-122743-002[187]	2-7/8 "	60050145X	60050145X[37]	60050146	69270702[41]	R4111999[53]	R4122386	R4577461	R4577461
23-122703-002[186]	2-7/8 "	60050145X	60050145X[37]	60050146	69270702[41]	R4111999[53]	R4122386	R4577461	R4577461
23-122691-002[188]	2-7/8 "	60050145X	60050145X[37]	60050146	69270702[41]	R4111999[53]	R4122386	R4577461	R4577461
N/A	1-5/8 "	201181	201182	SP7895S	NR	-	-	N/A	N/A
N/A	1-5/8 "	201185	201186[329]	SP7895S	NR	-	-	N/A	N/A
N/A	1-3/4 "	201179X	201180X	SP7873S	SP7880S[204]	-	-	N/A	N/A
N/A	1-3/4 "	201183X	201184X[329]	SP7873S	NR	-	-	N/A	N/A
N/A	1-3/4 "	201179X	201180X	SP7873S	SP7880S[204]	-	-	N/A	N/A
N/A	1-3/4 "	201183X	201184X[329]	SP7873S	NR	-	-	N/A	N/A
N/A	1-3/4 "	201183X	201184X[329]	SP7873S	NR	-	-	N/A	N/A
N/A	1-3/4 "	201183X	201184X[329]	SP7873S	NR	-	-	N/A	N/A
N/A	1-3/4 "	201179X	201180X	SP7873S	SP7880S[204]	-	-	N/A	N/A
N/A	1-3/4 "	201179X	201180X	SP7873S	SP7880S[204]	-	-	N/A	N/A
N/A	1.09375	R4133484	R4133485	R4166819	NR	-	-	-	-
N/A	1-1/8 "	R4133716	R4133717	R4166926	NR	-	-	-	-
N/A	1-1/8 "	R4133714	R4133715	R4166926	NR	-	-	-	-
23-122700-002[9]	2-1/2 "	R424244X	R424244X[37]	60050266	69270757[41]	R4111999[53]	R4122386	R4577461	R4577461
23-122703-002[186]	2-7/8 "	60050145X	60050145X[37]	60050146	69270702[41]	R4111999[53]	R4122386	R4577461	R4577461
23-122691-002[188]	2-7/8 "	60050145X	60050145X[37]	60050146	69270702[41]	R4111999[53]	R4122386	R4577461	R4577461
N/A	1-1/2 "	R4033607	R4033607	R4166818	NR	-	-	-	-
N/A	1-5/8 "	R4133338	R4133338	R4166689	NR	-	-	-	-

329 - Forward

340 - Use 69160457 for Disc Pad Retainer Clip

341 - Use 69160445 for Disc Pad Retainer Clip

MAKE MODEL YEAR AXLE CODE AXLE WEIGHT	AXLE & BRK. TYPE	BRK. MFG.	BRAKE SIZE	FMSI	MERITOR DISC PAD OR BRAKE SHOE	MERITOR GUIDE PIN OR RETURN SPRING KIT	MERITOR CALIPER HWD. KIT OR RETURN SPRING KIT	MERITOR ADJUSTER KIT (LEFT WHEEL)	MERITOR ADJUSTER KIT (RIGHT WHEEL)
FORD(Cont.)									
F700 SERIES: CONVENTIONAL(Cont.)									
1986									
R185	Ra	WG	15 " x 6 "	4596 - 381	R700381	R40H597	R40H9200	R40H3540	R40H3541
	Ra	WG	15 " x 7 "	4597 - 383	R700383	R40H597	R40H9200	R40H3540	R40H3541
Split System									
F070	Fa	WG	15 " x 3 "	1245C - 321	R700321	R40H521	R40H9237	R40H3502	R40H3503
	Fa	WG	15 " x 3 "	1245C - 321	R700321	R40H521	R40H9237	R40H3502	R40H3503
Split System									
F090, F120	Fa	WG	15 " x 3 "	1245C - 321	R700321	R40H521	R40H9237	R40H3502	R40H3503
	Fa	WG	15 " x 3 "	1245C - 321	R700321	R40H521	R40H9237	R40H3502	R40H3503
1985									
	Fd	DN		7149 - D236	MD236[341]	69310693	R40H5523	NR	NR
	Fd	DN		7149 - D236	MD236[341]	69310693	R40H5523	NR	NR
	Fd	DN		7149 - D236	MD236[341]	69310693	R40H5523	NR	NR
	Fd	DN		7141 - D224	MD224[340]	69310693	60050153	NR	NR
	Ra	LG	15 " x 5 "	4528A - 542	N/A	R40H618	NR	NR	NR
	Ra	LG	15 " x 5 "	4528A - 542	N/A	R40H618	NR	SP7888S	SP7888S
	Ra	LG	15 " x 6 "	4504A - 543	N/A	R40H618	NR	NR	NR
	Ra	LG	15 " x 6 "	4504A - 543	N/A	R40H618	NR	SP7887S	SP7887S
	Ra	LG	15 " x 6 "	4504A - 543	N/A	R40H618	NR	NR	NR
	Ra	LG	15 " x 6 "	4504A - 543	N/A	R40H618	NR	SP7888S	SP7888S
	Ra	LG	15 " x 7 "	4505A - 544	N/A	R40H618	NR	NR	NR
	Ra	LG	15 " x 7 "	4505A - 544	N/A	R40H618	NR	SP7888S	SP7888S
	Ra	LG	15 " x 7 "	4505A - 544	N/A	R40H618	NR	NR	NR
	Ra	LG	15 " x 7 "	4505A - 544	N/A	R40H618	NR	SP7887S	SP7887S
F050, F055, F060	Fa	KH	14 " x 2-1/2 "	2060 - 361	Discontinued	R40H596	R40H9219	R40H3536	R40H3537
F070	Fa	WG	15 " x 3 "	1245C - 321	R700321	R40H521	R40H9237	R40H3502	R40H3503
	Fa	WG	15 " x 3 "	1245C - 321	R700321	R40H521	R40H9237	R40H3502	R40H3503
	Fd	DN		7141 - D224	MD224[340]	69310693	60050153	NR	NR
F080, F090	Fd	DN		7149 - D236	MD236[341]	69310693	R40H5523	NR	NR
	Fd	DN		7149 - D236	MD236[341]	69310693	R40H5523	NR	NR
R170, R175	Ra	KH	15 " x 5 "	4646 - 400	R700400	R40H595	R40H9220	R40H3538	R40H3539
	Ra	WG	15 " x 5 "	1252 - 346	R700346	R40H597	R40H9200	R40H3540	R40H3541
R185	Ra	WG	15 " x 6 "	4596 - 381	R700381	R40H597	R40H9200	R40H3540	R40H3541
	Ra	WG	15 " x 7 "	4597 - 383	R700383	R40H597	R40H9200	R40H3540	R40H3541
Split System									
F070	Fa	WG	15 " x 3 "	1245C - 321	R700321	R40H521	R40H9237	R40H3502	R40H3503
	Fa	WG	15 " x 3 "	1245C - 321	R700321	R40H521	R40H9237	R40H3502	R40H3503
Split System									
F090, F120	Fa	WG	15 " x 3 "	1245C - 321	R700321	R40H521	R40H9237	R40H3502	R40H3503
	Fa	WG	15 " x 3 "	1245C - 321	R700321	R40H521	R40H9237	R40H3502	R40H3503
1984									
	Fd	DN		7141 - D224	MD224[340]	69310693	60050153	NR	NR
	Fd	DN		7149 - D236	MD236[341]	69310693	R40H5523	NR	NR
	Fd	DN		7149 - D236	MD236[341]	69310693	R40H5523	NR	NR
	Fd	DN		7149 - D236	MD236[341]	69310693	R40H5523	NR	NR
	Ra	LG	15 " x 5 "	4528A - 542	N/A	R40H618	NR	NR	NR
	Ra	LG	15 " x 5 "	4528A - 542	N/A	R40H618	NR	SP7888S	SP7888S
	Ra	LG	15 " x 6 "	4504A - 543	N/A	R40H618	NR	SP7887S	SP7887S
	Ra	LG	15 " x 6 "	4504A - 543	N/A	R40H618	NR	SP7888S	SP7888S
	Ra	LG	15 " x 6 "	4504A - 543	N/A	R40H618	NR	NR	NR
	Ra	LG	15 " x 6 "	4504A - 543	N/A	R40H618	NR	NR	NR
	Ra	LG	15 " x 7 "	4505A - 544	N/A	R40H618	NR	SP7887S	SP7887S
	Ra	LG	15 " x 7 "	4505A - 544	N/A	R40H618	NR	NR	NR
	Ra	LG	15 " x 7 "	4505A - 544	N/A	R40H618	NR	SP7888S	SP7888S
	Ra	LG	15 " x 7 "	4505A - 544	N/A	R40H618	NR	NR	NR
F050, F055, F060	Fa	KH	14 " x 2-1/2 "	2060 - 361	Discontinued	R40H596	R40H9219	R40H3536	R40H3537
F070	Fa	WG	15 " x 3 "	1245C - 321	R700321	R40H521	R40H9237	R40H3502	R40H3503
	Fa	WG	15 " x 3 "	1245C - 321	R700321	R40H521	R40H9237	R40H3502	R40H3503
	Fd	DN		7141 - D224	MD224[340]	69310693	60050153	NR	NR
F080, F090	Fd	DN		7149 - D236	MD236[341]	69310693	R40H5523	NR	NR
	Fd	DN		7149 - D236	MD236[341]	69310693	R40H5523	NR	NR
R170, R175	Ra	KH	15 " x 5 "	4646 - 400	R700400	R40H595	R40H9220	R40H3538	R40H3539
	Ra	WG	15 " x 5 "	1252 - 346	R700346	R40H597	R40H9200	R40H3540	R40H3541
R185	Ra	WG	15 " x 6 "	4596 - 381	R700381	R40H597	R40H9200	R40H3540	R40H3541

9 - 6 Stud, Dayton Rotor, Hat Style
53 - Power Brakes
188 - 6 Stud, 9.251" Hub

37 - Also available as a New unit
186 - 10 Stud
204 - Right Hand; use E-4057 for Left Hand Expander Kits

41 - Aluminum piston
187 - 6 Stud, 6.443" Hub
329 - Forward

MERITOR DRUM OR ROTOR NO.	CALIPER OR CYLINDER BORE SIZE	MERITOR CALIPER OR WHEEL CYLINDER (LEFT)	MERITOR CALIPER OR WHEEL CYLINDER (RIGHT)	MERITOR CALIPER OR WHEEL CYLINDER REPAIR KIT	MERITOR CALIPER PISTON	MERITOR MASTER CYLINDER	MERITOR MASTER CYLINDER KIT	MERITOR BRAKE HOSE (LEFT)	MERITOR BRAKE HOSE (RIGHT)
									FORD(Cont.)
									F700 SERIES: CONVENTIONAL(Cont.)
N/A	1-5/8 "	R4133338	R4133338	R4166689	NR	-	-	-	-
N/A	1-3/4 "	R4133400	R4133400	R4166917	NR	-	-	-	-
N/A	1-1/8 "	R4133714	R4133715	R4166926	NR	-	-	-	-
N/A	1-1/8 "	R4133719	R4133718	R4166926	NR	-	-	-	-
N/A	1-1/4 "	R4133720	R4133721	R4166923	NR	-	-	-	-
N/A	1-1/4 "	R4133581	R4133581	R4166923	NR	-	-	-	-
23-122691-002[188]	2-7/8 "	60050145X	60050145X[37]	60050146	69270702[41]	R4111999[53]	R4122386	R4577461	R4577461
23-122703-002[186]	2-7/8 "	60050145X	60050145X[37]	60050146	69270702[41]	R4111999[53]	R4122386	R4577461	R4577461
23-122743-002[187]	2-7/8 "	60050145X	60050145X[37]	60050146	69270702[41]	R4111999[53]	R4122386	R4577461	R4577461
23-122700-002[9]	2-1/2 "	R424244X	R424244X[37]	60050266	69270757[41]	R4111999[53]	R4122386	R4577461	R4577461
N/A	1-5/8 "	201181	201182	SP7895S	NR	-	-	N/A	N/A
N/A	1-5/8 "	201185	201186[329]	SP7895S	NR	-	-	N/A	N/A
N/A	1-5/8 "	201181	201182	SP7895S	NR	-	-	N/A	N/A
N/A	1-3/4 "	201183X	201184X[329]	SP7873S	NR	-	-	N/A	N/A
N/A	1-3/4 "	201179X	201180X	SP7873S	SP7880S[204]	-	-	N/A	N/A
N/A	1-5/8 "	201185	201186[329]	SP7895S	NR	-	-	N/A	N/A
N/A	1-5/8 "	201181	201182	SP7895S	NR	-	-	N/A	N/A
N/A	1-5/8 "	201185	201186[329]	SP7895S	NR	-	-	N/A	N/A
N/A	1-3/4 "	201179X	201180X	SP7873S	SP7880S[204]	-	-	N/A	N/A
N/A	1-3/4 "	201183X	201184X[329]	SP7873S	NR	-	-	N/A	N/A
N/A	1.09375	R4133484	R4133485	R4166819	NR	-	-	-	-
N/A	1-1/8 "	R4133716	R4133717	R4166926	NR	-	-	-	-
N/A	1-1/8 "	R4133714	R4133715	R4166926	NR	-	-	-	-
23-122700-002[9]	2-1/2 "	R424244X	R424244X[37]	60050266	69270757[41]	R4111999[53]	R4122386	R4577461	R4577461
23-122703-002[186]	2-7/8 "	60050145X	60050145X[37]	60050146	69270702[41]	R4111999[53]	R4122386	R4577461	R4577461
23-122691-002[188]	2-7/8 "	60050145X	60050145X[37]	60050146	69270702[41]	R4111999[53]	R4122386	R4577461	R4577461
N/A	1-1/2 "	R4033607	R4033607	R4166818	NR	-	-	-	-
N/A	1-5/8 "	R4133338	R4133338	R4166689	NR	-	-	-	-
N/A	1-5/8 "	R4133338	R4133338	R4166689	NR	-	-	-	-
N/A	1-3/4 "	R4133400	R4133400	R4166917	NR	-	-	-	-
N/A	1-1/8 "	R4133719	R4133718	R4166926	NR	-	-	-	-
N/A	1-1/8 "	R4133714	R4133715	R4166926	NR	-	-	-	-
N/A	1-1/4 "	R4133720	R4133721	R4166923	NR	-	-	-	-
N/A	1-1/4 "	R4133581	R4133581	R4166923	NR	-	-	-	-
23-122700-002[9]	2-1/2 "	R424244X	R424244X[37]	60050266	69270757[41]	R4111999[53]	R4122386	R4577461	R4577461
23-122743-002[187]	2-7/8 "	60050145X	60050145X[37]	60050146	69270702[41]	R4111999[53]	R4122386	R4577461	R4577461
23-122691-002[188]	2-7/8 "	60050145X	60050145X[37]	60050146	69270702[41]	R4111999[53]	R4122386	R4577461	R4577461
23-122703-002[186]	2-7/8 "	60050145X	60050145X[37]	60050146	69270702[41]	R4111999[53]	R4122386	R4577461	R4577461
N/A	1-5/8 "	201181	201182	SP7895S	NR	-	-	N/A	N/A
N/A	1-5/8 "	201185	201186[329]	SP7895S	NR	-	-	N/A	N/A
N/A	1-3/4 "	201183X	201184X[329]	SP7873S	NR	-	-	N/A	N/A
N/A	1-5/8 "	201185	201186[329]	SP7895S	NR	-	-	N/A	N/A
N/A	1-5/8 "	201181	201182	SP7895S	NR	-	-	N/A	N/A
N/A	1-3/4 "	201179X	201180X	SP7873S	SP7880S[204]	-	-	N/A	N/A
N/A	1-3/4 "	201183X	201184X[329]	SP7873S	NR	-	-	N/A	N/A
N/A	1-5/8 "	201181	201182	SP7895S	NR	-	-	N/A	N/A
N/A	1-5/8 "	201185	201186[329]	SP7895S	NR	-	-	N/A	N/A
N/A	1-3/4 "	201179X	201180X	SP7873S	SP7880S[204]	-	-	N/A	N/A
N/A	1.09375	R4133484	R4133485	R4166819	NR	-	-	-	-
N/A	1-1/8 "	R4133714	R4133715	R4166926	NR	-	-	-	-
N/A	1-1/8 "	R4133716	R4133717	R4166926	NR	-	-	-	-
23-122700-002[9]	2-1/2 "	R424244X	R424244X[37]	60050266	69270757[41]	R4111999[53]	R4122386	R4577461	R4577461
23-122691-002[188]	2-7/8 "	60050145X	60050145X[37]	60050146	69270702[41]	R4111999[53]	R4122386	R4577461	R4577461
23-122703-002[186]	2-7/8 "	60050145X	60050145X[37]	60050146	69270702[41]	R4111999[53]	R4122386	R4577461	R4577461
N/A	1-1/2 "	R4033607	R4033607	R4166818	NR	-	-	-	-
N/A	1-5/8 "	R4133338	R4133338	R4166689	NR	-	-	-	-
N/A	1-5/8 "	R4133338	R4133338	R4166689	NR	-	-	-	-

340 - Use 69160457 for Disc Pad Retainer Clip

341 - Use 69160445 for Disc Pad Retainer Clip

MAKE MODEL YEAR AXLE CODE AXLE WEIGHT	AXLE & BRK. TYPE	BRK. MFG.	BRAKE SIZE	FMSI	MERITOR DISC PAD OR BRAKE SHOE	MERITOR GUIDE PIN OR RETURN SPRING KIT	MERITOR CALIPER HWD. KIT OR RETURN SPRING KIT	MERITOR ADJUSTER KIT (LEFT WHEEL)	MERITOR ADJUSTER KIT (RIGHT WHEEL)
FORD(Cont.)									
F700 SERIES: CONVENTIONAL(Cont.)									
1984									
R185	Ra	WG	15 " x 7 "	4597 - 383	R700383	R40H597	R40H9200	R40H3540	R40H3541
Split System									
F070	Fa	WG	15 " x 3 "	1245C - 321	R700321	R40H521	R40H9237	R40H3502	R40H3503
	Fa	WG	15 " x 3 "	1245C - 321	R700321	R40H521	R40H9237	R40H3502	R40H3503
Split System									
F090, F120	Fa	WG	15 " x 3 "	1245C - 321	R700321	R40H521	R40H9237	R40H3502	R40H3503
	Fa	WG	15 " x 3 "	1245C - 321	R700321	R40H521	R40H9237	R40H3502	R40H3503
1983									
	Ra	LG	15 " x 6 "	4504A - 543	N/A	R40H618	NR	NR	NR
	Ra	LG	15 " x 6 "	4504A - 543	N/A	R40H618	NR	SP7888S	SP7888S
	Ra	LG	15 " x 7 "	4505A - 544	N/A	R40H618	NR	NR	NR
	Ra	LG	15 " x 7 "	4505A - 544	N/A	R40H618	NR	SP7888S	SP7888S
F050, F055, F060	Fa	KH	14 " x 2-1/2 "	2060 - 361	Discontinued	R40H596	R40H9219	R40H3536	R40H3537
F070	Fa	WG	15 " x 3 "	1245C - 321	R700321	R40H521	R40H9237	R40H3502	R40H3503
	Fa	WG	15 " x 3 "	1245C - 321	R700321	R40H521	R40H9237	R40H3502	R40H3503
	Fd	DN		7141 - D224	MD224[340]	69310693	60050153	NR	NR
F080, F090	Fd	DN		7149 - D236	MD236[341]	69310693	R40H5523	NR	NR
	Fd	DN		7149 - D236	MD236[341]	69310693	R40H5523	NR	NR
F090, F120	Fa	WG	15 " x 3 "	1245C - 321	R700321	R40H521	R40H9237	R40H3502	R40H3503
	Fa	WG	15 " x 3 "	1245C - 321	R700321	R40H521	R40H9237	R40H3502	R40H3503
R170, R175	Ra	KH	15 " x 5 "	4646 - 400	R700400	R40H595	R40H9220	R40H3538	R40H3539
	Ra	WG	15 " x 5 "	1252 - 346	R700346	R40H597	R40H9200	R40H3540	R40H3541
R185	Ra	WG	15 " x 6 "	4596 - 381	R700381	R40H597	R40H9200	R40H3540	R40H3541
	Ra	WG	15 " x 7 "	4597 - 383	R700383	R40H597	R40H9200	R40H3540	R40H3541
Split System									
F070	Fa	WG	15 " x 3 "	1245C - 321	R700321	R40H521	R40H9237	R40H3502	R40H3503
	Fa	WG	15 " x 3 "	1245C - 321	R700321	R40H521	R40H9237	R40H3502	R40H3503
1982									
	Ra	LG	15 " x 6 "	4504A - 543	N/A	R40H618	NR	NR	NR
	Ra	LG	15 " x 6 "	4504A - 543	N/A	R40H618	NR	SP7888S	SP7888S
	Ra	LG	15 " x 7 "	4505A - 544	N/A	R40H618	NR	SP7888S	SP7888S
	Ra	LG	15 " x 7 "	4505A - 544	N/A	R40H618	NR	NR	NR
F050, F055, F060	Fa	KH	14 " x 2-1/2 "	2060 - 361	Discontinued	R40H596	R40H9219	R40H3536	R40H3537
F070	Fa	WG	15 " x 3 "	1245C - 321	R700321	R40H521	R40H9237	R40H3502	R40H3503
	Fa	WG	15 " x 3 "	1245C - 321	R700321	R40H521	R40H9237	R40H3502	R40H3503
	Fa	WG	15 " x 3 "	1245C - 321	R700321	R40H521	R40H9237	R40H3502	R40H3503
	Fa	WG	15 " x 3 "	1245C - 321	R700321	R40H521	R40H9237	R40H3502	R40H3503
	Fd	DN		7141 - D224	MD224[340]	69310693	60050153	NR	NR
F080, F090	Fd	DN		7149 - D236	MD236[341]	69310693	R40H5523	NR	NR
	Fd	DN		7149 - D236	MD236[341]	69310693	R40H5523	NR	NR
F090, F120	Fa	WG	15 " x 3 "	1245C - 321	R700321	R40H521	R40H9237	R40H3502	R40H3503
	Fa	WG	15 " x 3 "	1245C - 321	R700321	R40H521	R40H9237	R40H3502	R40H3503
R170, R175	Ra	KH	15 " x 5 "	4646 - 400	R700400	R40H595	R40H9220	R40H3538	R40H3539
	Ra	WG	15 " x 5 "	1252 - 346	R700346	R40H597	R40H9200	R40H3540	R40H3541
R185	Ra	WG	15 " x 6 "	4596 - 381	R700381	R40H597	R40H9200	R40H3540	R40H3541
	Ra	WG	15 " x 7 "	4597 - 383	R700383	R40H597	R40H9200	R40H3540	R40H3541
1981									
	Ra	LG	15 " x 6 "	4504A - 543	N/A	R40H618	NR	SP7888S	SP7888S
	Ra	LG	15 " x 6 "	4504A - 543	N/A	R40H618	NR	NR	NR
	Ra	LG	15 " x 7 "	4505A - 544	N/A	R40H618	NR	SP7888S	SP7888S
	Ra	LG	15 " x 7 "	4505A - 544	N/A	R40H618	NR	NR	NR
F050, F055, F060	Fa	KH	14 " x 2-1/2 "	2060 - 361	Discontinued	R40H596	R40H9219	R40H3536	R40H3537
F070	Fa	WG	15 " x 3 "	1245C - 321	R700321	R40H521	R40H9237	R40H3502	R40H3503
	Fa	WG	15 " x 3 "	1245C - 321	R700321	R40H521	R40H9237	R40H3502	R40H3503
	Fa	WG	15 " x 3 "	1245C - 321	R700321	R40H521	R40H9237	R40H3502	R40H3503
	Fa	WG	15 " x 3 "	1245C - 321	R700321	R40H521	R40H9237	R40H3502	R40H3503
	Fd	DN		7141 - D224	MD224[340]	69310693	60050153	NR	NR
F080, F090	Fd	DN		7149 - D236	MD236[341]	69310693	R40H5523	NR	NR
	Fd	DN		7149 - D236	MD236[341]	69310693	R40H5523	NR	NR
F090, F120	Fa	WG	15 " x 3 "	1245C - 321	R700321	R40H521	R40H9237	R40H3502	R40H3503
	Fa	WG	15 " x 3 "	1245C - 321	R700321	R40H521	R40H9237	R40H3502	R40H3503
R170, R175	Ra	KH	15 " x 5 "	4646 - 400	R700400	R40H595	R40H9220	R40H3538	R40H3539
	Ra	WG	15 " x 5 "	1252 - 346	R700346	R40H597	R40H9200	R40H3540	R40H3541

9 - 6 Stud, Dayton Rotor, Hat Style
53 - Power Brakes
214 - Power Brakes, Split System
37 - Also available as a New unit
186 - 10 Stud
219 - Power Brakes, Gasoline Engine with Vacuum Booster
41 - Aluminum piston
188 - 6 Stud, 9.251" Hub
329 - Forward

MERITOR DRUM OR ROTOR NO.	CALIPER OR CYLINDER BORE SIZE	MERITOR CALIPER OR WHEEL CYLINDER (LEFT)	MERITOR CALIPER OR WHEEL CYLINDER (RIGHT)	MERITOR CALIPER OR WHEEL CYLINDER REPAIR KIT	MERITOR CALIPER PISTON	MERITOR MASTER CYLINDER	MERITOR MASTER CYLINDER KIT	MERITOR BRAKE HOSE (LEFT)	MERITOR BRAKE HOSE (RIGHT)
									FORD(Cont.)
									F700 SERIES: CONVENTIONAL(Cont.)
N/A	1-3/4 "	R4133400	R4133400	R4166917	NR	-	-	-	-
N/A	1-1/8 "	R4133719	R4133718	R4166926	NR	-	-	-	-
N/A	1-1/8 "	R4133714	R4133715	R4166926	NR	-	-	-	-
N/A	1-1/4 "	R4133720	R4133721	R4166923	NR	-	-	-	-
N/A	1-1/4 "	R4133581	R4133581	R4166923	NR	-	-	-	-
N/A	1-5/8 "	201181	201182	SP7895S	NR	-	-	R4577147	R4577147
N/A	1-5/8 "	201185	201186[329]	SP7895S	NR	-	-	R4577147	R4577147
N/A	1-5/8 "	201181	201182	SP7895S	NR	-	-	R4577147	R4577147
N/A	1-5/8 "	201185	201186[329]	SP7895S	NR	-	-	R4577147	R4577147
N/A	1.09375	R4133484	R4133485	R4166819	NR	R4111629[53]	R4122484	R4577460	R4577460
N/A	1-1/8 "	R4133714	R4133715	R4166926	NR	R4111911[219]	R4122387	R4577454	R4577455
N/A	1-1/8 "	R4133716	R4133717	R4166926	NR	R4111911[219]	R4122387	R4577454	R4577455
23-122700-002[9]	2-1/2 "	R424244X	R424244X[37]	60050266	69270757[41]	R4111992[214]	R4122386	R4577452	R4577453
23-122703-002[186]	2-7/8 "	60050145X	60050145X[37]	60050146	69270702[41]	R4111992[214]	R4122386	R4577452	R4577453
23-122691-002[188]	2-7/8 "	60050145X	60050145X[37]	60050146	69270702[41]	R4111992[214]	R4122386	R4577452	R4577453
N/A	1-1/4 "	R4133720	R4133721	R4166923	NR	R4111992[214]	R4122386	R4577452	R4577453
N/A	1-1/4 "	R4133581	R4133581	R4166923	NR	R4111992[214]	R4122386	R4577452	R4577453
N/A	1-1/2 "	R4033607	R4033607	R4166818	NR	-	-	R4577147	R4577147
N/A	1-5/8 "	R4133338	R4133338	R4166689	NR	-	-	R4577147	R4577147
N/A	1-5/8 "	R4133338	R4133338	R4166689	NR	-	-	R4577147	R4577147
N/A	1-3/4 "	R4133400	R4133400	R4166917	NR	-	-	R4577147	R4577147
N/A	1-1/8 "	R4133719	R4133718	R4166926	NR	R4111992[214]	R4122386	R4577452	R4577453
N/A	1-1/8 "	R4133714	R4133715	R4166926	NR	R4111992[214]	R4122386	R4577452	R4577453
N/A	1-5/8 "	201181	201182	SP7895S	NR	-	-	R4577147	R4577147
N/A	1-5/8 "	201185	201186[329]	SP7895S	NR	-	-	R4577147	R4577147
N/A	1-5/8 "	201185	201186[329]	SP7895S	NR	-	-	R4577147	R4577147
N/A	1-5/8 "	201181	201182	SP7895S	NR	-	-	R4577147	R4577147
N/A	1.09375	R4133484	R4133485	R4166819	NR	R4111629[53]	R4122484	R4577460	R4577460
N/A	1-1/8 "	R4133714	R4133715	R4166926	NR	R4111911[219]	R4122387	R4577454	R4577455
N/A	1-1/8 "	R4133716	R4133717	R4166926	NR	R4111911[219]	R4122387	R4577454	R4577455
N/A	1-1/8 "	R4133714	R4133715	R4166926	NR	R4111992[214]	R4122386	R4577452	R4577453
N/A	1-1/8 "	R4133719	R4133718	R4166926	NR	R4111992[214]	R4122386	R4577452	R4577453
23-122700-002[9]	2-1/2 "	R424244X	R424244X[37]	60050266	69270757[41]	R4111992[214]	R4122386	R4577452	R4577453
23-122691-002[188]	2-7/8 "	60050145X	60050145X[37]	60050146	69270702[41]	R4111992[214]	R4122386	R4577452	R4577453
23-122703-002[186]	2-7/8 "	60050145X	60050145X[37]	60050146	69270702[41]	R4111992[214]	R4122386	R4577452	R4577453
N/A	1-1/4 "	R4133720	R4133721	R4166923	NR	R4111992[214]	R4122386	R4577452	R4577453
N/A	1-1/4 "	R4133581	R4133581	R4166923	NR	R4111992[214]	R4122386	R4577452	R4577453
N/A	1-1/2 "	R4033607	R4033607	R4166818	NR	-	-	R4577147	R4577147
N/A	1-5/8 "	R4133338	R4133338	R4166689	NR	-	-	R4577147	R4577147
N/A	1-5/8 "	R4133338	R4133338	R4166689	NR	-	-	R4577147	R4577147
N/A	1-3/4 "	R4133400	R4133400	R4166917	NR	-	-	R4577147	R4577147
N/A	1-5/8 "	201185	201186[329]	SP7895S	NR	-	-	R4577147	R4577147
N/A	1-5/8 "	201181	201182	SP7895S	NR	-	-	R4577147	R4577147
N/A	1-5/8 "	201185	201186[329]	SP7895S	NR	-	-	R4577147	R4577147
N/A	1-5/8 "	201181	201182	SP7895S	NR	-	-	R4577147	R4577147
N/A	1.09375	R4133484	R4133485	R4166819	NR	R4111629[53]	R4122484	R4577460	R4577460
N/A	1-1/8 "	R4133714	R4133715	R4166926	NR	R4111992[214]	R4122386	R4577452	R4577453
N/A	1-1/8 "	R4133719	R4133718	R4166926	NR	R4111992[214]	R4122386	R4577452	R4577453
N/A	1-1/8 "	R4133716	R4133717	R4166926	NR	R4111911[219]	R4122387	R4577454	R4577455
N/A	1-1/8 "	R4133714	R4133715	R4166926	NR	R4111911[219]	R4122387	R4577454	R4577455
23-122700-002[9]	2-1/2 "	R424244X	R424244X[37]	60050266	69270757[41]	R4111992[214]	R4122386	R4577452	R4577453
23-122703-002[186]	2-7/8 "	60050145X	60050145X[37]	60050146	69270702[41]	R4111992[214]	R4122386	R4577452	R4577453
23-122691-002[188]	2-7/8 "	60050145X	60050145X[37]	60050146	69270702[41]	R4111992[214]	R4122386	R4577452	R4577453
N/A	1-1/4 "	R4133581	R4133581	R4166923	NR	R4111992[214]	R4122386	R4577452	R4577453
N/A	1-1/4 "	R4133720	R4133721	R4166923	NR	R4111992[214]	R4122386	R4577452	R4577453
N/A	1-1/2 "	R4033607	R4033607	R4166818	NR	-	-	R4577147	R4577147
N/A	1-5/8 "	R4133338	R4133338	R4166689	NR	-	-	R4577147	R4577147

340 - Use 69160457 for Disc Pad Retainer Clip

341 - Use 69160445 for Disc Pad Retainer Clip

MAKE MODEL YEAR AXLE CODE AXLE WEIGHT	AXLE & BRK. TYPE	BRK. MFG.	BRAKE SIZE	FMSI	MERITOR DISC PAD OR BRAKE SHOE	MERITOR GUIDE PIN OR RETURN SPRING KIT	MERITOR CALIPER HWD. KIT OR RETURN SPRING KIT	MERITOR ADJUSTER KIT (LEFT WHEEL)	MERITOR ADJUSTER KIT (RIGHT WHEEL)
FORD(Cont.)									
F700 SERIES: CONVENTIONAL(Cont.)									
1981									
R185	Ra	WG	15 " x 6 "	4596 - 381	R700381	R40H597	R40H9200	R40H3540	R40H3541
	Ra	WG	15 " x 7 "	4597 - 383	R700383	R40H597	R40H9200	R40H3540	R40H3541
1980									
	Ra	LG	15 " x 6 "	4504A - 543	N/A	R40H618	NR	SP7888S	SP7888S
	Ra	LG	15 " x 6 "	4504A - 543	N/A	R40H618	NR	NR	NR
	Ra	LG	15 " x 7 "	4505A - 544	N/A	R40H618	NR	NR	NR
	Ra	LG	15 " x 7 "	4505A - 544	N/A	R40H618	NR	SP7888S	SP7888S
F050, F055, F060	Fa	KH	14 " x 2-1/2 "	2060 - 361	Discontinued	R40H596	R40H9219	R40H3536	R40H3537
F070	Fa	WG	15 " x 3 "	1245C - 321	R700321	R40H521	R40H9237	R40H3502	R40H3503
	Fa	WG	15 " x 3 "	1245C - 321	R700321	R40H521	R40H9237	R40H3502	R40H3503
	Fa	WG	15 " x 3 "	1245C - 321	R700321	R40H521	R40H9237	R40H3502	R40H3503
	Fa	WG	15 " x 3 "	1245C - 321	R700321	R40H521	R40H9237	R40H3502	R40H3503
	Fa	WG	15 " x 3 "	1245C - 321	R700321	R40H521	R40H9237	R40H3502	R40H3503
	Fa	WG	15 " x 3 "	1245C - 321	R700321	R40H521	R40H9237	R40H3502	R40H3503
	Fd	DN		7141 - D224	MD224[340]	69310693	60050153	NR	NR
F080, F090	Fd	DN		7149 - D236	MD236[341]	69310693	R40H5523	NR	NR
	Fd	DN		7149 - D236	MD236[341]	69310693	R40H5523	NR	NR
F090, F120	Fa	WG	15 " x 3 "	1245C - 321	R700321	R40H521	R40H9237	R40H3502	R40H3503
	Fa	WG	15 " x 3 "	1245C - 321	R700321	R40H521	R40H9237	R40H3502	R40H3503
R170, R175	Ra	KH	15 " x 5 "	4646 - 400	R700400	R40H595	R40H9220	R40H3538	R40H3539
	Ra	WG	15 " x 5 "	1252 - 346	R700346	R40H597	R40H9200	R40H3540	R40H3541
R185	Ra	WG	15 " x 6 "	4596 - 381	R700381	R40H597	R40H9200	R40H3540	R40H3541
	Ra	WG	15 " x 7 "	4597 - 383	R700383	R40H597	R40H9200	R40H3540	R40H3541
1979									
F050, F055, F060	Fa	KH	14 " x 2-1/2 "	2060 - 361	Discontinued	R40H596	R40H9219	R40H3536	R40H3537
F070	Fa	WG	15 " x 3 "	1245C - 321	R700321	R40H521	R40H9237	R40H3502	R40H3503
	Fa	WG	15 " x 3 "	1245C - 321	R700321	R40H521	R40H9237	R40H3502	R40H3503
	Fa	WG	15 " x 3 "	1245C - 321	R700321	R40H521	R40H9237	R40H3502	R40H3503
	Fa	WG	15 " x 3 "	1245C - 321	R700321	R40H521	R40H9237	R40H3502	R40H3503
	Fd	DN		7141 - D224	MD224[340]	69310693	60050153	NR	NR
F080, F090	Fd	DN		7149 - D236	MD236[341]	69310693	R40H5523	NR	NR
	Fd	DN		7149 - D236	MD236[341]	69310693	R40H5523	NR	NR
R170, R175	Ra	KH	15 " x 5 "	4646 - 400	R700400	R40H595	R40H9220	R40H3538	R40H3539
	Ra	WG	15 " x 5 "	1252 - 346	R700346	R40H597	R40H9200	R40H3540	R40H3541
R185	Ra	WG	15 " x 6 "	4596 - 381	R700381	R40H597	R40H9200	R40H3540	R40H3541
	Ra	WG	15 " x 7 "	4597 - 383	R700383	R40H597	R40H9200	R40H3540	R40H3541
Split System									
F070	Fa	WG	15 " x 3 "	1245C - 321	R700321	R40H521	R40H9237	R40H3502	R40H3503
	Fa	WG	15 " x 3 "	1245C - 321	R700321	R40H521	R40H9237	R40H3502	R40H3503
Split System									
F090, F120	Fa	WG	15 " x 3 "	1245C - 321	R700321	R40H521	R40H9237	R40H3502	R40H3503
	Fa	WG	15 " x 3 "	1245C - 321	R700321	R40H521	R40H9237	R40H3502	R40H3503
1978									
F050, F055, F060	Fa	KH	14 " x 2-1/2 "	2060 - 361	Discontinued	R40H596	R40H9219	R40H3536	R40H3537
F070	Fa	WG	15 " x 3 "	1245C - 321	R700321	R40H521	R40H9237	R40H3502	R40H3503
	Fa	WG	15 " x 3 "	1245C - 321	R700321	R40H521	R40H9237	R40H3502	R40H3503
	Fa	WG	15 " x 3 "	1245C - 321	R700321	R40H521	R40H9237	R40H3502	R40H3503
	Fa	WG	15 " x 3 "	1245C - 321	R700321	R40H521	R40H9237	R40H3502	R40H3503
	Fd	DN		7141 - D224	MD224[340]	69310693	60050153	NR	NR
F080, F090	Fd	DN		7149 - D236	MD236[341]	69310693	R40H5523	NR	NR
	Fd	DN		7149 - D236	MD236[341]	69310693	R40H5523	NR	NR
R170, R175	Ra	KH	15 " x 5 "	4646 - 400	R700400	R40H595	R40H9220	R40H3538	R40H3539
	Ra	WG	15 " x 5 "	1252 - 346	R700346	R40H597	R40H9200	R40H3540	R40H3541
R185	Ra	WG	15 " x 6 "	4596 - 381	R700381	R40H597	R40H9200	R40H3540	R40H3541
	Ra	WG	15 " x 7 "	4597 - 383	R700383	R40H597	R40H9200	R40H3540	R40H3541
Split System									
F070	Fa	WG	15 " x 3 "	1245C - 321	R700321	R40H521	R40H9237	R40H3502	R40H3503
	Fa	WG	15 " x 3 "	1245C - 321	R700321	R40H521	R40H9237	R40H3502	R40H3503
Split System									
F090, F120	Fa	WG	15 " x 3 "	1245C - 321	R700321	R40H521	R40H9237	R40H3502	R40H3503
	Fa	WG	15 " x 3 "	1245C - 321	R700321	R40H521	R40H9237	R40H3502	R40H3503
1977									
F050, F055, F060	Fa	KH	14 " x 2-1/2 "	2060 - 361	Discontinued	R40H596	R40H9219	R40H3536	R40H3537

9 - 6 Stud, Dayton Rotor, Hat Style

37 - Also available as a New unit

41 - Aluminum piston

53 - Power Brakes

186 - 10 Stud

188 - 6 Stud, 9.251" Hub

214 - Power Brakes, Split System

219 - Power Brakes, Gasoline Engine with Vacuum Booster

329 - Forward

MERITOR DRUM OR ROTOR NO.	CALIPER OR CYLINDER BORE SIZE	MERITOR CALIPER OR WHEEL CYLINDER (LEFT)	MERITOR CALIPER OR WHEEL CYLINDER (RIGHT)	MERITOR CALIPER OR WHEEL CYLINDER REPAIR KIT	MERITOR CALIPER PISTON	MERITOR MASTER CYLINDER	MERITOR MASTER CYLINDER KIT	MERITOR BRAKE HOSE (LEFT)	MERITOR BRAKE HOSE (RIGHT)
									FORD(Cont.)
									F700 SERIES: CONVENTIONAL(Cont.)
N/A	1-5/8 "	R4133338	R4133338	R4166689	NR	-	-	R4577147	R4577147
N/A	1-3/4 "	R4133400	R4133400	R4166917	NR	-	-	R4577147	R4577147
N/A	1-5/8 "	201185	201186[329]	SP7895S	NR	-	-	R4577147	R4577147
N/A	1-5/8 "	201181	201182	SP7895S	NR	-	-	R4577147	R4577147
N/A	1-5/8 "	201181	201182	SP7895S	NR	-	-	R4577147	R4577147
N/A	1-5/8 "	201185	201186[329]	SP7895S	NR	-	-	R4577147	R4577147
N/A	1.09375	R4133484	R4133485	R4166819	NR	R4111629[53]	R4122484	R4577460	R4577460
N/A	1-1/8 "	R4133716	R4133717	R4166926	NR	R4111911[219]	R4122387	R4577454	R4577455
N/A	1-1/8 "	R4133716	R4133717	R4166926	NR	R4111911[219]	R4122387	R4577454	R4577455
N/A	1-1/8 "	R4133714	R4133715	R4166926	NR	R4111911[219]	R4122387	R4577454	R4577455
N/A	1-1/8 "	R4133714	R4133715	R4166926	NR	R4111911[219]	R4122387	R4577454	R4577455
N/A	1-1/8 "	R4133714	R4133715	R4166926	NR	R4111992[214]	R4122386	R4577452	R4577453
N/A	1-1/8 "	R4133719	R4133718	R4166926	NR	R4111992[214]	R4122386	R4577452	R4577453
23-122700-002[9]	2-1/2 "	R424244X	R424244X[37]	60050266	69270757[41]	R4111992[214]	R4122386	R4577452	R4577453
23-122691-002[188]	2-7/8 "	60050145X	60050145X[37]	60050146	69270702[41]	R4111992[214]	R4122386	R4577452	R4577453
23-122703-002[186]	2-7/8 "	60050145X	60050145X[37]	60050146	69270702[41]	R4111992[214]	R4122386	R4577452	R4577453
N/A	1-1/4 "	R4133581	R4133581	R4166923	NR	R4111992[214]	R4122386	R4577452	R4577453
N/A	1-1/4 "	R4133720	R4133721	R4166923	NR	R4111992[214]	R4122386	R4577452	R4577453
N/A	1-1/2 "	R4033607	R4033607	R4166818	NR	-	-	R4577147	R4577147
N/A	1-5/8 "	R4133338	R4133338	R4166689	NR	-	-	R4577147	R4577147
N/A	1-5/8 "	R4133338	R4133338	R4166689	NR	-	-	R4577147	R4577147
N/A	1-3/4 "	R4133400	R4133400	R4166917	NR	-	-	R4577147	R4577147
N/A	1.09375	R4133484	R4133485	R4166819	NR	-	-	-	-
N/A	1-1/8 "	R4133714	R4133715	R4166926	NR	R4111622[356]	N/A	-	-
N/A	1-1/8 "	R4133714	R4133715	R4166926	NR	R4111632[357]	R4122343	-	-
N/A	1-1/8 "	R4133716	R4133717	R4166926	NR	R4111622[356]	N/A	-	-
N/A	1-1/8 "	R4133716	R4133717	R4166926	NR	R4111632[357]	R4122343	-	-
23-122700-002[9]	2-1/2 "	R424244X	R424244X[37]	60050266	69270757[41]	-	-	-	-
23-122703-002[186]	2-7/8 "	60050145X	60050145X[37]	60050146	69270702[41]	-	-	-	-
23-122691-002[188]	2-7/8 "	60050145X	60050145X[37]	60050146	69270702[41]	-	-	-	-
N/A	1-1/2 "	R4033607	R4033607	R4166818	NR	-	-	-	-
N/A	1-5/8 "	R4133338	R4133338	R4166689	NR	-	-	-	-
N/A	1-5/8 "	R4133338	R4133338	R4166689	NR	-	-	-	-
N/A	1-3/4 "	R4133400	R4133400	R4166917	NR	-	-	-	-
N/A	1-1/8 "	R4133719	R4133718	R4166926	NR	-	-	-	-
N/A	1-1/8 "	R4133714	R4133715	R4166926	NR	-	-	-	-
N/A	1-1/4 "	R4133581	R4133581	R4166923	NR	-	-	-	-
N/A	1-1/4 "	R4133720	R4133721	R4166923	NR	-	-	-	-
N/A	1.09375	R4133484	R4133485	R4166819	NR	-	-	-	-
N/A	1-1/8 "	R4133716	R4133717	R4166926	NR	R4111632[357]	R4122343	-	-
N/A	1-1/8 "	R4133714	R4133715	R4166926	NR	R4111632[357]	R4122343	-	-
N/A	1-1/8 "	R4133716	R4133717	R4166926	NR	R4111622[356]	N/A	-	-
N/A	1-1/8 "	R4133714	R4133715	R4166926	NR	R4111622[356]	N/A	-	-
23-122700-002[9]	2-1/2 "	R424244X	R424244X[37]	60050266	69270757[41]	-	-	-	-
23-122703-002[186]	2-7/8 "	60050145X	60050145X[37]	60050146	69270702[41]	-	-	-	-
23-122691-002[188]	2-7/8 "	60050145X	60050145X[37]	60050146	69270702[41]	-	-	-	-
N/A	1-1/2 "	R4033607	R4033607	R4166818	NR	-	-	-	-
N/A	1-5/8 "	R4133338	R4133338	R4166689	NR	-	-	-	-
N/A	1-5/8 "	R4133338	R4133338	R4166689	NR	-	-	-	-
N/A	1-3/4 "	R4133400	R4133400	R4166917	NR	-	-	-	-
N/A	1-1/8 "	R4133719	R4133718	R4166926	NR	-	-	-	-
N/A	1-1/8 "	R4133714	R4133715	R4166926	NR	-	-	-	-
N/A	1-1/4 "	R4133720	R4133721	R4166923	NR	-	-	-	-
N/A	1-1/4 "	R4133581	R4133581	R4166923	NR	-	-	-	-
-	1.09375	R4133484	R4133485	R4166819	NR	-	-	-	-

340 - Use 69160457 for Disc Pad Retainer Clip

341 - Use 69160445 for Disc Pad Retainer Clip

356 - Single Hydraulic System, Bosch Cylinder, after Serial No. Q20000, 18,500lb. Rear Axle

357 - Single Hydraulic System, Bosch Cylinder, after Serial No. Q20001, 18,500lb. Rear Axle

MAKE MODEL YEAR AXLE CODE AXLE WEIGHT	AXLE & BRK. TYPE	BRK. MFG.	BRAKE SIZE	FMSI	MERITOR DISC PAD OR BRAKE SHOE	MERITOR GUIDE PIN OR RETURN SPRING KIT	MERITOR CALIPER HWD. KIT OR RETURN SPRING KIT	MERITOR ADJUSTER KIT (LEFT WHEEL)	MERITOR ADJUSTER KIT (RIGHT WHEEL)
FORD(Cont.)									
F700 SERIES: CONVENTIONAL(Cont.)									
1977									
	Fa	KH	14 " x 2-1/2 "	2060 - 361	Discontinued	R40H596	R40H9219	R40H3536	R40H3537
F070	Fa	WG	15 " x 3 "	1245C - 321	R700321	R40H521	R40H9237	R40H3502	R40H3503
	Fa	WG	15 " x 3 "	1245C - 321	R700321	R40H521	R40H9237	R40H3502	R40H3503
	Fa	WG	15 " x 3 "	1245C - 321	R700321	R40H521	R40H9237	R40H3502	R40H3503
	Fa	WG	15 " x 3 "	1245C - 321	R700321	R40H521	R40H9237	R40H3502	R40H3503
	Fa	WG	15 " x 3 "	1245C - 321	R700321	R40H521	R40H9237	R40H3502	R40H3503
	Fa	WG	15 " x 3 "	1245C - 321	R700321	R40H521	R40H9237	R40H3502	R40H3503
	Fa	WG	15 " x 3 "	1245C - 321	R700321	R40H521	R40H9237	R40H3502	R40H3503
	Fa	WG	15 " x 3 "	1245C - 321	R700321	R40H521	R40H9237	R40H3502	R40H3503
	Fd	DN		7141 - D224	MD224[340]	69310693	60050153	NR	NR
F080, F090	Fd	DN		7149 - D236	MD236[341]	69310693	R40H5523	NR	NR
	Fd	DN		7149 - D236	MD236[341]	69310693	R40H5523	NR	NR
F090, F120	Fa	WG	15 " x 3 "	1245C - 321	R700321	R40H521	R40H9237	R40H3502	R40H3503
	Fa	WG	15 " x 3 "	1245C - 321	R700321	R40H521	R40H9237	R40H3502	R40H3503
	Fa	WG	15 " x 3 "	1245C - 321	R700321	R40H521	R40H9237	R40H3502	R40H3503
	Fa	WG	15 " x 3 "	1245C - 321	R700321	R40H521	R40H9237	R40H3502	R40H3503
R170, R175	Ra	KH	15 " x 5 "	4646 - 400	R700400	R40H595	R40H9220	R40H3538	R40H3539
	Ra	KH	15 " x 5 "	4646 - 400	R700400	R40H595	R40H9220	R40H3538	R40H3539
	Ra	KH	15 " x 5 "	4646 - 400	R700400	R40H595	R40H9220	R40H3538	R40H3539
	Ra	WG	15 " x 5 "	1252 - 346	R700346	R40H597	R40H9200	R40H3540	R40H3541
	Ra	WG	15 " x 5 "	1252 - 346	R700346	R40H597	R40H9200	R40H3540	R40H3541
R185	Ra	WG	15 " x 6 "	4596 - 381	R700381	R40H597	R40H9200	R40H3540	R40H3541
	Ra	WG	15 " x 6 "	4596 - 381	R700381	R40H597	R40H9200	R40H3540	R40H3541
	Ra	WG	15 " x 7 "	4597 - 383	R700383	R40H597	R40H9200	R40H3540	R40H3541
	Ra	WG	15 " x 7 "	4597 - 383	R700383	R40H597	R40H9200	R40H3540	R40H3541
1976									
F050, F055, F060	Fa	KH	14 " x 2-1/2 "	2060 - 361	Discontinued	R40H596	R40H9219	R40H3536	R40H3537
	Fa	KH	14 " x 2-1/2 "	2060 - 361	Discontinued	R40H596	R40H9219	R40H3536	R40H3537
F070	Fa	WG	15 " x 3 "	1245C - 321	R700321	R40H521	R40H9237	R40H3502	R40H3503
	Fa	WG	15 " x 3 "	1245C - 321	R700321	R40H521	R40H9237	R40H3502	R40H3503
	Fa	WG	15 " x 3 "	1245C - 321	R700321	R40H521	R40H9237	R40H3502	R40H3503
	Fa	WG	15 " x 3 "	1245C - 321	R700321	R40H521	R40H9237	R40H3502	R40H3503
	Fd	DN		7141 - D224	MD224[340]	69310693	60050153	NR	NR
F080, F090	Fd	DN		7149 - D236	MD236[341]	69310693	R40H5523	NR	NR
	Fd	DN		7149 - D236	MD236[341]	69310693	R40H5523	NR	NR
R170, R175	Ra	KH	15 " x 5 "	4646 - 400	R700400	R40H595	R40H9220	R40H3538	R40H3539
	Ra	KH	15 " x 5 "	4646 - 400	R700400	R40H595	R40H9220	R40H3538	R40H3539
	Ra	KH	15 " x 5 "	4646 - 400	R700400	R40H595	R40H9220	R40H3538	R40H3539
	Ra	WG	15 " x 5 "	1252 - 346	R700346	R40H597	R40H9200	R40H3540	R40H3541
	Ra	WG	15 " x 5 "	1252 - 346	R700346	R40H597	R40H9200	R40H3540	R40H3541
R185	Ra	WG	15 " x 6 "	4596 - 381	R700381	R40H597	R40H9200	R40H3540	R40H3541
	Ra	WG	15 " x 6 "	4596 - 381	R700381	R40H597	R40H9200	R40H3540	R40H3541
	Ra	WG	15 " x 7 "	4597 - 383	R700383	R40H597	R40H9200	R40H3540	R40H3541
	Ra	WG	15 " x 7 "	4597 - 383	R700383	R40H597	R40H9200	R40H3540	R40H3541
Split System									
F070	Fa	WG	15 " x 3 "	1245C - 321	R700321	R40H521	R40H9237	R40H3502	R40H3503
	Fa	WG	15 " x 3 "	1245C - 321	R700321	R40H521	R40H9237	R40H3502	R40H3503
	Fa	WG	15 " x 3 "	1245C - 321	R700321	R40H521	R40H9237	R40H3502	R40H3503
	Fa	WG	15 " x 3 "	1245C - 321	R700321	R40H521	R40H9237	R40H3502	R40H3503
Split System									
F090, F120	Fa	WG	15 " x 3 "	1245C - 321	R700321	R40H521	R40H9237	R40H3502	R40H3503
	Fa	WG	15 " x 3 "	1245C - 321	R700321	R40H521	R40H9237	R40H3502	R40H3503
	Fa	WG	15 " x 3 "	1245C - 321	R700321	R40H521	R40H9237	R40H3502	R40H3503
	Fa	WG	15 " x 3 "	1245C - 321	R700321	R40H521	R40H9237	R40H3502	R40H3503
1975									
F050, F055, F060	Fa	KH	14 " x 2-1/2 "	2060 - 361	Discontinued	R40H596	R40H9219	R40H3536	R40H3537
	Fa	KH	14 " x 2-1/2 "	2060 - 361	Discontinued	R40H596	R40H9219	R40H3536	R40H3537
F070	Fa	WG	15 " x 3 "	1245C - 321	R700321	R40H521	R40H9237	R40H3502	R40H3503
	Fa	WG	15 " x 3 "	1245C - 321	R700321	R40H521	R40H9237	R40H3502	R40H3503
	Fa	WG	15 " x 3 "	1245C - 321	R700321	R40H521	R40H9237	R40H3502	R40H3503
	Fa	WG	15 " x 3 "	1245C - 321	R700321	R40H521	R40H9237	R40H3502	R40H3503
	Fd	DN		7141 - D224	MD224[340]	69310693	60050153	NR	NR
F080, F090	Fd	DN		7149 - D236	MD236[341]	69310693	R40H5523	NR	NR

9 - 6 Stud, Dayton Rotor, Hat Style
42 - 6 Stud, Dayton Rotor, "U" Style
341 - Use 69160445 for Disc Pad Retainer Clip

37 - Also available as a New unit
186 - 10 Stud
356 - Single Hydraulic System, Bosch Cylinder, after Serial No. Q20000, 18,500lb. Rear Axle

41 - Aluminum piston
340 - Use 69160457 for Disc Pad Retainer Clip
357 - Single Hydraulic System, Bosch Cylinder, after Serial No. Q20001, 18,500lb. Rear Axle

MERITOR DRUM OR ROTOR NO.	CALIPER OR CYLINDER BORE SIZE	MERITOR CALIPER OR WHEEL CYLINDER (LEFT)	MERITOR CALIPER OR WHEEL CYLINDER (RIGHT)	MERITOR CALIPER OR WHEEL CYLINDER REPAIR KIT	MERITOR CALIPER PISTON	MERITOR MASTER CYLINDER	MERITOR MASTER CYLINDER KIT	MERITOR BRAKE HOSE (LEFT)	MERITOR BRAKE HOSE (RIGHT)
									FORD(Cont.)
									F700 SERIES: CONVENTIONAL(Cont.)
-	1.09375	R4133484	R4133485	R4166819	NR	-	-	-	-
-	1-1/8 "	R4133719	R4133718	R4166926	NR	N/A[358]	R4122688	-	-
-	1-1/8 "	R4133714	R4133715	R4166926	NR	N/A[358]	R4122688	-	-
-	1-1/8 "	R4133716	R4133717	R4166926	NR	R4111632[357]	R4122343	-	-
-	1-1/8 "	R4133714	R4133715	R4166926	NR	R4111632[357]	R4122343	-	-
-	1-1/8 "	R4133714	R4133715	R4166926	NR	R4111622[356]	N/A	-	-
-	1-1/8 "	R4133716	R4133717	R4166926	NR	R4111622[356]	N/A	-	-
-	1-1/8 "	R4133714	R4133715	R4166926	NR	N/A[358]	R4122688	-	-
-	1-1/8 "	R4133719	R4133718	R4166926	NR	N/A[358]	R4122688	-	-
23-122700-002[9]	2-1/2 "	R424244X	R424244X[37]	60050266	69270757[41]	-	-	-	-
23-122703-002[186]	2-7/8 "	60050145X	60050145X[37]	60050146	69270702[41]	-	-	-	-
23-122691-002[42]	2-7/8 "	60050145X	60050145X[37]	60050146	69270702[41]	-	-	-	-
-	1-1/4 "	R4133720	R4133721	R4166923	NR	-	-	-	-
-	1-1/4 "	R4133581	R4133581	R4166923	NR	-	-	-	-
-	1-1/4 "	R4133720	R4133721	R4166923	NR	-	-	-	-
-	1-1/4 "	R4133581	R4133582	R4166923	NR	-	-	-	-
-	1-1/2 "	R4033607	R4033607	R4166818	NR	-	-	-	-
-	1-5/8 "	R4133606	R4133606	R415193	NR	-	-	-	-
-	1-1/2 "	R4033607	R4033607	R4166818	NR	-	-	-	-
-	1-5/8 "	R4133338	R4133338	R4166689	NR	-	-	-	-
-	1-5/8 "	R4133338	R4133338	R4166689	NR	-	-	-	-
-	1-5/8 "	R4133338	R4133338	R4166689	NR	-	-	-	-
-	1-5/8 "	R4133338	R4133338	R4166689	NR	-	-	-	-
-	1-3/4 "	R4133400	R4133400	R4166917	NR	-	-	-	-
-	1-3/4 "	R4133400	R4133400	R4166917	NR	-	-	-	-
-	1.09375	R4133484	R4133485	R4166819	NR	-	-	-	-
-	1.09375	R4133484	R4133485	R4166819	NR	-	-	-	-
-	1-1/8 "	R4133714	R4133715	R4166926	NR	R4111632[357]	R4122343	-	-
-	1-1/8 "	R4133716	R4133717	R4166926	NR	R4111622[356]	N/A	-	-
-	1-1/8 "	R4133714	R4133715	R4166926	NR	R4111622[356]	N/A	-	-
-	1-1/8 "	R4133716	R4133717	R4166926	NR	R4111632[357]	R4122343	-	-
23-122700-002[9]	2-1/2 "	R424244X	R424244X[37]	60050266	69270757[41]	-	-	-	-
23-122691-002[42]	2-7/8 "	60050145X	60050145X[37]	60050146	69270702[41]	-	-	-	-
23-122703-002[186]	2-7/8 "	60050145X	60050145X[37]	60050146	69270702[41]	-	-	-	-
-	1-1/2 "	R4033607	R4033607	R4166818	NR	-	-	-	-
-	1-5/8 "	R4133606	R4133606	R415193	NR	-	-	-	-
-	1-1/2 "	R4033607	R4033607	R4166818	NR	-	-	-	-
-	1-5/8 "	R4133338	R4133338	R4166689	NR	-	-	-	-
-	1-5/8 "	R4133338	R4133338	R4166689	NR	-	-	-	-
-	1-5/8 "	R4133338	R4133338	R4166689	NR	-	-	-	-
-	1-5/8 "	R4133338	R4133338	R4166689	NR	-	-	-	-
-	1-3/4 "	R4133400	R4133400	R4166917	NR	-	-	-	-
-	1-3/4 "	R4133400	R4133400	R4166917	NR	-	-	-	-
-	1-1/8 "	R4133714	R4133715	R4166926	NR	N/A[358]	R4122688	-	-
-	1-1/8 "	R4133719	R4133718	R4166926	NR	N/A[358]	R4122688	-	-
-	1-1/8 "	R4133714	R4133715	R4166926	NR	N/A[358]	R4122688	-	-
-	1-1/8 "	R4133719	R4133718	R4166926	NR	N/A[358]	R4122688	-	-
-	1-1/4 "	R4133581	R4133581	R4166923	NR	-	-	-	-
-	1-1/4 "	R4133720	R4133721	R4166923	NR	-	-	-	-
-	1-1/4 "	R4133581	R4133582	R4166923	NR	-	-	-	-
-	1-1/4 "	R4133720	R4133721	R4166923	NR	-	-	-	-
-	1.09375	R4133484	R4133485	R4166819	NR	-	-	-	-
-	1.09375	R4133484	R4133485	R4166819	NR	-	-	-	-
-	1-1/8 "	R4133716	R4133717	R4166926	NR	R4111622[356]	N/A	-	-
-	1-1/8 "	R4133716	R4133717	R4166926	NR	R4111632[357]	R4122343	-	-
-	1-1/8 "	R4133714	R4133715	R4166926	NR	R4111632[357]	R4122343	-	-
-	1-1/8 "	R4133714	R4133715	R4166926	NR	R4111622[356]	N/A	-	-
23-122700-002[9]	2-1/2 "	R424244X	R424244X[37]	60050266	69270757[41]	-	-	-	-
23-122691-002[42]	2-7/8 "	60050145X	60050145X[37]	60050146	69270702[41]	-	-	-	-

358 - Split System

MAKE MODEL YEAR AXLE CODE AXLE WEIGHT	AXLE & BRK. TYPE	BRK. MFG.	BRAKE SIZE	FMSI	MERITOR DISC PAD OR BRAKE SHOE	MERITOR GUIDE PIN OR RETURN SPRING KIT	MERITOR CALIPER HWD. KIT OR RETURN SPRING KIT	MERITOR ADJUSTER KIT (LEFT WHEEL)	MERITOR ADJUSTER KIT (RIGHT WHEEL)
FORD(Cont.)									
F700 SERIES: CONVENTIONAL(Cont.)									
1975									
	Fd	DN		7149 - D236	MD236[341]	69310693	R40H5523	NR	NR
R170, R175	Ra	KH	15 " x 5 "	4646 - 400	R700400	R40H595	R40H9220	R40H3538	R40H3539
	Ra	KH	15 " x 5 "	4646 - 400	R700400	R40H595	R40H9220	R40H3538	R40H3539
	Ra	KH	15 " x 5 "	4646 - 400	R700400	R40H595	R40H9220	R40H3538	R40H3539
	Ra	WG	15 " x 5 "	1252 - 346	R700346	R40H597	R40H9200	R40H3540	R40H3541
	Ra	WG	15 " x 5 "	1252 - 346	R700346	R40H597	R40H9200	R40H3540	R40H3541
R185	Ra	WG	15 " x 6 "	4596 - 381	R700381	R40H597	R40H9200	R40H3540	R40H3541
	Ra	WG	15 " x 6 "	4596 - 381	R700381	R40H597	R40H9200	R40H3540	R40H3541
	Ra	WG	15 " x 7 "	4597 - 383	R700383	R40H597	R40H9200	R40H3540	R40H3541
	Ra	WG	15 " x 7 "	4597 - 383	R700383	R40H597	R40H9200	R40H3540	R40H3541
Split System									
F070	Fa	WG	15 " x 3 "	1245C - 321	R700321	R40H521	R40H9237	R40H3502	R40H3503
	Fa	WG	15 " x 3 "	1245C - 321	R700321	R40H521	R40H9237	R40H3502	R40H3503
	Fa	WG	15 " x 3 "	1245C - 321	R700321	R40H521	R40H9237	R40H3502	R40H3503
	Fa	WG	15 " x 3 "	1245C - 321	R700321	R40H521	R40H9237	R40H3502	R40H3503
Split System									
F090, F120	Fa	WG	15 " x 3 "	1245C - 321	R700321	R40H521	R40H9237	R40H3502	R40H3503
	Fa	WG	15 " x 3 "	1245C - 321	R700321	R40H521	R40H9237	R40H3502	R40H3503
	Fa	WG	15 " x 3 "	1245C - 321	R700321	R40H521	R40H9237	R40H3502	R40H3503
	Fa	WG	15 " x 3 "	1245C - 321	R700321	R40H521	R40H9237	R40H3502	R40H3503
1974									
F050, F055, F060	Fa	KH	14 " x 2-1/2 "	2060 - 361	Discontinued	R40H596	R40H9219	R40H3536	R40H3537
	Fa	KH	14 " x 2-1/2 "	2060 - 361	Discontinued	R40H596	R40H9219	R40H3536	R40H3537
F070	Fa	WG	15 " x 3 "	1245C - 321	R700321	R40H521	R40H9237	R40H3502	R40H3503
	Fa	WG	15 " x 3 "	1245C - 321	R700321	R40H521	R40H9237	R40H3502	R40H3503
	Fa	WG	15 " x 3 "	1245C - 321	R700321	R40H521	R40H9237	R40H3502	R40H3503
	Fa	WG	15 " x 3 "	1245C - 321	R700321	R40H521	R40H9237	R40H3502	R40H3503
	Fd	DN		7141 - D224	MD224[340]	69310693	60050153	NR	NR
F080, F090	Fd	DN		7149 - D236	MD236[341]	69310693	R40H5523	NR	NR
	Fd	DN		7149 - D236	MD236[341]	69310693	R40H5523	NR	NR
R170, R175	Ra	KH	15 " x 5 "	4646 - 400	R700400	R40H595	R40H9220	R40H3538	R40H3539
	Ra	KH	15 " x 5 "	4646 - 400	R700400	R40H595	R40H9220	R40H3538	R40H3539
	Ra	KH	15 " x 5 "	4646 - 400	R700400	R40H595	R40H9220	R40H3538	R40H3539
	Ra	WG	15 " x 5 "	1252 - 346	R700346	R40H597	R40H9200	R40H3540	R40H3541
	Ra	WG	15 " x 5 "	1252 - 346	R700346	R40H597	R40H9200	R40H3540	R40H3541
R185	Ra	WG	15 " x 6 "	4596 - 381	R700381	R40H597	R40H9200	R40H3540	R40H3541
	Ra	WG	15 " x 6 "	4596 - 381	R700381	R40H597	R40H9200	R40H3540	R40H3541
	Ra	WG	15 " x 7 "	4597 - 383	R700383	R40H597	R40H9200	R40H3540	R40H3541
	Ra	WG	15 " x 7 "	4597 - 383	R700383	R40H597	R40H9200	R40H3540	R40H3541
Split System									
F070	Fa	WG	15 " x 3 "	1245C - 321	R700321	R40H521	R40H9237	R40H3502	R40H3503
	Fa	WG	15 " x 3 "	1245C - 321	R700321	R40H521	R40H9237	R40H3502	R40H3503
	Fa	WG	15 " x 3 "	1245C - 321	R700321	R40H521	R40H9237	R40H3502	R40H3503
	Fa	WG	15 " x 3 "	1245C - 321	R700321	R40H521	R40H9237	R40H3502	R40H3503
Split System									
F090, F120	Fa	WG	15 " x 3 "	1245C - 321	R700321	R40H521	R40H9237	R40H3502	R40H3503
	Fa	WG	15 " x 3 "	1245C - 321	R700321	R40H521	R40H9237	R40H3502	R40H3503
	Fa	WG	15 " x 3 "	1245C - 321	R700321	R40H521	R40H9237	R40H3502	R40H3503
	Fa	WG	15 " x 3 "	1245C - 321	R700321	R40H521	R40H9237	R40H3502	R40H3503
1973									
F050, F055, F060	Fa	KH	14 " x 2-1/2 "	2060 - 361	Discontinued	R40H596	R40H9219	R40H3536	R40H3537
	Fa	KH	14 " x 2-1/2 "	2060 - 361	Discontinued	R40H596	R40H9219	R40H3536	R40H3537
F070	Fa	WG	15 " x 3 "	1245C - 321	R700321	R40H521	R40H9237	R40H3502	R40H3503
	Fa	WG	15 " x 3 "	1245C - 321	R700321	R40H521	R40H9237	R40H3502	R40H3503
	Fa	WG	15 " x 3 "	1245C - 321	R700321	R40H521	R40H9237	R40H3502	R40H3503
	Fa	WG	15 " x 3 "	1245C - 321	R700321	R40H521	R40H9237	R40H3502	R40H3503
	Fd	DN		7141 - D224	MD224[340]	69310693	60050153	NR	NR
F080, F090	Fd	DN		7149 - D236	MD236[341]	69310693	R40H5523	NR	NR
	Fd	DN		7149 - D236	MD236[341]	69310693	R40H5523	NR	NR
R170, R175	Ra	KH	15 " x 5 "	4646 - 400	R700400	R40H595	R40H9220	R40H3538	R40H3539
	Ra	KH	15 " x 5 "	4646 - 400	R700400	R40H595	R40H9220	R40H3538	R40H3539
	Ra	KH	15 " x 5 "	4646 - 400	R700400	R40H595	R40H9220	R40H3538	R40H3539
	Ra	WG	15 " x 5 "	1252 - 346	R700346	R40H597	R40H9200	R40H3540	R40H3541

9 - 6 Stud, Dayton Rotor, Hat Style
42 - 6 Stud, Dayton Rotor, "U" Style
341 - Use 69160445 for Disc Pad Retainer Clip
37 - Also available as a New unit
186 - 10 Stud
356 - Single Hydraulic System, Bosch Cylinder, after Serial No. Q20000, 18,500lb. Rear Axle
41 - Aluminum piston
340 - Use 69160457 for Disc Pad Retainer Clip
357 - Single Hydraulic System, Bosch Cylinder, after Serial No. Q20001, 18,500lb. Rear Axle

MERITOR DRUM OR ROTOR NO.	CALIPER OR CYLINDER BORE SIZE	MERITOR CALIPER OR WHEEL CYLINDER (LEFT)	MERITOR CALIPER OR WHEEL CYLINDER (RIGHT)	MERITOR CALIPER OR WHEEL CYLINDER REPAIR KIT	MERITOR CALIPER PISTON	MERITOR MASTER CYLINDER	MERITOR MASTER CYLINDER KIT	MERITOR BRAKE HOSE (LEFT)	MERITOR BRAKE HOSE (RIGHT)
FORD(Cont.)									
F700 SERIES: CONVENTIONAL(Cont.)									
23-122703-002[186]	2-7/8 "	60050145X	60050145X[37]	60050146	69270702[41]	-	-	-	-
-	1-1/2 "	R4033607	R4033607	R4166818	NR	-	-	-	-
-	1-1/2 "	R4033607	R4033607	R4166818	NR	-	-	-	-
-	1-5/8 "	R4133606	R4133606	R415193	NR	-	-	-	-
-	1-5/8 "	R4133338	R4133338	R4166689	NR	-	-	-	-
-	1-5/8 "	R4133338	R4133338	R4166689	NR	-	-	-	-
-	1-5/8 "	R4133338	R4133338	R4166689	NR	-	-	-	-
-	1-5/8 "	R4133338	R4133338	R4166689	NR	-	-	-	-
-	1-3/4 "	R4133400	R4133400	R4166917	NR	-	-	-	-
-	1-3/4 "	R4133400	R4133400	R4166917	NR	-	-	-	-
-	1-1/8 "	R4133714	R4133715	R4166926	NR	N/A[358]	R4122688	-	-
-	1-1/8 "	R4133719	R4133718	R4166926	NR	N/A[358]	R4122688	-	-
-	1-1/8 "	R4133714	R4133715	R4166926	NR	N/A[358]	R4122688	-	-
-	1-1/8 "	R4133719	R4133718	R4166926	NR	N/A[358]	R4122688	-	-
-	1-1/4 "	R4133581	R4133582	R4166923	NR	-	-	-	-
-	1-1/4 "	R4133720	R4133721	R4166923	NR	-	-	-	-
-	1-1/4 "	R4133581	R4133581	R4166923	NR	-	-	-	-
-	1-1/4 "	R4133720	R4133721	R4166923	NR	-	-	-	-
-	1.09375	R4133484	R4133485	R4166819	NR	-	-	-	-
-	1.09375	R4133484	R4133485	R4166819	NR	-	-	-	-
-	1-1/8 "	R4133714	R4133715	R4166926	NR	R4111632[357]	R4122343	-	-
-	1-1/8 "	R4133716	R4133717	R4166926	NR	R4111622[356]	N/A	-	-
-	1-1/8 "	R4133716	R4133717	R4166926	NR	R4111632[357]	R4122343	-	-
-	1-1/8 "	R4133714	R4133715	R4166926	NR	R4111622[356]	N/A	-	-
23-122700-002[9]	2-1/2 "	R424244X	R424244X[37]	60050266	69270757[41]	-	-	-	-
23-122691-002[42]	2-7/8 "	60050145X	60050145X[37]	60050146	69270702[41]	-	-	-	-
23-122703-002[186]	2-7/8 "	60050145X	60050145X[37]	60050146	69270702[41]	-	-	-	-
-	1-1/2 "	R4033607	R4033607	R4166818	NR	-	-	-	-
-	1-5/8 "	R4133606	R4133606	R415193	NR	-	-	-	-
-	1-1/2 "	R4033607	R4033607	R4166818	NR	-	-	-	-
-	1-5/8 "	R4133338	R4133338	R4166689	NR	-	-	-	-
-	1-5/8 "	R4133338	R4133338	R4166689	NR	-	-	-	-
-	1-5/8 "	R4133338	R4133338	R4166689	NR	-	-	-	-
-	1-5/8 "	R4133338	R4133338	R4166689	NR	-	-	-	-
-	1-3/4 "	R4133400	R4133400	R4166917	NR	-	-	-	-
-	1-3/4 "	R4133400	R4133400	R4166917	NR	-	-	-	-
-	1-1/8 "	R4133714	R4133715	R4166926	NR	N/A[358]	R4122688	-	-
-	1-1/8 "	R4133719	R4133718	R4166926	NR	N/A[358]	R4122688	-	-
-	1-1/8 "	R4133719	R4133718	R4166926	NR	N/A[358]	R4122688	-	-
-	1-1/8 "	R4133714	R4133715	R4166926	NR	N/A[358]	R4122688	-	-
-	1-1/4 "	R4133581	R4133582	R4166923	NR	-	-	-	-
-	1-1/4 "	R4133720	R4133721	R4166923	NR	-	-	-	-
-	1-1/4 "	R4133581	R4133581	R4166923	NR	-	-	-	-
-	1-1/4 "	R4133720	R4133721	R4166923	NR	-	-	-	-
-	1.09375	R4133484	R4133485	R4166819	NR	-	-	-	-
-	1.09375	R4133484	R4133485	R4166819	NR	-	-	-	-
-	1-1/8 "	R4133714	R4133715	R4166926	NR	R4111632[357]	R4122343	-	-
-	1-1/8 "	R4133716	R4133717	R4166926	NR	R4111632[357]	R4122343	-	-
-	1-1/8 "	R4133714	R4133715	R4166926	NR	R4111622[356]	N/A	-	-
-	1-1/8 "	R4133716	R4133717	R4166926	NR	R4111622[356]	N/A	-	-
23-122700-002[9]	2-1/2 "	R424244X	R424244X[37]	60050266	69270757[41]	-	-	-	-
23-122703-002[186]	2-7/8 "	60050145X	60050145X[37]	60050146	69270702[41]	-	-	-	-
23-122691-002[42]	2-7/8 "	60050145X	60050145X[37]	60050146	69270702[41]	-	-	-	-
-	1-5/8 "	R4133606	R4133606	R415193	NR	-	-	-	-
-	1-1/2 "	R4033607	R4033607	R4166818	NR	-	-	-	-
-	1-1/2 "	R4033607	R4033607	R4166818	NR	-	-	-	-
-	1-5/8 "	R4133338	R4133338	R4166689	NR	-	-	-	-

358 - Split System

MAKE MODEL YEAR AXLE CODE AXLE WEIGHT	AXLE & BRK. TYPE	BRK. MFG.	BRAKE SIZE	FMSI	MERITOR DISC PAD OR BRAKE SHOE	MERITOR GUIDE PIN OR RETURN SPRING KIT	MERITOR CALIPER HWD. KIT OR RETURN SPRING KIT	MERITOR ADJUSTER KIT (LEFT WHEEL)	MERITOR ADJUSTER KIT (RIGHT WHEEL)
FORD(Cont.)									
F700 SERIES: CONVENTIONAL(Cont.)									
1973									
	Ra	WG	15 " x 5 "	1252 - 346	R700346	R40H597	R40H9200	R40H3540	R40H3541
R185	Ra	WG	15 " x 6 "	4596 - 381	R700381	R40H597	R40H9200	R40H3540	R40H3541
	Ra	WG	15 " x 6 "	4596 - 381	R700381	R40H597	R40H9200	R40H3540	R40H3541
	Ra	WG	15 " x 7 "	4597 - 383	R700383	R40H597	R40H9200	R40H3540	R40H3541
	Ra	WG	15 " x 7 "	4597 - 383	R700383	R40H597	R40H9200	R40H3540	R40H3541
Split System									
F070	Fa	WG	15 " x 3 "	1245C - 321	R700321	R40H521	R40H9237	R40H3502	R40H3503
	Fa	WG	15 " x 3 "	1245C - 321	R700321	R40H521	R40H9237	R40H3502	R40H3503
	Fa	WG	15 " x 3 "	1245C - 321	R700321	R40H521	R40H9237	R40H3502	R40H3503
	Fa	WG	15 " x 3 "	1245C - 321	R700321	R40H521	R40H9237	R40H3502	R40H3503
Split System									
F090, F120	Fa	WG	15 " x 3 "	1245C - 321	R700321	R40H521	R40H9237	R40H3502	R40H3503
	Fa	WG	15 " x 3 "	1245C - 321	R700321	R40H521	R40H9237	R40H3502	R40H3503
	Fa	WG	15 " x 3 "	1245C - 321	R700321	R40H521	R40H9237	R40H3502	R40H3503
	Fa	WG	15 " x 3 "	1245C - 321	R700321	R40H521	R40H9237	R40H3502	R40H3503
1972									
F050, F055, F060	Fa	KH	14 " x 2-1/2 "	2060 - 361	Discontinued	R40H596	R40H9219	R40H3536	R40H3537
	Fa	KH	14 " x 2-1/2 "	2060 - 361	Discontinued	R40H596	R40H9219	R40H3536	R40H3537
F070	Fd	DN		7141 - D224	MD224[340]	69310693	60050153	NR	NR
F080, F090	Fd	DN		7149 - D236	MD236[341]	69310693	R40H5523	NR	NR
	Fd	DN		7149 - D236	MD236[341]	69310693	R40H5523	NR	NR
R170, R175	Ra	KH	15 " x 5 "	4646 - 400	R700400	R40H595	R40H9220	R40H3538	R40H3539
	Ra	KH	15 " x 5 "	4646 - 400	R700400	R40H595	R40H9220	R40H3538	R40H3539
	Ra	KH	15 " x 5 "	4646 - 400	R700400	R40H595	R40H9220	R40H3538	R40H3539
	Ra	WG	15 " x 5 "	1252 - 346	R700346	R40H597	R40H9200	R40H3540	R40H3541
	Ra	WG	15 " x 5 "	1252 - 346	R700346	R40H597	R40H9200	R40H3540	R40H3541
R185	Ra	WG	15 " x 6 "	4596 - 381	R700381	R40H597	R40H9200	R40H3540	R40H3541
	Ra	WG	15 " x 6 "	4596 - 381	R700381	R40H597	R40H9200	R40H3540	R40H3541
	Ra	WG	15 " x 7 "	4597 - 383	R700383	R40H597	R40H9200	R40H3540	R40H3541
	Ra	WG	15 " x 7 "	4597 - 383	R700383	R40H597	R40H9200	R40H3540	R40H3541
Single System									
F070	Fa	WG	15 " x 3 "	1245C - 321	R700321	R40H521	R40H9237	R40H3502	R40H3503
	Fa	WG	15 " x 3 "	1245C - 321	R700321	R40H521	R40H9237	R40H3502	R40H3503
	Fa	WG	15 " x 3 "	1245C - 321	R700321	R40H521	R40H9237	R40H3502	R40H3503
	Fa	WG	15 " x 3 "	1245C - 321	R700321	R40H521	R40H9237	R40H3502	R40H3503
Split System									
F070	Fa	WG	15 " x 3 "	1245C - 321	R700321	R40H521	R40H9237	R40H3502	R40H3503
	Fa	WG	15 " x 3 "	1245C - 321	R700321	R40H521	R40H9237	R40H3502	R40H3503
	Fa	WG	15 " x 3 "	1245C - 321	R700321	R40H521	R40H9237	R40H3502	R40H3503
	Fa	WG	15 " x 3 "	1245C - 321	R700321	R40H521	R40H9237	R40H3502	R40H3503
Split System									
F090, F120	Fa	WG	15 " x 3 "	1245C - 321	R700321	R40H521	R40H9237	R40H3502	R40H3503
	Fa	WG	15 " x 3 "	1245C - 321	R700321	R40H521	R40H9237	R40H3502	R40H3503
	Fa	WG	15 " x 3 "	1245C - 321	R700321	R40H521	R40H9237	R40H3502	R40H3503
	Fa	WG	15 " x 3 "	1245C - 321	R700321	R40H521	R40H9237	R40H3502	R40H3503
1971									
F050, F055, F060	Fa	KH	14 " x 2-1/2 "	2060 - 361	Discontinued	R40H596	R40H9219	R40H3536	R40H3537
	Fa	KH	14 " x 2-1/2 "	2060 - 361	Discontinued	R40H596	R40H9219	R40H3536	R40H3537
F070	Fd	DN		7141 - D224	MD224[340]	69310693	60050153	NR	NR
F080, F090	Fd	DN		7149 - D236	MD236[341]	69310693	R40H5523	NR	NR
	Fd	DN		7149 - D236	MD236[341]	69310693	R40H5523	NR	NR
R170, R175	Ra	KH	15 " x 5 "	4646 - 400	R700400	R40H595	R40H9220	R40H3538	R40H3539
	Ra	KH	15 " x 5 "	4646 - 400	R700400	R40H595	R40H9220	R40H3538	R40H3539
	Ra	KH	15 " x 5 "	4646 - 400	R700400	R40H595	R40H9220	R40H3538	R40H3539
	Ra	WG	15 " x 5 "	1252 - 346	R700346	R40H597	R40H9200	R40H3540	R40H3541
	Ra	WG	15 " x 5 "	1252 - 346	R700346	R40H597	R40H9200	R40H3540	R40H3541
R185	Ra	WG	15 " x 6 "	4596 - 381	R700381	R40H597	R40H9200	R40H3540	R40H3541
	Ra	WG	15 " x 6 "	4596 - 381	R700381	R40H597	R40H9200	R40H3540	R40H3541
	Ra	WG	15 " x 7 "	4597 - 383	R700383	R40H597	R40H9200	R40H3540	R40H3541
	Ra	WG	15 " x 7 "	4597 - 383	R700383	R40H597	R40H9200	R40H3540	R40H3541
Single System									
F070	Fa	WG	15 " x 3 "	1245C - 321	R700321	R40H521	R40H9237	R40H3502	R40H3503
	Fa	WG	15 " x 3 "	1245C - 321	R700321	R40H521	R40H9237	R40H3502	R40H3503

9 - 6 Stud, Dayton Rotor, Hat Style
42 - 6 Stud, Dayton Rotor, "U" Style
341 - Use 69160445 for Disc Pad Retainer Clip
37 - Also available as a New unit
186 - 10 Stud
358 - Split System
41 - Aluminum piston
340 - Use 69160457 for Disc Pad Retainer Clip

MERITOR DRUM OR ROTOR NO.	CALIPER OR CYLINDER BORE SIZE	MERITOR CALIPER OR WHEEL CYLINDER (LEFT)	MERITOR CALIPER OR WHEEL CYLINDER (RIGHT)	MERITOR CALIPER OR WHEEL CYLINDER REPAIR KIT	MERITOR CALIPER PISTON	MERITOR MASTER CYLINDER	MERITOR MASTER CYLINDER KIT	MERITOR BRAKE HOSE (LEFT)	MERITOR BRAKE HOSE (RIGHT)
									FORD(Cont.)
									F700 SERIES: CONVENTIONAL(Cont.)
-	1-5/8 "	R4133338	R4133338	R4166689	NR	-	-	-	-
-	1-5/8 "	R4133338	R4133338	R4166689	NR	-	-	-	-
-	1-5/8 "	R4133338	R4133338	R4166689	NR	-	-	-	-
-	1-3/4 "	R4133400	R4133400	R4166917	NR	-	-	-	-
-	1-3/4 "	R4133400	R4133400	R4166917	NR	-	-	-	-
-	1-1/8 "	R4133714	R4133715	R4166926	NR	N/A[358]	R4122688	-	-
-	1-1/8 "	R4133719	R4133718	R4166926	NR	N/A[358]	R4122688	-	-
-	1-1/8 "	R4133714	R4133715	R4166926	NR	N/A[358]	R4122688	-	-
-	1-1/8 "	R4133719	R4133718	R4166926	NR	N/A[358]	R4122688	-	-
-	1-1/4 "	R4133581	R4133582	R4166923	NR	-	-	-	-
-	1-1/4 "	R4133720	R4133721	R4166923	NR	-	-	-	-
-	1-1/4 "	R4133581	R4133581	R4166923	NR	-	-	-	-
-	1-1/4 "	R4133720	R4133721	R4166923	NR	-	-	-	-
-	1.09375	R4133484	R4133485	R4166819	NR	-	-	-	-
-	1.09375	R4133484	R4133485	R4166819	NR	-	-	-	-
23-122700-002[9]	2-1/2 "	R424244X	R424244X[37]	60050266	69270757[41]	-	-	-	-
23-122691-002[42]	2-7/8 "	60050145X	60050145X[37]	60050146	69270702[41]	-	-	-	-
23-122703-002[186]	2-7/8 "	60050145X	60050145X[37]	60050146	69270702[41]	-	-	-	-
-	1-5/8 "	R4133606	R4133606	R415193	NR	-	-	-	-
-	1-1/2 "	R4033607	R4033607	R4166818	NR	-	-	-	-
-	1-1/2 "	R4033607	R4033607	R4166818	NR	-	-	-	-
-	1-5/8 "	R4133338	R4133338	R4166689	NR	-	-	-	-
-	1-5/8 "	R4133338	R4133338	R4166689	NR	-	-	-	-
-	1-5/8 "	R4133338	R4133338	R4166689	NR	-	-	-	-
-	1-5/8 "	R4133338	R4133338	R4166689	NR	-	-	-	-
-	1-3/4 "	R4133400	R4133400	R4166917	NR	-	-	-	-
-	1-3/4 "	R4133400	R4133400	R4166917	NR	-	-	-	-
-	1-1/8 "	R4133714	R4133715	R4166926	NR	-	-	-	-
-	1-1/8 "	R4133716	R4133717	R4166926	NR	-	-	-	-
-	1-1/8 "	R4133714	R4133715	R4166926	NR	-	-	-	-
-	1-1/8 "	R4133716	R4133717	R4166926	NR	-	-	-	-
-	1-1/8 "	R4133714	R4133715	R4166926	NR	N/A[358]	R4122688	-	-
-	1-1/8 "	R4133719	R4133718	R4166926	NR	N/A[358]	R4122688	-	-
-	1-1/8 "	R4133719	R4133718	R4166926	NR	N/A[358]	R4122688	-	-
-	1-1/8 "	R4133714	R4133715	R4166926	NR	N/A[358]	R4122688	-	-
-	1-1/4 "	R4133720	R4133721	R4166923	NR	-	-	-	-
-	1-1/4 "	R4133581	R4133582	R4166923	NR	-	-	-	-
-	1-1/4 "	R4133720	R4133721	R4166923	NR	-	-	-	-
-	1-1/4 "	R4133581	R4133581	R4166923	NR	-	-	-	-
-	1.09375	R4133484	R4133485	R4166819	NR	-	-	-	-
-	1.09375	R4133484	R4133485	R4166819	NR	-	-	-	-
23-122700-002[9]	2-1/2 "	R424244X	R424244X[37]	60050266	69270757[41]	-	-	-	-
23-122691-002[42]	2-7/8 "	60050145X	60050145X[37]	60050146	69270702[41]	-	-	-	-
23-122703-002[186]	2-7/8 "	60050145X	60050145X[37]	60050146	69270702[41]	-	-	-	-
-	1-1/2 "	R4033607	R4033607	R4166818	NR	-	-	-	-
-	1-5/8 "	R4133606	R4133606	R415193	NR	-	-	-	-
-	1-1/2 "	R4033607	R4033607	R4166818	NR	-	-	-	-
-	1-5/8 "	R4133338	R4133338	R4166689	NR	-	-	-	-
-	1-5/8 "	R4133338	R4133338	R4166689	NR	-	-	-	-
-	1-5/8 "	R4133338	R4133338	R4166689	NR	-	-	-	-
-	1-5/8 "	R4133338	R4133338	R4166689	NR	-	-	-	-
-	1-3/4 "	R4133400	R4133400	R4166917	NR	-	-	-	-
-	1-3/4 "	R4133400	R4133400	R4166917	NR	-	-	-	-
-	1-1/8 "	R4133714	R4133715	R4166926	NR	-	-	-	-
-	1-1/8 "	R4133716	R4133717	R4166926	NR	-	-	-	-

MAKE MODEL YEAR AXLE CODE AXLE WEIGHT	AXLE & BRK. TYPE	BRK. MFG.	BRAKE SIZE	FMSI	MERITOR DISC PAD OR BRAKE SHOE	MERITOR GUIDE PIN OR RETURN SPRING KIT	MERITOR CALIPER HWD. KIT OR RETURN SPRING KIT	MERITOR ADJUSTER KIT (LEFT WHEEL)	MERITOR ADJUSTER KIT (RIGHT WHEEL)
FORD(Cont.)									
F700 SERIES: CONVENTIONAL(Cont.)									
1971									
Single System									
F070	Fa	WG	15 " x 3 "	1245C - 321	R700321	R40H521	R40H9237	R40H3502	R40H3503
	Fa	WG	15 " x 3 "	1245C - 321	R700321	R40H521	R40H9237	R40H3502	R40H3503
Split System									
F070	Fa	WG	15 " x 3 "	1245C - 321	R700321	R40H521	R40H9237	R40H3502	R40H3503
	Fa	WG	15 " x 3 "	1245C - 321	R700321	R40H521	R40H9237	R40H3502	R40H3503
	Fa	WG	15 " x 3 "	1245C - 321	R700321	R40H521	R40H9237	R40H3502	R40H3503
	Fa	WG	15 " x 3 "	1245C - 321	R700321	R40H521	R40H9237	R40H3502	R40H3503
Split System									
F090, F120	Fa	WG	15 " x 3 "	1245C - 321	R700321	R40H521	R40H9237	R40H3502	R40H3503
	Fa	WG	15 " x 3 "	1245C - 321	R700321	R40H521	R40H9237	R40H3502	R40H3503
	Fa	WG	15 " x 3 "	1245C - 321	R700321	R40H521	R40H9237	R40H3502	R40H3503
	Fa	WG	15 " x 3 "	1245C - 321	R700321	R40H521	R40H9237	R40H3502	R40H3503
1970									
F050, F055, F060	Fa	KH	14 " x 2-1/2 "	2060 - 361	Discontinued	R40H596	R40H9219	R40H3536	R40H3537
	Fa	KH	14 " x 2-1/2 "	2060 - 361	Discontinued	R40H596	R40H9219	R40H3536	R40H3537
F070	Fd	DN		7141 - D224	MD224[340]	69310693	60050153	NR	NR
F080, F090	Fd	DN		7149 - D236	MD236[341]	69310693	R40H5523	NR	NR
	Fd	DN		7149 - D236	MD236[341]	69310693	R40H5523	NR	NR
R170, R175	Ra	KH	15 " x 5 "	4646 - 400	R700400	R40H595	R40H9220	R40H3538	R40H3539
	Ra	KH	15 " x 5 "	4646 - 400	R700400	R40H595	R40H9220	R40H3538	R40H3539
	Ra	KH	15 " x 5 "	4646 - 400	R700400	R40H595	R40H9220	R40H3538	R40H3539
	Ra	WG	15 " x 5 "	1252 - 346	R700346	R40H597	R40H9200	R40H3540	R40H3541
	Ra	WG	15 " x 5 "	1252 - 346	R700346	R40H597	R40H9200	R40H3540	R40H3541
R185	Ra	WG	15 " x 6 "	4596 - 381	R700381	R40H597	R40H9200	R40H3540	R40H3541
	Ra	WG	15 " x 6 "	4596 - 381	R700381	R40H597	R40H9200	R40H3540	R40H3541
	Ra	WG	15 " x 7 "	4597 - 383	R700383	R40H597	R40H9200	R40H3540	R40H3541
	Ra	WG	15 " x 7 "	4597 - 383	R700383	R40H597	R40H9200	R40H3540	R40H3541
Single System									
F070	Fa	WG	15 " x 3 "	1245C - 321	R700321	R40H521	R40H9237	R40H3502	R40H3503
	Fa	WG	15 " x 3 "	1245C - 321	R700321	R40H521	R40H9237	R40H3502	R40H3503
	Fa	WG	15 " x 3 "	1245C - 321	R700321	R40H521	R40H9237	R40H3502	R40H3503
	Fa	WG	15 " x 3 "	1245C - 321	R700321	R40H521	R40H9237	R40H3502	R40H3503
Split System									
F070	Fa	WG	15 " x 3 "	1245C - 321	R700321	R40H521	R40H9237	R40H3502	R40H3503
	Fa	WG	15 " x 3 "	1245C - 321	R700321	R40H521	R40H9237	R40H3502	R40H3503
	Fa	WG	15 " x 3 "	1245C - 321	R700321	R40H521	R40H9237	R40H3502	R40H3503
	Fa	WG	15 " x 3 "	1245C - 321	R700321	R40H521	R40H9237	R40H3502	R40H3503
Split System									
F090, F120	Fa	WG	15 " x 3 "	1245C - 321	R700321	R40H521	R40H9237	R40H3502	R40H3503
	Fa	WG	15 " x 3 "	1245C - 321	R700321	R40H521	R40H9237	R40H3502	R40H3503
	Fa	WG	15 " x 3 "	1245C - 321	R700321	R40H521	R40H9237	R40H3502	R40H3503
	Fa	WG	15 " x 3 "	1245C - 321	R700321	R40H521	R40H9237	R40H3502	R40H3503
1969									
F050, F055, F060	Fa	KH	14 " x 2-1/2 "	2060 - 361	Discontinued	R40H596	R40H9219	R40H3536	R40H3537
	Fa	KH	14 " x 2-1/2 "	2060 - 361	Discontinued	R40H596	R40H9219	R40H3536	R40H3537
F070	Fd	DN		7141 - D224	MD224[340]	69310693	60050153	NR	NR
F080, F090	Fd	DN		7149 - D236	MD236[341]	69310693	R40H5523	NR	NR
	Fd	DN		7149 - D236	MD236[341]	69310693	R40H5523	NR	NR
R170, R175	Ra	KH	15 " x 5 "	4646 - 400	R700400	R40H595	R40H9220	R40H3538	R40H3539
	Ra	KH	15 " x 5 "	4646 - 400	R700400	R40H595	R40H9220	R40H3538	R40H3539
	Ra	KH	15 " x 5 "	4646 - 400	R700400	R40H595	R40H9220	R40H3538	R40H3539
	Ra	WG	15 " x 5 "	1252 - 346	R700346	R40H597	R40H9200	R40H3540	R40H3541
	Ra	WG	15 " x 5 "	1252 - 346	R700346	R40H597	R40H9200	R40H3540	R40H3541
R185	Ra	WG	15 " x 6 "	4596 - 381	R700381	R40H597	R40H9200	R40H3540	R40H3541
	Ra	WG	15 " x 6 "	4596 - 381	R700381	R40H597	R40H9200	R40H3540	R40H3541
	Ra	WG	15 " x 7 "	4597 - 383	R700383	R40H597	R40H9200	R40H3540	R40H3541
	Ra	WG	15 " x 7 "	4597 - 383	R700383	R40H597	R40H9200	R40H3540	R40H3541
Single System									
F070	Fa	WG	15 " x 3 "	1245C - 321	R700321	R40H521	R40H9237	R40H3502	R40H3503
	Fa	WG	15 " x 3 "	1245C - 321	R700321	R40H521	R40H9237	R40H3502	R40H3503
	Fa	WG	15 " x 3 "	1245C - 321	R700321	R40H521	R40H9237	R40H3502	R40H3503
	Fa	WG	15 " x 3 "	1245C - 321	R700321	R40H521	R40H9237	R40H3502	R40H3503
Split System									
F070	Fa	WG	15 " x 3 "	1245C - 321	R700321	R40H521	R40H9237	R40H3502	R40H3503

9 - 6 Stud, Dayton Rotor, Hat Style
42 - 6 Stud, Dayton Rotor, "U" Style
341 - Use E-8921 for Disc Pad Retainer Clip
37 - Also available as a New unit
186 - 10 Stud
358 - Split System
41 - Aluminum piston
340 - Use 69160457 for Disc Pad Retainer Clip

MERITOR DRUM OR ROTOR NO.	CALIPER OR CYLINDER BORE SIZE	MERITOR CALIPER OR WHEEL CYLINDER (LEFT)	MERITOR CALIPER OR WHEEL CYLINDER (RIGHT)	MERITOR CALIPER OR WHEEL CYLINDER REPAIR KIT	MERITOR CALIPER PISTON	MERITOR MASTER CYLINDER	MERITOR MASTER CYLINDER KIT	MERITOR BRAKE HOSE (LEFT)	MERITOR BRAKE HOSE (RIGHT)
									FORD(Cont.)
									F700 SERIES: CONVENTIONAL(Cont.)
-	1-1/8 "	R4133714	R4133715	R4166926	NR	-	-	-	-
-	1-1/8 "	R4133716	R4133717	R4166926	NR	-	-	-	-
-	1-1/8 "	R4133714	R4133715	R4166926	NR	N/A[358]	R4122688	-	-
-	1-1/8 "	R4133719	R4133718	R4166926	NR	N/A[358]	R4122688	-	-
-	1-1/8 "	R4133714	R4133715	R4166926	NR	N/A[358]	R4122688	-	-
-	1-1/8 "	R4133719	R4133718	R4166926	NR	N/A[358]	R4122688	-	-
-	1-1/4 "	R4133720	R4133721	R4166923	NR	-	-	-	-
-	1-1/4 "	R4133581	R4133582	R4166923	NR	-	-	-	-
-	1-1/4 "	R4133720	R4133721	R4166923	NR	-	-	-	-
-	1-1/4 "	R4133581	R4133581	R4166923	NR	-	-	-	-
-	1.09375	R4133484	R4133485	R4166819	NR	-	-	-	-
-	1.09375	R4133484	R4133485	R4166819	NR	-	-	-	-
23-122700-002[9]	2-1/2 "	R424244X	R424244X[37]	60050266	69270757[41]	-	-	-	-
23-122691-002[42]	2-7/8 "	60050145X	60050145X[37]	60050146	69270702[41]	-	-	-	-
23-122703-002[186]	2-7/8 "	60050145X	60050145X[37]	60050146	69270702[41]	-	-	-	-
-	1-1/2 "	R4033607	R4033607	R4166818	NR	-	-	-	-
-	1-1/2 "	R4033607	R4033607	R4166818	NR	-	-	-	-
-	1-5/8 "	R4133606	R4133606	R415193	NR	-	-	-	-
-	1-5/8 "	R4133338	R4133338	R4166689	NR	-	-	-	-
-	1-5/8 "	R4133338	R4133338	R4166689	NR	-	-	-	-
-	1-5/8 "	R4133338	R4133338	R4166689	NR	-	-	-	-
-	1-5/8 "	R4133338	R4133338	R4166689	NR	-	-	-	-
-	1-3/4 "	R4133400	R4133400	R4166917	NR	-	-	-	-
-	1-3/4 "	R4133400	R4133400	R4166917	NR	-	-	-	-
-	1-1/8 "	R4133714	R4133715	R4166926	NR	-	-	-	-
-	1-1/8 "	R4133716	R4133717	R4166926	NR	-	-	-	-
-	1-1/8 "	R4133716	R4133717	R4166926	NR	-	-	-	-
-	1-1/8 "	R4133714	R4133715	R4166926	NR	-	-	-	-
-	1-1/8 "	R4133714	R4133715	R4166926	NR	N/A[358]	R4122688	-	-
-	1-1/8 "	R4133719	R4133718	R4166926	NR	N/A[358]	R4122688	-	-
-	1-1/8 "	R4133714	R4133715	R4166926	NR	N/A[358]	R4122688	-	-
-	1-1/8 "	R4133719	R4133718	R4166926	NR	N/A[358]	R4122688	-	-
-	1-1/4 "	R4133581	R4133582	R4166923	NR	-	-	-	-
-	1-1/4 "	R4133720	R4133721	R4166923	NR	-	-	-	-
-	1-1/4 "	R4133581	R4133581	R4166923	NR	-	-	-	-
-	1-1/4 "	R4133720	R4133721	R4166923	NR	-	-	-	-
-	1.09375	R4133484	R4133485	R4166819	NR	-	-	-	-
-	1.09375	R4133484	R4133485	R4166819	NR	-	-	-	-
23-122700-002[9]	2-1/2 "	R424244X	R424244X[37]	60050266	69270757[41]	-	-	-	-
23-122691-002[42]	2-7/8 "	60050145X	60050145X[37]	60050146	69270702[41]	-	-	-	-
23-122703-002[186]	2-7/8 "	60050145X	60050145X[37]	60050146	69270702[41]	-	-	-	-
-	1-1/2 "	R4033607	R4033607	R4166818	NR	-	-	-	-
-	1-5/8 "	R4133606	R4133606	R415193	NR	-	-	-	-
-	1-1/2 "	R4033607	R4033607	R4166818	NR	-	-	-	-
-	1-5/8 "	R4133338	R4133338	R4166689	NR	-	-	-	-
-	1-5/8 "	R4133338	R4133338	R4166689	NR	-	-	-	-
-	1-5/8 "	R4133338	R4133338	R4166689	NR	-	-	-	-
-	1-5/8 "	R4133338	R4133338	R4166689	NR	-	-	-	-
-	1-3/4 "	R4133400	R4133400	R4166917	NR	-	-	-	-
-	1-3/4 "	R4133400	R4133400	R4166917	NR	-	-	-	-
-	1-1/8 "	R4133714	R4133715	R4166926	NR	-	-	-	-
-	1-1/8 "	R4133716	R4133717	R4166926	NR	-	-	-	-
-	1-1/8 "	R4133714	R4133715	R4166926	NR	-	-	-	-
-	1-1/8 "	R4133716	R4133717	R4166926	NR	-	-	-	-
-	1-1/8 "	R4133714	R4133715	R4166926	NR	N/A[358]	R4122688	-	-

MAKE MODEL YEAR AXLE CODE AXLE WEIGHT	AXLE & BRK. TYPE	BRK. MFG.	BRAKE SIZE	FMSI	MERITOR DISC PAD OR BRAKE SHOE	MERITOR GUIDE PIN OR RETURN SPRING KIT	MERITOR CALIPER HWD. KIT OR RETURN SPRING KIT	MERITOR ADJUSTER KIT (LEFT WHEEL)	MERITOR ADJUSTER KIT (RIGHT WHEEL)
FORD(Cont.)									
F700 SERIES: CONVENTIONAL(Cont.)									
1969									
	Fa	WG	15 " x 3 "	1245C - 321	R700321	R40H521	R40H9237	R40H3502	R40H3503
	Fa	WG	15 " x 3 "	1245C - 321	R700321	R40H521	R40H9237	R40H3502	R40H3503
	Fa	WG	15 " x 3 "	1245C - 321	R700321	R40H521	R40H9237	R40H3502	R40H3503
Split System									
F090, F120	Fa	WG	15 " x 3 "	1245C - 321	R700321	R40H521	R40H9237	R40H3502	R40H3503
	Fa	WG	15 " x 3 "	1245C - 321	R700321	R40H521	R40H9237	R40H3502	R40H3503
	Fa	WG	15 " x 3 "	1245C - 321	R700321	R40H521	R40H9237	R40H3502	R40H3503
	Fa	WG	15 " x 3 "	1245C - 321	R700321	R40H521	R40H9237	R40H3502	R40H3503
1968									
F050, F055, F060	Fa	KH	14 " x 2-1/2 "	2060 - 361	Discontinued	R40H596	R40H9219	R40H3536	R40H3537
	Fa	KH	14 " x 2-1/2 "	2060 - 361	Discontinued	R40H596	R40H9219	R40H3536	R40H3537
F070	Fd	DN		7141 - D224	MD224[340]	69310693	60050153	NR	NR
F080, F090	Fd	DN		7149 - D236	MD236[341]	69310693	R40H5523	NR	NR
	Fd	DN		7149 - D236	MD236[341]	69310693	R40H5523	NR	NR
R170, R175	Ra	KH	15 " x 5 "	4646 - 400	R700400	R40H595	R40H9220	R40H3538	R40H3539
	Ra	KH	15 " x 5 "	4646 - 400	R700400	R40H595	R40H9220	R40H3538	R40H3539
	Ra	KH	15 " x 5 "	4646 - 400	R700400	R40H595	R40H9220	R40H3538	R40H3539
	Ra	WG	15 " x 5 "	1252 - 346	R700346	R40H597	R40H9200	R40H3540	R40H3541
	Ra	WG	15 " x 5 "	1252 - 346	R700346	R40H597	R40H9200	R40H3540	R40H3541
R185	Ra	WG	15 " x 6 "	4596 - 381	R700381	R40H597	R40H9200	R40H3540	R40H3541
	Ra	WG	15 " x 6 "	4596 - 381	R700381	R40H597	R40H9200	R40H3540	R40H3541
	Ra	WG	15 " x 7 "	4597 - 383	R700383	R40H597	R40H9200	R40H3540	R40H3541
	Ra	WG	15 " x 7 "	4597 - 383	R700383	R40H597	R40H9200	R40H3540	R40H3541
Single System									
F070	Fa	WG	15 " x 3 "	1245C - 321	R700321	R40H521	R40H9237	R40H3502	R40H3503
	Fa	WG	15 " x 3 "	1245C - 321	R700321	R40H521	R40H9237	R40H3502	R40H3503
	Fa	WG	15 " x 3 "	1245C - 321	R700321	R40H521	R40H9237	R40H3502	R40H3503
	Fa	WG	15 " x 3 "	1245C - 321	R700321	R40H521	R40H9237	R40H3502	R40H3503
Split System									
F070	Fa	WG	15 " x 3 "	1245C - 321	R700321	R40H521	R40H9237	R40H3502	R40H3503
	Fa	WG	15 " x 3 "	1245C - 321	R700321	R40H521	R40H9237	R40H3502	R40H3503
	Fa	WG	15 " x 3 "	1245C - 321	R700321	R40H521	R40H9237	R40H3502	R40H3503
	Fa	WG	15 " x 3 "	1245C - 321	R700321	R40H521	R40H9237	R40H3502	R40H3503
Split System									
F090, F120	Fa	WG	15 " x 3 "	1245C - 321	R700321	R40H521	R40H9237	R40H3502	R40H3503
	Fa	WG	15 " x 3 "	1245C - 321	R700321	R40H521	R40H9237	R40H3502	R40H3503
	Fa	WG	15 " x 3 "	1245C - 321	R700321	R40H521	R40H9237	R40H3502	R40H3503
	Fa	WG	15 " x 3 "	1245C - 321	R700321	R40H521	R40H9237	R40H3502	R40H3503
F750 SERIES: CONVENTIONAL									
2007									
	Fd	Bosch		7655 - D786	MD786	N/R	R4011754	N/R	N/R
	Fd	Bosch		7655 - D786	MD786	N/R	R4011754	N/R	N/R
	Fd	Bosch		7654 - D786	MD786A	N/R	R4011754	N/R	N/R
	Fd	Bosch		7654 - D786	MD786A	N/R	R4011754	N/R	N/R
	Rd	Bosch		7654 - D786	MD786A	N/R	R4011754	N/R	N/R
	Rd	Bosch		7655 - D786	MD786	N/R	R4011754	N/R	N/R
	Rd	Bosch		7655 - D786	MD786	N/R	R4011754	N/R	N/R
	Rd	Bosch		7654 - D786	MD786A	N/R	R4011754	N/R	N/R
2006									
	Fd	Bosch		7654 - D786	MD786A	N/R	R4011754	N/R	N/R
	Fd	Bosch		7655 - D786	MD786	N/R	R4011754	N/R	N/R
	Fd	Bosch		7654 - D786	MD786A	N/R	R4011754	N/R	N/R
	Fd	Bosch		7655 - D786	MD786	N/R	R4011754	N/R	N/R
	Rd	Bosch		7655 - D786	MD786	N/R	R4011754	N/R	N/R
	Rd	Bosch		7654 - D786	MD786A	N/R	R4011754	N/R	N/R
	Rd	Bosch		7655 - D786	MD786	N/R	R4011754	N/R	N/R
	Rd	Bosch		7654 - D786	MD786A	N/R	R4011754	N/R	N/R
2005									
	Fd	Bosch		7654 - D786	MD786A	N/R	R4011754	N/R	N/R
	Fd	Bosch		7655 - D786	MD786	N/R	R4011754	N/R	N/R
	Fd	Bosch		7655 - D786	MD786	N/R	R4011754	N/R	N/R
	Fd	Bosch		7654 - D786	MD786A	N/R	R4011754	N/R	N/R
	Rd	Bosch		7655 - D786	MD786	N/R	R4011754	N/R	N/R

9 - 6 Stud, Dayton Rotor, Hat Style
37 - Also available as a New unit
41 - Aluminum piston
42 - 6 Stud, Dayton Rotor, "U" Style
186 - 10 Stud
340 - Use 69160457 for Disc Pad Retainer Clip
341 - Use E-8921 for Disc Pad Retainer Clip
358 - Split System
387 - 10 Hole Rotor

MERITOR DRUM OR ROTOR NO.	CALIPER OR CYLINDER BORE SIZE	MERITOR CALIPER OR WHEEL CYLINDER (LEFT)	MERITOR CALIPER OR WHEEL CYLINDER (RIGHT)	MERITOR CALIPER OR WHEEL CYLINDER REPAIR KIT	MERITOR CALIPER PISTON	MERITOR MASTER CYLINDER	MERITOR MASTER CYLINDER KIT	MERITOR BRAKE HOSE (LEFT)	MERITOR BRAKE HOSE (RIGHT)
									FORD(Cont.)
									F700 SERIES: CONVENTIONAL(Cont.)
-	1-1/8 "	R4133719	R4133718	R4166926	NR	N/A[358]	R4122688	-	-
-	1-1/8 "	R4133719	R4133718	R4166926	NR	N/A[358]	R4122688	-	-
-	1-1/8 "	R4133714	R4133715	R4166926	NR	N/A[358]	R4122688	-	-
-	1-1/4 "	R4133581	R4133582	R4166923	NR	-	-	-	-
-	1-1/4 "	R4133720	R4133721	R4166923	NR	-	-	-	-
-	1-1/4 "	R4133581	R4133581	R4166923	NR	-	-	-	-
-	1-1/4 "	R4133720	R4133721	R4166923	NR	-	-	-	-
-	1.09375	R4133484	R4133485	R4166819	NR	-	-	-	-
-	1.09375	R4133484	R4133485	R4166819	NR	-	-	-	-
23-122700-002[9]	2-1/2 "	R424244X	R424244X[37]	60050266	69270757[41]	-	-	-	-
23-122703-002[186]	2-7/8 "	60050145X	60050145X[37]	60050146	69270702[41]	-	-	-	-
23-122691-002[42]	2-7/8 "	60050145X	60050145X[37]	60050146	69270702[41]	-	-	-	-
-	1-1/2 "	R4033607	R4033607	R4166818	NR	-	-	-	-
-	1-5/8 "	R4133606	R4133606	R415193	NR	-	-	-	-
-	1-1/2 "	R4033607	R4033607	R4166818	NR	-	-	-	-
-	1-5/8 "	R4133338	R4133338	R4166689	NR	-	-	-	-
-	1-5/8 "	R4133338	R4133338	R4166689	NR	-	-	-	-
-	1-5/8 "	R4133338	R4133338	R4166689	NR	-	-	-	-
-	1-5/8 "	R4133338	R4133338	R4166689	NR	-	-	-	-
-	1-3/4 "	R4133400	R4133400	R4166917	NR	-	-	-	-
-	1-3/4 "	R4133400	R4133400	R4166917	NR	-	-	-	-
-	1-1/8 "	R4133716	R4133717	R4166926	NR	-	-	-	-
-	1-1/8 "	R4133714	R4133715	R4166926	NR	-	-	-	-
-	1-1/8 "	R4133716	R4133717	R4166926	NR	-	-	-	-
-	1-1/8 "	R4133714	R4133715	R4166926	NR	-	-	-	-
-	1-1/8 "	R4133714	R4133715	R4166926	NR	N/A[358]	R4122688	-	-
-	1-1/8 "	R4133719	R4133718	R4166926	NR	N/A[358]	R4122688	-	-
-	1-1/8 "	R4133714	R4133715	R4166926	NR	N/A[358]	R4122688	-	-
-	1-1/8 "	R4133719	R4133718	R4166926	NR	N/A[358]	R4122688	-	-
-	1-1/4 "	R4133581	R4133581	R4166923	NR	-	-	-	-
-	1-1/4 "	R4133581	R4133582	R4166923	NR	-	-	-	-
-	1-1/4 "	R4133720	R4133721	R4166923	NR	-	-	-	-
-	1-1/4 "	R4133720	R4133721	R4166923	NR	-	-	-	-
									F750 SERIES: CONVENTIONAL
R44141476[388]	73mm	R4255850	R4255850	R4011758	R4011757	-	-	-	-
23-123552-004[387]	73mm	R4255850	R4255850	R4011758	R4011757	-	-	-	-
23-123552-004[387]	66mm	R4255849	R4255849	R4011752	R4011751	-	-	-	-
R44141476[388]	66mm	R4255849	R4255849	R4011752	R4011751	-	-	-	-
23-123552-004[387]	66mm	R4255849	R4255849	R4011752	R4011751	-	-	-	-
23-123550-004[387]	73mm	R4255850	R4255850	R4011758	R4011757	-	-	-	-
23-123552-004[387]	73mm	R4255850	R4255850	R4011758	R4011757	-	-	-	-
23-123550-004[387]	66mm	R4255849	R4255849	R4011752	R4011751	-	-	-	-
R44141476[388]	66mm	R4255849	R4255849	R4011752	R4011751	-	-	-	-
R44141476[388]	73mm	R4255850	R4255850	R4011758	R4011757	-	-	-	-
23-123552-004[387]	66mm	R4255849	R4255849	R4011752	R4011751	-	-	-	-
23-123552-004[387]	73mm	R4255850	R4255850	R4011758	R4011757	-	-	-	-
23-123552-004[387]	73mm	R4255850	R4255850	R4011758	R4011757	-	-	-	-
23-123552-004[387]	66mm	R4255849	R4255849	R4011752	R4011751	-	-	-	-
23-123550-004[387]	73mm	R4255850	R4255850	R4011758	R4011757	-	-	-	-
23-123550-004[387]	66mm	R4255849	R4255849	R4011752	R4011751	-	-	-	-
23-123552-004[387]	66mm	R4255849	R4255849	R4011752	R4011751	-	-	-	-
R44141476[388]	73mm	R4255850	R4255850	R4011758	R4011757	-	-	-	-
23-123552-004[387]	73mm	R4255850	R4255850	R4011758	R4011757	-	-	-	-
R44141476[388]	66mm	R4255849	R4255849	R4011752	R4011751	-	-	-	-
23-123552-004[387]	73mm	R4255850	R4255850	R4011758	R4011757	-	-	-	-

388 - 5 Hole Rotor

MAKE MODEL YEAR AXLE CODE AXLE WEIGHT	AXLE & BRK. TYPE	BRK. MFG.	BRAKE SIZE	FMSI	MERITOR DISC PAD OR BRAKE SHOE	MERITOR GUIDE PIN OR RETURN SPRING KIT	MERITOR CALIPER HWD. KIT OR RETURN SPRING KIT	MERITOR ADJUSTER KIT (LEFT WHEEL)	MERITOR ADJUSTER KIT (RIGHT WHEEL)
FORD(Cont.)									
F750 SERIES: CONVENTIONAL(Cont.)									
2005									
	Rd	Bosch		7654 - D786	MD786A	N/R	R4011754	N/R	N/R
	Rd	Bosch		7655 - D786	MD786	N/R	R4011754	N/R	N/R
	Rd	Bosch		7654 - D786	MD786A	N/R	R4011754	N/R	N/R
2004									
	Fd	Bosch		7655 - D786	MD786	N/R	R4011754	N/R	N/R
	Fd	Bosch		7655 - D786	MD786	N/R	R4011754	N/R	N/R
	Fd	Bosch		7654 - D786	MD786A	N/R	R4011754	N/R	N/R
	Fd	Bosch		7654 - D786	MD786A	N/R	R4011754	N/R	N/R
	Rd	Bosch		7654 - D786	MD786A	N/R	R4011754	N/R	N/R
	Rd	Bosch		7654 - D786	MD786A	N/R	R4011754	N/R	N/R
	Rd	Bosch		7655 - D786	MD786	N/R	R4011754	N/R	N/R
	Rd	Bosch		7655 - D786	MD786	N/R	R4011754	N/R	N/R
2003									
	Fd	Meritor		7636 - D769	MD769	N/R	R4011729	N/R	N/R
	Rd	Meritor		7141 - D224	MD224	60050153	69160457	N/R	N/R
21,000, 23,000 lb Axle	Rd	Meritor		7636 - D769	MD769	N/R	R4011729	N/R	N/R
17,5000, 19,000 lb Axle	Rd	Meritor		7636 - D769	MD769	N/R	R4011729	N/R	N/R
2002									
	Fd	Meritor		7636 - D769	MD769	N/R	R4011729	N/R	N/R
	Rd	Meritor		7141 - D224	MD224	60050153	69160457	N/R	N/R
21,000, 23,000 lb Axle	Rd	Meritor		7636 - D769	MD769	N/R	R4011729	N/R	N/R
17,5000, 19,000 lb Axle	Rd	Meritor		7636 - D769	MD769	N/R	R4011729	N/R	N/R
2001									
	Fd	Meritor		7636 - D769	MD769	N/R	R4011729	N/R	N/R
	Rd	Meritor		7141 - D224	MD224	60050153	69160457	N/R	N/R
21,000, 23,000 lb Axle	Rd	Meritor		7636 - D769	MD769	N/R	R4011729	N/R	N/R
17,5000, 19,000 lb Axle	Rd	Meritor		7636 - D769	MD769	N/R	R4011729	N/R	N/R
2000									
	Fd	Meritor		7636 - D769	MD769	N/R	R4011729	N/R	N/R
	Rd	Meritor		7141 - D224	MD224	60050153	69160457	N/R	N/R
21,000, 23,000 lb Axle	Rd	Meritor		7636 - D769	MD769	N/R	R4011729	N/R	N/R
17,5000, 19,000 lb Axle	Rd	Meritor		7636 - D769	MD769	N/R	R4011729	N/R	N/R
F800 SERIES: CONVENTIONAL									
1995									
	Fd	DN		7149 - D236	MD236[341]	69310693	69310782	NR	NR
	Fd	DN		7149 - D236	MD236[341]	69310693	69310782	NR	NR
	Fd	DN		7141 - D224	MD224[340]	69310693	60050153	NR	NR
	Fd	DN		7149 - D236	MD236[341]	69310693	69310782	NR	NR
	Ra	LG	15 " x 5 "	4528A - 542	N/A	R40H618	NR	SP7888S	SP7888S
	Ra	LG	15 " x 5 "	4528A - 542	N/A	R40H618	NR	NR	NR
	Ra	LG	15 " x 6 "	4504A - 543	N/A	R40H618	NR	SP7887S	SP7887S
	Ra	LG	15 " x 6 "	4504A - 543	N/A	R40H618	NR	NR	NR
	Ra	LG	15 " x 7 "	4505A - 544	N/A	R40H618	NR	SP7887S	SP7887S
	Ra	LG	15 " x 7 "	4505A - 544	N/A	R40H618	NR	NR	NR
1994									
	Fd	DN		7141 - D224	MD224[340]	69310693	60050153	NR	NR
	Fd	DN		7149 - D236	MD236[341]	69310693	69310782	NR	NR
	Fd	DN		7149 - D236	MD236[341]	69310693	69310782	NR	NR
	Fd	DN		7149 - D236	MD236[341]	69310693	69310782	NR	NR
	Ra	LG	15 " x 5 "	4528A - 542	N/A	R40H618	NR	SP7888S	SP7888S
	Ra	LG	15 " x 5 "	4528A - 542	N/A	R40H618	NR	NR	NR
	Ra	LG	15 " x 6 "	4504A - 543	N/A	R40H618	NR	NR	NR
	Ra	LG	15 " x 6 "	4504A - 543	N/A	R40H618	NR	SP7887S	SP7887S
	Ra	LG	15 " x 7 "	4505A - 544	N/A	R40H618	NR	SP7887S	SP7887S
	Ra	LG	15 " x 7 "	4505A - 544	N/A	R40H618	NR	NR	NR
1993									
	Fd	DN		7149 - D236	MD236[341]	69310693	69310782	NR	NR
	Fd	DN		7149 - D236	MD236[341]	69310693	69310782	NR	NR
	Fd	DN		7141 - D224	MD224[340]	69310693	60050153	NR	NR
	Fd	DN		7149 - D236	MD236[341]	69310693	69310782	NR	NR
	Ra	LG	15 " x 5 "	4528A - 542	N/A	R40H618	NR	SP7888S	SP7888S
	Ra	LG	15 " x 5 "	4528A - 542	N/A	R40H618	NR	NR	NR
	Ra	LG	15 " x 6 "	4504A - 543	N/A	R40H618	NR	SP7887S	SP7887S

9 - 6 Stud, Dayton Rotor, Hat Style
186 - 10 Stud
204 - Right Hand; use E-4057 for Left Hand Expander Kits
37 - Also available as a New unit
187 - 6 Stud, 6.443" Hub
266 - 10 Stud, Hat Shaped
41 - Aluminum piston
188 - 6 Stud, 9.251" Hub
329 - Forward

MERITOR DRUM OR ROTOR NO.	CALIPER OR CYLINDER BORE SIZE	MERITOR CALIPER OR WHEEL CYLINDER (LEFT)	MERITOR CALIPER OR WHEEL CYLINDER (RIGHT)	MERITOR CALIPER OR WHEEL CYLINDER REPAIR KIT	MERITOR CALIPER PISTON	MERITOR MASTER CYLINDER	MERITOR MASTER CYLINDER KIT	MERITOR BRAKE HOSE (LEFT)	MERITOR BRAKE HOSE (RIGHT)
									FORD(Cont.)
									F750 SERIES: CONVENTIONAL(Cont.)
23-123550-004[387]	66mm	R4255849	R4255849	R4011752	R4011751	-	-	-	-
23-123550-004[387]	73mm	R4255850	R4255850	R4011758	R4011757	-	-	-	-
23-123552-004[387]	66mm	R4255849	R4255849	R4011752	R4011751	-	-	-	-
R44141476[388]	73mm	R4255850	R4255850	R4011758	R4011757	R413013761	-	-	-
23-123552-004[387]	73mm	R4255850	R4255850	R4011758	R4011757	R413013761	-	-	-
R44141476[388]	66mm	R4255849	R4255849	R4011752	R4011751	R413013761	-	-	-
23-123552-004[387]	66mm	R4255849	R4255849	R4011752	R4011751	R413013761	-	-	-
23-123550-004[387]	66mm	R4255849	R4255849	R4011752	R4011751	R413013761	-	-	-
23-123552-004[387]	66mm	R4255849	R4255849	R4011752	R4011751	R413013761	-	-	-
23-123550-004[387]	73mm	R4255850	R4255850	R4011758	R4011757	R413013761	-	-	-
23-123552-004[387]	73mm	R4255850	R4255850	R4011758	R4011757	R413013761	-	-	-
23-123498-002[266]	70mm	60450469002	60450468002[365]	R4011730	60050334	R413013761	-	-	-
23-123528-002	2.50"	60050150	60050150	60050266	69270757	R413013761	-	-	-
23-123461-002	70mm	60450469002	60450468002[365]	R4011730	60050334	R413013761	-	-	-
23-123489-002[387]	64mm	60450474001	60450473001[365]	R4011731	R4011511	R413013761	-	-	-
23-123498-002[266]	70mm	60450469002	60450468002[365]	R4011730	60050334	R413013761	-	-	-
23-123528-002	2.50"	60050150	60050150	60050266	69270757	R413013761	-	-	-
23-123461-002	70mm	60450469002	60450468002[365]	R4011730	60050334	R413013761	-	-	-
23-123489-002[387]	64mm	60450474001	60450473001[365]	R4011731	R4011511	R413013761	-	-	-
23-123498-002[266]	70mm	60450469002	60450468002[365]	R4011730	60050334	R413013761	-	-	-
23-123528-002	2.50"	60050150	60050150	60050266	69270757	R413013761	-	-	-
23-123461-002	70mm	60450469002	60450468002[365]	R4011730	60050334	R413013761	-	-	-
23-123489-002[387]	64mm	60450474001	60450473001[365]	R4011731	R4011511	R413013761	-	-	-
23-123498-002[266]	70mm	60450469002	60450468002[365]	R4011730	60050334	R413013761	-	-	-
23-123528-002	2.50"	60050150	60050150	60050266	69270757	R413013761	-	-	-
23-123461-002	70mm	60450469002	60450468002[365]	R4011730	60050334	R413013761	-	-	-
23-123489-002[387]	64mm	60450474001	60450473001[365]	R4011731	R4011511	R413013761	-	-	-
									F800 SERIES: CONVENTIONAL
23-122703-002[186]	2-7/8 "	60050145X	60050145X[37]	60050146	69270702[41]	-	-	R4577461	R4577461
23-122691-002[188]	2-7/8 "	60050145X	60050145X[37]	60050146	69270702[41]	-	-	R4577461	R4577461
23-122700-002[9]	2-1/2 "	R424244X	R424244X[37]	60050266	69270757[41]	-	-	R4577461	R4577461
23-122743-002[187]	2-7/8 "	60050145X	60050145X[37]	60050146	69270702[41]	-	-	R4577461	R4577461
N/A	1-5/8 "	201185	201186[329]	SP7895S	NR	-	-	R4577870	R4577870
N/A	1-5/8 "	201181	201182	SP7895S	NR	-	-	R4577870	R4577870
N/A	1-3/4 "	201183X	201184X[329]	SP7873S	NR	-	-	R4577870	R4577870
N/A	1-3/4 "	201179X	201180X	SP7873S	SP7880S[204]	-	-	R4577870	R4577870
N/A	1-3/4 "	201183X	201184X[329]	SP7873S	NR	-	-	R4577870	R4577870
N/A	1-3/4 "	201179X	201180X	SP7873S	SP7880S[204]	-	-	R4577870	R4577870
23-122700-002[9]	2-1/2 "	R424244X	R424244X[37]	60050266	69270757[41]	-	-	R4577461	R4577461
23-122743-002[187]	2-7/8 "	60050145X	60050145X[37]	60050146	69270702[41]	-	-	R4577461	R4577461
23-122691-002[188]	2-7/8 "	60050145X	60050145X[37]	60050146	69270702[41]	-	-	R4577461	R4577461
23-122703-002[186]	2-7/8 "	60050145X	60050145X[37]	60050146	69270702[41]	-	-	R4577461	R4577461
N/A	1-5/8 "	201185	201186[329]	SP7895S	NR	-	-	R4577870	R4577870
N/A	1-5/8 "	201181	201182	SP7895S	NR	-	-	R4577870	R4577870
N/A	1-3/4 "	201179X	201180X	SP7873S	SP7880S[204]	-	-	R4577870	R4577870
N/A	1-3/4 "	201183X	201184X[329]	SP7873S	NR	-	-	R4577870	R4577870
N/A	1-3/4 "	201183X	201184X[329]	SP7873S	NR	-	-	R4577870	R4577870
N/A	1-3/4 "	201179X	201180X	SP7873S	SP7880S[204]	-	-	R4577870	R4577870
23-122703-002[186]	2-7/8 "	60050145X	60050145X[37]	60050146	69270702[41]	-	-	R4577461	R4577461
23-122743-002[187]	2-7/8 "	60050145X	60050145X[37]	60050146	69270702[41]	-	-	R4577461	R4577461
23-122700-002[9]	2-1/2 "	R424244X	R424244X[37]	60050266	69270757[41]	-	-	R4577461	R4577461
23-122691-002[188]	2-7/8 "	60050145X	60050145X[37]	60050146	69270702[41]	-	-	R4577461	R4577461
N/A	1-5/8 "	201185	201186[329]	SP7895S	NR	-	-	R4577870	R4577870
N/A	1-5/8 "	201181	201182	SP7895S	NR	-	-	R4577870	R4577870
N/A	1-3/4 "	201183X	201184X[329]	SP7873S	NR	-	-	R4577870	R4577870

340 - Use 69160457 for Disc Pad Retainer Clip
341 - Use E-8921 for Disc Pad Retainer Clip
365 - Caliper Loaded with Hardware and Disc Pads
387 - 10 Hole Rotor
388 - 5 Hole Rotor

MAKE MODEL YEAR AXLE CODE AXLE WEIGHT	AXLE & BRK. TYPE	BRK. MFG.	BRAKE SIZE	FMSI	MERITOR DISC PAD OR BRAKE SHOE	MERITOR GUIDE PIN OR RETURN SPRING KIT	MERITOR CALIPER HWD. KIT OR RETURN SPRING KIT	MERITOR ADJUSTER KIT (LEFT WHEEL)	MERITOR ADJUSTER KIT (RIGHT WHEEL)
FORD(Cont.)									
F800 SERIES: CONVENTIONAL(Cont.)									
1993									
	Ra	LG	15 " x 6 "	4504A - 543	N/A	R40H618	NR	NR	NR
	Ra	LG	15 " x 7 "	4505A - 544	N/A	R40H618	NR	SP7887S	SP7887S
	Ra	LG	15 " x 7 "	4505A - 544	N/A	R40H618	NR	NR	NR
1992									
	Fd	DN		7149 - D236	MD236[341]	69310693	69310782	NR	NR
	Fd	DN		7149 - D236	MD236[341]	69310693	69310782	NR	NR
	Fd	DN		7149 - D236	MD236[341]	69310693	69310782	NR	NR
	Fd	DN		7141 - D224	MD224[340]	69310693	60050153	NR	NR
	Ra	LG	15 " x 5 "	4528A - 542	N/A	R40H618	NR	NR	NR
	Ra	LG	15 " x 5 "	4528A - 542	N/A	R40H618	NR	SP7888S	SP7888S
	Ra	LG	15 " x 6 "	4504A - 543	N/A	R40H618	NR	SP7887S	SP7887S
	Ra	LG	15 " x 6 "	4504A - 543	N/A	R40H618	NR	NR	NR
	Ra	LG	15 " x 7 "	4505A - 544	N/A	R40H618	NR	NR	NR
	Ra	LG	15 " x 7 "	4505A - 544	N/A	R40H618	NR	SP7887S	SP7887S
1991									
	Fd	DN		7141 - D224	MD224[340]	69310693	60050153	NR	NR
	Fd	DN		7149 - D236	MD236[341]	69310693	69310782	NR	NR
	Fd	DN		7149 - D236	MD236[341]	69310693	69310782	NR	NR
	Fd	DN		7149 - D236	MD236[341]	69310693	69310782	NR	NR
	Ra	LG	15 " x 5 "	4528A - 542	N/A	R40H618	NR	SP7888S	SP7888S
	Ra	LG	15 " x 5 "	4528A - 542	N/A	R40H618	NR	NR	NR
	Ra	LG	15 " x 6 "	4504A - 543	N/A	R40H618	NR	NR	NR
	Ra	LG	15 " x 6 "	4504A - 543	N/A	R40H618	NR	SP7887S	SP7887S
	Ra	LG	15 " x 7 "	4505A - 544	N/A	R40H618	NR	SP7887S	SP7887S
	Ra	LG	15 " x 7 "	4505A - 544	N/A	R40H618	NR	NR	NR
1990									
	Fd	DN		7149 - D236	MD236[341]	69310693	69310782	NR	NR
	Fd	DN		7141 - D224	MD224[340]	69310693	60050153	NR	NR
	Fd	DN		7149 - D236	MD236[341]	69310693	69310782	NR	NR
	Fd	DN		7149 - D236	MD236[341]	69310693	69310782	NR	NR
	Ra	LG	15 " x 5 "	4528A - 542	N/A	R40H618	NR	NR	NR
	Ra	LG	15 " x 5 "	4528A - 542	N/A	R40H618	NR	SP7888S	SP7888S
	Ra	LG	15 " x 6 "	4504A - 543	N/A	R40H618	NR	NR	NR
	Ra	LG	15 " x 6 "	4504A - 543	N/A	R40H618	NR	SP7887S	SP7887S
	Ra	LG	15 " x 7 "	4505A - 544	N/A	R40H618	NR	NR	NR
	Ra	LG	15 " x 7 "	4505A - 544	N/A	R40H618	NR	SP7887S	SP7887S
1989									
	Fd	DN		7149 - D236	MD236[341]	69310693	69310782[43]	NR	NR
	Fd	DN		7149 - D236	MD236[341]	69310693	69310782[43]	NR	NR
	Fd	DN		7141 - D224	MD224[340]	69310693	60050153	NR	NR
	Fd	DN		7149 - D236	MD236[341]	69310693	69310782[43]	NR	NR
	Ra	LG	15 " x 5 "	4528A - 542	N/A	R40H618	NR	SP7888S	SP7888S
	Ra	LG	15 " x 5 "	4528A - 542	N/A	R40H618	NR	NR	NR
	Ra	LG	15 " x 6 "	4504A - 543	N/A	R40H618	NR	SP7887S	SP7887S
	Ra	LG	15 " x 6 "	4504A - 543	N/A	R40H618	NR	NR	NR
	Ra	LG	15 " x 7 "	4505A - 544	N/A	R40H618	NR	NR	NR
	Ra	LG	15 " x 7 "	4505A - 544	N/A	R40H618	NR	SP7887S	SP7887S
1988									
	Fd	DN		7141 - D224	MD224[340]	69310693	60050153	NR	NR
	Fd	DN		7149 - D236	MD236[341]	69310693	69310782[43]	NR	NR
	Fd	DN		7149 - D236	MD236[341]	69310693	69310782[43]	NR	NR
	Fd	DN		7149 - D236	MD236[341]	69310693	69310782[43]	NR	NR
	Ra	LG	15 " x 5 "	4528A - 542	N/A	R40H618	NR	SP7888S	SP7888S
	Ra	LG	15 " x 5 "	4528A - 542	N/A	R40H618	NR	NR	NR
	Ra	LG	15 " x 6 "	4504A - 543	N/A	R40H618	NR	NR	NR
	Ra	LG	15 " x 6 "	4504A - 543	N/A	R40H618	NR	SP7887S	SP7887S
	Ra	LG	15 " x 7 "	4505A - 544	N/A	R40H618	NR	NR	NR
	Ra	LG	15 " x 7 "	4505A - 544	N/A	R40H618	NR	SP7887S	SP7887S
1987									
	Fd	DN		7149 - D236	MD236[341]	69310693	69310782[43]	NR	NR
	Fd	DN		7141 - D224	MD224[340]	69310693	60050153	NR	NR
	Fd	DN		7149 - D236	MD236[341]	69310693	69310782[43]	NR	NR
	Fd	DN		7149 - D236	MD236[341]	69310693	69310782[43]	NR	NR
	Ra	LG	15 " x 5 "	4528A - 542	N/A	R40H618	NR	SP7888S	SP7888S

9 - 6 Stud, Dayton Rotor, Hat Style
43 - For Applications Taking A Longer Shim, Use E-9870
187 - 6 Stud, 6.443" Hub
37 - Also available as a New unit
53 - Power Brakes
188 - 6 Stud, 9.251" Hub
41 - Aluminum piston
186 - 10 Stud
204 - Right Hand; use E-4057 for Left Hand Expander Kits

MERITOR DRUM OR ROTOR NO.	CALIPER OR CYLINDER BORE SIZE	MERITOR CALIPER OR WHEEL CYLINDER (LEFT)	MERITOR CALIPER OR WHEEL CYLINDER (RIGHT)	MERITOR CALIPER OR WHEEL CYLINDER REPAIR KIT	MERITOR CALIPER PISTON	MERITOR MASTER CYLINDER	MERITOR MASTER CYLINDER KIT	MERITOR BRAKE HOSE (LEFT)	MERITOR BRAKE HOSE (RIGHT)
									FORD(Cont.)
									F800 SERIES: CONVENTIONAL(Cont.)
N/A	1-3/4 "	201179X	201180X	SP7873S	SP7880S[204]	-	-	R4577870	R4577870
N/A	1-3/4 "	201183X	201184X[329]	SP7873S	NR	-	-	R4577870	R4577870
N/A	1-3/4 "	201179X	201180X	SP7873S	SP7880S[204]	-	-	R4577870	R4577870
23-122691-002[188]	2-7/8 "	60050145X	60050145X[37]	60050146	69270702[41]	-	-	R4577461	R4577461
23-122703-002[186]	2-7/8 "	60050145X	60050145X[37]	60050146	69270702[41]	-	-	R4577461	R4577461
23-122743-002[187]	2-7/8 "	60050145X	60050145X[37]	60050146	69270702[41]	-	-	R4577461	R4577461
23-122700-002[9]	2-1/2 "	R424244X	R424244X[37]	60050266	69270757[41]	-	-	R4577461	R4577461
N/A	1-5/8 "	201181	201182	SP7895S	NR	-	-	R4577870	R4577870
N/A	1-5/8 "	201185	201186[329]	SP7895S	NR	-	-	R4577870	R4577870
N/A	1-3/4 "	201183X	201184X[329]	SP7873S	NR	-	-	R4577870	R4577870
N/A	1-3/4 "	201179X	201180X	SP7873S	SP7880S[204]	-	-	R4577870	R4577870
N/A	1-3/4 "	201179X	201180X	SP7873S	SP7880S[204]	-	-	R4577870	R4577870
N/A	1-3/4 "	201183X	201184X[329]	SP7873S	NR	-	-	R4577870	R4577870
23-122700-002[9]	2-1/2 "	R424244X	R424244X[37]	60050266	69270757[41]	-	-	R4577461	R4577461
23-122691-002[188]	2-7/8 "	60050145X	60050145X[37]	60050146	69270702[41]	-	-	R4577461	R4577461
23-122743-002[187]	2-7/8 "	60050145X	60050145X[37]	60050146	69270702[41]	-	-	R4577461	R4577461
23-122703-002[186]	2-7/8 "	60050145X	60050145X[37]	60050146	69270702[41]	-	-	R4577461	R4577461
N/A	1-5/8 "	201185	201186[329]	SP7895S	NR	-	-	R4577870	R4577870
N/A	1-5/8 "	201181	201182	SP7895S	NR	-	-	R4577870	R4577870
N/A	1-3/4 "	201179X	201180X	SP7873S	SP7880S[204]	-	-	R4577870	R4577870
N/A	1-3/4 "	201183X	201184X[329]	SP7873S	NR	-	-	R4577870	R4577870
N/A	1-3/4 "	201183X	201184X[329]	SP7873S	NR	-	-	R4577870	R4577870
N/A	1-3/4 "	201179X	201180X	SP7873S	SP7880S[204]	-	-	R4577870	R4577870
23-122691-002[188]	2-7/8 "	60050145X	60050145X[37]	60050146	69270702[41]	R4111999[53]	R4122386	R4577461	R4577461
23-122700-002[9]	2-1/2 "	R424244X	R424244X[37]	60050266	69270757[41]	R4111999[53]	R4122386	R4577461	R4577461
23-122703-002[186]	2-7/8 "	60050145X	60050145X[37]	60050146	69270702[41]	R4111999[53]	R4122386	R4577461	R4577461
23-122743-002[187]	2-7/8 "	60050145X	60050145X[37]	60050146	69270702[41]	R4111999[53]	R4122386	R4577461	R4577461
N/A	1-5/8 "	201181	201182	SP7895S	NR	-	-	R4577870	R4577870
N/A	1-5/8 "	201185	201186[329]	SP7895S	NR	-	-	R4577870	R4577870
N/A	1-3/4 "	201179X	201180X	SP7873S	SP7880S[204]	-	-	R4577870	R4577870
N/A	1-3/4 "	201183X	201184X[329]	SP7873S	NR	-	-	R4577870	R4577870
N/A	1-3/4 "	201179X	201180X	SP7873S	SP7880S[204]	-	-	R4577870	R4577870
N/A	1-3/4 "	201183X	201184X[329]	SP7873S	NR	-	-	R4577870	R4577870
23-122743-002[187]	2-7/8 "	60050145X	60050145X[37]	60050146	69270702[41]	R4111999[53]	R4122386	R4577461	R4577461
23-122703-002[186]	2-7/8 "	60050145X	60050145X[37]	60050146	69270702[41]	R4111999[53]	R4122386	R4577461	R4577461
23-122700-002[9]	2-1/2 "	R424244X	R424244X[37]	60050266	69270757[41]	R4111999[53]	R4122386	R4577461	R4577461
23-122691-002[188]	2-7/8 "	60050145X	60050145X[37]	60050146	69270702[41]	R4111999[53]	R4122386	R4577461	R4577461
N/A	1-5/8 "	201185	201186[329]	SP7895S	NR	-	-	N/A	N/A
N/A	1-5/8 "	201181	201182	SP7895S	NR	-	-	N/A	N/A
N/A	1-3/4 "	201183X	201184X[329]	SP7873S	NR	-	-	N/A	N/A
N/A	1-3/4 "	201179X	201180X	SP7873S	SP7880S[204]	-	-	N/A	N/A
N/A	1-3/4 "	201179X	201180X	SP7873S	SP7880S[204]	-	-	N/A	N/A
N/A	1-3/4 "	201183X	201184X[329]	SP7873S	NR	-	-	N/A	N/A
23-122700-002[9]	2-1/2 "	R424244X	R424244X[37]	60050266	69270757[41]	R4111999[53]	R4122386	R4577461	R4577461
23-122743-002[187]	2-7/8 "	60050145X	60050145X[37]	60050146	69270702[41]	R4111999[53]	R4122386	R4577461	R4577461
23-122691-002[188]	2-7/8 "	60050145X	60050145X[37]	60050146	69270702[41]	R4111999[53]	R4122386	R4577461	R4577461
23-122703-002[186]	2-7/8 "	60050145X	60050145X[37]	60050146	69270702[41]	R4111999[53]	R4122386	R4577461	R4577461
N/A	1-5/8 "	201185	201186[329]	SP7895S	NR	-	-	N/A	N/A
N/A	1-5/8 "	201181	201182	SP7895S	NR	-	-	N/A	N/A
N/A	1-3/4 "	201179X	201180X	SP7873S	SP7880S[204]	-	-	N/A	N/A
N/A	1-3/4 "	201183X	201184X[329]	SP7873S	NR	-	-	N/A	N/A
N/A	1-3/4 "	201179X	201180X	SP7873S	SP7880S[204]	-	-	N/A	N/A
N/A	1-3/4 "	201183X	201184X[329]	SP7873S	NR	-	-	N/A	N/A
23-122691-002[188]	2-7/8 "	60050145X	60050145X[37]	60050146	69270702[41]	R4111999[53]	R4122386	R4577461	R4577461
23-122700-002[9]	2-1/2 "	R424244X	R424244X[37]	60050266	69270757[41]	R4111999[53]	R4122386	R4577461	R4577461
23-122743-002[187]	2-7/8 "	60050145X	60050145X[37]	60050146	69270702[41]	R4111999[53]	R4122386	R4577461	R4577461
23-122703-002[186]	2-7/8 "	60050145X	60050145X[37]	60050146	69270702[41]	R4111999[53]	R4122386	R4577461	R4577461
N/A	1-5/8 "	201185	201186[329]	SP7895S	NR	-	-	N/A	N/A

329 - Forward

340 - Use 69160457 for Disc Pad Retainer Clip

341 - Use E-8921 for Disc Pad Retainer Clip

MAKE MODEL YEAR AXLE CODE AXLE WEIGHT	AXLE & BRK. TYPE	BRK. MFG.	BRAKE SIZE	FMSI	MERITOR DISC PAD OR BRAKE SHOE	MERITOR GUIDE PIN OR RETURN SPRING KIT	MERITOR CALIPER HWD. KIT OR RETURN SPRING KIT	MERITOR ADJUSTER KIT (LEFT WHEEL)	MERITOR ADJUSTER KIT (RIGHT WHEEL)
FORD(Cont.)									
F800 SERIES: CONVENTIONAL(Cont.)									
1987									
	Ra	LG	15 " x 5 "	4528A - 542	N/A	R40H618	NR	NR	NR
	Ra	LG	15 " x 6 "	4504A - 543	N/A	R40H618	NR	NR	NR
	Ra	LG	15 " x 6 "	4504A - 543	N/A	R40H618	NR	SP7887S	SP7887S
	Ra	LG	15 " x 7 "	4505A - 544	N/A	R40H618	NR	NR	NR
	Ra	LG	15 " x 7 "	4505A - 544	N/A	R40H618	NR	SP7887S	SP7887S
1986									
	Fd	DN		7149 - D236	MD236[341]	69310693	69310782	NR	NR
	Fd	DN		7149 - D236	MD236[341]	69310693	69310782	NR	NR
	Fd	DN		7149 - D236	MD236[341]	69310693	69310782	NR	NR
	Fd	DN		7141 - D224	MD224[340]	69310693	60050153	NR	NR
	Ra	LG	15 " x 5 "	4528A - 542	N/A	R40H618	NR	NR	NR
	Ra	LG	15 " x 5 "	4528A - 542	N/A	R40H618	NR	SP7888S	SP7888S
	Ra	LG	15 " x 6 "	4504A - 543	N/A	R40H618	NR	SP7887S	SP7887S
	Ra	LG	15 " x 6 "	4504A - 543	N/A	R40H618	NR	NR	NR
	Ra	LG	15 " x 6 "	4504A - 543	N/A	R40H618	NR	NR	NR
	Ra	LG	15 " x 6 "	4504A - 543	N/A	R40H618	NR	SP7887S	SP7887S
	Ra	LG	15 " x 7 "	4505A - 544	N/A	R40H618	NR	SP7887S	SP7887S
	Ra	LG	15 " x 7 "	4505A - 544	N/A	R40H618	NR	NR	NR
	Ra	LG	15 " x 7 "	4505A - 544	N/A	R40H618	NR	NR	NR
	Ra	LG	15 " x 7 "	4505A - 544	N/A	R40H618	NR	SP7887S	SP7887S
F050, F055, F060	Fa	KH	14 " x 2-1/2 "	2060 - 361	Discontinued	R40H596	R40H9219	R40H3536	R40H3537
F070	Fa	WG	15 " x 3 "	1245C - 321	R700321	R40H521	R40H9237	R40H3502	R40H3503
	Fa	WG	15 " x 3 "	1245C - 321	R700321	R40H521	R40H9237	R40H3502	R40H3503
	Fd	DN		7141 - D224	MD224[340]	69310693	60050153	NR	NR
F080, F090	Fd	DN		7149 - D236	MD236[341]	69310693	69310782	NR	NR
	Fd	DN		7149 - D236	MD236[341]	69310693	69310782	NR	NR
R170, R175	Ra	KH	15 " x 5 "	4646 - 400	R700400	R40H595	R40H9220	R40H3538	R40H3539
	Ra	WG	15 " x 5 "	1252 - 346	R700346	R40H597	R40H9200	R40H3540	R40H3541
R185	Ra	WG	15 " x 6 "	4596 - 381	R700381	R40H597	R40H9200	R40H3540	R40H3541
	Ra	WG	15 " x 7 "	4597 - 383	R700383	R40H597	R40H9200	R40H3540	R40H3541
Split System					R700321	R40H521	R40H9237	R40H3502	R40H3503
					R700321	R40H521	R40H9237	R40H3502	R40H3503
Split System F090, F120	Fa	WG	15 " x 3 "	1245C - 321	R700321	R40H521	R40H9237	R40H3502	R40H3503
	Fa	WG	15 " x 3 "	1245C - 321	R700321	R40H521	R40H9237	R40H3502	R40H3503
1985									
	Fd	DN		7149 - D236	MD236[341]	69310693	R40H5523	NR	NR
	Fd	DN		7149 - D236	MD236[341]	69310693	R40H5523	NR	NR
	Fd	DN		7149 - D236	MD236[341]	69310693	R40H5523	NR	NR
	Fd	DN		7141 - D224	MD224[340]	69310693	60050153	NR	NR
	Ra	LG	15 " x 5 "	4528A - 542	N/A	R40H618	NR	SP7888S	SP7888S
	Ra	LG	15 " x 5 "	4528A - 542	N/A	R40H618	NR	NR	NR
	Ra	LG	15 " x 6 "	4504A - 543	N/A	R40H618	NR	SP7888S	SP7888S
	Ra	LG	15 " x 6 "	4504A - 543	N/A	R40H618	NR	NR	NR
	Ra	LG	15 " x 6 "	4504A - 543	N/A	R40H618	NR	NR	NR
	Ra	LG	15 " x 6 "	4504A - 543	N/A	R40H618	NR	SP7887S	SP7887S
	Ra	LG	15 " x 7 "	4505A - 544	N/A	R40H618	NR	SP7888S	SP7888S
	Ra	LG	15 " x 7 "	4505A - 544	N/A	R40H618	NR	NR	NR
	Ra	LG	15 " x 7 "	4505A - 544	N/A	R40H618	NR	SP7887S	SP7887S
	Ra	LG	15 " x 7 "	4505A - 544	N/A	R40H618	NR	NR	NR
F050, F055, F060	Fa	KH	14 " x 2-1/2 "	2060 - 361	Discontinued	R40H596	R40H9219	R40H3536	R40H3537
F070	Fa	WG	15 " x 3 "	1245C - 321	R700321	R40H521	R40H9237	R40H3502	R40H3503
	Fa	WG	15 " x 3 "	1245C - 321	R700321	R40H521	R40H9237	R40H3502	R40H3503
	Fd	DN		7141 - D224	MD224[340]	69310693	60050153	NR	NR
F080, F090	Fd	DN		7149 - D236	MD236[341]	69310693	R40H5523	NR	NR
	Fd	DN		7149 - D236	MD236[341]	69310693	R40H5523	NR	NR
R170, R175	Ra	KH	15 " x 5 "	4646 - 400	R700400	R40H595	R40H9220	R40H3538	R40H3539
	Ra	WG	15 " x 5 "	1252 - 346	R700346	R40H597	R40H9200	R40H3540	R40H3541
R185	Ra	WG	15 " x 6 "	4596 - 381	R700381	R40H597	R40H9200	R40H3540	R40H3541
	Ra	WG	15 " x 7 "	4597 - 383	R700383	R40H597	R40H9200	R40H3540	R40H3541
Split System					R700321	R40H521	R40H9237	R40H3502	R40H3503
					R700321	R40H521	R40H9237	R40H3502	R40H3503
Split System F090, F120	Fa	WG	15 " x 3 "	1245C - 321	R700321	R40H521	R40H9237	R40H3502	R40H3503

9 - 6 Stud, Dayton Rotor, Hat Style
53 - Power Brakes
188 - 6 Stud, 9.251" Hub
37 - Also available as a New unit
186 - 10 Stud
204 - Right Hand; use E-4057 for Left Hand Expander Kits
41 - Aluminum piston
187 - 6 Stud, 6.443" Hub
329 - Forward

MERITOR DRUM OR ROTOR NO.	CALIPER OR CYLINDER BORE SIZE	MERITOR CALIPER OR WHEEL CYLINDER (LEFT)	MERITOR CALIPER OR WHEEL CYLINDER (RIGHT)	MERITOR CALIPER OR WHEEL CYLINDER REPAIR KIT	MERITOR CALIPER PISTON	MERITOR MASTER CYLINDER	MERITOR MASTER CYLINDER KIT	MERITOR BRAKE HOSE (LEFT)	MERITOR BRAKE HOSE (RIGHT)
									FORD(Cont.)
									F800 SERIES: CONVENTIONAL(Cont.)
N/A	1-5/8 "	201181	201182	SP7895S	NR	-	-	N/A	N/A
N/A	1-3/4 "	201179X	201180X	SP7873S	SP7880S[204]	-	-	N/A	N/A
N/A	1-3/4 "	201183X	201184X[329]	SP7873S	NR	-	-	N/A	N/A
N/A	1-3/4 "	201179X	201180X	SP7873S	SP7880S[204]	-	-	N/A	N/A
N/A	1-3/4 "	201183X	201184X[329]	SP7873S	NR	-	-	N/A	N/A
23-122703-002[186]	2-7/8 "	60050145X	60050145X[37]	60050146	69270702[41]	R4111999[53]	R4122386	R4577461	R4577461
23-122691-002[188]	2-7/8 "	60050145X	60050145X[37]	60050146	69270702[41]	R4111999[53]	R4122386	R4577461	R4577461
23-122743-002[187]	2-7/8 "	60050145X	60050145X[37]	60050146	69270702[41]	R4111999[53]	R4122386	R4577461	R4577461
23-122700-002[9]	2-1/2 "	R424244X	R424244X[37]	60050266	69270757[41]	R4111999[53]	R4122386	R4577461	R4577461
N/A	1-5/8 "	201181	201182	SP7895S	NR	-	-	N/A	N/A
N/A	1-5/8 "	201185	201186[329]	SP7895S	NR	-	-	N/A	N/A
N/A	1-3/4 "	201183X	201184X[329]	SP7873S	NR	-	-	N/A	N/A
N/A	1-3/4 "	201179X	201180X	SP7873S	SP7880S[204]	-	-	N/A	N/A
N/A	1-3/4 "	201179X	201180X	SP7873S	SP7880S[204]	-	-	N/A	N/A
N/A	1-3/4 "	201183X	201184X[329]	SP7873S	NR	-	-	N/A	N/A
N/A	1-3/4 "	201183X	201184X[329]	SP7873S	NR	-	-	N/A	N/A
N/A	1-3/4 "	201179X	201180X	SP7873S	SP7880S[204]	-	-	N/A	N/A
N/A	1-3/4 "	201179X	201180X	SP7873S	SP7880S[204]	-	-	N/A	N/A
N/A	1-3/4 "	201183X	201184X[329]	SP7873S	NR	-	-	N/A	N/A
N/A	1.09375	R4133484	R4133485	R4166819	NR	-	-	-	-
N/A	1-1/8 "	R4133714	R4133715	R4166926	NR	-	-	-	-
N/A	1-1/8 "	R4133716	R4133717	R4166926	NR	-	-	-	-
23-122700-002[9]	2-1/2 "	R424244X	R424244X[37]	60050266	69270757[41]	R4111999[53]	R4122386	R4577461	R4577461
23-122691-002[188]	2-7/8 "	60050145X	60050145X[37]	60050146	69270702[41]	R4111999[53]	R4122386	R4577461	R4577461
23-122703-002[186]	2-7/8 "	60050145X	60050145X[37]	60050146	69270702[41]	R4111999[53]	R4122386	R4577461	R4577461
N/A	1-1/2 "	R4033607	R4033607	R4166818	NR	-	-	-	-
N/A	1-5/8 "	R4133338	R4133338	R4166689	NR	-	-	-	-
N/A	1-5/8 "	R4133338	R4133338	R4166689	NR	-	-	-	-
N/A	1-3/4 "	R4133400	R4133400	R4166917	NR	-	-	-	-
N/A		R4133714	R4133715	R4166926	NR	N/A[358]	R4122688	-	-
N/A		R4133719	R4133718	R4166926	NR	N/A[358]	R4122688	-	-
N/A	1-1/4 "	R4133720	R4133721	R4166923	NR	-	-	-	-
N/A	1-1/4 "	R4133581	R4133581	R4166923	NR	-	-	-	-
23-122691-002[188]	2-7/8 "	60050145X	60050145X[37]	60050146	69270702[41]	R4111999[53]	R4122386	R4577461	R4577461
23-122703-002[186]	2-7/8 "	60050145X	60050145X[37]	60050146	69270702[41]	R4111999[53]	R4122386	R4577461	R4577461
23-122743-002[187]	2-7/8 "	60050145X	60050145X[37]	60050146	69270702[41]	R4111999[53]	R4122386	R4577461	R4577461
23-122700-002[9]	2-1/2 "	R424244X	R424244X[37]	60050266	69270757[41]	R4111999[53]	R4122386	R4577461	R4577461
N/A	1-5/8 "	201185	201186[329]	SP7895S	NR	-	-	N/A	N/A
N/A	1-5/8 "	201181	201182	SP7895S	NR	-	-	N/A	N/A
N/A	1-5/8 "	201185	201186[329]	SP7895S	NR	-	-	N/A	N/A
N/A	1-5/8 "	201181	201182	SP7895S	NR	-	-	N/A	N/A
N/A	1-3/4 "	201179X	201180X	SP7873S	SP7880S[204]	-	-	N/A	N/A
N/A	1-3/4 "	201183X	201184X[329]	SP7873S	NR	-	-	N/A	N/A
N/A	1-5/8 "	201185	201186[329]	SP7895S	NR	-	-	N/A	N/A
N/A	1-5/8 "	201181	201182	SP7895S	NR	-	-	N/A	N/A
N/A	1-3/4 "	201183X	201184X[329]	SP7873S	NR	-	-	N/A	N/A
N/A	1-3/4 "	201179X	201180X	SP7873S	SP7880S[204]	-	-	N/A	N/A
N/A	1.09375	R4133484	R4133485	R4166819	NR	-	-	-	-
N/A	1-1/8 "	R4133716	R4133717	R4166926	NR	-	-	-	-
N/A	1-1/8 "	R4133714	R4133715	R4166926	NR	-	-	-	-
23-122700-002[9]	2-1/2 "	R424244X	R424244X[37]	60050266	69270757[41]	R4111999[53]	R4122386	R4577461	R4577461
23-122691-002[188]	2-7/8 "	60050145X	60050145X[37]	60050146	69270702[41]	R4111999[53]	R4122386	R4577461	R4577461
23-122703-002[186]	2-7/8 "	60050145X	60050145X[37]	60050146	69270702[41]	R4111999[53]	R4122386	R4577461	R4577461
N/A	1-1/2 "	R4033607	R4033607	R4166818	NR	-	-	-	-
N/A	1-5/8 "	R4133338	R4133338	R4166689	NR	-	-	-	-
N/A	1-5/8 "	R4133338	R4133338	R4166689	NR	-	-	-	-
N/A	1-3/4 "	R4133400	R4133400	R4166917	NR	-	-	-	-
N/A		R4133714	R4133715	R4166926	NR	N/A[358]	R4122688	-	-
N/A		R4133719	R4133718	R4166926	NR	N/A[358]	R4122688	-	-
N/A	1-1/4 "	R4133581	R4133581	R4166923	NR	-	-	-	-

340 - Use 69160457 for Disc Pad Retainer Clip

341 - Use E-8921 for Disc Pad Retainer Clip

358 - Split System

MAKE MODEL YEAR AXLE CODE AXLE WEIGHT	AXLE & BRK. TYPE	BRK. MFG.	BRAKE SIZE	FMSI	MERITOR DISC PAD OR BRAKE SHOE	MERITOR GUIDE PIN OR RETURN SPRING KIT	MERITOR CALIPER HWD. KIT OR RETURN SPRING KIT	MERITOR ADJUSTER KIT (LEFT WHEEL)	MERITOR ADJUSTER KIT (RIGHT WHEEL)
FORD(Cont.)									
F800 SERIES: CONVENTIONAL(Cont.)									
1985									
Split System									
F090, F120	Fa	WG	15 " x 3 "	1245C - 321	R700321	R40H521	R40H9237	R40H3502	R40H3503
1984									
	Fd	DN		7149 - D236	MD236[341]	69310693	R40H5523	NR	NR
	Fd	DN		7141 - D224	MD224[340]	69310693	60050153	NR	NR
	Fd	DN		7149 - D236	MD236[341]	69310693	R40H5523	NR	NR
	Fd	DN		7149 - D236	MD236[341]	69310693	R40H5523	NR	NR
	Ra	LG	15 " x 5 "	4528A - 542	N/A	R40H618	NR	NR	NR
	Ra	LG	15 " x 5 "	4528A - 542	N/A	R40H618	NR	SP7888S	SP7888S
	Ra	LG	15 " x 6 "	4504A - 543	N/A	R40H618	NR	NR	NR
	Ra	LG	15 " x 6 "	4504A - 543	N/A	R40H618	NR	SP7887S	SP7887S
	Ra	LG	15 " x 6 "	4504A - 543	N/A	R40H618	NR	NR	NR
	Ra	LG	15 " x 6 "	4504A - 543	N/A	R40H618	NR	SP7888S	SP7888S
	Ra	LG	15 " x 7 "	4505A - 544	N/A	R40H618	NR	SP7888S	SP7888S
	Ra	LG	15 " x 7 "	4505A - 544	N/A	R40H618	NR	NR	NR
	Ra	LG	15 " x 7 "	4505A - 544	N/A	R40H618	NR	NR	NR
	Ra	LG	15 " x 7 "	4505A - 544	N/A	R40H618	NR	SP7887S	SP7887S
F050, F055, F060	Fa	KH	14 " x 2-1/2 "	2060 - 361	Discontinued	R40H596	R40H9219	R40H3536	R40H3537
F070	Fa	WG	15 " x 3 "	1245C - 321	R700321	R40H521	R40H9237	R40H3502	R40H3503
	Fa	WG	15 " x 3 "	1245C - 321	R700321	R40H521	R40H9237	R40H3502	R40H3503
	Fd	DN		7141 - D224	MD224[340]	69310693	60050153	NR	NR
F080, F090	Fd	DN		7149 - D236	MD236[341]	69310693	R40H5523	NR	NR
	Fd	DN		7149 - D236	MD236[341]	69310693	R40H5523	NR	NR
R170, R175	Ra	KH	15 " x 5 "	4646 - 400	R700400	R40H595	R40H9220	R40H3538	R40H3539
	Ra	WG	15 " x 5 "	1252 - 346	R700346	R40H597	R40H9200	R40H3540	R40H3541
R185	Ra	WG	15 " x 6 "	4596 - 381	R700381	R40H597	R40H9200	R40H3540	R40H3541
	Ra	WG	15 " x 7 "	4597 - 383	R700383	R40H597	R40H9200	R40H3540	R40H3541
Split System					R700321	R40H521	R40H9237	R40H3502	R40H3503
					R700321	R40H521	R40H9237	R40H3502	R40H3503
Split System									
F090, F120	Fa	WG	15 " x 3 "	1245C - 321	R700321	R40H521	R40H9237	R40H3502	R40H3503
	Fa	WG	15 " x 3 "	1245C - 321	R700321	R40H521	R40H9237	R40H3502	R40H3503
1983									
	Ra	LG	15 " x 6 "	4504A - 543	N/A	R40H618	NR	SP7888S	SP7888S
	Ra	LG	15 " x 6 "	4504A - 543	N/A	R40H618	NR	NR	NR
	Ra	LG	15 " x 7 "	4505A - 544	N/A	R40H618	NR	SP7888S	SP7888S
	Ra	LG	15 " x 7 "	4505A - 544	N/A	R40H618	NR	NR	NR
F050, F055, F060	Fa	KH	14 " x 2-1/2 "	2060 - 361	Discontinued	R40H596	R40H9219	R40H3536	R40H3537
F070	Fa	WG	15 " x 3 "	1245C - 321	R700321	R40H521	R40H9237	R40H3502	R40H3503
	Fa	WG	15 " x 3 "	1245C - 321	R700321	R40H521	R40H9237	R40H3502	R40H3503
	Fa	WG	15 " x 3 "	1245C - 321	R700321	R40H521	R40H9237	R40H3502	R40H3503
	Fa	WG	15 " x 3 "	1245C - 321	R700321	R40H521	R40H9237	R40H3502	R40H3503
	Fd	DN		7141 - D224	MD224[340]	69310693	60050153	NR	NR
F080, F090	Fd	DN		7149 - D236	MD236[341]	69310693	R40H5523	NR	NR
	Fd	DN		7149 - D236	MD236[341]	69310693	R40H5523	NR	NR
F090, F120	Fa	WG	15 " x 3 "	1245C - 321	R700321	R40H521	R40H9237	R40H3502	R40H3503
	Fa	WG	15 " x 3 "	1245C - 321	R700321	R40H521	R40H9237	R40H3502	R40H3503
R170, R175	Ra	KH	15 " x 5 "	4646 - 400	R700400	R40H595	R40H9220	R40H3538	R40H3539
	Ra	WG	15 " x 5 "	1252 - 346	R700346	R40H597	R40H9200	R40H3540	R40H3541
R185	Ra	WG	15 " x 6 "	4596 - 381	R700381	R40H597	R40H9200	R40H3540	R40H3541
	Ra	WG	15 " x 7 "	4597 - 383	R700383	R40H597	R40H9200	R40H3540	R40H3541
1982									
	Ra	LG	15 " x 6 "	4504A - 543	N/A	R40H618	NR	SP7888S	SP7888S
	Ra	LG	15 " x 6 "	4504A - 543	N/A	R40H618	NR	NR	NR
	Ra	LG	15 " x 7 "	4505A - 544	N/A	R40H618	NR	NR	NR
	Ra	LG	15 " x 7 "	4505A - 544	N/A	R40H618	NR	SP7888S	SP7888S
F050, F055, F060	Fa	KH	14 " x 2-1/2 "	2060 - 361	Discontinued	R40H596	R40H9219	R40H3536	R40H3537
F070	Fa	WG	15 " x 3 "	1245C - 321	R700321	R40H521	R40H9237	R40H3502	R40H3503
	Fa	WG	15 " x 3 "	1245C - 321	R700321	R40H521	R40H9237	R40H3502	R40H3503
	Fa	WG	15 " x 3 "	1245C - 321	R700321	R40H521	R40H9237	R40H3502	R40H3503
	Fa	WG	15 " x 3 "	1245C - 321	R700321	R40H521	R40H9237	R40H3502	R40H3503
	Fd	DN		7141 - D224	MD224[340]	69310693	60050153	NR	NR
F080, F090	Fd	DN		7149 - D236	MD236[341]	69310693	R40H5523	NR	NR

9 - 6 Stud, Dayton Rotor, Hat Style
53 - Power Brakes
188 - 6 Stud, 9.251" Hub

37 - Also available as a New unit
186 - 10 Stud
204 - Right Hand; use E-4057 for Left Hand Expander Kits

41 - Aluminum piston
187 - 6 Stud, 6.443" Hub
214 - Power Brakes, Split System

MERITOR DRUM OR ROTOR NO.	CALIPER OR CYLINDER BORE SIZE	MERITOR CALIPER OR WHEEL CYLINDER (LEFT)	MERITOR CALIPER OR WHEEL CYLINDER (RIGHT)	MERITOR CALIPER OR WHEEL CYLINDER REPAIR KIT	MERITOR CALIPER PISTON	MERITOR MASTER CYLINDER	MERITOR MASTER CYLINDER KIT	MERITOR BRAKE HOSE (LEFT)	MERITOR BRAKE HOSE (RIGHT)
									FORD(Cont.)
									F800 SERIES: CONVENTIONAL(Cont.)
N/A	1-1/4 "	R4133720	R4133721	R4166923	NR	-	-	-	-
23-122703-002[186]	2-7/8 "	60050145X	60050145X[37]	60050146	69270702[41]	R4111999[53]	R4122386	R4577461	R4577461
23-122700-002[9]	2-1/2 "	R424244X	R424244X[37]	60050266	69270757[41]	R4111999[53]	R4122386	R4577461	R4577461
23-122691-002[188]	2-7/8 "	60050145X	60050145X[37]	60050146	69270702[41]	R4111999[53]	R4122386	R4577461	R4577461
23-122743-002[187]	2-7/8 "	60050145X	60050145X[37]	60050146	69270702[41]	R4111999[53]	R4122386	R4577461	R4577461
N/A	1-5/8 "	201181	201182	SP7895S	NR	-	-	N/A	N/A
N/A	1-5/8 "	201185	201186[329]	SP7895S	NR	-	-	N/A	N/A
N/A	1-5/8 "	201181	201182	SP7895S	NR	-	-	N/A	N/A
N/A	1-3/4 "	201183X	201184X[329]	SP7873S	NR	-	-	N/A	N/A
N/A	1-3/4 "	201179X	201180X	SP7873S	SP7880S[204]	-	-	N/A	N/A
N/A	1-5/8 "	201185	201186[329]	SP7895S	NR	-	-	N/A	N/A
N/A	1-5/8 "	201185	201186[329]	SP7895S	NR	-	-	N/A	N/A
N/A	1-5/8 "	201181	201182	SP7895S	NR	-	-	N/A	N/A
N/A	1-3/4 "	201179X	201180X	SP7873S	SP7880S[204]	-	-	N/A	N/A
N/A	1-3/4 "	201183X	201184X[329]	SP7873S	NR	-	-	N/A	N/A
N/A	1.09375	R4133484	R4133485	R4166819	NR	-	-	-	-
N/A	1-1/8 "	R4133716	R4133717	R4166926	NR	-	-	-	-
N/A	1-1/8 "	R4133714	R4133715	R4166926	NR	-	-	-	-
23-122700-002[9]	2-1/2 "	R424244X	R424244X[37]	60050266	69270757[41]	R4111999[53]	R4122386	R4577461	R4577461
23-122691-002[188]	2-7/8 "	60050145X	60050145X[37]	60050146	69270702[41]	R4111999[53]	R4122386	R4577461	R4577461
23-122703-002[186]	2-7/8 "	60050145X	60050145X[37]	60050146	69270702[41]	R4111999[53]	R4122386	R4577461	R4577461
N/A	1-1/2 "	R4033607	R4033607	R4166818	NR	-	-	-	-
N/A	1-5/8 "	R4133338	R4133338	R4166689	NR	-	-	-	-
N/A	1-5/8 "	R4133338	R4133338	R4166689	NR	-	-	-	-
N/A	1-3/4 "	R4133400	R4133400	R4166917	NR	-	-	-	-
N/A		R4133714	R4133715	R4166926	NR	N/A[358]	R4122688	-	-
N/A		R4133719	R4133718	R4166926	NR	N/A[358]	R4122688	-	-
N/A	1-1/4 "	R4133581	R4133581	R4166923	NR	-	-	-	-
N/A	1-1/4 "	R4133720	R4133721	R4166923	NR	-	-	-	-
N/A	1-5/8 "	201185	201186[329]	SP7895S	NR	-	-	R4577147	R4577147
N/A	1-5/8 "	201181	201182	SP7895S	NR	-	-	R4577147	R4577147
N/A	1-5/8 "	201185	201186[329]	SP7895S	NR	-	-	R4577147	R4577147
N/A	1-5/8 "	201181	201182	SP7895S	NR	-	-	R4577147	R4577147
N/A	1.09375	R4133484	R4133485	R4166819	NR	R4111629[53]	R4122484	R4577460	R4577460
N/A	1-1/8 "	R4133714	R4133715	R4166926	NR	R4111911[219]	R4122387	R4577454	R4577455
N/A	1-1/8 "	R4133716	R4133717	R4166926	NR	R4111911[219]	R4122387	R4577454	R4577455
N/A	1-1/8 "	R4133714	R4133715	R4166926	NR	R4111992[214]	R4122386	R4577452	R4577453
N/A	1-1/8 "	R4133719	R4133718	R4166926	NR	R4111992[214]	R4122386	R4577452	R4577453
23-122700-002[9]	2-1/2 "	R424244X	R424244X[37]	60050266	69270757[41]	R4111992[214]	R4122386	R4577452	R4577453
23-122703-002[186]	2-7/8 "	60050145X	60050145X[37]	60050146	69270702[41]	R4111992[214]	R4122386	R4577452	R4577453
23-122691-002[188]	2-7/8 "	60050145X	60050145X[37]	60050146	69270702[41]	R4111992[214]	R4122386	R4577452	R4577453
N/A	1-1/4 "	R4133720	R4133721	R4166923	NR	R4111992[214]	R4122386	R4577452	R4577453
N/A	1-1/4 "	R4133581	R4133581	R4166923	NR	R4111992[214]	R4122386	R4577452	R4577453
N/A	1-1/2 "	R4033607	R4033607	R4166818	NR	-	-	R4577147	R4577147
N/A	1-5/8 "	R4133338	R4133338	R4166689	NR	-	-	R4577147	R4577147
N/A	1-5/8 "	R4133338	R4133338	R4166689	NR	-	-	R4577147	R4577147
N/A	1-3/4 "	R4133400	R4133400	R4166917	NR	-	-	R4577147	R4577147
N/A	1-5/8 "	201185	201186[329]	SP7895S	NR	-	-	R4577147	R4577147
N/A	1-5/8 "	201181	201182	SP7895S	NR	-	-	R4577147	R4577147
N/A	1-5/8 "	201181	201182	SP7895S	NR	-	-	R4577147	R4577147
N/A	1-5/8 "	201185	201186[329]	SP7895S	NR	-	-	R4577147	R4577147
N/A	1.09375	R4133484	R4133485	R4166819	NR	R4111629[53]	R4122484	R4577460	R4577460
N/A	1-1/8 "	R4133714	R4133715	R4166926	NR	R4111911[219]	R4122387	R4577454	R4577455
N/A	1-1/8 "	R4133716	R4133717	R4166926	NR	R4111911[219]	R4122387	R4577454	R4577455
N/A	1-1/8 "	R4133714	R4133715	R4166926	NR	R4111992[214]	R4122386	R4577452	R4577453
N/A	1-1/8 "	R4133719	R4133718	R4166926	NR	R4111992[214]	R4122386	R4577452	R4577453
23-122700-002[9]	2-1/2 "	R424244X	R424244X[37]	60050266	69270757[41]	R4111992[214]	R4122386	R4577452	R4577453
23-122691-002[188]	2-7/8 "	60050145X	60050145X[37]	60050146	69270702[41]	R4111992[214]	R4122386	R4577452	R4577453

219 - Power Brakes, Gasoline Engine with Vacuum Booster
329 - Forward
340 - Use 69160457 for Disc Pad Retainer Clip
341 - Use 69160445 for Disc Pad Retainer Clip
358 - Split System

MAKE MODEL YEAR AXLE CODE AXLE WEIGHT	AXLE & BRK. TYPE	BRK. MFG.	BRAKE SIZE	FMSI	MERITOR DISC PAD OR BRAKE SHOE	MERITOR GUIDE PIN OR RETURN SPRING KIT	MERITOR CALIPER HWD. KIT OR RETURN SPRING KIT	MERITOR ADJUSTER KIT (LEFT WHEEL)	MERITOR ADJUSTER KIT (RIGHT WHEEL)
FORD(Cont.)									
F800 SERIES: CONVENTIONAL(Cont.)									
1982									
	Fd	DN		7149 - D236	MD236[341]	69310693	R40H5523	NR	NR
F090, F120	Fa	WG	15 " x 3 "	1245C - 321	R700321	R40H521	R40H9237	R40H3502	R40H3503
	Fa	WG	15 " x 3 "	1245C - 321	R700321	R40H521	R40H9237	R40H3502	R40H3503
R170, R175	Ra	KH	15 " x 5 "	4646 - 400	R700400	R40H595	R40H9220	R40H3538	R40H3539
	Ra	WG	15 " x 5 "	1252 - 346	R700346	R40H597	R40H9200	R40H3540	R40H3541
R185	Ra	WG	15 " x 6 "	4596 - 381	R700381	R40H597	R40H9200	R40H3540	R40H3541
	Ra	WG	15 " x 7 "	4597 - 383	R700383	R40H597	R40H9200	R40H3540	R40H3541
1981									
	Ra	LG	15 " x 6 "	4504A - 543	N/A	R40H618	NR	NR	NR
	Ra	LG	15 " x 6 "	4504A - 543	N/A	R40H618	NR	SP7888S	SP7888S
	Ra	LG	15 " x 7 "	4505A - 544	N/A	R40H618	NR	SP7888S	SP7888S
	Ra	LG	15 " x 7 "	4505A - 544	N/A	R40H618	NR	NR	NR
F050, F055, F060	Fa	KH	14 " x 2-1/2 "	2060 - 361	Discontinued	R40H596	R40H9219	R40H3536	R40H3537
F070	Fa	WG	15 " x 3 "	1245C - 321	R700321	R40H521	R40H9237	R40H3502	R40H3503
	Fa	WG	15 " x 3 "	1245C - 321	R700321	R40H521	R40H9237	R40H3502	R40H3503
	Fa	WG	15 " x 3 "	1245C - 321	R700321	R40H521	R40H9237	R40H3502	R40H3503
	Fa	WG	15 " x 3 "	1245C - 321	R700321	R40H521	R40H9237	R40H3502	R40H3503
	Fd	DN		7141 - D224	MD224[340]	69310693	60050153	NR	NR
F080, F090	Fd	DN		7149 - D236	MD236[341]	69310693	R40H5523	NR	NR
	Fd	DN		7149 - D236	MD236[341]	69310693	R40H5523	NR	NR
F090, F120	Fa	WG	15 " x 3 "	1245C - 321	R700321	R40H521	R40H9237	R40H3502	R40H3503
	Fa	WG	15 " x 3 "	1245C - 321	R700321	R40H521	R40H9237	R40H3502	R40H3503
R170, R175	Ra	KH	15 " x 5 "	4646 - 400	R700400	R40H595	R40H9220	R40H3538	R40H3539
	Ra	WG	15 " x 5 "	1252 - 346	R700346	R40H597	R40H9200	R40H3540	R40H3541
R185	Ra	WG	15 " x 6 "	4596 - 381	R700381	R40H597	R40H9200	R40H3540	R40H3541
	Ra	WG	15 " x 7 "	4597 - 383	R700383	R40H597	R40H9200	R40H3540	R40H3541
1980									
	Ra	LG	15 " x 6 "	4504A - 543	N/A	R40H618	NR	NR	NR
	Ra	LG	15 " x 6 "	4504A - 543	N/A	R40H618	NR	SP7888S	SP7888S
	Ra	LG	15 " x 7 "	4505A - 544	N/A	R40H618	NR	NR	NR
	Ra	LG	15 " x 7 "	4505A - 544	N/A	R40H618	NR	SP7888S	SP7888S
F050, F055, F060	Fa	KH	14 " x 2-1/2 "	2060 - 361	Discontinued	R40H596	R40H9219	R40H3536	R40H3537
F070	Fa	WG	15 " x 3 "	1245C - 321	R700321	R40H521	R40H9237	R40H3502	R40H3503
	Fa	WG	15 " x 3 "	1245C - 321	R700321	R40H521	R40H9237	R40H3502	R40H3503
	Fa	WG	15 " x 3 "	1245C - 321	R700321	R40H521	R40H9237	R40H3502	R40H3503
	Fa	WG	15 " x 3 "	1245C - 321	R700321	R40H521	R40H9237	R40H3502	R40H3503
	Fd	DN		7141 - D224	MD224[340]	69310693	60050153	NR	NR
F080, F090	Fd	DN		7149 - D236	MD236[341]	69310693	R40H5523	NR	NR
	Fd	DN		7149 - D236	MD236[341]	69310693	R40H5523	NR	NR
F090, F120	Fa	WG	15 " x 3 "	1245C - 321	R700321	R40H521	R40H9237	R40H3502	R40H3503
	Fa	WG	15 " x 3 "	1245C - 321	R700321	R40H521	R40H9237	R40H3502	R40H3503
R170, R175	Ra	KH	15 " x 5 "	4646 - 400	R700400	R40H595	R40H9220	R40H3538	R40H3539
	Ra	WG	15 " x 5 "	1252 - 346	R700346	R40H597	R40H9200	R40H3540	R40H3541
R185	Ra	WG	15 " x 6 "	4596 - 381	R700381	R40H597	R40H9200	R40H3540	R40H3541
	Ra	WG	15 " x 7 "	4597 - 383	R700383	R40H597	R40H9200	R40H3540	R40H3541
1979									
F050, F055, F060	Fa	KH	14 " x 2-1/2 "	2060 - 361	Discontinued	R40H596	R40H9219	R40H3536	R40H3537
F070	Fa	WG	15 " x 3 "	1245C - 321	R700321	R40H521	R40H9237	R40H3502	R40H3503
	Fa	WG	15 " x 3 "	1245C - 321	R700321	R40H521	R40H9237	R40H3502	R40H3503
	Fd	DN		7141 - D224	MD224[340]	69310693	60050153	NR	NR
F080, F090	Fd	DN		7149 - D236	MD236[341]	69310693	R40H5523	NR	NR
	Fd	DN		7149 - D236	MD236[341]	69310693	R40H5523	NR	NR
R170, R175	Ra	KH	15 " x 5 "	4646 - 400	R700400	R40H595	R40H9220	R40H3538	R40H3539
	Ra	WG	15 " x 5 "	1252 - 346	R700346	R40H597	R40H9200	R40H3540	R40H3541
R185	Ra	WG	15 " x 6 "	4596 - 381	R700381	R40H597	R40H9200	R40H3540	R40H3541
	Ra	WG	15 " x 7 "	4597 - 383	R700383	R40H597	R40H9200	R40H3540	R40H3541
Split System					R700321	R40H521	R40H9237	R40H3502	R40H3503
					R700321	R40H521	R40H9237	R40H3502	R40H3503
Split System									
F090, F120	Fa	WG	15 " x 3 "	1245C - 321	R700321	R40H521	R40H9237	R40H3502	R40H3503
	Fa	WG	15 " x 3 "	1245C - 321	R700321	R40H521	R40H9237	R40H3502	R40H3503
1978									
F050, F055, F060	Fa	KH	14 " x 2-1/2 "	2060 - 361	Discontinued	R40H596	R40H9219	R40H3536	R40H3537

9 - 6 Stud, Dayton Rotor, Hat Style
53 - Power Brakes
214 - Power Brakes, Split System
37 - Also available as a New unit
186 - 10 Stud
219 - Power Brakes, Gasoline Engine with Vacuum Booster
41 - Aluminum piston
188 - 6 Stud, 9.251" Hub
329 - Forward

MERITOR DRUM OR ROTOR NO.	CALIPER OR CYLINDER BORE SIZE	MERITOR CALIPER OR WHEEL CYLINDER (LEFT)	MERITOR CALIPER OR WHEEL CYLINDER (RIGHT)	MERITOR CALIPER OR WHEEL CYLINDER REPAIR KIT	MERITOR CALIPER PISTON	MERITOR MASTER CYLINDER	MERITOR MASTER CYLINDER KIT	MERITOR BRAKE HOSE (LEFT)	MERITOR BRAKE HOSE (RIGHT)
									FORD(Cont.)
									F800 SERIES: CONVENTIONAL(Cont.)
23-122703-002[186]	2-7/8 "	60050145X	60050145X[37]	60050146	69270702[41]	R4111992[214]	R4122386	R4577452	R4577453
N/A	1-1/4 "	R4133720	R4133721	R4166923	NR	R4111992[214]	R4122386	R4577452	R4577453
N/A	1-1/4 "	R4133581	R4133581	R4166923	NR	R4111992[214]	R4122386	R4577452	R4577453
N/A	1-1/2 "	R4033607	R4033607	R4166818	NR	-	-	R4577147	R4577147
N/A	1-5/8 "	R4133338	R4133338	R4166689	NR	-	-	R4577147	R4577147
N/A	1-5/8 "	R4133338	R4133338	R4166689	NR	-	-	R4577147	R4577147
N/A	1-3/4 "	R4133400	R4133400	R4166917	NR	-	-	R4577147	R4577147
N/A	1-5/8 "	201181	201182	SP7895S	NR	-	-	R4577147	R4577147
N/A	1-5/8 "	201185	201186[329]	SP7895S	NR	-	-	R4577147	R4577147
N/A	1-5/8 "	201185	201186[329]	SP7895S	NR	-	-	R4577147	R4577147
N/A	1-5/8 "	201181	201182	SP7895S	NR	-	-	R4577147	R4577147
N/A	1.09375	R4133484	R4133485	R4166819	NR	R4111629[53]	R4122484	R4577460	R4577460
N/A	1-1/8 "	R4133714	R4133715	R4166926	NR	R4111911[219]	R4122387	R4577454	R4577455
N/A	1-1/8 "	R4133716	R4133717	R4166926	NR	R4111911[219]	R4122387	R4577454	R4577455
N/A	1-1/8 "	R4133719	R4133718	R4166926	NR	R4111992[214]	R4122386	R4577452	R4577453
N/A	1-1/8 "	R4133714	R4133715	R4166926	NR	R4111992[214]	R4122386	R4577452	R4577453
23-122700-002[9]	2-1/2 "	R424244X	R424244X[37]	60050266	69270757[41]	R4111992[214]	R4122386	R4577452	R4577453
23-122703-002[186]	2-7/8 "	60050145X	60050145X[37]	60050146	69270702[41]	R4111992[214]	R4122386	R4577452	R4577453
23-122691-002[188]	2-7/8 "	60050145X	60050145X[37]	60050146	69270702[41]	R4111992[214]	R4122386	R4577452	R4577453
N/A	1-1/4 "	R4133581	R4133581	R4166923	NR	R4111992[214]	R4122386	R4577452	R4577453
N/A	1-1/4 "	R4133720	R4133721	R4166923	NR	R4111992[214]	R4122386	R4577452	R4577453
N/A	1-1/2 "	R4033607	R4033607	R4166818	NR	-	-	R4577147	R4577147
N/A	1-5/8 "	R4133338	R4133338	R4166689	NR	-	-	R4577147	R4577147
N/A	1-5/8 "	R4133338	R4133338	R4166689	NR	-	-	R4577147	R4577147
N/A	1-3/4 "	R4133400	R4133400	R4166917	NR	-	-	R4577147	R4577147
N/A	1-5/8 "	201181	201182	SP7895S	NR	-	-	R4577147	R4577147
N/A	1-5/8 "	201185	201186[329]	SP7895S	NR	-	-	R4577147	R4577147
N/A	1-5/8 "	201181	201182	SP7895S	NR	-	-	R4577147	R4577147
N/A	1-5/8 "	201185	201186[329]	SP7895S	NR	-	-	R4577147	R4577147
N/A	1.09375	R4133484	R4133485	R4166819	NR	R4111629[53]	R4122484	R4577460	R4577460
N/A	1-1/8 "	R4133714	R4133715	R4166926	NR	R4111911[219]	R4122387	R4577454	R4577455
N/A	1-1/8 "	R4133716	R4133717	R4166926	NR	R4111911[219]	R4122387	R4577454	R4577455
N/A	1-1/8 "	R4133719	R4133718	R4166926	NR	R4111992[214]	R4122386	R4577452	R4577453
N/A	1-1/8 "	R4133714	R4133715	R4166926	NR	R4111992[214]	R4122386	R4577452	R4577453
23-122700-002[9]	2-1/2 "	R424244X	R424244X[37]	60050266	69270757[41]	R4111992[214]	R4122386	R4577452	R4577453
23-122691-002[188]	2-7/8 "	60050145X	60050145X[37]	60050146	69270702[41]	R4111992[214]	R4122386	R4577452	R4577453
23-122703-002[186]	2-7/8 "	60050145X	60050145X[37]	60050146	69270702[41]	R4111992[214]	R4122386	R4577452	R4577453
N/A	1-1/4 "	R4133720	R4133721	R4166923	NR	R4111992[214]	R4122386	R4577452	R4577453
N/A	1-1/4 "	R4133581	R4133581	R4166923	NR	R4111992[214]	R4122386	R4577452	R4577453
N/A	1-1/2 "	R4033607	R4033607	R4166818	NR	-	-	R4577147	R4577147
N/A	1-5/8 "	R4133338	R4133338	R4166689	NR	-	-	R4577147	R4577147
N/A	1-5/8 "	R4133338	R4133338	R4166689	NR	-	-	R4577147	R4577147
N/A	1-3/4 "	R4133400	R4133400	R4166917	NR	-	-	R4577147	R4577147
N/A	1.09375	R4133484	R4133485	R4166819	NR	-	-	-	-
N/A	1-1/8 "	R4133716	R4133717	R4166926	NR	-	-	-	-
N/A	1-1/8 "	R4133714	R4133715	R4166926	NR	-	-	-	-
23-122700-002[9]	2-1/2 "	R424244X	R424244X[37]	60050266	69270757[41]	-	-	-	-
23-122691-002[188]	2-7/8 "	60050145X	60050145X[37]	60050146	69270702[41]	-	-	-	-
23-122703-002[186]	2-7/8 "	60050145X	60050145X[37]	60050146	69270702[41]	-	-	-	-
N/A	1-1/2 "	R4033607	R4033607	R4166818	NR	-	-	-	-
N/A	1-5/8 "	R4133338	R4133338	R4166689	NR	-	-	-	-
N/A	1-5/8 "	R4133338	R4133338	R4166689	NR	-	-	-	-
N/A	1-3/4 "	R4133400	R4133400	R4166917	NR	-	-	-	-
N/A		R4133714	R4133715	R4166926	NR	N/A[358]	R4122688	-	-
N/A		R4133719	R4133718	R4166926	NR	N/A[358]	R4122688	-	-
N/A	1-1/4 "	R4133720	R4133721	R4166923	NR	-	-	-	-
N/A	1-1/4 "	R4133581	R4133581	R4166923	NR	-	-	-	-
N/A	1.09375	R4133484	R4133485	R4166819	NR	-	-	-	-

340 - Use 69160457 for Disc Pad Retainer Clip

341 - Use 69160445 for Disc Pad Retainer Clip

358 - Split System

MAKE MODEL YEAR AXLE CODE AXLE WEIGHT	AXLE & BRK. TYPE	BRK. MFG.	BRAKE SIZE	FMSI	MERITOR DISC PAD OR BRAKE SHOE	MERITOR GUIDE PIN OR RETURN SPRING KIT	MERITOR CALIPER HWD. KIT OR RETURN SPRING KIT	MERITOR ADJUSTER KIT (LEFT WHEEL)	MERITOR ADJUSTER KIT (RIGHT WHEEL)
FORD(Cont.)									
F800 SERIES: CONVENTIONAL(Cont.)									
1978									
F070	Fa	WG	15 " x 3 "	1245C - 321	R700321	R40H521	R40H9237	R40H3502	R40H3503
	Fa	WG	15 " x 3 "	1245C - 321	R700321	R40H521	R40H9237	R40H3502	R40H3503
	Fd	DN		7141 - D224	MD224[340]	69310693	60050153	NR	NR
F080, F090	Fd	DN		7149 - D236	MD236[341]	69310693	R40H5523	NR	NR
	Fd	DN		7149 - D236	MD236[341]	69310693	R40H5523	NR	NR
R170, R175	Ra	KH	15 " x 5 "	4646 - 400	R700400	R40H595	R40H9220	R40H3538	R40H3539
	Ra	WG	15 " x 5 "	1252 - 346	R700346	R40H597	R40H9200	R40H3540	R40H3541
R185	Ra	WG	15 " x 6 "	4596 - 381	R700381	R40H597	R40H9200	R40H3540	R40H3541
	Ra	WG	15 " x 7 "	4597 - 383	R700383	R40H597	R40H9200	R40H3540	R40H3541
Split System					R700321	R40H521	R40H9237	R40H3502	R40H3503
					R700321	R40H521	R40H9237	R40H3502	R40H3503
Split System									
F090, F120	Fa	WG	15 " x 3 "	1245C - 321	R700321	R40H521	R40H9237	R40H3502	R40H3503
	Fa	WG	15 " x 3 "	1245C - 321	R700321	R40H521	R40H9237	R40H3502	R40H3503
1977									
F050, F055, F060	Fa	KH	14 " x 2-1/2 "	2060 - 361	Discontinued	R40H596	R40H9219	R40H3536	R40H3537
	Fa	KH	14 " x 2-1/2 "	2060 - 361	Discontinued	R40H596	R40H9219	R40H3536	R40H3537
F070	Fa	WG	15 " x 3 "	1245C - 321	R700321	R40H521	R40H9237	R40H3502	R40H3503
	Fa	WG	15 " x 3 "	1245C - 321	R700321	R40H521	R40H9237	R40H3502	R40H3503
	Fa	WG	15 " x 3 "	1245C - 321	R700321	R40H521	R40H9237	R40H3502	R40H3503
	Fa	WG	15 " x 3 "	1245C - 321	R700321	R40H521	R40H9237	R40H3502	R40H3503
	Fa	WG	15 " x 3 "	1245C - 321	R700321	R40H521	R40H9237	R40H3502	R40H3503
	Fa	WG	15 " x 3 "	1245C - 321	R700321	R40H521	R40H9237	R40H3502	R40H3503
	Fa	WG	15 " x 3 "	1245C - 321	R700321	R40H521	R40H9237	R40H3502	R40H3503
	Fa	WG	15 " x 3 "	1245C - 321	R700321	R40H521	R40H9237	R40H3502	R40H3503
	Fd	DN		7141 - D224	MD224[340]	69310693	60050153	NR	NR
F080, F090	Fd	DN		7149 - D236	MD236[341]	69310693	R40H5523	NR	NR
	Fd	DN		7149 - D236	MD236[341]	69310693	R40H5523	NR	NR
F090, F120	Fa	WG	15 " x 3 "	1245C - 321	R700321	R40H521	R40H9237	R40H3502	R40H3503
	Fa	WG	15 " x 3 "	1245C - 321	R700321	R40H521	R40H9237	R40H3502	R40H3503
	Fa	WG	15 " x 3 "	1245C - 321	R700321	R40H521	R40H9237	R40H3502	R40H3503
	Fa	WG	15 " x 3 "	1245C - 321	R700321	R40H521	R40H9237	R40H3502	R40H3503
R170, R175	Ra	KH	15 " x 5 "	4646 - 400	R700400	R40H595	R40H9220	R40H3538	R40H3539
	Ra	KH	15 " x 5 "	4646 - 400	R700400	R40H595	R40H9220	R40H3538	R40H3539
	Ra	KH	15 " x 5 "	4646 - 400	R700400	R40H595	R40H9220	R40H3538	R40H3539
	Ra	WG	15 " x 5 "	1252 - 346	R700346	R40H597	R40H9200	R40H3540	R40H3541
	Ra	WG	15 " x 5 "	1252 - 346	R700346	R40H597	R40H9200	R40H3540	R40H3541
R185	Ra	WG	15 " x 6 "	4596 - 381	R700381	R40H597	R40H9200	R40H3540	R40H3541
	Ra	WG	15 " x 6 "	4596 - 381	R700381	R40H597	R40H9200	R40H3540	R40H3541
	Ra	WG	15 " x 7 "	4597 - 383	R700383	R40H597	R40H9200	R40H3540	R40H3541
	Ra	WG	15 " x 7 "	4597 - 383	R700383	R40H597	R40H9200	R40H3540	R40H3541
1976									
F050, F055, F060	Fa	KH	14 " x 2-1/2 "	2060 - 361	Discontinued	R40H596	R40H9219	R40H3536	R40H3537
	Fa	KH	14 " x 2-1/2 "	2060 - 361	Discontinued	R40H596	R40H9219	R40H3536	R40H3537
F070	Fd	DN		7141 - D224	MD224[340]	69310693	60050153	NR	NR
F080, F090	Fd	DN		7149 - D236	MD236[341]	69310693	R40H5523	NR	NR
	Fd	DN		7149 - D236	MD236[341]	69310693	R40H5523	NR	NR
R170, R175	Ra	KH	15 " x 5 "	4646 - 400	R700400	R40H595	R40H9220	R40H3538	R40H3539
	Ra	KH	15 " x 5 "	4646 - 400	R700400	R40H595	R40H9220	R40H3538	R40H3539
	Ra	KH	15 " x 5 "	4646 - 400	R700400	R40H595	R40H9220	R40H3538	R40H3539
	Ra	WG	15 " x 5 "	1252 - 346	R700346	R40H597	R40H9200	R40H3540	R40H3541
	Ra	WG	15 " x 5 "	1252 - 346	R700346	R40H597	R40H9200	R40H3540	R40H3541
R185	Ra	WG	15 " x 6 "	4596 - 381	R700381	R40H597	R40H9200	R40H3540	R40H3541
	Ra	WG	15 " x 6 "	4596 - 381	R700381	R40H597	R40H9200	R40H3540	R40H3541
	Ra	WG	15 " x 7 "	4597 - 383	R700383	R40H597	R40H9200	R40H3540	R40H3541
	Ra	WG	15 " x 7 "	4597 - 383	R700383	R40H597	R40H9200	R40H3540	R40H3541
Single System									
F070	Fa	WG	15 " x 3 "	1245C - 321	R700321	R40H521	R40H9237	R40H3502	R40H3503
	Fa	WG	15 " x 3 "	1245C - 321	R700321	R40H521	R40H9237	R40H3502	R40H3503
	Fa	WG	15 " x 3 "	1245C - 321	R700321	R40H521	R40H9237	R40H3502	R40H3503
	Fa	WG	15 " x 3 "	1245C - 321	R700321	R40H521	R40H9237	R40H3502	R40H3503
Split System									
F070	Fa	WG	15 " x 3 "	1245C - 321	R700321	R40H521	R40H9237	R40H3502	R40H3503

9 - 6 Stud, Dayton Rotor, Hat Style
42 - 6 Stud, Dayton Rotor, "U" Style
340 - Use 69160457 for Disc Pad Retainer Clip
37 - Also available as a New unit
186 - 10 Stud
341 - Use 69160445 for Disc Pad Retainer Clip
41 - Aluminum piston
188 - 6 Stud, 9.251" Hub
358 - Split System

MERITOR DRUM OR ROTOR NO.	CALIPER OR CYLINDER BORE SIZE	MERITOR CALIPER OR WHEEL CYLINDER (LEFT)	MERITOR CALIPER OR WHEEL CYLINDER (RIGHT)	MERITOR CALIPER OR WHEEL CYLINDER REPAIR KIT	MERITOR CALIPER PISTON	MERITOR MASTER CYLINDER	MERITOR MASTER CYLINDER KIT	MERITOR BRAKE HOSE (LEFT)	MERITOR BRAKE HOSE (RIGHT)
									FORD(Cont.)
									F800 SERIES: CONVENTIONAL(Cont.)
N/A	1-1/8 "	R4133714	R4133715	R4166926	NR	-	-	-	-
N/A	1-1/8 "	R4133716	R4133717	R4166926	NR	-	-	-	-
23-122700-002[9]	2-1/2 "	R424244X	R424244X[37]	60050266	69270757[41]	-	-	-	-
23-122703-002[186]	2-7/8 "	60050145X	60050145X[37]	60050146	69270702[41]	-	-	-	-
23-122691-002[188]	2-7/8 "	60050145X	60050145X[37]	60050146	69270702[41]	-	-	-	-
N/A	1-1/2 "	R4033607	R4033607	R4166818	NR	-	-	-	-
N/A	1-5/8 "	R4133338	R4133338	R4166689	NR	-	-	-	-
N/A	1-5/8 "	R4133338	R4133338	R4166689	NR	-	-	-	-
N/A	1-3/4 "	R4133400	R4133400	R4166917	NR	-	-	-	-
N/A		R4133719	R4133718	R4166926	NR	N/A[358]	R4122688	-	-
N/A		R4133714	R4133715	R4166926	NR	N/A[358]	R4122688	-	-
N/A	1-1/4 "	R4133581	R4133581	R4166923	NR	-	-	-	-
N/A	1-1/4 "	R4133720	R4133721	R4166923	NR	-	-	-	-
-	1.09375	R4133484	R4133485	R4166819	NR	-	-	-	-
-	1.09375	R4133484	R4133485	R4166819	NR	-	-	-	-
-	1-1/8 "	R4133719	R4133718	R4166926	NR	N/A[358]	R4122688	-	-
-	1-1/8 "	R4133714	R4133715	R4166926	NR	N/A[358]	R4122688	-	-
-	1-1/8 "	R4133716	R4133717	R4166926	NR	-	-	-	-
-	1-1/8 "	R4133714	R4133715	R4166926	NR	-	-	-	-
-	1-1/8 "	R4133714	R4133715	R4166926	NR	-	-	-	-
-	1-1/8 "	R4133716	R4133717	R4166926	NR	-	-	-	-
-	1-1/8 "	R4133719	R4133718	R4166926	NR	N/A[358]	R4122688	-	-
-	1-1/8 "	R4133714	R4133715	R4166926	NR	N/A[358]	R4122688	-	-
23-122700-002[9]	2-1/2 "	R424244X	R424244X[37]	60050266	69270757[41]	-	-	-	-
23-122691-002[188]	2-7/8 "	60050145X	60050145X[37]	60050146	69270702[41]	-	-	-	-
23-122703-002[186]	2-7/8 "	60050145X	60050145X[37]	60050146	69270702[41]	-	-	-	-
-	1-1/4 "	R4133581	R4133581	R4166923	NR	-	-	-	-
-	1-1/4 "	R4133720	R4133721	R4166923	NR	-	-	-	-
-	1-1/4 "	R4133720	R4133721	R4166923	NR	-	-	-	-
-	1-1/4 "	R4133581	R4133582	R4166923	NR	-	-	-	-
-	1-1/2 "	R4033607	R4033607	R4166818	NR	-	-	-	-
-	1-1/2 "	R4033607	R4033607	R4166818	NR	-	-	-	-
-	1-5/8 "	R4133606	R4133606	R415193	NR	-	-	-	-
-	1-5/8 "	R4133338	R4133338	R4166689	NR	-	-	-	-
-	1-5/8 "	R4133338	R4133338	R4166689	NR	-	-	-	-
-	1-5/8 "	R4133338	R4133338	R4166689	NR	-	-	-	-
-	1-5/8 "	R4133338	R4133338	R4166689	NR	-	-	-	-
-	1-3/4 "	R4133400	R4133400	R4166917	NR	-	-	-	-
-	1-3/4 "	R4133400	R4133400	R4166917	NR	-	-	-	-
-	1.09375	R4133484	R4133485	R4166819	NR	-	-	-	-
-	1.09375	R4133484	R4133485	R4166819	NR	-	-	-	-
23-122700-002[9]	2-1/2 "	R424244X	R424244X[37]	60050266	69270757[41]	-	-	-	-
23-122691-002[42]	2-7/8 "	60050145X	60050145X[37]	60050146	69270702[41]	-	-	-	-
23-122703-002[186]	2-7/8 "	60050145X	60050145X[37]	60050146	69270702[41]	-	-	-	-
-	1-1/2 "	R4033607	R4033607	R4166818	NR	-	-	-	-
-	1-1/2 "	R4033607	R4033607	R4166818	NR	-	-	-	-
-	1-5/8 "	R4133606	R4133606	R415193	NR	-	-	-	-
-	1-5/8 "	R4133338	R4133338	R4166689	NR	-	-	-	-
-	1-5/8 "	R4133338	R4133338	R4166689	NR	-	-	-	-
-	1-5/8 "	R4133338	R4133338	R4166689	NR	-	-	-	-
-	1-5/8 "	R4133338	R4133338	R4166689	NR	-	-	-	-
-	1-3/4 "	R4133400	R4133400	R4166917	NR	-	-	-	-
-	1-3/4 "	R4133400	R4133400	R4166917	NR	-	-	-	-
-	1-1/8 "	R4133714	R4133715	R4166926	NR	-	-	-	-
-	1-1/8 "	R4133714	R4133715	R4166926	NR	-	-	-	-
-	1-1/8 "	R4133716	R4133717	R4166926	NR	-	-	-	-
-	1-1/8 "	R4133716	R4133717	R4166926	NR	-	-	-	-
-	1-1/8 "	R4133719	R4133718	R4166926	NR	N/A[358]	R4122688	-	-

MAKE MODEL YEAR AXLE CODE AXLE WEIGHT	AXLE & BRK. TYPE	BRK. MFG.	BRAKE SIZE	FMSI	MERITOR DISC PAD OR BRAKE SHOE	MERITOR GUIDE PIN OR RETURN SPRING KIT	MERITOR CALIPER HWD. KIT OR RETURN SPRING KIT	MERITOR ADJUSTER KIT (LEFT WHEEL)	MERITOR ADJUSTER KIT (RIGHT WHEEL)
FORD(Cont.)									
F800 SERIES: CONVENTIONAL(Cont.)									
1976									
	Fa	WG	15 " x 3 "	1245C - 321	R700321	R40H521	R40H9237	R40H3502	R40H3503
	Fa	WG	15 " x 3 "	1245C - 321	R700321	R40H521	R40H9237	R40H3502	R40H3503
	Fa	WG	15 " x 3 "	1245C - 321	R700321	R40H521	R40H9237	R40H3502	R40H3503
Split System									
F090, F120	Fa	WG	15 " x 3 "	1245C - 321	R700321	R40H521	R40H9237	R40H3502	R40H3503
	Fa	WG	15 " x 3 "	1245C - 321	R700321	R40H521	R40H9237	R40H3502	R40H3503
	Fa	WG	15 " x 3 "	1245C - 321	R700321	R40H521	R40H9237	R40H3502	R40H3503
	Fa	WG	15 " x 3 "	1245C - 321	R700321	R40H521	R40H9237	R40H3502	R40H3503
1975									
F050, F055, F060	Fa	KH	14 " x 2-1/2 "	2060 - 361	Discontinued	R40H596	R40H9219	R40H3536	R40H3537
	Fa	KH	14 " x 2-1/2 "	2060 - 361	Discontinued	R40H596	R40H9219	R40H3536	R40H3537
F070	Fd	DN		7141 - D224	MD224[340]	69310693	60050153	NR	NR
F080, F090	Fd	DN		7149 - D236	MD236[341]	69310693	R40H5523	NR	NR
	Fd	DN		7149 - D236	MD236[341]	69310693	R40H5523	NR	NR
R170, R175	Ra	KH	15 " x 5 "	4646 - 400	R700400	R40H595	R40H9220	R40H3538	R40H3539
	Ra	KH	15 " x 5 "	4646 - 400	R700400	R40H595	R40H9220	R40H3538	R40H3539
	Ra	KH	15 " x 5 "	4646 - 400	R700400	R40H595	R40H9220	R40H3538	R40H3539
	Ra	WG	15 " x 5 "	1252 - 346	R700346	R40H597	R40H9200	R40H3540	R40H3541
	Ra	WG	15 " x 5 "	1252 - 346	R700346	R40H597	R40H9200	R40H3540	R40H3541
R185	Ra	WG	15 " x 6 "	4596 - 381	R700381	R40H597	R40H9200	R40H3540	R40H3541
	Ra	WG	15 " x 6 "	4596 - 381	R700381	R40H597	R40H9200	R40H3540	R40H3541
	Ra	WG	15 " x 7 "	4597 - 383	R700383	R40H597	R40H9200	R40H3540	R40H3541
	Ra	WG	15 " x 7 "	4597 - 383	R700383	R40H597	R40H9200	R40H3540	R40H3541
Single System									
F070	Fa	WG	15 " x 3 "	1245C - 321	R700321	R40H521	R40H9237	R40H3502	R40H3503
	Fa	WG	15 " x 3 "	1245C - 321	R700321	R40H521	R40H9237	R40H3502	R40H3503
	Fa	WG	15 " x 3 "	1245C - 321	R700321	R40H521	R40H9237	R40H3502	R40H3503
	Fa	WG	15 " x 3 "	1245C - 321	R700321	R40H521	R40H9237	R40H3502	R40H3503
Split System									
F070	Fa	WG	15 " x 3 "	1245C - 321	R700321	R40H521	R40H9237	R40H3502	R40H3503
	Fa	WG	15 " x 3 "	1245C - 321	R700321	R40H521	R40H9237	R40H3502	R40H3503
	Fa	WG	15 " x 3 "	1245C - 321	R700321	R40H521	R40H9237	R40H3502	R40H3503
	Fa	WG	15 " x 3 "	1245C - 321	R700321	R40H521	R40H9237	R40H3502	R40H3503
Split System									
F090, F120	Fa	WG	15 " x 3 "	1245C - 321	R700321	R40H521	R40H9237	R40H3502	R40H3503
	Fa	WG	15 " x 3 "	1245C - 321	R700321	R40H521	R40H9237	R40H3502	R40H3503
	Fa	WG	15 " x 3 "	1245C - 321	R700321	R40H521	R40H9237	R40H3502	R40H3503
	Fa	WG	15 " x 3 "	1245C - 321	R700321	R40H521	R40H9237	R40H3502	R40H3503
1974									
F050, F055, F060	Fa	KH	14 " x 2-1/2 "	2060 - 361	Discontinued	R40H596	R40H9219	R40H3536	R40H3537
	Fa	KH	14 " x 2-1/2 "	2060 - 361	Discontinued	R40H596	R40H9219	R40H3536	R40H3537
F070	Fd	DN		7141 - D224	MD224[340]	69310693	60050153	NR	NR
F080, F090	Fd	DN		7149 - D236	MD236[341]	69310693	R40H5523	NR	NR
	Fd	DN		7149 - D236	MD236[341]	69310693	R40H5523	NR	NR
R170, R175	Ra	KH	15 " x 5 "	4646 - 400	R700400	R40H595	R40H9220	R40H3538	R40H3539
	Ra	KH	15 " x 5 "	4646 - 400	R700400	R40H595	R40H9220	R40H3538	R40H3539
	Ra	KH	15 " x 5 "	4646 - 400	R700400	R40H595	R40H9220	R40H3538	R40H3539
	Ra	WG	15 " x 5 "	1252 - 346	R700346	R40H597	R40H9200	R40H3540	R40H3541
	Ra	WG	15 " x 5 "	1252 - 346	R700346	R40H597	R40H9200	R40H3540	R40H3541
R185	Ra	WG	15 " x 6 "	4596 - 381	R700381	R40H597	R40H9200	R40H3540	R40H3541
	Ra	WG	15 " x 6 "	4596 - 381	R700381	R40H597	R40H9200	R40H3540	R40H3541
	Ra	WG	15 " x 7 "	4597 - 383	R700383	R40H597	R40H9200	R40H3540	R40H3541
	Ra	WG	15 " x 7 "	4597 - 383	R700383	R40H597	R40H9200	R40H3540	R40H3541
Single System									
F070	Fa	WG	15 " x 3 "	1245C - 321	R700321	R40H521	R40H9237	R40H3502	R40H3503
	Fa	WG	15 " x 3 "	1245C - 321	R700321	R40H521	R40H9237	R40H3502	R40H3503
	Fa	WG	15 " x 3 "	1245C - 321	R700321	R40H521	R40H9237	R40H3502	R40H3503
	Fa	WG	15 " x 3 "	1245C - 321	R700321	R40H521	R40H9237	R40H3502	R40H3503
Split System									
F070	Fa	WG	15 " x 3 "	1245C - 321	R700321	R40H521	R40H9237	R40H3502	R40H3503
	Fa	WG	15 " x 3 "	1245C - 321	R700321	R40H521	R40H9237	R40H3502	R40H3503
	Fa	WG	15 " x 3 "	1245C - 321	R700321	R40H521	R40H9237	R40H3502	R40H3503
	Fa	WG	15 " x 3 "	1245C - 321	R700321	R40H521	R40H9237	R40H3502	R40H3503
Split System									
F090, F120	Fa	WG	15 " x 3 "	1245C - 321	R700321	R40H521	R40H9237	R40H3502	R40H3503

9 - 6 Stud, Dayton Rotor, Hat Style
42 - 6 Stud, Dayton Rotor, "U" Style
341 - Use 69160445 for Disc Pad Retainer Clip
37 - Also available as a New unit
186 - 10 Stud
358 - Split System
41 - Aluminum piston
340 - Use 69160457 for Disc Pad Retainer Clip

MERITOR DRUM OR ROTOR NO.	CALIPER OR CYLINDER BORE SIZE	MERITOR CALIPER OR WHEEL CYLINDER (LEFT)	MERITOR CALIPER OR WHEEL CYLINDER (RIGHT)	MERITOR CALIPER OR WHEEL CYLINDER REPAIR KIT	MERITOR CALIPER PISTON	MERITOR MASTER CYLINDER	MERITOR MASTER CYLINDER KIT	MERITOR BRAKE HOSE (LEFT)	MERITOR BRAKE HOSE (RIGHT)
									FORD(Cont.)
									F800 SERIES: CONVENTIONAL(Cont.)
-	1-1/8 "	R4133714	R4133715	R4166926	NR	N/A[358]	R4122688	-	-
-	1-1/8 "	R4133719	R4133718	R4166926	NR	N/A[358]	R4122688	-	-
-	1-1/8 "	R4133714	R4133715	R4166926	NR	N/A[358]	R4122688	-	-
-	1-1/4 "	R4133581	R4133581	R4166923	NR	-	-	-	-
-	1-1/4 "	R4133720	R4133721	R4166923	NR	-	-	-	-
-	1-1/4 "	R4133720	R4133721	R4166923	NR	-	-	-	-
-	1-1/4 "	R4133581	R4133582	R4166923	NR	-	-	-	-
-	1.09375	R4133484	R4133485	R4166819	NR	-	-	-	-
-	1.09375	R4133484	R4133485	R4166819	NR	-	-	-	-
23-122700-002[9]	2-1/2 "	R424244X	R424244X[37]	60050266	69270757[41]	-	-	-	-
23-122691-002[42]	2-7/8 "	60050145X	60050145X[37]	60050146	69270702[41]	-	-	-	-
23-122703-002[186]	2-7/8 "	60050145X	60050145X[37]	60050146	69270702[41]	-	-	-	-
-	1-5/8 "	R4133606	R4133606	R415193	NR	-	-	-	-
-	1-1/2 "	R4033607	R4033607	R4166818	NR	-	-	-	-
-	1-1/2 "	R4033607	R4033607	R4166818	NR	-	-	-	-
-	1-5/8 "	R4133338	R4133338	R4166689	NR	-	-	-	-
-	1-5/8 "	R4133338	R4133338	R4166689	NR	-	-	-	-
-	1-5/8 "	R4133338	R4133338	R4166689	NR	-	-	-	-
-	1-5/8 "	R4133338	R4133338	R4166689	NR	-	-	-	-
-	1-3/4 "	R4133400	R4133400	R4166917	NR	-	-	-	-
-	1-3/4 "	R4133400	R4133400	R4166917	NR	-	-	-	-
-	1-1/8 "	R4133716	R4133717	R4166926	NR	-	-	-	-
-	1-1/8 "	R4133714	R4133715	R4166926	NR	-	-	-	-
-	1-1/8 "	R4133714	R4133715	R4166926	NR	-	-	-	-
-	1-1/8 "	R4133716	R4133717	R4166926	NR	-	-	-	-
-	1-1/8 "	R4133714	R4133715	R4166926	NR	N/A[358]	R4122688	-	-
-	1-1/8 "	R4133719	R4133718	R4166926	NR	N/A[358]	R4122688	-	-
-	1-1/8 "	R4133719	R4133718	R4166926	NR	N/A[358]	R4122688	-	-
-	1-1/8 "	R4133714	R4133715	R4166926	NR	N/A[358]	R4122688	-	-
-	1-1/4 "	R4133581	R4133582	R4166923	NR	-	-	-	-
-	1-1/4 "	R4133720	R4133721	R4166923	NR	-	-	-	-
-	1-1/4 "	R4133720	R4133721	R4166923	NR	-	-	-	-
-	1-1/4 "	R4133581	R4133581	R4166923	NR	-	-	-	-
-	1.09375	R4133484	R4133485	R4166819	NR	-	-	-	-
-	1.09375	R4133484	R4133485	R4166819	NR	-	-	-	-
23-122700-002[9]	2-1/2 "	R424244X	R424244X[37]	60050266	69270757[41]	-	-	-	-
23-122691-002[42]	2-7/8 "	60050145X	60050145X[37]	60050146	69270702[41]	-	-	-	-
23-122703-002[186]	2-7/8 "	60050145X	60050145X[37]	60050146	69270702[41]	-	-	-	-
-	1-1/2 "	R4033607	R4033607	R4166818	NR	-	-	-	-
-	1-1/2 "	R4033607	R4033607	R4166818	NR	-	-	-	-
-	1-5/8 "	R4133606	R4133606	R415193	NR	-	-	-	-
-	1-5/8 "	R4133338	R4133338	R4166689	NR	-	-	-	-
-	1-5/8 "	R4133338	R4133338	R4166689	NR	-	-	-	-
-	1-5/8 "	R4133338	R4133338	R4166689	NR	-	-	-	-
-	1-5/8 "	R4133338	R4133338	R4166689	NR	-	-	-	-
-	1-3/4 "	R4133400	R4133400	R4166917	NR	-	-	-	-
-	1-3/4 "	R4133400	R4133400	R4166917	NR	-	-	-	-
-	1-1/8 "	R4133716	R4133717	R4166926	NR	-	-	-	-
-	1-1/8 "	R4133714	R4133715	R4166926	NR	-	-	-	-
-	1-1/8 "	R4133714	R4133715	R4166926	NR	-	-	-	-
-	1-1/8 "	R4133716	R4133717	R4166926	NR	-	-	-	-
-	1-1/8 "	R4133719	R4133718	R4166926	NR	N/A[358]	R4122688	-	-
-	1-1/8 "	R4133714	R4133715	R4166926	NR	N/A[358]	R4122688	-	-
-	1-1/8 "	R4133714	R4133715	R4166926	NR	N/A[358]	R4122688	-	-
-	1-1/8 "	R4133719	R4133718	R4166926	NR	N/A[358]	R4122688	-	-
-	1-1/4 "	R4133720	R4133721	R4166923	NR	-	-	-	-

MAKE MODEL YEAR AXLE CODE AXLE WEIGHT	AXLE & BRK. TYPE	BRK. MFG.	BRAKE SIZE	FMSI	MERITOR DISC PAD OR BRAKE SHOE	MERITOR GUIDE PIN OR RETURN SPRING KIT	MERITOR CALIPER HWD. KIT OR RETURN SPRING KIT	MERITOR ADJUSTER KIT (LEFT WHEEL)	MERITOR ADJUSTER KIT (RIGHT WHEEL)
FORD(Cont.)									
F800 SERIES: CONVENTIONAL(Cont.)									
1974									
	Fa	WG	15 " x 3 "	1245C - 321	R700321	R40H521	R40H9237	R40H3502	R40H3503
	Fa	WG	15 " x 3 "	1245C - 321	R700321	R40H521	R40H9237	R40H3502	R40H3503
	Fa	WG	15 " x 3 "	1245C - 321	R700321	R40H521	R40H9237	R40H3502	R40H3503
1973									
F050, F055, F060	Fa	KH	14 " x 2-1/2 "	2060 - 361	Discontinued	R40H596	R40H9219	R40H3536	R40H3537
	Fa	KH	14 " x 2-1/2 "	2060 - 361	Discontinued	R40H596	R40H9219	R40H3536	R40H3537
F070	Fd	DN		7141 - D224	MD224[340]	69310693	60050153	NR	NR
F080, F090	Fd	DN		7149 - D236	MD236[341]	69310693	R40H5523	NR	NR
	Fd	DN		7149 - D236	MD236[341]	69310693	R40H5523	NR	NR
R170, R175	Ra	KH	15 " x 5 "	4646 - 400	R700400	R40H595	R40H9220	R40H3538	R40H3539
	Ra	KH	15 " x 5 "	4646 - 400	R700400	R40H595	R40H9220	R40H3538	R40H3539
	Ra	KH	15 " x 5 "	4646 - 400	R700400	R40H595	R40H9220	R40H3538	R40H3539
	Ra	WG	15 " x 5 "	1252 - 346	R700346	R40H597	R40H9200	R40H3540	R40H3541
	Ra	WG	15 " x 5 "	1252 - 346	R700346	R40H597	R40H9200	R40H3540	R40H3541
R185	Ra	WG	15 " x 6 "	4596 - 381	R700381	R40H597	R40H9200	R40H3540	R40H3541
	Ra	WG	15 " x 6 "	4596 - 381	R700381	R40H597	R40H9200	R40H3540	R40H3541
	Ra	WG	15 " x 7 "	4597 - 383	R700383	R40H597	R40H9200	R40H3540	R40H3541
	Ra	WG	15 " x 7 "	4597 - 383	R700383	R40H597	R40H9200	R40H3540	R40H3541
Single System									
F070	Fa	WG	15 " x 3 "	1245C - 321	R700321	R40H521	R40H9237	R40H3502	R40H3503
	Fa	WG	15 " x 3 "	1245C - 321	R700321	R40H521	R40H9237	R40H3502	R40H3503
	Fa	WG	15 " x 3 "	1245C - 321	R700321	R40H521	R40H9237	R40H3502	R40H3503
	Fa	WG	15 " x 3 "	1245C - 321	R700321	R40H521	R40H9237	R40H3502	R40H3503
Split System									
F070	Fa	WG	15 " x 3 "	1245C - 321	R700321	R40H521	R40H9237	R40H3502	R40H3503
	Fa	WG	15 " x 3 "	1245C - 321	R700321	R40H521	R40H9237	R40H3502	R40H3503
	Fa	WG	15 " x 3 "	1245C - 321	R700321	R40H521	R40H9237	R40H3502	R40H3503
	Fa	WG	15 " x 3 "	1245C - 321	R700321	R40H521	R40H9237	R40H3502	R40H3503
Split System									
F090, F120	Fa	WG	15 " x 3 "	1245C - 321	R700321	R40H521	R40H9237	R40H3502	R40H3503
	Fa	WG	15 " x 3 "	1245C - 321	R700321	R40H521	R40H9237	R40H3502	R40H3503
	Fa	WG	15 " x 3 "	1245C - 321	R700321	R40H521	R40H9237	R40H3502	R40H3503
	Fa	WG	15 " x 3 "	1245C - 321	R700321	R40H521	R40H9237	R40H3502	R40H3503
1972									
F050, F055, F060	Fa	KH	14 " x 2-1/2 "	2060 - 361	Discontinued	R40H596	R40H9219	R40H3536	R40H3537
	Fa	KH	14 " x 2-1/2 "	2060 - 361	Discontinued	R40H596	R40H9219	R40H3536	R40H3537
F070	Fd	DN		7141 - D224	MD224[340]	69310693	60050153	NR	NR
F080, F090	Fd	DN		7149 - D236	MD236[341]	69310693	R40H5523	NR	NR
	Fd	DN		7149 - D236	MD236[341]	69310693	R40H5523	NR	NR
R170, R175	Ra	KH	15 " x 5 "	4646 - 400	R700400	R40H595	R40H9220	R40H3538	R40H3539
	Ra	KH	15 " x 5 "	4646 - 400	R700400	R40H595	R40H9220	R40H3538	R40H3539
	Ra	KH	15 " x 5 "	4646 - 400	R700400	R40H595	R40H9220	R40H3538	R40H3539
	Ra	WG	15 " x 5 "	1252 - 346	R700346	R40H597	R40H9200	R40H3540	R40H3541
	Ra	WG	15 " x 5 "	1252 - 346	R700346	R40H597	R40H9200	R40H3540	R40H3541
R185	Ra	WG	15 " x 6 "	4596 - 381	R700381	R40H597	R40H9200	R40H3540	R40H3541
	Ra	WG	15 " x 6 "	4596 - 381	R700381	R40H597	R40H9200	R40H3540	R40H3541
	Ra	WG	15 " x 7 "	4597 - 383	R700383	R40H597	R40H9200	R40H3540	R40H3541
	Ra	WG	15 " x 7 "	4597 - 383	R700383	R40H597	R40H9200	R40H3540	R40H3541
Single System									
F070	Fa	WG	15 " x 3 "	1245C - 321	R700321	R40H521	R40H9237	R40H3502	R40H3503
	Fa	WG	15 " x 3 "	1245C - 321	R700321	R40H521	R40H9237	R40H3502	R40H3503
	Fa	WG	15 " x 3 "	1245C - 321	R700321	R40H521	R40H9237	R40H3502	R40H3503
	Fa	WG	15 " x 3 "	1245C - 321	R700321	R40H521	R40H9237	R40H3502	R40H3503
Split System									
F070	Fa	WG	15 " x 3 "	1245C - 321	R700321	R40H521	R40H9237	R40H3502	R40H3503
	Fa	WG	15 " x 3 "	1245C - 321	R700321	R40H521	R40H9237	R40H3502	R40H3503
	Fa	WG	15 " x 3 "	1245C - 321	R700321	R40H521	R40H9237	R40H3502	R40H3503
	Fa	WG	15 " x 3 "	1245C - 321	R700321	R40H521	R40H9237	R40H3502	R40H3503
Split System									
F090, F120	Fa	WG	15 " x 3 "	1245C - 321	R700321	R40H521	R40H9237	R40H3502	R40H3503
	Fa	WG	15 " x 3 "	1245C - 321	R700321	R40H521	R40H9237	R40H3502	R40H3503
	Fa	WG	15 " x 3 "	1245C - 321	R700321	R40H521	R40H9237	R40H3502	R40H3503
	Fa	WG	15 " x 3 "	1245C - 321	R700321	R40H521	R40H9237	R40H3502	R40H3503
1971									
F050, F055, F060	Fa	KH	14 " x 2-1/2 "	2060 - 361	Discontinued	R40H596	R40H9219	R40H3536	R40H3537

9 - 6 Stud, Dayton Rotor, Hat Style
42 - 6 Stud, Dayton Rotor, "U" Style
341 - Use 69160445 for Disc Pad Retainer Clip
37 - Also available as a New unit
186 - 10 Stud
358 - Split System
41 - Aluminum piston
340 - Use 69160457 for Disc Pad Retainer Clip

MERITOR DRUM OR ROTOR NO.	CALIPER OR CYLINDER BORE SIZE	MERITOR CALIPER OR WHEEL CYLINDER (LEFT)	MERITOR CALIPER OR WHEEL CYLINDER (RIGHT)	MERITOR CALIPER OR WHEEL CYLINDER REPAIR KIT	MERITOR CALIPER PISTON	MERITOR MASTER CYLINDER	MERITOR MASTER CYLINDER KIT	MERITOR BRAKE HOSE (LEFT)	MERITOR BRAKE HOSE (RIGHT)
									FORD(Cont.)
									F800 SERIES: CONVENTIONAL(Cont.)
-	1-1/4 "	R4133720	R4133721	R4166923	NR	-	-	-	-
-	1-1/4 "	R4133581	R4133582	R4166923	NR	-	-	-	-
-	1-1/4 "	R4133581	R4133581	R4166923	NR	-	-	-	-
-	1.09375	R4133484	R4133485	R4166819	NR	-	-	-	-
-	1.09375	R4133484	R4133485	R4166819	NR	-	-	-	-
23-122700-002[9]	2-1/2 "	R424244X	R424244X[37]	60050266	69270757[41]	-	-	-	-
23-122703-002[186]	2-7/8 "	60050145X	60050145X[37]	60050146	69270702[41]	-	-	-	-
23-122691-002[42]	2-7/8 "	60050145X	60050145X[37]	60050146	69270702[41]	-	-	-	-
-	1-5/8 "	R4133606	R4133606	R415193	NR	-	-	-	-
-	1-1/2 "	R4033607	R4033607	R4166818	NR	-	-	-	-
-	1-1/2 "	R4033607	R4033607	R4166818	NR	-	-	-	-
-	1-5/8 "	R4133338	R4133338	R4166689	NR	-	-	-	-
-	1-5/8 "	R4133338	R4133338	R4166689	NR	-	-	-	-
-	1-5/8 "	R4133338	R4133338	R4166689	NR	-	-	-	-
-	1-5/8 "	R4133338	R4133338	R4166689	NR	-	-	-	-
-	1-3/4 "	R4133400	R4133400	R4166917	NR	-	-	-	-
-	1-3/4 "	R4133400	R4133400	R4166917	NR	-	-	-	-
-	1-1/8 "	R4133716	R4133717	R4166926	NR	-	-	-	-
-	1-1/8 "	R4133714	R4133715	R4166926	NR	-	-	-	-
-	1-1/8 "	R4133716	R4133717	R4166926	NR	-	-	-	-
-	1-1/8 "	R4133714	R4133715	R4166926	NR	-	-	-	-
-	1-1/8 "	R4133719	R4133718	R4166926	NR	N/A[358]	R4122688	-	-
-	1-1/8 "	R4133714	R4133715	R4166926	NR	N/A[358]	R4122688	-	-
-	1-1/8 "	R4133719	R4133718	R4166926	NR	N/A[358]	R4122688	-	-
-	1-1/8 "	R4133714	R4133715	R4166926	NR	N/A[358]	R4122688	-	-
-	1-1/4 "	R4133581	R4133581	R4166923	NR	-	-	-	-
-	1-1/4 "	R4133720	R4133721	R4166923	NR	-	-	-	-
-	1-1/4 "	R4133581	R4133582	R4166923	NR	-	-	-	-
-	1-1/4 "	R4133720	R4133721	R4166923	NR	-	-	-	-
-	1.09375	R4133484	R4133485	R4166819	NR	-	-	-	-
-	1.09375	R4133484	R4133485	R4166819	NR	-	-	-	-
23-122700-002[9]	2-1/2 "	R424244X	R424244X[37]	60050266	69270757[41]	-	-	-	-
23-122703-002[186]	2-7/8 "	60050145X	60050145X[37]	60050146	69270702[41]	-	-	-	-
23-122691-002[42]	2-7/8 "	60050145X	60050145X[37]	60050146	69270702[41]	-	-	-	-
-	1-5/8 "	R4133606	R4133606	R415193	NR	-	-	-	-
-	1-1/2 "	R4033607	R4033607	R4166818	NR	-	-	-	-
-	1-1/2 "	R4033607	R4033607	R4166818	NR	-	-	-	-
-	1-5/8 "	R4133338	R4133338	R4166689	NR	-	-	-	-
-	1-5/8 "	R4133338	R4133338	R4166689	NR	-	-	-	-
-	1-5/8 "	R4133338	R4133338	R4166689	NR	-	-	-	-
-	1-5/8 "	R4133338	R4133338	R4166689	NR	-	-	-	-
-	1-3/4 "	R4133400	R4133400	R4166917	NR	-	-	-	-
-	1-3/4 "	R4133400	R4133400	R4166917	NR	-	-	-	-
-	1-1/8 "	R4133714	R4133715	R4166926	NR	-	-	-	-
-	1-1/8 "	R4133716	R4133717	R4166926	NR	-	-	-	-
-	1-1/8 "	R4133714	R4133715	R4166926	NR	-	-	-	-
-	1-1/8 "	R4133716	R4133717	R4166926	NR	-	-	-	-
-	1-1/8 "	R4133719	R4133718	R4166926	NR	N/A[358]	R4122688	-	-
-	1-1/8 "	R4133719	R4133718	R4166926	NR	N/A[358]	R4122688	-	-
-	1-1/8 "	R4133714	R4133715	R4166926	NR	N/A[358]	R4122688	-	-
-	1-1/8 "	R4133714	R4133715	R4166926	NR	N/A[358]	R4122688	-	-
-	1-1/4 "	R4133720	R4133721	R4166923	NR	-	-	-	-
-	1-1/4 "	R4133581	R4133582	R4166923	NR	-	-	-	-
-	1-1/4 "	R4133720	R4133721	R4166923	NR	-	-	-	-
-	1-1/4 "	R4133581	R4133581	R4166923	NR	-	-	-	-
-	1.09375	R4133484	R4133485	R4166819	NR	-	-	-	-

MAKE MODEL YEAR AXLE CODE AXLE WEIGHT	AXLE & BRK. TYPE	BRK. MFG.	BRAKE SIZE	FMSI	MERITOR DISC PAD OR BRAKE SHOE	MERITOR GUIDE PIN OR RETURN SPRING KIT	MERITOR CALIPER HWD. KIT OR RETURN SPRING KIT	MERITOR ADJUSTER KIT (LEFT WHEEL)	MERITOR ADJUSTER KIT (RIGHT WHEEL)
FORD(Cont.)									
F800 SERIES: CONVENTIONAL(Cont.)									
1971									
F050, F055, F060	Fa	KH	14 " x 2-1/2 "	2060 - 361	Discontinued	R40H596	R40H9219	R40H3536	R40H3537
F070	Fd	DN		7141 - D224	MD224[340]	69310693	60050153	NR	NR
F080, F090	Fd	DN		7149 - D236	MD236[341]	69310693	R40H5523	NR	NR
	Fd	DN		7149 - D236	MD236[341]	69310693	R40H5523	NR	NR
R170, R175	Ra	KH	15 " x 5 "	4646 - 400	R700400	R40H595	R40H9220	R40H3538	R40H3539
	Ra	KH	15 " x 5 "	4646 - 400	R700400	R40H595	R40H9220	R40H3538	R40H3539
	Ra	KH	15 " x 5 "	4646 - 400	R700400	R40H595	R40H9220	R40H3538	R40H3539
	Ra	WG	15 " x 5 "	1252 - 346	R700346	R40H597	R40H9200	R40H3540	R40H3541
	Ra	WG	15 " x 5 "	1252 - 346	R700346	R40H597	R40H9200	R40H3540	R40H3541
R185	Ra	WG	15 " x 6 "	4596 - 381	R700381	R40H597	R40H9200	R40H3540	R40H3541
	Ra	WG	15 " x 6 "	4596 - 381	R700381	R40H597	R40H9200	R40H3540	R40H3541
	Ra	WG	15 " x 7 "	4597 - 383	R700383	R40H597	R40H9200	R40H3540	R40H3541
	Ra	WG	15 " x 7 "	4597 - 383	R700383	R40H597	R40H9200	R40H3540	R40H3541
Single System									
F070	Fa	WG	15 " x 3 "	1245C - 321	R700321	R40H521	R40H9237	R40H3502	R40H3503
	Fa	WG	15 " x 3 "	1245C - 321	R700321	R40H521	R40H9237	R40H3502	R40H3503
	Fa	WG	15 " x 3 "	1245C - 321	R700321	R40H521	R40H9237	R40H3502	R40H3503
	Fa	WG	15 " x 3 "	1245C - 321	R700321	R40H521	R40H9237	R40H3502	R40H3503
Split System									
F070	Fa	WG	15 " x 3 "	1245C - 321	R700321	R40H521	R40H9237	R40H3502	R40H3503
	Fa	WG	15 " x 3 "	1245C - 321	R700321	R40H521	R40H9237	R40H3502	R40H3503
	Fa	WG	15 " x 3 "	1245C - 321	R700321	R40H521	R40H9237	R40H3502	R40H3503
	Fa	WG	15 " x 3 "	1245C - 321	R700321	R40H521	R40H9237	R40H3502	R40H3503
Split System									
F090, F120	Fa	WG	15 " x 3 "	1245C - 321	R700321	R40H521	R40H9237	R40H3502	R40H3503
	Fa	WG	15 " x 3 "	1245C - 321	R700321	R40H521	R40H9237	R40H3502	R40H3503
	Fa	WG	15 " x 3 "	1245C - 321	R700321	R40H521	R40H9237	R40H3502	R40H3503
	Fa	WG	15 " x 3 "	1245C - 321	R700321	R40H521	R40H9237	R40H3502	R40H3503
1970									
F050, F055, F060	Fa	KH	14 " x 2-1/2 "	2060 - 361	Discontinued	R40H596	R40H9219	R40H3536	R40H3537
	Fa	KH	14 " x 2-1/2 "	2060 - 361	Discontinued	R40H596	R40H9219	R40H3536	R40H3537
F070	Fd	DN		7141 - D224	MD224[340]	69310693	60050153	NR	NR
F080, F090	Fd	DN		7149 - D236	MD236[341]	69310693	R40H5523	NR	NR
	Fd	DN		7149 - D236	MD236[341]	69310693	R40H5523	NR	NR
R170, R175	Ra	KH	15 " x 5 "	4646 - 400	R700400	R40H595	R40H9220	R40H3538	R40H3539
	Ra	KH	15 " x 5 "	4646 - 400	R700400	R40H595	R40H9220	R40H3538	R40H3539
	Ra	KH	15 " x 5 "	4646 - 400	R700400	R40H595	R40H9220	R40H3538	R40H3539
	Ra	WG	15 " x 5 "	1252 - 346	R700346	R40H597	R40H9200	R40H3540	R40H3541
	Ra	WG	15 " x 5 "	1252 - 346	R700346	R40H597	R40H9200	R40H3540	R40H3541
R185	Ra	WG	15 " x 6 "	4596 - 381	R700381	R40H597	R40H9200	R40H3540	R40H3541
	Ra	WG	15 " x 6 "	4596 - 381	R700381	R40H597	R40H9200	R40H3540	R40H3541
	Ra	WG	15 " x 7 "	4597 - 383	R700383	R40H597	R40H9200	R40H3540	R40H3541
	Ra	WG	15 " x 7 "	4597 - 383	R700383	R40H597	R40H9200	R40H3540	R40H3541
Single System									
F070	Fa	WG	15 " x 3 "	1245C - 321	R700321	R40H521	R40H9237	R40H3502	R40H3503
	Fa	WG	15 " x 3 "	1245C - 321	R700321	R40H521	R40H9237	R40H3502	R40H3503
	Fa	WG	15 " x 3 "	1245C - 321	R700321	R40H521	R40H9237	R40H3502	R40H3503
	Fa	WG	15 " x 3 "	1245C - 321	R700321	R40H521	R40H9237	R40H3502	R40H3503
Split System									
F070	Fa	WG	15 " x 3 "	1245C - 321	R700321	R40H521	R40H9237	R40H3502	R40H3503
	Fa	WG	15 " x 3 "	1245C - 321	R700321	R40H521	R40H9237	R40H3502	R40H3503
	Fa	WG	15 " x 3 "	1245C - 321	R700321	R40H521	R40H9237	R40H3502	R40H3503
	Fa	WG	15 " x 3 "	1245C - 321	R700321	R40H521	R40H9237	R40H3502	R40H3503
Split System									
F090, F120	Fa	WG	15 " x 3 "	1245C - 321	R700321	R40H521	R40H9237	R40H3502	R40H3503
	Fa	WG	15 " x 3 "	1245C - 321	R700321	R40H521	R40H9237	R40H3502	R40H3503
	Fa	WG	15 " x 3 "	1245C - 321	R700321	R40H521	R40H9237	R40H3502	R40H3503
	Fa	WG	15 " x 3 "	1245C - 321	R700321	R40H521	R40H9237	R40H3502	R40H3503
1969									
F050, F055, F060	Fa	KH	14 " x 2-1/2 "	2060 - 361	Discontinued	R40H596	R40H9219	R40H3536	R40H3537
	Fa	KH	14 " x 2-1/2 "	2060 - 361	Discontinued	R40H596	R40H9219	R40H3536	R40H3537
F070	Fd	DN		7141 - D224	MD224[340]	69310693	60050153	NR	NR
F080, F090	Fd	DN		7149 - D236	MD236[341]	69310693	R40H5523	NR	NR
	Fd	DN		7149 - D236	MD236[341]	69310693	R40H5523	NR	NR

9 - 6 Stud, Dayton Rotor, Hat Style
42 - 6 Stud, Dayton Rotor, "U" Style
341 - Use 69160445 for Disc Pad Retainer Clip
37 - Also available as a New unit
186 - 10 Stud
358 - Split System
41 - Aluminum piston
340 - Use 69160457 for Disc Pad Retainer Clip

MERITOR DRUM OR ROTOR NO.	CALIPER OR CYLINDER BORE SIZE	MERITOR CALIPER OR WHEEL CYLINDER (LEFT)	MERITOR CALIPER OR WHEEL CYLINDER (RIGHT)	MERITOR CALIPER OR WHEEL CYLINDER REPAIR KIT	MERITOR CALIPER PISTON	MERITOR MASTER CYLINDER	MERITOR MASTER CYLINDER KIT	MERITOR BRAKE HOSE (LEFT)	MERITOR BRAKE HOSE (RIGHT)
FORD(Cont.)									
F800 SERIES: CONVENTIONAL(Cont.)									
-	1.09375	R4133484	R4133485	R4166819	NR	-	-	-	-
23-122700-002[9]	2-1/2 "	R424244X	R424244X[37]	60050266	69270757[41]	-	-	-	-
23-122691-002[42]	2-7/8 "	60050145X	60050145X[37]	60050146	69270702[41]	-	-	-	-
23-122703-002[186]	2-7/8 "	60050145X	60050145X[37]	60050146	69270702[41]	-	-	-	-
-	1-1/2 "	R4033607	R4033607	R4166818	NR	-	-	-	-
-	1-5/8 "	R4133606	R4133606	R415193	NR	-	-	-	-
-	1-1/2 "	R4033607	R4033607	R4166818	NR	-	-	-	-
-	1-5/8 "	R4133338	R4133338	R4166689	NR	-	-	-	-
-	1-5/8 "	R4133338	R4133338	R4166689	NR	-	-	-	-
-	1-5/8 "	R4133338	R4133338	R4166689	NR	-	-	-	-
-	1-5/8 "	R4133338	R4133338	R4166689	NR	-	-	-	-
-	1-3/4 "	R4133400	R4133400	R4166917	NR	-	-	-	-
-	1-3/4 "	R4133400	R4133400	R4166917	NR	-	-	-	-
-	1-1/8 "	R4133716	R4133717	R4166926	NR	-	-	-	-
-	1-1/8 "	R4133714	R4133715	R4166926	NR	-	-	-	-
-	1-1/8 "	R4133714	R4133715	R4166926	NR	-	-	-	-
-	1-1/8 "	R4133716	R4133717	R4166926	NR	-	-	-	-
-	1-1/8 "	R4133719	R4133718	R4166926	NR	N/A[358]	R4122688	-	-
-	1-1/8 "	R4133714	R4133715	R4166926	NR	N/A[358]	R4122688	-	-
-	1-1/8 "	R4133719	R4133718	R4166926	NR	N/A[358]	R4122688	-	-
-	1-1/8 "	R4133714	R4133715	R4166926	NR	N/A[358]	R4122688	-	-
-	1-1/4 "	R4133581	R4133581	R4166923	NR	-	-	-	-
-	1-1/4 "	R4133720	R4133721	R4166923	NR	-	-	-	-
-	1-1/4 "	R4133720	R4133721	R4166923	NR	-	-	-	-
-	1-1/4 "	R4133581	R4133582	R4166923	NR	-	-	-	-
-	1.09375	R4133484	R4133485	R4166819	NR	-	-	-	-
-	1.09375	R4133484	R4133485	R4166819	NR	-	-	-	-
23-122700-002[9]	2-1/2 "	R424244X	R424244X[37]	60050266	69270757[41]	-	-	-	-
23-122691-002[42]	2-7/8 "	60050145X	60050145X[37]	60050146	69270702[41]	-	-	-	-
23-122703-002[186]	2-7/8 "	60050145X	60050145X[37]	60050146	69270702[41]	-	-	-	-
-	1-1/2 "	R4033607	R4033607	R4166818	NR	-	-	-	-
-	1-5/8 "	R4133606	R4133606	R415193	NR	-	-	-	-
-	1-1/2 "	R4033607	R4033607	R4166818	NR	-	-	-	-
-	1-5/8 "	R4133338	R4133338	R4166689	NR	-	-	-	-
-	1-5/8 "	R4133338	R4133338	R4166689	NR	-	-	-	-
-	1-5/8 "	R4133338	R4133338	R4166689	NR	-	-	-	-
-	1-5/8 "	R4133338	R4133338	R4166689	NR	-	-	-	-
-	1-3/4 "	R4133400	R4133400	R4166917	NR	-	-	-	-
-	1-3/4 "	R4133400	R4133400	R4166917	NR	-	-	-	-
-	1-1/8 "	R4133716	R4133717	R4166926	NR	-	-	-	-
-	1-1/8 "	R4133714	R4133715	R4166926	NR	-	-	-	-
-	1-1/8 "	R4133714	R4133715	R4166926	NR	-	-	-	-
-	1-1/8 "	R4133716	R4133717	R4166926	NR	-	-	-	-
-	1-1/8 "	R4133714	R4133715	R4166926	NR	N/A[358]	R4122688	-	-
-	1-1/8 "	R4133719	R4133718	R4166926	NR	N/A[358]	R4122688	-	-
-	1-1/8 "	R4133714	R4133715	R4166926	NR	N/A[358]	R4122688	-	-
-	1-1/8 "	R4133719	R4133718	R4166926	NR	N/A[358]	R4122688	-	-
-	1-1/4 "	R4133720	R4133721	R4166923	NR	-	-	-	-
-	1-1/4 "	R4133581	R4133581	R4166923	NR	-	-	-	-
-	1-1/4 "	R4133720	R4133721	R4166923	NR	-	-	-	-
-	1-1/4 "	R4133581	R4133582	R4166923	NR	-	-	-	-
-	1.09375	R4133484	R4133485	R4166819	NR	-	-	-	-
-	1.09375	R4133484	R4133485	R4166819	NR	-	-	-	-
23-122700-002[9]	2-1/2 "	R424244X	R424244X[37]	60050266	69270757[41]	-	-	-	-
23-122691-002[42]	2-7/8 "	60050145X	60050145X[37]	60050146	69270702[41]	-	-	-	-
23-122703-002[186]	2-7/8 "	60050145X	60050145X[37]	60050146	69270702[41]	-	-	-	-

MAKE MODEL YEAR AXLE CODE AXLE WEIGHT	AXLE & BRK. TYPE	BRK. MFG.	BRAKE SIZE	FMSI	MERITOR DISC PAD OR BRAKE SHOE	MERITOR GUIDE PIN OR RETURN SPRING KIT	MERITOR CALIPER HWD. KIT OR RETURN SPRING KIT	MERITOR ADJUSTER KIT (LEFT WHEEL)	MERITOR ADJUSTER KIT (RIGHT WHEEL)
FORD(Cont.)									
F800 SERIES: CONVENTIONAL(Cont.)									
1969									
R170, R175	Ra	KH	15 " x 5 "	4646 - 400	R700400	R40H595	R40H9220	R40H3538	R40H3539
	Ra	KH	15 " x 5 "	4646 - 400	R700400	R40H595	R40H9220	R40H3538	R40H3539
	Ra	KH	15 " x 5 "	4646 - 400	R700400	R40H595	R40H9220	R40H3538	R40H3539
	Ra	WG	15 " x 5 "	1252 - 346	R700346	R40H597	R40H9200	R40H3540	R40H3541
	Ra	WG	15 " x 5 "	1252 - 346	R700346	R40H597	R40H9200	R40H3540	R40H3541
R185	Ra	WG	15 " x 6 "	4596 - 381	R700381	R40H597	R40H9200	R40H3540	R40H3541
	Ra	WG	15 " x 6 "	4596 - 381	R700381	R40H597	R40H9200	R40H3540	R40H3541
	Ra	WG	15 " x 7 "	4597 - 383	R700383	R40H597	R40H9200	R40H3540	R40H3541
	Ra	WG	15 " x 7 "	4597 - 383	R700383	R40H597	R40H9200	R40H3540	R40H3541
Single System									
F070	Fa	WG	15 " x 3 "	1245C - 321	R700321	R40H521	R40H9237	R40H3502	R40H3503
	Fa	WG	15 " x 3 "	1245C - 321	R700321	R40H521	R40H9237	R40H3502	R40H3503
	Fa	WG	15 " x 3 "	1245C - 321	R700321	R40H521	R40H9237	R40H3502	R40H3503
	Fa	WG	15 " x 3 "	1245C - 321	R700321	R40H521	R40H9237	R40H3502	R40H3503
Split System									
F070	Fa	WG	15 " x 3 "	1245C - 321	R700321	R40H521	R40H9237	R40H3502	R40H3503
	Fa	WG	15 " x 3 "	1245C - 321	R700321	R40H521	R40H9237	R40H3502	R40H3503
	Fa	WG	15 " x 3 "	1245C - 321	R700321	R40H521	R40H9237	R40H3502	R40H3503
	Fa	WG	15 " x 3 "	1245C - 321	R700321	R40H521	R40H9237	R40H3502	R40H3503
Split System									
F090, F120	Fa	WG	15 " x 3 "	1245C - 321	R700321	R40H521	R40H9237	R40H3502	R40H3503
	Fa	WG	15 " x 3 "	1245C - 321	R700321	R40H521	R40H9237	R40H3502	R40H3503
	Fa	WG	15 " x 3 "	1245C - 321	R700321	R40H521	R40H9237	R40H3502	R40H3503
	Fa	WG	15 " x 3 "	1245C - 321	R700321	R40H521	R40H9237	R40H3502	R40H3503
1968									
F050, F055, F060	Fa	KH	14 " x 2-1/2 "	2060 - 361	Discontinued	R40H596	R40H9219	R40H3536	R40H3537
	Fa	KH	14 " x 2-1/2 "	2060 - 361	Discontinued	R40H596	R40H9219	R40H3536	R40H3537
F070	Fd	DN		7141 - D224	MD224[340]	69310693	60050153	NR	NR
F080, F090	Fd	DN		7149 - D236	MD236[341]	69310693	R40H5523	NR	NR
	Fd	DN		7149 - D236	MD236[341]	69310693	R40H5523	NR	NR
R170, R175	Ra	KH	15 " x 5 "	4646 - 400	R700400	R40H595	R40H9220	R40H3538	R40H3539
	Ra	KH	15 " x 5 "	4646 - 400	R700400	R40H595	R40H9220	R40H3538	R40H3539
	Ra	KH	15 " x 5 "	4646 - 400	R700400	R40H595	R40H9220	R40H3538	R40H3539
	Ra	WG	15 " x 5 "	1252 - 346	R700346	R40H597	R40H9200	R40H3540	R40H3541
	Ra	WG	15 " x 5 "	1252 - 346	R700346	R40H597	R40H9200	R40H3540	R40H3541
R185	Ra	WG	15 " x 6 "	4596 - 381	R700381	R40H597	R40H9200	R40H3540	R40H3541
	Ra	WG	15 " x 6 "	4596 - 381	R700381	R40H597	R40H9200	R40H3540	R40H3541
	Ra	WG	15 " x 7 "	4597 - 383	R700383	R40H597	R40H9200	R40H3540	R40H3541
	Ra	WG	15 " x 7 "	4597 - 383	R700383	R40H597	R40H9200	R40H3540	R40H3541
Single System									
F070	Fa	WG	15 " x 3 "	1245C - 321	R700321	R40H521	R40H9237	R40H3502	R40H3503
	Fa	WG	15 " x 3 "	1245C - 321	R700321	R40H521	R40H9237	R40H3502	R40H3503
	Fa	WG	15 " x 3 "	1245C - 321	R700321	R40H521	R40H9237	R40H3502	R40H3503
	Fa	WG	15 " x 3 "	1245C - 321	R700321	R40H521	R40H9237	R40H3502	R40H3503
Split System									
F070	Fa	WG	15 " x 3 "	1245C - 321	R700321	R40H521	R40H9237	R40H3502	R40H3503
	Fa	WG	15 " x 3 "	1245C - 321	R700321	R40H521	R40H9237	R40H3502	R40H3503
	Fa	WG	15 " x 3 "	1245C - 321	R700321	R40H521	R40H9237	R40H3502	R40H3503
	Fa	WG	15 " x 3 "	1245C - 321	R700321	R40H521	R40H9237	R40H3502	R40H3503
Split System									
F090, F120	Fa	WG	15 " x 3 "	1245C - 321	R700321	R40H521	R40H9237	R40H3502	R40H3503
	Fa	WG	15 " x 3 "	1245C - 321	R700321	R40H521	R40H9237	R40H3502	R40H3503
	Fa	WG	15 " x 3 "	1245C - 321	R700321	R40H521	R40H9237	R40H3502	R40H3503
	Fa	WG	15 " x 3 "	1245C - 321	R700321	R40H521	R40H9237	R40H3502	R40H3503
L800 SERIES: LOUISVILLE CONVENTIONAL 106.4 BBC TILT HOOD CHASSIS CAB TRUCK									
1992									
	Fd	DN		7149 - D236	MD236[341]	69310693	69310782	NR	NR
	Fd	DN		7149 - D236	MD236[341]	69310693	69310782	NR	NR
	Fd	DN		7149 - D236	MD236[341]	69310693	69310782	NR	NR
	Fd	DN		7141 - D224	MD224[340]	69310693	60050153	NR	NR
	Ra	LG	15 " x 7 "	4505A - 544	N/A	R40H618	NR	NR	NR
	Ra	LG	15 " x 7 "	4505A - 544	N/A	R40H618	NR	SP7887S	SP7887S
1991									
	Fd	DN		7141 - D224	MD224[340]	69310693	60050153	NR	NR

9 - 6 Stud, Dayton Rotor, Hat Style
42 - 6 Stud, Dayton Rotor, "U" Style
187 - 6 Stud, 6.443" Hub
37 - Also available as a New unit
53 - Power Brakes
188 - 6 Stud, 9.251" Hub
41 - Aluminum piston
186 - 10 Stud
204 - Right Hand; use E-4057 for Left Hand Expander Kits

MERITOR DRUM OR ROTOR NO.	CALIPER OR CYLINDER BORE SIZE	MERITOR CALIPER OR WHEEL CYLINDER (LEFT)	MERITOR CALIPER OR WHEEL CYLINDER (RIGHT)	MERITOR CALIPER OR WHEEL CYLINDER REPAIR KIT	MERITOR CALIPER PISTON	MERITOR MASTER CYLINDER	MERITOR MASTER CYLINDER KIT	MERITOR BRAKE HOSE (LEFT)	MERITOR BRAKE HOSE (RIGHT)
									FORD(Cont.)
									F800 SERIES: CONVENTIONAL(Cont.)
-	1-1/2 "	R4033607	R4033607	R4166818	NR	-	-	-	-
-	1-5/8 "	R4133606	R4133606	R415193	NR	-	-	-	-
-	1-1/2 "	R4033607	R4033607	R4166818	NR	-	-	-	-
-	1-5/8 "	R4133338	R4133338	R4166689	NR	-	-	-	-
-	1-5/8 "	R4133338	R4133338	R4166689	NR	-	-	-	-
-	1-5/8 "	R4133338	R4133338	R4166689	NR	-	-	-	-
-	1-5/8 "	R4133338	R4133338	R4166689	NR	-	-	-	-
-	1-3/4 "	R4133400	R4133400	R4166917	NR	-	-	-	-
-	1-3/4 "	R4133400	R4133400	R4166917	NR	-	-	-	-
-	1-1/8 "	R4133716	R4133717	R4166926	NR	-	-	-	-
-	1-1/8 "	R4133714	R4133715	R4166926	NR	-	-	-	-
-	1-1/8 "	R4133716	R4133717	R4166926	NR	-	-	-	-
-	1-1/8 "	R4133714	R4133715	R4166926	NR	-	-	-	-
-	1-1/8 "	R4133714	R4133715	R4166926	NR	N/A[358]	R4122688	-	-
-	1-1/8 "	R4133719	R4133718	R4166926	NR	N/A[358]	R4122688	-	-
-	1-1/8 "	R4133714	R4133715	R4166926	NR	N/A[358]	R4122688	-	-
-	1-1/8 "	R4133719	R4133718	R4166926	NR	N/A[358]	R4122688	-	-
-	1-1/4 "	R4133720	R4133721	R4166923	NR	-	-	-	-
-	1-1/4 "	R4133581	R4133581	R4166923	NR	-	-	-	-
-	1-1/4 "	R4133720	R4133721	R4166923	NR	-	-	-	-
-	1-1/4 "	R4133581	R4133582	R4166923	NR	-	-	-	-
-	1.09375	R4133484	R4133485	R4166819	NR	-	-	-	-
-	1.09375	R4133484	R4133485	R4166819	NR	-	-	-	-
23-122700-002[9]	2-1/2 "	R424244X	R424244X[37]	60050266	69270757[41]	-	-	-	-
23-122691-002[42]	2-7/8 "	60050145X	60050145X[37]	60050146	69270702[41]	-	-	-	-
23-122703-002[186]	2-7/8 "	60050145X	60050145X[37]	60050146	69270702[41]	-	-	-	-
-	1-1/2 "	R4033607	R4033607	R4166818	NR	-	-	-	-
-	1-1/2 "	R4033607	R4033607	R4166818	NR	-	-	-	-
-	1-5/8 "	R4133606	R4133606	R415193	NR	-	-	-	-
-	1-5/8 "	R4133338	R4133338	R4166689	NR	-	-	-	-
-	1-5/8 "	R4133338	R4133338	R4166689	NR	-	-	-	-
-	1-5/8 "	R4133338	R4133338	R4166689	NR	-	-	-	-
-	1-5/8 "	R4133338	R4133338	R4166689	NR	-	-	-	-
-	1-3/4 "	R4133400	R4133400	R4166917	NR	-	-	-	-
-	1-3/4 "	R4133400	R4133400	R4166917	NR	-	-	-	-
-	1-1/8 "	R4133714	R4133715	R4166926	NR	-	-	-	-
-	1-1/8 "	R4133716	R4133717	R4166926	NR	-	-	-	-
-	1-1/8 "	R4133714	R4133715	R4166926	NR	-	-	-	-
-	1-1/8 "	R4133716	R4133717	R4166926	NR	-	-	-	-
-	1-1/8 "	R4133719	R4133718	R4166926	NR	N/A[358]	R4122688	-	-
-	1-1/8 "	R4133714	R4133715	R4166926	NR	N/A[358]	R4122688	-	-
-	1-1/8 "	R4133714	R4133715	R4166926	NR	N/A[358]	R4122688	-	-
-	1-1/8 "	R4133719	R4133718	R4166926	NR	N/A[358]	R4122688	-	-
-	1-1/4 "	R4133581	R4133582	R4166923	NR	-	-	-	-
-	1-1/4 "	R4133720	R4133721	R4166923	NR	-	-	-	-
-	1-1/4 "	R4133581	R4133581	R4166923	NR	-	-	-	-
-	1-1/4 "	R4133720	R4133721	R4166923	NR	-	-	-	-
									L800 SERIES: LOUISVILLE CONVENTIONAL 106.4 BBC TILT HOOD CHASSIS CAB TRUCK
23-122703-002[186]	2-7/8 "	60050145X	60050145X[37]	60050146	69270702[41]	R4111995[53]	-	R4577461	R4577461
23-122743-002[187]	2-7/8 "	60050145X	60050145X[37]	60050146	69270702[41]	R4111995[53]	-	R4577461	R4577461
23-122691-002[188]	2-7/8 "	60050145X	60050145X[37]	60050146	69270702[41]	R4111995[53]	-	R4577461	R4577461
23-122700-002[9]	2-1/2 "	R424244X	R424244X[37]	60050266	69270757[41]	R4111995[53]	-	R4577461	R4577461
N/A	1-3/4 "	201179X	201180X	SP7873S	SP7880S[204]	-	-	R4577870	R4577870
N/A	1-3/4 "	201183X	201184X[329]	SP7873S	NR	-	-	R4577870	R4577870
23-122700-002[9]	2-1/2 "	R424244X	R424244X[37]	60050266	69270757[41]	R4111995[53]	-	R4577461	R4577461

329 - Forward
358 - Split System

340 - Use 69160457 for Disc Pad Retainer Clip

341 - Use 69160445 for Disc Pad Retainer Clip

MAKE MODEL YEAR AXLE CODE AXLE WEIGHT	AXLE & BRK. TYPE	BRK. MFG.	BRAKE SIZE	FMSI	MERITOR DISC PAD OR BRAKE SHOE	MERITOR GUIDE PIN OR RETURN SPRING KIT	MERITOR CALIPER HWD. KIT OR RETURN SPRING KIT	MERITOR ADJUSTER KIT (LEFT WHEEL)	MERITOR ADJUSTER KIT (RIGHT WHEEL)
FORD(Cont.)									
L800 SERIES: LOUISVILLE CONVENTIONAL 106.4 BBC TILT HOOD CHASSIS CAB TRUCK(Cont.)									
1991									
	Fd	DN		7149 - D236	MD236[341]	69310693	69310782	NR	NR
	Fd	DN		7149 - D236	MD236[341]	69310693	69310782	NR	NR
	Fd	DN		7149 - D236	MD236[341]	69310693	69310782	NR	NR
	Ra	LG	15 " x 7 "	4505A - 544	N/A	R40H618	NR	SP7887S	SP7887S
	Ra	LG	15 " x 7 "	4505A - 544	N/A	R40H618	NR	NR	NR
1990									
	Fd	DN		7141 - D224	MD224[340]	69310693	60050153	NR	NR
	Fd	DN		7149 - D236	MD236[341]	69310693	69310782	NR	NR
	Fd	DN		7149 - D236	MD236[341]	69310693	69310782	NR	NR
	Fd	DN		7149 - D236	MD236[341]	69310693	69310782	NR	NR
	Ra	LG	15 " x 7 "	4505A - 544	N/A	R40H618	NR	SP7887S	SP7887S
	Ra	LG	15 " x 7 "	4505A - 544	N/A	R40H618	NR	NR	NR
1989									
	Fd	DN		7149 - D236	MD236[341]	69310693	69310782[43]	NR	NR
	Fd	DN		7149 - D236	MD236[341]	69310693	69310782[43]	NR	NR
	Fd	DN		7141 - D224	MD224[340]	69310693	60050153	NR	NR
	Fd	DN		7149 - D236	MD236[341]	69310693	69310782[43]	NR	NR
	Ra	LG	15 " x 7 "	4505A - 544	N/A	R40H618	NR	NR	NR
	Ra	LG	15 " x 7 "	4505A - 544	N/A	R40H618	NR	SP7887S	SP7887S
1988									
	Fd	DN		7141 - D224	MD224[340]	69310693	60050153	NR	NR
	Fd	DN		7149 - D236	MD236[341]	69310693	69310782[43]	NR	NR
	Fd	DN		7149 - D236	MD236[341]	69310693	69310782[43]	NR	NR
	Fd	DN		7149 - D236	MD236[341]	69310693	69310782[43]	NR	NR
	Ra	LG	15 " x 7 "	4505A - 544	N/A	R40H618	NR	SP7887S	SP7887S
	Ra	LG	15 " x 7 "	4505A - 544	N/A	R40H618	NR	NR	NR
1987									
	Fd	DN		7149 - D236	MD236[341]	69310693	69310782[43]	NR	NR
	Fd	DN		7149 - D236	MD236[341]	69310693	69310782[43]	NR	NR
	Fd	DN		7141 - D224	MD224[340]	69310693	60050153	NR	NR
	Fd	DN		7149 - D236	MD236[341]	69310693	69310782[43]	NR	NR
	Ra	LG	15 " x 7 "	4505A - 544	N/A	R40H618	NR	SP7887S	SP7887S
	Ra	LG	15 " x 7 "	4505A - 544	N/A	R40H618	NR	NR	NR
1986									
	Fd	DN		7141 - D224	MD224[340]	69310693	60050153	NR	NR
	Fd	DN		7149 - D236	MD236[341]	69310693	69310782	NR	NR
	Fd	DN		7149 - D236	MD236[341]	69310693	69310782	NR	NR
	Fd	DN		7149 - D236	MD236[341]	69310693	69310782	NR	NR
	Ra	LG	15 " x 7 "	4505A - 544	N/A	R40H618	NR	SP7887S	SP7887S
	Ra	LG	15 " x 7 "	4505A - 544	N/A	R40H618	NR	NR	NR
1985									
	Fd	DN		7141 - D224	MD224[340]	69310693	60050153	NR	NR
	Fd	DN		7149 - D236	MD236[341]	69310693	R40H5523	NR	NR
	Fd	DN		7149 - D236	MD236[341]	69310693	R40H5523	NR	NR
	Fd	DN		7149 - D236	MD236[341]	69310693	R40H5523	NR	NR
	Ra	LG	15 " x 7 "	4505A - 544	N/A	R40H618	NR	NR	NR
	Ra	LG	15 " x 7 "	4505A - 544	N/A	R40H618	NR	SP7887S	SP7887S
1984									
	Fd	DN		7141 - D224	MD224[340]	69310693	60050153	NR	NR
	Fd	DN		7149 - D236	MD236[341]	69310693	R40H5523	NR	NR
	Fd	DN		7149 - D236	MD236[341]	69310693	R40H5523	NR	NR
	Fd	DN		7149 - D236	MD236[341]	69310693	R40H5523	NR	NR
	Ra	LG	15 " x 7 "	4505A - 544	N/A	R40H618	NR	SP7887S	SP7887S
	Ra	LG	15 " x 7 "	4505A - 544	N/A	R40H618	NR	NR	NR
1983									
	Ra	LG	15 " x 6 "	4504A - 543	N/A	R40H618	NR	SP7888S	SP7888S
	Ra	LG	15 " x 6 "	4504A - 543	N/A	R40H618	NR	NR	NR
	Ra	LG	15 " x 7 "	4505A - 544	N/A	R40H618	NR	SP7888S	SP7888S
	Ra	LG	15 " x 7 "	4505A - 544	N/A	R40H618	NR	NR	NR
F050, F055, F060	Fa	KH	14 " x 2-1/2 "	2060 - 361	Discontinued	R40H596	R40H9219	R40H3536	R40H3537
F070	Fa	WG	15 " x 3 "	1245C - 321	R700321	R40H521	R40H9237	R40H3502	R40H3503
	Fa	WG	15 " x 3 "	1245C - 321	R700321	R40H521	R40H9237	R40H3502	R40H3503
	Fa	WG	15 " x 3 "	1245C - 321	R700321	R40H521	R40H9237	R40H3502	R40H3503
	Fa	WG	15 " x 3 "	1245C - 321	R700321	R40H521	R40H9237	R40H3502	R40H3503

9 - 6 Stud, Dayton Rotor, Hat Style
43 - For Applications Taking A Longer Shim, Use R404151706
187 - 6 Stud, 6.443" Hub
37 - Also available as a New unit
53 - Power Brakes
188 - 6 Stud, 9.251" Hub
41 - Aluminum piston
186 - 10 Stud
204 - Right Hand; use E-4057 for Left Hand Expander Kits

MERITOR DRUM OR ROTOR NO.	CALIPER OR CYLINDER BORE SIZE	MERITOR CALIPER OR WHEEL CYLINDER (LEFT)	MERITOR CALIPER OR WHEEL CYLINDER (RIGHT)	MERITOR CALIPER OR WHEEL CYLINDER REPAIR KIT	MERITOR CALIPER PISTON	MERITOR MASTER CYLINDER	MERITOR MASTER CYLINDER KIT	MERITOR BRAKE HOSE (LEFT)	MERITOR BRAKE HOSE (RIGHT)
									FORD(Cont.)
L800 SERIES: LOUISVILLE CONVENTIONAL 106.4 BBC TILT HOOD CHASSIS CAB TRUCK(Cont.)									
23-122743-002[187]	2-7/8 "	60050145X	60050145X[37]	60050146	69270702[41]	R4111995[53]	-	R4577461	R4577461
23-122691-002[188]	2-7/8 "	60050145X	60050145X[37]	60050146	69270702[41]	R4111995[53]	-	R4577461	R4577461
23-122703-002[186]	2-7/8 "	60050145X	60050145X[37]	60050146	69270702[41]	R4111995[53]	-	R4577461	R4577461
N/A	1-3/4 "	201183X	201184X[329]	SP7873S	NR	-	-	R4577870	R4577870
N/A	1-3/4 "	201179X	201180X	SP7873S	SP7880S[204]	-	-	R4577870	R4577870
23-122700-002[9]	2-1/2 "	R424244X	R424244X[37]	60050266	69270757[41]	R4111995[53]	-	R4577454	R4577455
23-122691-002[188]	2-7/8 "	60050145X	60050145X[37]	60050146	69270702[41]	R4111995[53]	-	R4577454	R4577455
23-122743-002[187]	2-7/8 "	60050145X	60050145X[37]	60050146	69270702[41]	R4111995[53]	-	R4577454	R4577455
23-122703-002[186]	2-7/8 "	60050145X	60050145X[37]	60050146	69270702[41]	R4111995[53]	-	R4577454	R4577455
N/A	1-3/4 "	201183X	201184X[329]	SP7873S	NR	-	-	R4577870	R4577870
N/A	1-3/4 "	201179X	201180X	SP7873S	SP7880S[204]	-	-	R4577870	R4577870
23-122703-002[186]	2-7/8 "	60050145X	60050145X[37]	60050146	69270702[41]	R4111995[53]	-	R4577454	R4577455
23-122691-002[188]	2-7/8 "	60050145X	60050145X[37]	60050146	69270702[41]	R4111995[53]	-	R4577454	R4577455
23-122700-002[9]	2-1/2 "	R424244X	R424244X[37]	60050266	69270757[41]	R4111995[53]	-	R4577454	R4577455
23-122743-002[187]	2-7/8 "	60050145X	60050145X[37]	60050146	69270702[41]	R4111995[53]	-	R4577454	R4577455
N/A	1-3/4 "	201179X	201180X	SP7873S	SP7880S[204]	-	-	N/A	N/A
N/A	1-3/4 "	201183X	201184X[329]	SP7873S	NR	-	-	N/A	N/A
23-122700-002[9]	2-1/2 "	R424244X	R424244X[37]	60050266	69270757[41]	R4111995[53]	-	R4577454	R4577455
23-122691-002[188]	2-7/8 "	60050145X	60050145X[37]	60050146	69270702[41]	R4111995[53]	-	R4577454	R4577455
23-122703-002[186]	2-7/8 "	60050145X	60050145X[37]	60050146	69270702[41]	R4111995[53]	-	R4577454	R4577455
23-122743-002[187]	2-7/8 "	60050145X	60050145X[37]	60050146	69270702[41]	R4111995[53]	-	R4577454	R4577455
N/A	1-3/4 "	201183X	201184X[329]	SP7873S	NR	-	-	N/A	N/A
N/A	1-3/4 "	201179X	201180X	SP7873S	SP7880S[204]	-	-	N/A	N/A
23-122703-002[186]	2-7/8 "	60050145X	60050145X[37]	60050146	69270702[41]	R4111995[53]	-	R4577454	R4577455
23-122691-002[188]	2-7/8 "	60050145X	60050145X[37]	60050146	69270702[41]	R4111995[53]	-	R4577454	R4577455
23-122700-002[9]	2-1/2 "	R424244X	R424244X[37]	60050266	69270757[41]	R4111995[53]	-	R4577454	R4577455
23-122743-002[187]	2-7/8 "	60050145X	60050145X[37]	60050146	69270702[41]	R4111995[53]	-	R4577454	R4577455
N/A	1-3/4 "	201183X	201184X[329]	SP7873S	NR	-	-	N/A	N/A
N/A	1-3/4 "	201179X	201180X	SP7873S	SP7880S[204]	-	-	N/A	N/A
23-122700-002[9]	2-1/2 "	R424244X	R424244X[37]	60050266	69270757[41]	R4111995[53]	-	R4577454	R4577455
23-122743-002[187]	2-7/8 "	60050145X	60050145X[37]	60050146	69270702[41]	R4111995[53]	-	R4577454	R4577455
23-122703-002[186]	2-7/8 "	60050145X	60050145X[37]	60050146	69270702[41]	R4111995[53]	-	R4577454	R4577455
23-122691-002[188]	2-7/8 "	60050145X	60050145X[37]	60050146	69270702[41]	R4111995[53]	-	R4577454	R4577455
N/A	1-3/4 "	201183X	201184X[329]	SP7873S	NR	-	-	N/A	N/A
N/A	1-3/4 "	201179X	201180X	SP7873S	SP7880S[204]	-	-	N/A	N/A
23-122700-002[9]	2-1/2 "	R424244X	R424244X[37]	60050266	69270757[41]	R4111995[53]	-	R4577454	R4577455
23-122703-002[186]	2-7/8 "	60050145X	60050145X[37]	60050146	69270702[41]	R4111995[53]	-	R4577454	R4577455
23-122743-002[187]	2-7/8 "	60050145X	60050145X[37]	60050146	69270702[41]	R4111995[53]	-	R4577454	R4577455
23-122691-002[188]	2-7/8 "	60050145X	60050145X[37]	60050146	69270702[41]	R4111995[53]	-	R4577454	R4577455
N/A	1-3/4 "	201179X	201180X	SP7873S	SP7880S[204]	-	-	N/A	N/A
N/A	1-3/4 "	201183X	201184X[329]	SP7873S	NR	-	-	N/A	N/A
23-122700-002[9]	2-1/2 "	R424244X	R424244X[37]	60050266	69270757[41]	R4111995[53]	-	R4577454	R4577455
23-122691-002[188]	2-7/8 "	60050145X	60050145X[37]	60050146	69270702[41]	R4111995[53]	-	R4577454	R4577455
23-122703-002[186]	2-7/8 "	60050145X	60050145X[37]	60050146	69270702[41]	R4111995[53]	-	R4577454	R4577455
23-122743-002[187]	2-7/8 "	60050145X	60050145X[37]	60050146	69270702[41]	R4111995[53]	-	R4577454	R4577455
N/A	1-3/4 "	201183X	201184X[329]	SP7873S	NR	-	-	N/A	N/A
N/A	1-3/4 "	201179X	201180X	SP7873S	SP7880S[204]	-	-	N/A	N/A
N/A	1-5/8 "	201185	201186[329]	SP7895S	NR	-	-	R4577147	R4577147
N/A	1-5/8 "	201181	201182	SP7895S	NR	-	-	R4577147	R4577147
N/A	1-5/8 "	201185	201186[329]	SP7895S	NR	-	-	R4577147	R4577147
N/A	1-5/8 "	201181	201182	SP7895S	NR	-	-	R4577147	R4577147
N/A	1.09375	R4133484	R4133485	R4166819	NR	R4111629[53]	R4122484	R4577460	R4577460
N/A	1-1/8 "	R4133716	R4133717	R4166926	NR	R4111772[53]	R4122488	R4577454	R4577455
N/A	1-1/8 "	R4133714	R4133715	R4166926	NR	R4111995[53]	-	R4577454	R4577455
N/A	1-1/8 "	R4133719	R4133718	R4166926	NR	R4111634[53]	N/A	R4577452	R4577453
N/A	1-1/8 "	R4133714	R4133715	R4166926	NR	R4111631[221]	R4122486	R4577452	R4577453

221 - Power Brakes, 17,500 or 18,500 lb. Rear Axle
329 - Forward
340 - Use 69160457 for Disc Pad Retainer Clip
341 - Use 69160445 for Disc Pad Retainer Clip

MAKE MODEL YEAR AXLE CODE AXLE WEIGHT	AXLE & BRK. TYPE	BRK. MFG.	BRAKE SIZE	FMSI	MERITOR DISC PAD OR BRAKE SHOE	MERITOR GUIDE PIN OR RETURN SPRING KIT	MERITOR CALIPER HWD. KIT OR RETURN SPRING KIT	MERITOR ADJUSTER KIT (LEFT WHEEL)	MERITOR ADJUSTER KIT (RIGHT WHEEL)
FORD(Cont.)									
L800 SERIES: LOUISVILLE CONVENTIONAL 106.4 BBC TILT HOOD CHASSIS CAB TRUCK(Cont.)									
1983									
	Fd	DN		7141 - D224	MD224[340]	69310693	60050153	NR	NR
F080, F090	Fd	DN		7149 - D236	MD236[341]	69310693	R40H5523	NR	NR
	Fd	DN		7149 - D236	MD236[341]	69310693	R40H5523	NR	NR
F090, F120	Fa	WG	15 " x 3 "	1245C - 321	R700321	R40H521	R40H9237	R40H3502	R40H3503
	Fa	WG	15 " x 3 "	1245C - 321	R700321	R40H521	R40H9237	R40H3502	R40H3503
R170, R175	Ra	KH	15 " x 5 "	4646 - 400	R700400	R40H595	R40H9220	R40H3538	R40H3539
	Ra	WG	15 " x 5 "	1252 - 346	R700346	R40H597	R40H9200	R40H3540	R40H3541
R185	Ra	WG	15 " x 6 "	4596 - 381	R700381	R40H597	R40H9200	R40H3540	R40H3541
	Ra	WG	15 " x 7 "	4597 - 383	R700383	R40H597	R40H9200	R40H3540	R40H3541
1982									
	Ra	LG	15 " x 6 "	4504A - 543	N/A	R40H618	NR	SP7888S	SP7888S
	Ra	LG	15 " x 6 "	4504A - 543	N/A	R40H618	NR	NR	NR
	Ra	LG	15 " x 7 "	4505A - 544	N/A	R40H618	NR	SP7888S	SP7888S
	Ra	LG	15 " x 7 "	4505A - 544	N/A	R40H618	NR	NR	NR
F050, F055, F060	Fa	KH	14 " x 2-1/2 "	2060 - 361	Discontinued	R40H596	R40H9219	R40H3536	R40H3537
F070	Fa	WG	15 " x 3 "	1245C - 321	R700321	R40H521	R40H9237	R40H3502	R40H3503
	Fa	WG	15 " x 3 "	1245C - 321	R700321	R40H521	R40H9237	R40H3502	R40H3503
	Fa	WG	15 " x 3 "	1245C - 321	R700321	R40H521	R40H9237	R40H3502	R40H3503
	Fa	WG	15 " x 3 "	1245C - 321	R700321	R40H521	R40H9237	R40H3502	R40H3503
	Fd	DN		7141 - D224	MD224[340]	69310693	60050153	NR	NR
F080, F090	Fd	DN		7149 - D236	MD236[341]	69310693	R40H5523	NR	NR
	Fd	DN		7149 - D236	MD236[341]	69310693	R40H5523	NR	NR
F090, F120	Fa	WG	15 " x 3 "	1245C - 321	R700321	R40H521	R40H9237	R40H3502	R40H3503
	Fa	WG	15 " x 3 "	1245C - 321	R700321	R40H521	R40H9237	R40H3502	R40H3503
R170, R175	Ra	KH	15 " x 5 "	4646 - 400	R700400	R40H595	R40H9220	R40H3538	R40H3539
	Ra	WG	15 " x 5 "	1252 - 346	R700346	R40H597	R40H9200	R40H3540	R40H3541
R185	Ra	WG	15 " x 6 "	4596 - 381	R700381	R40H597	R40H9200	R40H3540	R40H3541
	Ra	WG	15 " x 7 "	4597 - 383	R700383	R40H597	R40H9200	R40H3540	R40H3541
1981									
	Ra	LG	15 " x 6 "	4504A - 543	N/A	R40H618	NR	NR	NR
	Ra	LG	15 " x 6 "	4504A - 543	N/A	R40H618	NR	SP7888S	SP7888S
	Ra	LG	15 " x 7 "	4505A - 544	N/A	R40H618	NR	NR	NR
	Ra	LG	15 " x 7 "	4505A - 544	N/A	R40H618	NR	SP7888S	SP7888S
F050, F055, F060	Fa	KH	14 " x 2-1/2 "	2060 - 361	Discontinued	R40H596	R40H9219	R40H3536	R40H3537
F070	Fa	WG	15 " x 3 "	1245C - 321	R700321	R40H521	R40H9237	R40H3502	R40H3503
	Fa	WG	15 " x 3 "	1245C - 321	R700321	R40H521	R40H9237	R40H3502	R40H3503
	Fa	WG	15 " x 3 "	1245C - 321	R700321	R40H521	R40H9237	R40H3502	R40H3503
	Fa	WG	15 " x 3 "	1245C - 321	R700321	R40H521	R40H9237	R40H3502	R40H3503
	Fd	DN		7141 - D224	MD224[340]	69310693	60050153	NR	NR
F080, F090	Fd	DN		7149 - D236	MD236[341]	69310693	R40H5523	NR	NR
	Fd	DN		7149 - D236	MD236[341]	69310693	R40H5523	NR	NR
F090, F120	Fa	WG	15 " x 3 "	1245C - 321	R700321	R40H521	R40H9237	R40H3502	R40H3503
	Fa	WG	15 " x 3 "	1245C - 321	R700321	R40H521	R40H9237	R40H3502	R40H3503
R170, R175	Ra	KH	15 " x 5 "	4646 - 400	R700400	R40H595	R40H9220	R40H3538	R40H3539
	Ra	WG	15 " x 5 "	1252 - 346	R700346	R40H597	R40H9200	R40H3540	R40H3541
R185	Ra	WG	15 " x 6 "	4596 - 381	R700381	R40H597	R40H9200	R40H3540	R40H3541
	Ra	WG	15 " x 7 "	4597 - 383	R700383	R40H597	R40H9200	R40H3540	R40H3541
1980									
	Ra	LG	15 " x 6 "	4504A - 543	N/A	R40H618	NR	NR	NR
	Ra	LG	15 " x 6 "	4504A - 543	N/A	R40H618	NR	SP7888S	SP7888S
	Ra	LG	15 " x 7 "	4505A - 544	N/A	R40H618	NR	SP7888S	SP7888S
	Ra	LG	15 " x 7 "	4505A - 544	N/A	R40H618	NR	NR	NR
F050, F055, F060	Fa	KH	14 " x 2-1/2 "	2060 - 361	Discontinued	R40H596	R40H9219	R40H3536	R40H3537
F070	Fa	WG	15 " x 3 "	1245C - 321	R700321	R40H521	R40H9237	R40H3502	R40H3503
	Fa	WG	15 " x 3 "	1245C - 321	R700321	R40H521	R40H9237	R40H3502	R40H3503
	Fa	WG	15 " x 3 "	1245C - 321	R700321	R40H521	R40H9237	R40H3502	R40H3503
	Fa	WG	15 " x 3 "	1245C - 321	R700321	R40H521	R40H9237	R40H3502	R40H3503
	Fd	DN		7141 - D224	MD224[340]	69310693	60050153	NR	NR
F080, F090	Fd	DN		7149 - D236	MD236[341]	69310693	R40H5523	NR	NR
	Fd	DN		7149 - D236	MD236[341]	69310693	R40H5523	NR	NR
F090, F120	Fa	WG	15 " x 3 "	1245C - 321	R700321	R40H521	R40H9237	R40H3502	R40H3503
	Fa	WG	15 " x 3 "	1245C - 321	R700321	R40H521	R40H9237	R40H3502	R40H3503
R170, R175	Ra	KH	15 " x 5 "	4646 - 400	R700400	R40H595	R40H9220	R40H3538	R40H3539

9 - 6 Stud, Dayton Rotor, Hat Style
53 - Power Brakes
214 - Power Brakes, Split System
37 - Also available as a New unit
186 - 10 Stud
221 - Power Brakes, 17,500 or 18,500 lb. Rear Axle
41 - Aluminum piston
188 - 6 Stud, 9.251" Hub
222 - Power Brakes, 18,500 or 22,000 lb. Rear Axle

MERITOR DRUM OR ROTOR NO.	CALIPER OR CYLINDER BORE SIZE	MERITOR CALIPER OR WHEEL CYLINDER (LEFT)	MERITOR CALIPER OR WHEEL CYLINDER (RIGHT)	MERITOR CALIPER OR WHEEL CYLINDER REPAIR KIT	MERITOR CALIPER PISTON	MERITOR MASTER CYLINDER	MERITOR MASTER CYLINDER KIT	MERITOR BRAKE HOSE (LEFT)	MERITOR BRAKE HOSE (RIGHT)
									FORD(Cont.)
L800 SERIES: LOUISVILLE CONVENTIONAL 106.4 BBC TILT HOOD CHASSIS CAB TRUCK(Cont.)									
23-122700-002[9]	2-1/2 "	R424244X	R424244X[37]	60050266	69270757[41]	R4111992[214]	R4122386	R4577452	R4577453
23-122691-002[188]	2-7/8 "	60050145X	60050145X[37]	60050146	69270702[41]	R4111992[214]	R4122386	R4577452	R4577453
23-122703-002[186]	2-7/8 "	60050145X	60050145X[37]	60050146	69270702[41]	R4111992[214]	R4122386	R4577452	R4577453
N/A	1-1/4 "	R4133720	R4133721	R4166923	NR	R4111630[222]	N/A	R4577452	R4577453
N/A	1-1/4 "	R4133581	R4133581	R4166923	NR	R4111992[214]	R4122386	R4577452	R4577453
N/A	1-1/2 "	R4033607	R4033607	R4166818	NR	-	-	R4577147	R4577147
N/A	1-5/8 "	R4133338	R4133338	R4166689	NR	-	-	R4577147	R4577147
N/A	1-5/8 "	R4133338	R4133338	R4166689	NR	-	-	R4577147	R4577147
N/A	1-3/4 "	R4133400	R4133400	R4166917	NR	-	-	R4577147	R4577147
N/A	1-5/8 "	201185	201186[329]	SP7895S	NR	-	-	R4577147	R4577147
N/A	1-5/8 "	201181	201182	SP7895S	NR	-	-	R4577147	R4577147
N/A	1-5/8 "	201185	201186[329]	SP7895S	NR	-	-	R4577147	R4577147
N/A	1-5/8 "	201181	201182	SP7895S	NR	-	-	R4577147	R4577147
N/A	1.09375	R4133484	R4133485	R4166819	NR	R4111629[53]	R4122484	R4577460	R4577460
N/A	1-1/8 "	R4133719	R4133718	R4166926	NR	R4111634[53]	N/A	R4577452	R4577453
N/A	1-1/8 "	R4133714	R4133715	R4166926	NR	R4111631[221]	R4122486	R4577452	R4577453
N/A	1-1/8 "	R4133714	R4133715	R4166926	NR	R4111995[53]	-	R4577454	R4577455
N/A	1-1/8 "	R4133716	R4133717	R4166926	NR	R4111772[53]	R4122488	R4577454	R4577455
23-122700-002[9]	2-1/2 "	R424244X	R424244X[37]	60050266	69270757[41]	R4111992[214]	R4122386	R4577452	R4577453
23-122691-002[188]	2-7/8 "	60050145X	60050145X[37]	60050146	69270702[41]	R4111992[214]	R4122386	R4577452	R4577453
23-122703-002[186]	2-7/8 "	60050145X	60050145X[37]	60050146	69270702[41]	R4111992[214]	R4122386	R4577452	R4577453
N/A	1-1/4 "	R4133720	R4133721	R4166923	NR	R4111630[222]	N/A	R4577452	R4577453
N/A	1-1/4 "	R4133581	R4133581	R4166923	NR	R4111992[214]	R4122386	R4577452	R4577453
N/A	1-1/2 "	R4033607	R4033607	R4166818	NR	-	-	R4577147	R4577147
N/A	1-5/8 "	R4133338	R4133338	R4166689	NR	-	-	R4577147	R4577147
N/A	1-5/8 "	R4133338	R4133338	R4166689	NR	-	-	R4577147	R4577147
N/A	1-3/4 "	R4133400	R4133400	R4166917	NR	-	-	R4577147	R4577147
N/A	1-5/8 "	201181	201182	SP7895S	NR	-	-	R4577147	R4577147
N/A	1-5/8 "	201185	201186[329]	SP7895S	NR	-	-	R4577147	R4577147
N/A	1-5/8 "	201181	201182	SP7895S	NR	-	-	R4577147	R4577147
N/A	1-5/8 "	201185	201186[329]	SP7895S	NR	-	-	R4577147	R4577147
N/A	1.09375	R4133484	R4133485	R4166819	NR	R4111629[53]	R4122484	R4577460	R4577460
N/A	1-1/8 "	R4133714	R4133715	R4166926	NR	R4111631[221]	R4122486	R4577452	R4577453
N/A	1-1/8 "	R4133714	R4133715	R4166926	NR	R4111995[53]	-	R4577454	R4577455
N/A	1-1/8 "	R4133719	R4133718	R4166926	NR	R4111634[53]	N/A	R4577452	R4577453
N/A	1-1/8 "	R4133716	R4133717	R4166926	NR	R4111772[53]	R4122488	R4577454	R4577455
23-122700-002[9]	2-1/2 "	R424244X	R424244X[37]	60050266	69270757[41]	R4111992[214]	R4122386	R4577452	R4577453
23-122703-002[186]	2-7/8 "	60050145X	60050145X[37]	60050146	69270702[41]	R4111992[214]	R4122386	R4577452	R4577453
23-122691-002[188]	2-7/8 "	60050145X	60050145X[37]	60050146	69270702[41]	R4111992[214]	R4122386	R4577452	R4577453
N/A	1-1/4 "	R4133720	R4133721	R4166923	NR	R4111630[222]	N/A	R4577452	R4577453
N/A	1-1/4 "	R4133581	R4133581	R4166923	NR	R4111992[214]	R4122386	R4577452	R4577453
N/A	1-1/2 "	R4033607	R4033607	R4166818	NR	-	-	R4577147	R4577147
N/A	1-5/8 "	R4133338	R4133338	R4166689	NR	-	-	R4577147	R4577147
N/A	1-5/8 "	R4133338	R4133338	R4166689	NR	-	-	R4577147	R4577147
N/A	1-3/4 "	R4133400	R4133400	R4166917	NR	-	-	R4577147	R4577147
N/A	1-5/8 "	201181	201182	SP7895S	NR	-	-	R4577147	R4577147
N/A	1-5/8 "	201185	201186[329]	SP7895S	NR	-	-	R4577147	R4577147
N/A	1-5/8 "	201185	201186[329]	SP7895S	NR	-	-	R4577147	R4577147
N/A	1-5/8 "	201181	201182	SP7895S	NR	-	-	R4577147	R4577147
N/A	1.09375	R4133484	R4133485	R4166819	NR	R4111629[53]	R4122484	R4577460	R4577460
N/A	1-1/8 "	R4133714	R4133715	R4166926	NR	R4111995[53]	-	R4577454	R4577455
N/A	1-1/8 "	R4133716	R4133717	R4166926	NR	R4111772[53]	R4122488	R4577454	R4577455
N/A	1-1/8 "	R4133714	R4133715	R4166926	NR	R4111631[221]	R4122486	R4577452	R4577453
N/A	1-1/8 "	R4133719	R4133718	R4166926	NR	R4111634[53]	N/A	R4577452	R4577453
23-122700-002[9]	2-1/2 "	R424244X	R424244X[37]	60050266	69270757[41]	R4111992[214]	R4122386	R4577452	R4577453
23-122703-002[186]	2-7/8 "	60050145X	60050145X[37]	60050146	69270702[41]	R4111992[214]	R4122386	R4577452	R4577453
23-122691-002[188]	2-7/8 "	60050145X	60050145X[37]	60050146	69270702[41]	R4111992[214]	R4122386	R4577452	R4577453
N/A	1-1/4 "	R4133581	R4133581	R4166923	NR	R4111992[214]	R4122386	R4577452	R4577453
N/A	1-1/4 "	R4133720	R4133721	R4166923	NR	R4111630[222]	N/A	R4577452	R4577453
N/A	1-1/2 "	R4033607	R4033607	R4166818	NR	-	-	R4577147	R4577147

329 - Forward

340 - Use 69160457 for Disc Pad Retainer Clip

341 - Use 69160445 for Disc Pad Retainer Clip

MAKE MODEL YEAR AXLE CODE AXLE WEIGHT	AXLE & BRK. TYPE	BRK. MFG.	BRAKE SIZE	FMSI	MERITOR DISC PAD OR BRAKE SHOE	MERITOR GUIDE PIN OR RETURN SPRING KIT	MERITOR CALIPER HWD. KIT OR RETURN SPRING KIT	MERITOR ADJUSTER KIT (LEFT WHEEL)	MERITOR ADJUSTER KIT (RIGHT WHEEL)
FORD(Cont.)									
L800 SERIES: LOUISVILLE CONVENTIONAL 106.4 BBC TILT HOOD CHASSIS CAB TRUCK(Cont.)									
1980									
	Ra	WG	15 " x 5 "	1252 - 346	R700346	R40H597	R40H9200	R40H3540	R40H3541
R185	Ra	WG	15 " x 6 "	4596 - 381	R700381	R40H597	R40H9200	R40H3540	R40H3541
	Ra	WG	15 " x 7 "	4597 - 383	R700383	R40H597	R40H9200	R40H3540	R40H3541
1979									
	Ra	LG	15 " x 6 "	4504A - 543	N/A	R40H618	NR	SP7888S	SP7888S
	Ra	LG	15 " x 6 "	4504A - 543	N/A	R40H618	NR	NR	NR
	Ra	LG	15 " x 7 "	4505A - 544	N/A	R40H618	NR	NR	NR
	Ra	LG	15 " x 7 "	4505A - 544	N/A	R40H618	NR	SP7888S	SP7888S
F050, F055, F060	Fa	KH	14 " x 2-1/2 "	2060 - 361	Discontinued	R40H596	R40H9219	R40H3536	R40H3537
F070	Fa	WG	15 " x 3 "	1245C - 321	R700321	R40H521	R40H9237	R40H3502	R40H3503
	Fa	WG	15 " x 3 "	1245C - 321	R700321	R40H521	R40H9237	R40H3502	R40H3503
	Fa	WG	15 " x 3 "	1245C - 321	R700321	R40H521	R40H9237	R40H3502	R40H3503
	Fa	WG	15 " x 3 "	1245C - 321	R700321	R40H521	R40H9237	R40H3502	R40H3503
	Fd	DN		7141 - D224	MD224[340]	69310693	60050153	NR	NR
F080, F090	Fd	DN		7149 - D236	MD236[341]	69310693	R40H5523	NR	NR
	Fd	DN		7149 - D236	MD236[341]	69310693	R40H5523	NR	NR
F090, F120	Fa	WG	15 " x 3 "	1245C - 321	R700321	R40H521	R40H9237	R40H3502	R40H3503
	Fa	WG	15 " x 3 "	1245C - 321	R700321	R40H521	R40H9237	R40H3502	R40H3503
R170, R175	Ra	KH	15 " x 5 "	4646 - 400	R700400	R40H595	R40H9220	R40H3538	R40H3539
	Ra	WG	15 " x 5 "	1252 - 346	R700346	R40H597	R40H9200	R40H3540	R40H3541
R185	Ra	WG	15 " x 6 "	4596 - 381	R700381	R40H597	R40H9200	R40H3540	R40H3541
	Ra	WG	15 " x 7 "	4597 - 383	R700383	R40H597	R40H9200	R40H3540	R40H3541
1978									
	Ra	LG	15 " x 6 "	4504A - 543	N/A	R40H618	NR	NR	NR
	Ra	LG	15 " x 6 "	4504A - 543	N/A	R40H618	NR	SP7888S	SP7888S
	Ra	LG	15 " x 7 "	4505A - 544	N/A	R40H618	NR	SP7888S	SP7888S
	Ra	LG	15 " x 7 "	4505A - 544	N/A	R40H618	NR	NR	NR
F050, F055, F060	Fa	KH	14 " x 2-1/2 "	2060 - 361	Discontinued	R40H596	R40H9219	R40H3536	R40H3537
F070	Fa	WG	15 " x 3 "	1245C - 321	R700321	R40H521	R40H9237	R40H3502	R40H3503
	Fa	WG	15 " x 3 "	1245C - 321	R700321	R40H521	R40H9237	R40H3502	R40H3503
	Fa	WG	15 " x 3 "	1245C - 321	R700321	R40H521	R40H9237	R40H3502	R40H3503
	Fa	WG	15 " x 3 "	1245C - 321	R700321	R40H521	R40H9237	R40H3502	R40H3503
	Fd	DN		7141 - D224	MD224[340]	69310693	60050153	NR	NR
F080, F090	Fd	DN		7149 - D236	MD236[341]	69310693	R40H5523	NR	NR
	Fd	DN		7149 - D236	MD236[341]	69310693	R40H5523	NR	NR
F090, F120	Fa	WG	15 " x 3 "	1245C - 321	R700321	R40H521	R40H9237	R40H3502	R40H3503
	Fa	WG	15 " x 3 "	1245C - 321	R700321	R40H521	R40H9237	R40H3502	R40H3503
R170, R175	Ra	KH	15 " x 5 "	4646 - 400	R700400	R40H595	R40H9220	R40H3538	R40H3539
	Ra	WG	15 " x 5 "	1252 - 346	R700346	R40H597	R40H9200	R40H3540	R40H3541
R185	Ra	WG	15 " x 6 "	4596 - 381	R700381	R40H597	R40H9200	R40H3540	R40H3541
	Ra	WG	15 " x 7 "	4597 - 383	R700383	R40H597	R40H9200	R40H3540	R40H3541
1977									
	Ra	LG	15 " x 6 "	4504A - 543	N/A	R40H618	NR	SP7888S	SP7888S
	Ra	LG	15 " x 6 "	4504A - 543	N/A	R40H618	NR	NR	NR
	Ra	LG	15 " x 7 "	4505A - 544	N/A	R40H618	NR	SP7888S	SP7888S
	Ra	LG	15 " x 7 "	4505A - 544	N/A	R40H618	NR	NR	NR
F050, F055, F060	Fa	KH	14 " x 2-1/2 "	2060 - 361	Discontinued	R40H596	R40H9219	R40H3536	R40H3537
F070	Fa	WG	15 " x 3 "	1245C - 321	R700321	R40H521	R40H9237	R40H3502	R40H3503
	Fa	WG	15 " x 3 "	1245C - 321	R700321	R40H521	R40H9237	R40H3502	R40H3503
	Fa	WG	15 " x 3 "	1245C - 321	R700321	R40H521	R40H9237	R40H3502	R40H3503
	Fa	WG	15 " x 3 "	1245C - 321	R700321	R40H521	R40H9237	R40H3502	R40H3503
	Fd	DN		7141 - D224	MD224[340]	69310693	60050153	NR	NR
F080, F090	Fd	DN		7149 - D236	MD236[341]	69310693	R40H5523	NR	NR
	Fd	DN		7149 - D236	MD236[341]	69310693	R40H5523	NR	NR
F090, F120	Fa	WG	15 " x 3 "	1245C - 321	R700321	R40H521	R40H9237	R40H3502	R40H3503
	Fa	WG	15 " x 3 "	1245C - 321	R700321	R40H521	R40H9237	R40H3502	R40H3503
R170, R175	Ra	KH	15 " x 5 "	4646 - 400	R700400	R40H595	R40H9220	R40H3538	R40H3539
	Ra	WG	15 " x 5 "	1252 - 346	R700346	R40H597	R40H9200	R40H3540	R40H3541
R185	Ra	WG	15 " x 6 "	4596 - 381	R700381	R40H597	R40H9200	R40H3540	R40H3541
	Ra	WG	15 " x 7 "	4597 - 383	R700383	R40H597	R40H9200	R40H3540	R40H3541
1976									
	Ra	LG	15 " x 6 "	4504A - 543	N/A	R40H618	NR	NR	NR
	Ra	LG	15 " x 6 "	4504A - 543	N/A	R40H618	NR	SP7888S	SP7888S

9 - 6 Stud, Dayton Rotor, Hat Style
53 - Power Brakes
214 - Power Brakes, Split System

37 - Also available as a New unit
186 - 10 Stud
221 - Power Brakes, 17,500 or 18,500 lb. Rear Axle

41 - Aluminum piston
188 - 6 Stud, 9.251" Hub
222 - Power Brakes, 18,500 or 22,000 lb. Rear Axle

MERITOR DRUM OR ROTOR NO.	CALIPER OR CYLINDER BORE SIZE	MERITOR CALIPER OR WHEEL CYLINDER (LEFT)	MERITOR CALIPER OR WHEEL CYLINDER (RIGHT)	MERITOR CALIPER OR WHEEL CYLINDER REPAIR KIT	MERITOR CALIPER PISTON	MERITOR MASTER CYLINDER	MERITOR MASTER CYLINDER KIT	MERITOR BRAKE HOSE (LEFT)	MERITOR BRAKE HOSE (RIGHT)
									FORD(Cont.)
L800 SERIES: LOUISVILLE CONVENTIONAL 106.4 BBC TILT HOOD CHASSIS CAB TRUCK(Cont.)									
N/A	1-5/8 "	R4133338	R4133338	R4166689	NR	-	-	R4577147	R4577147
N/A	1-5/8 "	R4133338	R4133338	R4166689	NR	-	-	R4577147	R4577147
N/A	1-3/4 "	R4133400	R4133400	R4166917	NR	-	-	R4577147	R4577147
N/A	1-5/8 "	201185	201186[329]	SP7895S	NR	-	-	R4577147	R4577147
N/A	1-5/8 "	201181	201182	SP7895S	NR	-	-	R4577147	R4577147
N/A	1-5/8 "	201181	201182	SP7895S	NR	-	-	R4577147	R4577147
N/A	1-5/8 "	201185	201186[329]	SP7895S	NR	-	-	R4577147	R4577147
N/A	1.09375	R4133484	R4133485	R4166819	NR	R4111629[53]	R4122484	R4577460	R4577460
N/A	1-1/8 "	R4133716	R4133717	R4166926	NR	R4111772[53]	R4122488	R4577454	R4577455
N/A	1-1/8 "	R4133714	R4133715	R4166926	NR	R4111995[53]	-	R4577454	R4577455
N/A	1-1/8 "	R4133714	R4133715	R4166926	NR	R4111631[221]	R4122486	R4577452	R4577453
N/A	1-1/8 "	R4133719	R4133718	R4166926	NR	R4111634[53]	N/A	R4577452	R4577453
23-122700-002[9]	2-1/2 "	R424244X	R424244X[37]	60050266	69270757[41]	R4111992[214]	R4122386	R4577452	R4577453
23-122703-002[186]	2-7/8 "	60050145X	60050145X[37]	60050146	69270702[41]	R4111992[214]	R4122386	R4577452	R4577453
23-122691-002[188]	2-7/8 "	60050145X	60050145X[37]	60050146	69270702[41]	R4111992[214]	R4122386	R4577452	R4577453
N/A	1-1/4 "	R4133581	R4133581	R4166923	NR	R4111992[214]	R4122386	R4577452	R4577453
N/A	1-1/4 "	R4133720	R4133721	R4166923	NR	R4111630[222]	N/A	R4577452	R4577453
N/A	1-1/2 "	R4033607	R4033607	R4166818	NR	-	-	R4577147	R4577147
N/A	1-5/8 "	R4133338	R4133338	R4166689	NR	-	-	R4577147	R4577147
N/A	1-5/8 "	R4133338	R4133338	R4166689	NR	-	-	R4577147	R4577147
N/A	1-3/4 "	R4133400	R4133400	R4166917	NR	-	-	R4577147	R4577147
N/A	1-5/8 "	201181	201182	SP7895S	NR	-	-	R4577147	R4577147
N/A	1-5/8 "	201185	201186[329]	SP7895S	NR	-	-	R4577147	R4577147
N/A	1-5/8 "	201185	201186[329]	SP7895S	NR	-	-	R4577147	R4577147
N/A	1-5/8 "	201181	201182	SP7895S	NR	-	-	R4577147	R4577147
N/A	1.09375	R4133484	R4133485	R4166819	NR	R4111629[53]	R4122484	R4577460	R4577460
N/A	1-1/8 "	R4133716	R4133717	R4166926	NR	R4111772[53]	R4122488	R4577454	R4577455
N/A	1-1/8 "	R4133714	R4133715	R4166926	NR	R4111995[53]	-	R4577454	R4577455
N/A	1-1/8 "	R4133719	R4133718	R4166926	NR	R4111634[53]	N/A	R4577452	R4577453
N/A	1-1/8 "	R4133714	R4133715	R4166926	NR	R4111631[221]	R4122486	R4577452	R4577453
23-122700-002[9]	2-1/2 "	R424244X	R424244X[37]	60050266	69270757[41]	R4111992[214]	R4122386	R4577452	R4577453
23-122703-002[186]	2-7/8 "	60050145X	60050145X[37]	60050146	69270702[41]	R4111992[214]	R4122386	R4577452	R4577453
23-122691-002[188]	2-7/8 "	60050145X	60050145X[37]	60050146	69270702[41]	R4111992[214]	R4122386	R4577452	R4577453
N/A	1-1/4 "	R4133581	R4133581	R4166923	NR	R4111992[214]	R4122386	R4577452	R4577453
N/A	1-1/4 "	R4133720	R4133721	R4166923	NR	R4111630[222]	N/A	R4577452	R4577453
N/A	1-1/2 "	R4033607	R4033607	R4166818	NR	-	-	R4577147	R4577147
N/A	1-5/8 "	R4133338	R4133338	R4166689	NR	-	-	R4577147	R4577147
N/A	1-5/8 "	R4133338	R4133338	R4166689	NR	-	-	R4577147	R4577147
N/A	1-3/4 "	R4133400	R4133400	R4166917	NR	-	-	R4577147	R4577147
N/A	1-5/8 "	201185	201186[329]	SP7895S	NR	-	-	R4577147	R4577147
N/A	1-5/8 "	201181	201182	SP7895S	NR	-	-	R4577147	R4577147
N/A	1-5/8 "	201185	201186[329]	SP7895S	NR	-	-	R4577147	R4577147
N/A	1-5/8 "	201181	201182	SP7895S	NR	-	-	R4577147	R4577147
N/A	1.09375	R4133484	R4133485	R4166819	NR	R4111629[53]	R4122484	R4577460	R4577460
N/A	1-1/8 "	R4133716	R4133717	R4166926	NR	R4111772[53]	R4122488	R4577454	R4577455
N/A	1-1/8 "	R4133714	R4133715	R4166926	NR	R4111995[53]	-	R4577454	R4577455
N/A	1-1/8 "	R4133719	R4133718	R4166926	NR	R4111634[53]	N/A	R4577452	R4577453
N/A	1-1/8 "	R4133714	R4133715	R4166926	NR	R4111631[221]	R4122486	R4577452	R4577453
23-122700-002[9]	2-1/2 "	R424244X	R424244X[37]	60050266	69270757[41]	R4111992[214]	R4122386	R4577452	R4577453
23-122703-002[186]	2-7/8 "	60050145X	60050145X[37]	60050146	69270702[41]	R4111992[214]	R4122386	R4577452	R4577453
23-122691-002[188]	2-7/8 "	60050145X	60050145X[37]	60050146	69270702[41]	R4111992[214]	R4122386	R4577452	R4577453
N/A	1-1/4 "	R4133720	R4133721	R4166923	NR	R4111630[222]	N/A	R4577452	R4577453
N/A	1-1/4 "	R4133581	R4133581	R4166923	NR	R4111992[214]	R4122386	R4577452	R4577453
N/A	1-1/2 "	R4033607	R4033607	R4166818	NR	-	-	R4577147	R4577147
N/A	1-5/8 "	R4133338	R4133338	R4166689	NR	-	-	R4577147	R4577147
N/A	1-5/8 "	R4133338	R4133338	R4166689	NR	-	-	R4577147	R4577147
N/A	1-3/4 "	R4133400	R4133400	R4166917	NR	-	-	R4577147	R4577147
N/A	1-5/8 "	201181	201182	SP7895S	NR	-	-	R4577147	R4577147
N/A	1-5/8 "	201185	201186[329]	SP7895S	NR	-	-	R4577147	R4577147

329 - Forward

340 - Use 69160457 for Disc Pad Retainer Clip

341 - Use 69160445 for Disc Pad Retainer Clip

MAKE MODEL YEAR AXLE CODE AXLE WEIGHT	AXLE & BRK. TYPE	BRK. MFG.	BRAKE SIZE	FMSI	MERITOR DISC PAD OR BRAKE SHOE	MERITOR GUIDE PIN OR RETURN SPRING KIT	MERITOR CALIPER HWD. KIT OR RETURN SPRING KIT	MERITOR ADJUSTER KIT (LEFT WHEEL)	MERITOR ADJUSTER KIT (RIGHT WHEEL)
FORD(Cont.)									
L800 SERIES: LOUISVILLE CONVENTIONAL 106.4 BBC TILT HOOD CHASSIS CAB TRUCK(Cont.)									
1976									
	Ra	LG	15 " x 7 "	4505A - 544	N/A	R40H618	NR	NR	NR
	Ra	LG	15 " x 7 "	4505A - 544	N/A	R40H618	NR	SP7888S	SP7888S
F050, F055, F060	Fa	KH	14 " x 2-1/2 "	2060 - 361	Discontinued	R40H596	R40H9219	R40H3536	R40H3537
F070	Fa	WG	15 " x 3 "	1245C - 321	R700321	R40H521	R40H9237	R40H3502	R40H3503
	Fa	WG	15 " x 3 "	1245C - 321	R700321	R40H521	R40H9237	R40H3502	R40H3503
	Fa	WG	15 " x 3 "	1245C - 321	R700321	R40H521	R40H9237	R40H3502	R40H3503
	Fa	WG	15 " x 3 "	1245C - 321	R700321	R40H521	R40H9237	R40H3502	R40H3503
	Fd	DN		7141 - D224	MD224[340]	69310693	60050153	NR	NR
F080, F090	Fd	DN		7149 - D236	MD236[341]	69310693	R40H5523	NR	NR
	Fd	DN		7149 - D236	MD236[341]	69310693	R40H5523	NR	NR
F090, F120	Fa	WG	15 " x 3 "	1245C - 321	R700321	R40H521	R40H9237	R40H3502	R40H3503
	Fa	WG	15 " x 3 "	1245C - 321	R700321	R40H521	R40H9237	R40H3502	R40H3503
R170, R175	Ra	KH	15 " x 5 "	4646 - 400	R700400	R40H595	R40H9220	R40H3538	R40H3539
	Ra	WG	15 " x 5 "	1252 - 346	R700346	R40H597	R40H9200	R40H3540	R40H3541
R185	Ra	WG	15 " x 6 "	4596 - 381	R700381	R40H597	R40H9200	R40H3540	R40H3541
	Ra	WG	15 " x 7 "	4597 - 383	R700383	R40H597	R40H9200	R40H3540	R40H3541
1975									
	Ra	LG	15 " x 6 "	4504A - 543	N/A	R40H618	NR	SP7888S	SP7888S
	Ra	LG	15 " x 6 "	4504A - 543	N/A	R40H618	NR	NR	NR
	Ra	LG	15 " x 7 "	4505A - 544	N/A	R40H618	NR	SP7888S	SP7888S
	Ra	LG	15 " x 7 "	4505A - 544	N/A	R40H618	NR	NR	NR
F050, F055, F060	Fa	KH	14 " x 2-1/2 "	2060 - 361	Discontinued	R40H596	R40H9219	R40H3536	R40H3537
F070	Fa	WG	15 " x 3 "	1245C - 321	R700321	R40H521	R40H9237	R40H3502	R40H3503
	Fa	WG	15 " x 3 "	1245C - 321	R700321	R40H521	R40H9237	R40H3502	R40H3503
	Fa	WG	15 " x 3 "	1245C - 321	R700321	R40H521	R40H9237	R40H3502	R40H3503
	Fa	WG	15 " x 3 "	1245C - 321	R700321	R40H521	R40H9237	R40H3502	R40H3503
	Fd	DN		7141 - D224	MD224[340]	69310693	60050153	NR	NR
F080, F090	Fd	DN		7149 - D236	MD236[341]	69310693	R40H5523	NR	NR
	Fd	DN		7149 - D236	MD236[341]	69310693	R40H5523	NR	NR
F090, F120	Fa	WG	15 " x 3 "	1245C - 321	R700321	R40H521	R40H9237	R40H3502	R40H3503
	Fa	WG	15 " x 3 "	1245C - 321	R700321	R40H521	R40H9237	R40H3502	R40H3503
R170, R175	Ra	KH	15 " x 5 "	4646 - 400	R700400	R40H595	R40H9220	R40H3538	R40H3539
	Ra	WG	15 " x 5 "	1252 - 346	R700346	R40H597	R40H9200	R40H3540	R40H3541
R185	Ra	WG	15 " x 6 "	4596 - 381	R700381	R40H597	R40H9200	R40H3540	R40H3541
	Ra	WG	15 " x 7 "	4597 - 383	R700383	R40H597	R40H9200	R40H3540	R40H3541
1974									
	Ra	LG	15 " x 6 "	4504A - 543	N/A	R40H618	NR	NR	NR
	Ra	LG	15 " x 6 "	4504A - 543	N/A	R40H618	NR	SP7888S	SP7888S
	Ra	LG	15 " x 7 "	4505A - 544	N/A	R40H618	NR	SP7888S	SP7888S
	Ra	LG	15 " x 7 "	4505A - 544	N/A	R40H618	NR	NR	NR
F050, F055, F060	Fa	KH	14 " x 2-1/2 "	2060 - 361	Discontinued	R40H596	R40H9219	R40H3536	R40H3537
F070	Fa	WG	15 " x 3 "	1245C - 321	R700321	R40H521	R40H9237	R40H3502	R40H3503
	Fa	WG	15 " x 3 "	1245C - 321	R700321	R40H521	R40H9237	R40H3502	R40H3503
	Fa	WG	15 " x 3 "	1245C - 321	R700321	R40H521	R40H9237	R40H3502	R40H3503
	Fa	WG	15 " x 3 "	1245C - 321	R700321	R40H521	R40H9237	R40H3502	R40H3503
	Fd	DN		7141 - D224	MD224[340]	69310693	60050153	NR	NR
F080, F090	Fd	DN		7149 - D236	MD236[341]	69310693	R40H5523	NR	NR
	Fd	DN		7149 - D236	MD236[341]	69310693	R40H5523	NR	NR
F090, F120	Fa	WG	15 " x 3 "	1245C - 321	R700321	R40H521	R40H9237	R40H3502	R40H3503
	Fa	WG	15 " x 3 "	1245C - 321	R700321	R40H521	R40H9237	R40H3502	R40H3503
R170, R175	Ra	KH	15 " x 5 "	4646 - 400	R700400	R40H595	R40H9220	R40H3538	R40H3539
	Ra	WG	15 " x 5 "	1252 - 346	R700346	R40H597	R40H9200	R40H3540	R40H3541
R185	Ra	WG	15 " x 6 "	4596 - 381	R700381	R40H597	R40H9200	R40H3540	R40H3541
	Ra	WG	15 " x 7 "	4597 - 383	R700383	R40H597	R40H9200	R40H3540	R40H3541
1973									
	Ra	LG	15 " x 6 "	4504A - 543	N/A	R40H618	NR	SP7888S	SP7888S
	Ra	LG	15 " x 6 "	4504A - 543	N/A	R40H618	NR	NR	NR
	Ra	LG	15 " x 7 "	4505A - 544	N/A	R40H618	NR	SP7888S	SP7888S
	Ra	LG	15 " x 7 "	4505A - 544	N/A	R40H618	NR	NR	NR
F050, F055, F060	Fa	KH	14 " x 2-1/2 "	2060 - 361	Discontinued	R40H596	R40H9219	R40H3536	R40H3537
F070	Fa	WG	15 " x 3 "	1245C - 321	R700321	R40H521	R40H9237	R40H3502	R40H3503
	Fa	WG	15 " x 3 "	1245C - 321	R700321	R40H521	R40H9237	R40H3502	R40H3503
	Fa	WG	15 " x 3 "	1245C - 321	R700321	R40H521	R40H9237	R40H3502	R40H3503

9 - 6 Stud, Dayton Rotor, Hat Style
53 - Power Brakes
214 - Power Brakes, Split System
37 - Also available as a New unit
186 - 10 Stud
221 - Power Brakes, 17,500 or 18,500 lb. Rear Axle
41 - Aluminum piston
188 - 6 Stud, 9.251" Hub
222 - Power Brakes, 18,500 or 22,000 lb. Rear Axle

MERITOR DRUM OR ROTOR NO.	CALIPER OR CYLINDER BORE SIZE	MERITOR CALIPER OR WHEEL CYLINDER (LEFT)	MERITOR CALIPER OR WHEEL CYLINDER (RIGHT)	MERITOR CALIPER OR WHEEL CYLINDER REPAIR KIT	MERITOR CALIPER PISTON	MERITOR MASTER CYLINDER	MERITOR MASTER CYLINDER KIT	MERITOR BRAKE HOSE (LEFT)	MERITOR BRAKE HOSE (RIGHT)
									FORD(Cont.)
L800 SERIES: LOUISVILLE CONVENTIONAL 106.4 BBC TILT HOOD CHASSIS CAB TRUCK(Cont.)									
N/A	1-5/8 "	201181	201182	SP7895S	NR	-	-	R4577147	R4577147
N/A	1-5/8 "	201185	201186[329]	SP7895S	NR	-	-	R4577147	R4577147
N/A	1.09375	R4133484	R4133485	R4166819	NR	R4111629[53]	R4122484	R4577460	R4577460
N/A	1-1/8 "	R4133714	R4133715	R4166926	NR	R4111631[221]	R4122486	R4577452	R4577453
N/A	1-1/8 "	R4133714	R4133715	R4166926	NR	R4111995[53]	-	R4577454	R4577455
N/A	1-1/8 "	R4133719	R4133718	R4166926	NR	R4111634[53]	N/A	R4577452	R4577453
N/A	1-1/8 "	R4133716	R4133717	R4166926	NR	R4111772[53]	R4122488	R4577454	R4577455
23-122700-002[9]	2-1/2 "	R424244X	R424244X[37]	60050266	69270757[41]	R4111992[214]	R4122386	R4577452	R4577453
23-122691-002[188]	2-7/8 "	60050145X	60050145X[37]	60050146	69270702[41]	R4111992[214]	R4122386	R4577452	R4577453
23-122703-002[186]	2-7/8 "	60050145X	60050145X[37]	60050146	69270702[41]	R4111992[214]	R4122386	R4577452	R4577453
N/A	1-1/4 "	R4133720	R4133721	R4166923	NR	R4111630[222]	N/A	R4577452	R4577453
N/A	1-1/4 "	R4133581	R4133581	R4166923	NR	R4111992[214]	R4122386	R4577452	R4577453
N/A	1-1/2 "	R4033607	R4033607	R4166818	NR	-	-	R4577147	R4577147
N/A	1-5/8 "	R4133338	R4133338	R4166689	NR	-	-	R4577147	R4577147
N/A	1-5/8 "	R4133338	R4133338	R4166689	NR	-	-	R4577147	R4577147
N/A	1-3/4 "	R4133400	R4133400	R4166917	NR	-	-	R4577147	R4577147
N/A	1-5/8 "	201185	201186[329]	SP7895S	NR	-	-	R4577147	R4577147
N/A	1-5/8 "	201181	201182	SP7895S	NR	-	-	R4577147	R4577147
N/A	1-5/8 "	201185	201186[329]	SP7895S	NR	-	-	R4577147	R4577147
N/A	1-5/8 "	201181	201182	SP7895S	NR	-	-	R4577147	R4577147
N/A	1.09375	R4133484	R4133485	R4166819	NR	R4111629[53]	R4122484	R4577460	R4577460
N/A	1-1/8 "	R4133719	R4133718	R4166926	NR	R4111634[53]	N/A	R4577452	R4577453
N/A	1-1/8 "	R4133714	R4133715	R4166926	NR	R4111995[53]	-	R4577454	R4577455
N/A	1-1/8 "	R4133716	R4133717	R4166926	NR	R4111772[53]	R4122488	R4577454	R4577455
N/A	1-1/8 "	R4133714	R4133715	R4166926	NR	R4111631[221]	R4122486	R4577452	R4577453
23-122700-002[9]	2-1/2 "	R424244X	R424244X[37]	60050266	69270757[41]	R4111992[214]	R4122386	R4577452	R4577453
23-122703-002[186]	2-7/8 "	60050145X	60050145X[37]	60050146	69270702[41]	R4111992[214]	R4122386	R4577452	R4577453
23-122691-002[188]	2-7/8 "	60050145X	60050145X[37]	60050146	69270702[41]	R4111992[214]	R4122386	R4577452	R4577453
N/A	1-1/4 "	R4133720	R4133721	R4166923	NR	R4111630[222]	N/A	R4577452	R4577453
N/A	1-1/4 "	R4133581	R4133581	R4166923	NR	R4111992[214]	R4122386	R4577452	R4577453
N/A	1-1/2 "	R4033607	R4033607	R4166818	NR	-	-	R4577147	R4577147
N/A	1-5/8 "	R4133338	R4133338	R4166689	NR	-	-	R4577147	R4577147
N/A	1-5/8 "	R4133338	R4133338	R4166689	NR	-	-	R4577147	R4577147
N/A	1-3/4 "	R4133400	R4133400	R4166917	NR	-	-	R4577147	R4577147
N/A	1-5/8 "	201181	201182	SP7895S	NR	-	-	R4577147	R4577147
N/A	1-5/8 "	201185	201186[329]	SP7895S	NR	-	-	R4577147	R4577147
N/A	1-5/8 "	201185	201186[329]	SP7895S	NR	-	-	R4577147	R4577147
N/A	1-5/8 "	201181	201182	SP7895S	NR	-	-	R4577147	R4577147
N/A	1.09375	R4133484	R4133485	R4166819	NR	R4111629[53]	R4122484	R4577460	R4577460
N/A	1-1/8 "	R4133714	R4133715	R4166926	NR	R4111995[53]	-	R4577454	R4577455
N/A	1-1/8 "	R4133714	R4133715	R4166926	NR	R4111631[221]	R4122486	R4577452	R4577453
N/A	1-1/8 "	R4133719	R4133718	R4166926	NR	R4111634[53]	N/A	R4577452	R4577453
N/A	1-1/8 "	R4133716	R4133717	R4166926	NR	R4111772[53]	R4122488	R4577454	R4577455
23-122700-002[9]	2-1/2 "	R424244X	R424244X[37]	60050266	69270757[41]	R4111992[214]	R4122386	R4577452	R4577453
23-122691-002[188]	2-7/8 "	60050145X	60050145X[37]	60050146	69270702[41]	R4111992[214]	R4122386	R4577452	R4577453
23-122703-002[186]	2-7/8 "	60050145X	60050145X[37]	60050146	69270702[41]	R4111992[214]	R4122386	R4577452	R4577453
N/A	1-1/4 "	R4133581	R4133581	R4166923	NR	R4111992[214]	R4122386	R4577452	R4577453
N/A	1-1/4 "	R4133720	R4133721	R4166923	NR	R4111630[222]	N/A	R4577452	R4577453
N/A	1-1/2 "	R4033607	R4033607	R4166818	NR	-	-	R4577147	R4577147
N/A	1-5/8 "	R4133338	R4133338	R4166689	NR	-	-	R4577147	R4577147
N/A	1-5/8 "	R4133338	R4133338	R4166689	NR	-	-	R4577147	R4577147
N/A	1-3/4 "	R4133400	R4133400	R4166917	NR	-	-	R4577147	R4577147
N/A	1-5/8 "	201185	201186[329]	SP7895S	NR	-	-	R4577147	R4577147
N/A	1-5/8 "	201181	201182	SP7895S	NR	-	-	R4577147	R4577147
N/A	1-5/8 "	201185	201186[329]	SP7895S	NR	-	-	R4577147	R4577147
N/A	1-5/8 "	201181	201182	SP7895S	NR	-	-	R4577147	R4577147
N/A	1.09375	R4133484	R4133485	R4166819	NR	R4111629[53]	R4122484	R4577460	R4577460
N/A	1-1/8 "	R4133714	R4133715	R4166926	NR	R4111995[53]	-	R4577454	R4577455
N/A	1-1/8 "	R4133716	R4133717	R4166926	NR	R4111772[53]	R4122488	R4577454	R4577455
N/A	1-1/8 "	R4133719	R4133718	R4166926	NR	R4111634[53]	N/A	R4577452	R4577453

329 - Forward

340 - Use 69160457 for Disc Pad Retainer Clip

341 - Use 69160445 for Disc Pad Retainer Clip

MAKE MODEL YEAR AXLE CODE AXLE WEIGHT	AXLE & BRK. TYPE	BRK. MFG.	BRAKE SIZE	FMSI	MERITOR DISC PAD OR BRAKE SHOE	MERITOR GUIDE PIN OR RETURN SPRING KIT	MERITOR CALIPER HWD. KIT OR RETURN SPRING KIT	MERITOR ADJUSTER KIT (LEFT WHEEL)	MERITOR ADJUSTER KIT (RIGHT WHEEL)
FORD(Cont.)									
L800 SERIES: LOUISVILLE CONVENTIONAL 106.4 BBC TILT HOOD CHASSIS CAB TRUCK(Cont.)									
1973									
	Fa	WG	15 " x 3 "	1245C - 321	R700321	R40H521	R40H9237	R40H3502	R40H3503
	Fd	DN		7141 - D224	MD224[340]	69310693	60050153	NR	NR
F080, F090	Fd	DN		7149 - D236	MD236[341]	69310693	R40H5523	NR	NR
	Fd	DN		7149 - D236	MD236[341]	69310693	R40H5523	NR	NR
F090, F120	Fa	WG	15 " x 3 "	1245C - 321	R700321	R40H521	R40H9237	R40H3502	R40H3503
	Fa	WG	15 " x 3 "	1245C - 321	R700321	R40H521	R40H9237	R40H3502	R40H3503
R170, R175	Ra	KH	15 " x 5 "	4646 - 400	R700400	R40H595	R40H9220	R40H3538	R40H3539
	Ra	WG	15 " x 5 "	1252 - 346	R700346	R40H597	R40H9200	R40H3540	R40H3541
R185	Ra	WG	15 " x 6 "	4596 - 381	R700381	R40H597	R40H9200	R40H3540	R40H3541
	Ra	WG	15 " x 7 "	4597 - 383	R700383	R40H597	R40H9200	R40H3540	R40H3541
LN600 SERIES: LOUISVILLE 94.4 BBC SHORT CONVENTIONAL CHASSIS CAB									
1995									
	Fd	DN		7149 - D236	MD236[341]	69310693	69310782	NR	NR
	Fd	DN		7141 - D224	MD224[340]	69310693	60050153	NR	NR
	Fd	DN		7149 - D236	MD236[341]	69310693	69310782	NR	NR
	Fd	DN		7149 - D236	MD236[341]	69310693	69310782	NR	NR
	Ra	LG	15 " x 5 "	4528A - 542	N/A	R40H618	NR	NR	NR
	Ra	LG	15 " x 5 "	4528A - 542	N/A	R40H618	NR	SP7888S	SP7888S
	Ra	LG	15 " x 6 "	4504A - 543	N/A	R40H618	NR	SP7887S	SP7887S
	Ra	LG	15 " x 6 "	4504A - 543	N/A	R40H618	NR	NR	NR
	Ra	LG	15 " x 7 "	4505A - 544	N/A	R40H618	NR	NR	NR
	Ra	LG	15 " x 7 "	4505A - 544	N/A	R40H618	NR	SP7887S	SP7887S
1994									
	Fd	DN		7149 - D236	MD236[341]	69310693	69310782	NR	NR
	Fd	DN		7149 - D236	MD236[341]	69310693	69310782	NR	NR
	Fd	DN		7141 - D224	MD224[340]	69310693	60050153	NR	NR
	Fd	DN		7149 - D236	MD236[341]	69310693	69310782	NR	NR
	Ra	LG	15 " x 5 "	4528A - 542	N/A	R40H618	NR	SP7888S	SP7888S
	Ra	LG	15 " x 5 "	4528A - 542	N/A	R40H618	NR	NR	NR
	Ra	LG	15 " x 6 "	4504A - 543	N/A	R40H618	NR	SP7887S	SP7887S
	Ra	LG	15 " x 6 "	4504A - 543	N/A	R40H618	NR	NR	NR
	Ra	LG	15 " x 7 "	4505A - 544	N/A	R40H618	NR	NR	NR
	Ra	LG	15 " x 7 "	4505A - 544	N/A	R40H618	NR	SP7887S	SP7887S
1993									
	Fd	DN		7141 - D224	MD224[340]	69310693	60050153	NR	NR
	Fd	DN		7149 - D236	MD236[341]	69310693	69310782	NR	NR
	Fd	DN		7149 - D236	MD236[341]	69310693	69310782	NR	NR
	Fd	DN		7149 - D236	MD236[341]	69310693	69310782	NR	NR
	Ra	LG	15 " x 5 "	4528A - 542	N/A	R40H618	NR	SP7888S	SP7888S
	Ra	LG	15 " x 5 "	4528A - 542	N/A	R40H618	NR	NR	NR
	Ra	LG	15 " x 6 "	4504A - 543	N/A	R40H618	NR	NR	NR
	Ra	LG	15 " x 6 "	4504A - 543	N/A	R40H618	NR	SP7887S	SP7887S
	Ra	LG	15 " x 7 "	4505A - 544	N/A	R40H618	NR	SP7887S	SP7887S
	Ra	LG	15 " x 7 "	4505A - 544	N/A	R40H618	NR	NR	NR
1992									
	Fd	DN		7141 - D224	MD224[340]	69310693	60050153	NR	NR
	Fd	DN		7149 - D236	MD236[341]	69310693	69310782	NR	NR
	Fd	DN		7149 - D236	MD236[341]	69310693	69310782	NR	NR
	Fd	DN		7149 - D236	MD236[341]	69310693	69310782	NR	NR
	Ra	LG	15 " x 5 "	4528A - 542	N/A	R40H618	NR	SP7888S	SP7888S
	Ra	LG	15 " x 5 "	4528A - 542	N/A	R40H618	NR	NR	NR
	Ra	LG	15 " x 6 "	4504A - 543	N/A	R40H618	NR	NR	NR
	Ra	LG	15 " x 6 "	4504A - 543	N/A	R40H618	NR	SP7887S	SP7887S
	Ra	LG	15 " x 7 "	4505A - 544	N/A	R40H618	NR	NR	NR
	Ra	LG	15 " x 7 "	4505A - 544	N/A	R40H618	NR	SP7887S	SP7887S
1991									
	Fd	DN		7149 - D236	MD236[341]	69310693	69310782	NR	NR
	Fd	DN		7149 - D236	MD236[341]	69310693	69310782	NR	NR
	Fd	DN		7149 - D236	MD236[341]	69310693	69310782	NR	NR
	Fd	DN		7141 - D224	MD224[340]	69310693	60050153	NR	NR
	Ra	LG	15 " x 5 "	4528A - 542	N/A	R40H618	NR	SP7888S	SP7888S
	Ra	LG	15 " x 5 "	4528A - 542	N/A	R40H618	NR	NR	NR
	Ra	LG	15 " x 6 "	4504A - 543	N/A	R40H618	NR	NR	NR

9 - 6 Stud, Dayton Rotor, Hat Style
186 - 10 Stud
204 - Right Hand; use E-4057 for Left Hand Expander Kits
37 - Also available as a New unit
187 - 6 Stud, 6.443" Hub
214 - Power Brakes, Split System
41 - Aluminum piston
188 - 6 Stud, 9.251" Hub
221 - Power Brakes, 17,500 or 18,500 lb. Rear Axle

MERITOR DRUM OR ROTOR NO.	CALIPER OR CYLINDER BORE SIZE	MERITOR CALIPER OR WHEEL CYLINDER (LEFT)	MERITOR CALIPER OR WHEEL CYLINDER (RIGHT)	MERITOR CALIPER OR WHEEL CYLINDER REPAIR KIT	MERITOR CALIPER PISTON	MERITOR MASTER CYLINDER	MERITOR MASTER CYLINDER KIT	MERITOR BRAKE HOSE (LEFT)	MERITOR BRAKE HOSE (RIGHT)
									FORD(Cont.)
L800 SERIES: LOUISVILLE CONVENTIONAL 106.4 BBC TILT HOOD CHASSIS CAB TRUCK(Cont.)									
N/A	1-1/8 "	R4133714	R4133715	R4166926	NR	R4111631[221]	R4122486	R4577452	R4577453
23-122700-002[9]	2-1/2 "	R424244X	R424244X[37]	60050266	69270757[41]	R4111992[214]	R4122386	R4577452	R4577453
23-122691-002[188]	2-7/8 "	60050145X	60050145X[37]	60050146	69270702[41]	R4111992[214]	R4122386	R4577452	R4577453
23-122703-002[186]	2-7/8 "	60050145X	60050145X[37]	60050146	69270702[41]	R4111992[214]	R4122386	R4577452	R4577453
N/A	1-1/4 "	R4133720	R4133721	R4166923	NR	R4111630[222]	N/A	R4577452	R4577453
N/A	1-1/4 "	R4133581	R4133581	R4166923	NR	R4111992[214]	R4122386	R4577452	R4577453
N/A	1-1/2 "	R4033607	R4033607	R4166818	NR	-	-	R4577147	R4577147
N/A	1-5/8 "	R4133338	R4133338	R4166689	NR	-	-	R4577147	R4577147
N/A	1-5/8 "	R4133338	R4133338	R4166689	NR	-	-	R4577147	R4577147
N/A	1-3/4 "	R4133400	R4133400	R4166917	NR	-	-	R4577147	R4577147
LN600 SERIES: LOUISVILLE 94.4 BBC SHORT CONVENTIONAL CHASSIS CAB									
23-122691-002[188]	2-7/8 "	60050145X	60050145X[37]	60050146	69270702[41]	-	-	R4577461	R4577461
23-122700-002[9]	2-1/2 "	R424244X	R424244X[37]	60050266	69270757[41]	-	-	R4577461	R4577461
23-122703-002[186]	2-7/8 "	60050145X	60050145X[37]	60050146	69270702[41]	-	-	R4577461	R4577461
23-122743-002[187]	2-7/8 "	60050145X	60050145X[37]	60050146	69270702[41]	-	-	R4577461	R4577461
N/A	1-5/8 "	201181	201182	SP7895S	NR	-	-	R4577870	R4577870
N/A	1-5/8 "	201185	201186[329]	SP7895S	NR	-	-	R4577870	R4577870
N/A	1-3/4 "	201183X	201184X[329]	SP7873S	NR	-	-	R4577870	R4577870
N/A	1-3/4 "	201179X	201180X	SP7873S	SP7880S[204]	-	-	R4577870	R4577870
N/A	1-3/4 "	201179X	201180X	SP7873S	SP7880S[204]	-	-	R4577870	R4577870
N/A	1-3/4 "	201183X	201184X[329]	SP7873S	NR	-	-	R4577870	R4577870
23-122743-002[187]	2-7/8 "	60050145X	60050145X[37]	60050146	69270702[41]	-	-	R4577461	R4577461
23-122703-002[186]	2-7/8 "	60050145X	60050145X[37]	60050146	69270702[41]	-	-	R4577461	R4577461
23-122700-002[9]	2-1/2 "	R424244X	R424244X[37]	60050266	69270757[41]	-	-	R4577461	R4577461
23-122691-002[188]	2-7/8 "	60050145X	60050145X[37]	60050146	69270702[41]	-	-	R4577461	R4577461
N/A	1-5/8 "	201185	201186[329]	SP7895S	NR	-	-	R4577870	R4577870
N/A	1-5/8 "	201181	201182	SP7895S	NR	-	-	R4577870	R4577870
N/A	1-3/4 "	201183X	201184X[329]	SP7873S	NR	-	-	R4577870	R4577870
N/A	1-3/4 "	201179X	201180X	SP7873S	SP7880S[204]	-	-	R4577870	R4577870
N/A	1-3/4 "	201179X	201180X	SP7873S	SP7880S[204]	-	-	R4577870	R4577870
N/A	1-3/4 "	201183X	201184X[329]	SP7873S	NR	-	-	R4577870	R4577870
23-122700-002[9]	2-1/2 "	R424244X	R424244X[37]	60050266	69270757[41]	-	-	R4577461	R4577461
23-122703-002[186]	2-7/8 "	60050145X	60050145X[37]	60050146	69270702[41]	-	-	R4577461	R4577461
23-122691-002[188]	2-7/8 "	60050145X	60050145X[37]	60050146	69270702[41]	-	-	R4577461	R4577461
23-122743-002[187]	2-7/8 "	60050145X	60050145X[37]	60050146	69270702[41]	-	-	R4577461	R4577461
N/A	1-5/8 "	201185	201186[329]	SP7895S	NR	-	-	R4577870	R4577870
N/A	1-5/8 "	201181	201182	SP7895S	NR	-	-	R4577870	R4577870
N/A	1-3/4 "	201179X	201180X	SP7873S	SP7880S[204]	-	-	R4577870	R4577870
N/A	1-3/4 "	201183X	201184X[329]	SP7873S	NR	-	-	R4577870	R4577870
N/A	1-3/4 "	201179X	201180X	SP7873S	SP7880S[204]	-	-	R4577870	R4577870
N/A	1-3/4 "	201183X	201184X[329]	SP7873S	NR	-	-	R4577870	R4577870
23-122700-002[9]	2-1/2 "	R424244X	R424244X[37]	60050266	69270757[41]	-	-	R4577461	R4577461
23-122691-002[188]	2-7/8 "	60050145X	60050145X[37]	60050146	69270702[41]	-	-	R4577461	R4577461
23-122703-002[186]	2-7/8 "	60050145X	60050145X[37]	60050146	69270702[41]	-	-	R4577461	R4577461
23-122743-002[187]	2-7/8 "	60050145X	60050145X[37]	60050146	69270702[41]	-	-	R4577461	R4577461
N/A	1-5/8 "	201185	201186[329]	SP7895S	NR	-	-	R4577870	R4577870
N/A	1-5/8 "	201181	201182	SP7895S	NR	-	-	R4577870	R4577870
N/A	1-3/4 "	201179X	201180X	SP7873S	SP7880S[204]	-	-	R4577870	R4577870
N/A	1-3/4 "	201183X	201184X[329]	SP7873S	NR	-	-	R4577870	R4577870
N/A	1-3/4 "	201179X	201180X	SP7873S	SP7880S[204]	-	-	R4577870	R4577870
N/A	1-3/4 "	201183X	201184X[329]	SP7873S	NR	-	-	R4577870	R4577870
23-122691-002[188]	2-7/8 "	60050145X	60050145X[37]	60050146	69270702[41]	-	-	R4577461	R4577461
23-122743-002[187]	2-7/8 "	60050145X	60050145X[37]	60050146	69270702[41]	-	-	R4577461	R4577461
23-122703-002[186]	2-7/8 "	60050145X	60050145X[37]	60050146	69270702[41]	-	-	R4577461	R4577461
23-122700-002[9]	2-1/2 "	R424244X	R424244X[37]	60050266	69270757[41]	-	-	R4577461	R4577461
N/A	1-5/8 "	201185	201186[329]	SP7895S	NR	-	-	R4577870	R4577870
N/A	1-5/8 "	201181	201182	SP7895S	NR	-	-	R4577870	R4577870
N/A	1-3/4 "	201179X	201180X	SP7873S	SP7880S[204]	-	-	R4577870	R4577870

222 - Power Brakes, 18,500 or 22,000 lb. Rear Axle
329 - Forward
340 - Use 69160457 for Disc Pad Retainer Clip
341 - Use 69160445 for Disc Pad Retainer Clip

MAKE MODEL YEAR AXLE CODE AXLE WEIGHT	AXLE & BRK. TYPE	BRK. MFG.	BRAKE SIZE	FMSI	MERITOR DISC PAD OR BRAKE SHOE	MERITOR GUIDE PIN OR RETURN SPRING KIT	MERITOR CALIPER HWD. KIT OR RETURN SPRING KIT	MERITOR ADJUSTER KIT (LEFT WHEEL)	MERITOR ADJUSTER KIT (RIGHT WHEEL)
FORD(Cont.)									
LN600 SERIES: LOUISVILLE 94.4 BBC SHORT CONVENTIONAL CHASSIS CAB(Cont.)									
1991									
	Ra	LG	15 " x 6 "	4504A - 543	N/A	R40H618	NR	SP7887S	SP7887S
	Ra	LG	15 " x 7 "	4505A - 544	N/A	R40H618	NR	SP7887S	SP7887S
	Ra	LG	15 " x 7 "	4505A - 544	N/A	R40H618	NR	NR	NR
1990									
	Fd	DN		7149 - D236	MD236[341]	69310693	69310782	NR	NR
	Fd	DN		7141 - D224	MD224[340]	69310693	60050153	NR	NR
	Fd	DN		7149 - D236	MD236[341]	69310693	69310782	NR	NR
	Fd	DN		7149 - D236	MD236[341]	69310693	69310782	NR	NR
	Ra	LG	15 " x 5 "	4528A - 542	N/A	R40H618	NR	NR	NR
	Ra	LG	15 " x 5 "	4528A - 542	N/A	R40H618	NR	SP7888S	SP7888S
	Ra	LG	15 " x 6 "	4504A - 543	N/A	R40H618	NR	SP7887S	SP7887S
	Ra	LG	15 " x 6 "	4504A - 543	N/A	R40H618	NR	NR	NR
	Ra	LG	15 " x 7 "	4505A - 544	N/A	R40H618	NR	SP7887S	SP7887S
	Ra	LG	15 " x 7 "	4505A - 544	N/A	R40H618	NR	NR	NR
1989									
	Fd	DN		7141 - D224	MD224[340]	69310693	60050153	NR	NR
	Fd	DN		7149 - D236	MD236[341]	69310693	69310782[43]	NR	NR
	Fd	DN		7149 - D236	MD236[341]	69310693	69310782[43]	NR	NR
	Fd	DN		7149 - D236	MD236[341]	69310693	69310782[43]	NR	NR
	Ra	LG	15 " x 5 "	4528A - 542	N/A	R40H618	NR	SP7888S	SP7888S
	Ra	LG	15 " x 5 "	4528A - 542	N/A	R40H618	NR	NR	NR
	Ra	LG	15 " x 6 "	4504A - 543	N/A	R40H618	NR	SP7887S	SP7887S
	Ra	LG	15 " x 6 "	4504A - 543	N/A	R40H618	NR	NR	NR
	Ra	LG	15 " x 7 "	4505A - 544	N/A	R40H618	NR	NR	NR
	Ra	LG	15 " x 7 "	4505A - 544	N/A	R40H618	NR	SP7887S	SP7887S
1988									
	Fd	DN		7149 - D236	MD236[341]	69310693	69310782[43]	NR	NR
	Fd	DN		7149 - D236	MD236[341]	69310693	69310782[43]	NR	NR
	Fd	DN		7141 - D224	MD224[340]	69310693	60050153	NR	NR
	Fd	DN		7149 - D236	MD236[341]	69310693	69310782[43]	NR	NR
	Ra	LG	15 " x 5 "	4528A - 542	N/A	R40H618	NR	SP7888S	SP7888S
	Ra	LG	15 " x 5 "	4528A - 542	N/A	R40H618	NR	NR	NR
	Ra	LG	15 " x 6 "	4504A - 543	N/A	R40H618	NR	NR	NR
	Ra	LG	15 " x 6 "	4504A - 543	N/A	R40H618	NR	SP7887S	SP7887S
	Ra	LG	15 " x 7 "	4505A - 544	N/A	R40H618	NR	NR	NR
	Ra	LG	15 " x 7 "	4505A - 544	N/A	R40H618	NR	SP7887S	SP7887S
1987									
	Fd	DN		7141 - D224	MD224[340]	69310693	60050153	NR	NR
	Fd	DN		7149 - D236	MD236[341]	69310693	69310782[43]	NR	NR
	Fd	DN		7149 - D236	MD236[341]	69310693	69310782[43]	NR	NR
	Fd	DN		7149 - D236	MD236[341]	69310693	69310782[43]	NR	NR
	Ra	LG	15 " x 5 "	4528A - 542	N/A	R40H618	NR	SP7888S	SP7888S
	Ra	LG	15 " x 5 "	4528A - 542	N/A	R40H618	NR	NR	NR
	Ra	LG	15 " x 6 "	4504A - 543	N/A	R40H618	NR	SP7887S	SP7887S
	Ra	LG	15 " x 6 "	4504A - 543	N/A	R40H618	NR	NR	NR
	Ra	LG	15 " x 7 "	4505A - 544	N/A	R40H618	NR	SP7887S	SP7887S
	Ra	LG	15 " x 7 "	4505A - 544	N/A	R40H618	NR	NR	NR
1986									
	Fd	DN		7149 - D236	MD236[341]	69310693	69310782	NR	NR
	Fd	DN		7149 - D236	MD236[341]	69310693	69310782	NR	NR
	Fd	DN		7149 - D236	MD236[341]	69310693	69310782	NR	NR
	Fd	DN		7141 - D224	MD224[340]	69310693	60050153	NR	NR
	Ra	LG	15 " x 5 "	4528A - 542	N/A	R40H618	NR	NR	NR
	Ra	LG	15 " x 5 "	4528A - 542	N/A	R40H618	NR	SP7888S	SP7888S
	Ra	LG	15 " x 6 "	4504A - 543	N/A	R40H618	NR	SP7887S	SP7887S
	Ra	LG	15 " x 6 "	4504A - 543	N/A	R40H618	NR	NR	NR
	Ra	LG	15 " x 6 "	4504A - 543	N/A	R40H618	NR	NR	NR
	Ra	LG	15 " x 6 "	4504A - 543	N/A	R40H618	NR	SP7887S	SP7887S
	Ra	LG	15 " x 7 "	4505A - 544	N/A	R40H618	NR	SP7887S	SP7887S
	Ra	LG	15 " x 7 "	4505A - 544	N/A	R40H618	NR	NR	NR
	Ra	LG	15 " x 7 "	4505A - 544	N/A	R40H618	NR	SP7887S	SP7887S
	Ra	LG	15 " x 7 "	4505A - 544	N/A	R40H618	NR	NR	NR
F050, F055, F060	Fa	KH	14 " x 2-1/2 "	2060 - 361	Discontinued	R40H596	R40H9219	R40H3536	R40H3537
F070	Fa	WG	15 " x 3 "	1245C - 321	R700321	R40H521	R40H9237	R40H3502	R40H3503

9 - 6 Stud, Dayton Rotor, Hat Style
43 - For Applications Taking A Longer Shim, Use R404151706
187 - 6 Stud, 6.443" Hub
37 - Also available as a New unit
53 - Power Brakes
188 - 6 Stud, 9.251" Hub
41 - Aluminum piston
186 - 10 Stud
204 - Right Hand; use E-4057 for Left Hand Expander Kits

MERITOR DRUM OR ROTOR NO.	CALIPER OR CYLINDER BORE SIZE	MERITOR CALIPER OR WHEEL CYLINDER (LEFT)	MERITOR CALIPER OR WHEEL CYLINDER (RIGHT)	MERITOR CALIPER OR WHEEL CYLINDER REPAIR KIT	MERITOR CALIPER PISTON	MERITOR MASTER CYLINDER	MERITOR MASTER CYLINDER KIT	MERITOR BRAKE HOSE (LEFT)	MERITOR BRAKE HOSE (RIGHT)
									FORD(Cont.)
LN600 SERIES: LOUISVILLE 94.4 BBC SHORT CONVENTIONAL CHASSIS CAB(Cont.)									
N/A	1-3/4 "	201183X	201184X[329]	SP7873S	NR	-	-	R4577870	R4577870
N/A	1-3/4 "	201183X	201184X[329]	SP7873S	NR	-	-	R4577870	R4577870
N/A	1-3/4 "	201179X	201180X	SP7873S	SP7880S[204]	-	-	R4577870	R4577870
23-122691-002[188]	2-7/8 "	60050145X	60050145X[37]	60050146	69270702[41]	R4111999[53]	R4122386	R4577461	R4577461
23-122700-002[9]	2-1/2 "	R424244X	R424244X[37]	60050266	69270757[41]	R4111999[53]	R4122386	R4577461	R4577461
23-122743-002[187]	2-7/8 "	60050145X	60050145X[37]	60050146	69270702[41]	R4111999[53]	R4122386	R4577461	R4577461
23-122703-002[186]	2-7/8 "	60050145X	60050145X[37]	60050146	69270702[41]	R4111999[53]	R4122386	R4577461	R4577461
N/A	1-5/8 "	201181	201182	SP7895S	NR	-	-	R4577870	R4577870
N/A	1-5/8 "	201185	201186[329]	SP7895S	NR	-	-	R4577870	R4577870
N/A	1-3/4 "	201183X	201184X[329]	SP7873S	NR	-	-	R4577870	R4577870
N/A	1-3/4 "	201179X	201180X	SP7873S	SP7880S[204]	-	-	R4577870	R4577870
N/A	1-3/4 "	201183X	201184X[329]	SP7873S	NR	-	-	R4577870	R4577870
N/A	1-3/4 "	201179X	201180X	SP7873S	SP7880S[204]	-	-	R4577870	R4577870
23-122700-002[9]	2-1/2 "	R424244X	R424244X[37]	60050266	69270757[41]	R4111999[53]	R4122386	R4577461	R4577461
23-122691-002[188]	2-7/8 "	60050145X	60050145X[37]	60050146	69270702[41]	R4111999[53]	R4122386	R4577461	R4577461
23-122703-002[186]	2-7/8 "	60050145X	60050145X[37]	60050146	69270702[41]	R4111999[53]	R4122386	R4577461	R4577461
23-122743-002[187]	2-7/8 "	60050145X	60050145X[37]	60050146	69270702[41]	R4111999[53]	R4122386	R4577461	R4577461
N/A	1-5/8 "	201185	201186[329]	SP7895S	NR	-	-	N/A	N/A
N/A	1-5/8 "	201181	201182	SP7895S	NR	-	-	N/A	N/A
N/A	1-3/4 "	201183X	201184X[329]	SP7873S	NR	-	-	N/A	N/A
N/A	1-3/4 "	201179X	201180X	SP7873S	SP7880S[204]	-	-	N/A	N/A
N/A	1-3/4 "	201179X	201180X	SP7873S	SP7880S[204]	-	-	N/A	N/A
N/A	1-3/4 "	201183X	201184X[329]	SP7873S	NR	-	-	N/A	N/A
23-122703-002[186]	2-7/8 "	60050145X	60050145X[37]	60050146	69270702[41]	R4111999[53]	R4122386	R4577461	R4577461
23-122743-002[187]	2-7/8 "	60050145X	60050145X[37]	60050146	69270702[41]	R4111999[53]	R4122386	R4577461	R4577461
23-122700-002[9]	2-1/2 "	R424244X	R424244X[37]	60050266	69270757[41]	R4111999[53]	R4122386	R4577461	R4577461
23-122691-002[188]	2-7/8 "	60050145X	60050145X[37]	60050146	69270702[41]	R4111999[53]	R4122386	R4577461	R4577461
N/A	1-5/8 "	201185	201186[329]	SP7895S	NR	-	-	N/A	N/A
N/A	1-5/8 "	201181	201182	SP7895S	NR	-	-	N/A	N/A
N/A	1-3/4 "	201179X	201180X	SP7873S	SP7880S[204]	-	-	N/A	N/A
N/A	1-3/4 "	201183X	201184X[329]	SP7873S	NR	-	-	N/A	N/A
N/A	1-3/4 "	201179X	201180X	SP7873S	SP7880S[204]	-	-	N/A	N/A
N/A	1-3/4 "	201183X	201184X[329]	SP7873S	NR	-	-	N/A	N/A
23-122700-002[9]	2-1/2 "	R424244X	R424244X[37]	60050266	69270757[41]	R4111999[53]	R4122386	R4577461	R4577461
23-122691-002[188]	2-7/8 "	60050145X	60050145X[37]	60050146	69270702[41]	R4111999[53]	R4122386	R4577461	R4577461
23-122743-002[187]	2-7/8 "	60050145X	60050145X[37]	60050146	69270702[41]	R4111999[53]	R4122386	R4577461	R4577461
23-122703-002[186]	2-7/8 "	60050145X	60050145X[37]	60050146	69270702[41]	R4111999[53]	R4122386	R4577461	R4577461
N/A	1-5/8 "	201185	201186[329]	SP7895S	NR	-	-	N/A	N/A
N/A	1-5/8 "	201181	201182	SP7895S	NR	-	-	N/A	N/A
N/A	1-3/4 "	201183X	201184X[329]	SP7873S	NR	-	-	N/A	N/A
N/A	1-3/4 "	201179X	201180X	SP7873S	SP7880S[204]	-	-	N/A	N/A
N/A	1-3/4 "	201183X	201184X[329]	SP7873S	NR	-	-	N/A	N/A
N/A	1-3/4 "	201179X	201180X	SP7873S	SP7880S[204]	-	-	N/A	N/A
23-122703-002[186]	2-7/8 "	60050145X	60050145X[37]	60050146	69270702[41]	R4111999[53]	R4122386	R4577461	R4577461
23-122743-002[187]	2-7/8 "	60050145X	60050145X[37]	60050146	69270702[41]	R4111999[53]	R4122386	R4577461	R4577461
23-122691-002[188]	2-7/8 "	60050145X	60050145X[37]	60050146	69270702[41]	R4111999[53]	R4122386	R4577461	R4577461
23-122700-002[9]	2-1/2 "	R424244X	R424244X[37]	60050266	69270757[41]	R4111999[53]	R4122386	R4577461	R4577461
N/A	1-5/8 "	201181	201182	SP7895S	NR	-	-	N/A	N/A
N/A	1-5/8 "	201185	201186[329]	SP7895S	NR	-	-	N/A	N/A
N/A	1-3/4 "	201183X	201184X[329]	SP7873S	NR	-	-	N/A	N/A
N/A	1-3/4 "	201179X	201180X	SP7873S	SP7880S[204]	-	-	N/A	N/A
N/A	1-3/4 "	201179X	201180X	SP7873S	SP7880S[204]	-	-	N/A	N/A
N/A	1-3/4 "	201183X	201184X[329]	SP7873S	NR	-	-	N/A	N/A
N/A	1-3/4 "	201183X	201184X[329]	SP7873S	NR	-	-	N/A	N/A
N/A	1-3/4 "	201179X	201180X	SP7873S	SP7880S[204]	-	-	N/A	N/A
N/A	1-3/4 "	201183X	201184X[329]	SP7873S	NR	-	-	N/A	N/A
N/A	1-3/4 "	201179X	201180X	SP7873S	SP7880S[204]	-	-	N/A	N/A
N/A	1.09375	R4133484	R4133485	R4166819	NR	-	-	-	-
N/A	1-1/8 "	R4133716	R4133717	R4166926	NR	-	-	-	-

329 - Forward

340 - Use 69160457 for Disc Pad Retainer Clip

341 - Use 69160445 for Disc Pad Retainer Clip

MAKE MODEL YEAR AXLE CODE AXLE WEIGHT	AXLE & BRK. TYPE	BRK. MFG.	BRAKE SIZE	FMSI	MERITOR DISC PAD OR BRAKE SHOE	MERITOR GUIDE PIN OR RETURN SPRING KIT	MERITOR CALIPER HWD. KIT OR RETURN SPRING KIT	MERITOR ADJUSTER KIT (LEFT WHEEL)	MERITOR ADJUSTER KIT (RIGHT WHEEL)
FORD(Cont.)									
LN600 SERIES: LOUISVILLE 94.4 BBC SHORT CONVENTIONAL CHASSIS CAB(Cont.)									
1986									
	Fa	WG	15 " x 3 "	1245C - 321	R700321	R40H521	R40H9237	R40H3502	R40H3503
	Fd	DN		7141 - D224	MD224[340]	69310693	60050153	NR	NR
F080, F090	Fd	DN		7149 - D236	MD236[341]	69310693	69310782	NR	NR
	Fd	DN		7149 - D236	MD236[341]	69310693	69310782	NR	NR
R170, R175	Ra	KH	15 " x 5 "	4646 - 400	R700400	R40H595	R40H9220	R40H3538	R40H3539
	Ra	WG	15 " x 5 "	1252 - 346	R700346	R40H597	R40H9200	R40H3540	R40H3541
R185	Ra	WG	15 " x 6 "	4596 - 381	R700381	R40H597	R40H9200	R40H3540	R40H3541
	Ra	WG	15 " x 7 "	4597 - 383	R700383	R40H597	R40H9200	R40H3540	R40H3541
Split System					R700321	R40H521	R40H9237	R40H3502	R40H3503
					R700321	R40H521	R40H9237	R40H3502	R40H3503
Split System									
F090, F120	Fa	WG	15 " x 3 "	1245C - 321	R700321	R40H521	R40H9237	R40H3502	R40H3503
	Fa	WG	15 " x 3 "	1245C - 321	R700321	R40H521	R40H9237	R40H3502	R40H3503
1985									
	Fd	DN		7149 - D236	MD236[341]	69310693	R40H5523	NR	NR
	Fd	DN		7149 - D236	MD236[341]	69310693	R40H5523	NR	NR
	Fd	DN		7149 - D236	MD236[341]	69310693	R40H5523	NR	NR
	Fd	DN		7141 - D224	MD224[340]	69310693	60050153	NR	NR
	Ra	LG	15 " x 5 "	4528A - 542	N/A	R40H618	NR	NR	NR
	Ra	LG	15 " x 5 "	4528A - 542	N/A	R40H618	NR	SP7888S	SP7888S
	Ra	LG	15 " x 6 "	4504A - 543	N/A	R40H618	NR	NR	NR
	Ra	LG	15 " x 6 "	4504A - 543	N/A	R40H618	NR	SP7888S	SP7888S
	Ra	LG	15 " x 6 "	4504A - 543	N/A	R40H618	NR	SP7887S	SP7887S
	Ra	LG	15 " x 6 "	4504A - 543	N/A	R40H618	NR	NR	NR
	Ra	LG	15 " x 7 "	4505A - 544	N/A	R40H618	NR	NR	NR
	Ra	LG	15 " x 7 "	4505A - 544	N/A	R40H618	NR	SP7887S	SP7887S
	Ra	LG	15 " x 7 "	4505A - 544	N/A	R40H618	NR	NR	NR
	Ra	LG	15 " x 7 "	4505A - 544	N/A	R40H618	NR	SP7888S	SP7888S
F050, F055, F060	Fa	KH	14 " x 2-1/2 "	2060 - 361	Discontinued	R40H596	R40H9219	R40H3536	R40H3537
F070	Fa	WG	15 " x 3 "	1245C - 321	R700321	R40H521	R40H9237	R40H3502	R40H3503
	Fa	WG	15 " x 3 "	1245C - 321	R700321	R40H521	R40H9237	R40H3502	R40H3503
	Fd	DN		7141 - D224	MD224[340]	69310693	60050153	NR	NR
F080, F090	Fd	DN		7149 - D236	MD236[341]	69310693	R40H5523	NR	NR
	Fd	DN		7149 - D236	MD236[341]	69310693	R40H5523	NR	NR
R170, R175	Ra	KH	15 " x 5 "	4646 - 400	R700400	R40H595	R40H9220	R40H3538	R40H3539
	Ra	WG	15 " x 5 "	1252 - 346	R700346	R40H597	R40H9200	R40H3540	R40H3541
R185	Ra	WG	15 " x 6 "	4596 - 381	R700381	R40H597	R40H9200	R40H3540	R40H3541
	Ra	WG	15 " x 7 "	4597 - 383	R700383	R40H597	R40H9200	R40H3540	R40H3541
Split System					R700321	R40H521	R40H9237	R40H3502	R40H3503
					R700321	R40H521	R40H9237	R40H3502	R40H3503
Split System									
F090, F120	Fa	WG	15 " x 3 "	1245C - 321	R700321	R40H521	R40H9237	R40H3502	R40H3503
	Fa	WG	15 " x 3 "	1245C - 321	R700321	R40H521	R40H9237	R40H3502	R40H3503
1984									
	Fd	DN		7149 - D236	MD236[341]	69310693	R40H5523	NR	NR
	Fd	DN		7141 - D224	MD224[340]	69310693	60050153	NR	NR
	Fd	DN		7149 - D236	MD236[341]	69310693	R40H5523	NR	NR
	Fd	DN		7149 - D236	MD236[341]	69310693	R40H5523	NR	NR
	Ra	LG	15 " x 5 "	4528A - 542	N/A	R40H618	NR	SP7888S	SP7888S
	Ra	LG	15 " x 5 "	4528A - 542	N/A	R40H618	NR	NR	NR
	Ra	LG	15 " x 6 "	4504A - 543	N/A	R40H618	NR	SP7887S	SP7887S
	Ra	LG	15 " x 6 "	4504A - 543	N/A	R40H618	NR	NR	NR
	Ra	LG	15 " x 6 "	4504A - 543	N/A	R40H618	NR	NR	NR
	Ra	LG	15 " x 6 "	4504A - 543	N/A	R40H618	NR	SP7888S	SP7888S
	Ra	LG	15 " x 7 "	4505A - 544	N/A	R40H618	NR	SP7887S	SP7887S
	Ra	LG	15 " x 7 "	4505A - 544	N/A	R40H618	NR	NR	NR
	Ra	LG	15 " x 7 "	4505A - 544	N/A	R40H618	NR	SP7888S	SP7888S
	Ra	LG	15 " x 7 "	4505A - 544	N/A	R40H618	NR	NR	NR
F050, F055, F060	Fa	KH	14 " x 2-1/2 "	2060 - 361	Discontinued	R40H596	R40H9219	R40H3536	R40H3537
F070	Fa	WG	15 " x 3 "	1245C - 321	R700321	R40H521	R40H9237	R40H3502	R40H3503
	Fa	WG	15 " x 3 "	1245C - 321	R700321	R40H521	R40H9237	R40H3502	R40H3503
	Fd	DN		7141 - D224	MD224[340]	69310693	60050153	NR	NR
F080, F090	Fd	DN		7149 - D236	MD236[341]	69310693	R40H5523	NR	NR

9 - 6 Stud, Dayton Rotor, Hat Style
53 - Power Brakes
188 - 6 Stud, 9.251" Hub

37 - Also available as a New unit
186 - 10 Stud
204 - Right Hand; use E-4057 for Left Hand Expander Kits

41 - Aluminum piston
187 - 6 Stud, 6.443" Hub
329 - Forward

MERITOR DRUM OR ROTOR NO.	CALIPER OR CYLINDER BORE SIZE	MERITOR CALIPER OR WHEEL CYLINDER (LEFT)	MERITOR CALIPER OR WHEEL CYLINDER (RIGHT)	MERITOR CALIPER OR WHEEL CYLINDER REPAIR KIT	MERITOR CALIPER PISTON	MERITOR MASTER CYLINDER	MERITOR MASTER CYLINDER KIT	MERITOR BRAKE HOSE (LEFT)	MERITOR BRAKE HOSE (RIGHT)
									FORD(Cont.)
LN600 SERIES: LOUISVILLE 94.4 BBC SHORT CONVENTIONAL CHASSIS CAB(Cont.)									
N/A	1-1/8 "	R4133714	R4133715	R4166926	NR	-	-	-	-
23-122700-002[9]	2-1/2 "	R424244X	R424244X[37]	60050266	69270757[41]	R4111999[53]	R4122386	R4577461	R4577461
23-122691-002[188]	2-7/8 "	60050145X	60050145X[37]	60050146	69270702[41]	R4111999[53]	R4122386	R4577461	R4577461
23-122703-002[186]	2-7/8 "	60050145X	60050145X[37]	60050146	69270702[41]	R4111999[53]	R4122386	R4577461	R4577461
N/A	1-1/2 "	R4033607	R4033607	R4166818	NR	-	-	-	-
N/A	1-5/8 "	R4133338	R4133338	R4166689	NR	-	-	-	-
N/A	1-5/8 "	R4133338	R4133338	R4166689	NR	-	-	-	-
N/A	1-3/4 "	R4133400	R4133400	R4166917	NR	-	-	-	-
N/A		R4133719	R4133718	R4166926	NR	N/A[358]	R4122688	-	-
N/A		R4133714	R4133715	R4166926	NR	N/A[358]	R4122688	-	-
N/A	1-1/4 "	R4133720	R4133721	R4166923	NR	-	-	-	-
N/A	1-1/4 "	R4133581	R4133581	R4166923	NR	-	-	-	-
23-122691-002[188]	2-7/8 "	60050145X	60050145X[37]	60050146	69270702[41]	R4111999[53]	R4122386	R4577461	R4577461
23-122703-002[186]	2-7/8 "	60050145X	60050145X[37]	60050146	69270702[41]	R4111999[53]	R4122386	R4577461	R4577461
23-122743-002[187]	2-7/8 "	60050145X	60050145X[37]	60050146	69270702[41]	R4111999[53]	R4122386	R4577461	R4577461
23-122700-002[9]	2-1/2 "	R424244X	R424244X[37]	60050266	69270757[41]	R4111999[53]	R4122386	R4577461	R4577461
N/A	1-5/8 "	201181	201182	SP7895S	NR	-	-	N/A	N/A
N/A	1-5/8 "	201185	201186[329]	SP7895S	NR	-	-	N/A	N/A
N/A	1-5/8 "	201181	201182	SP7895S	NR	-	-	N/A	N/A
N/A	1-5/8 "	201185	201186[329]	SP7895S	NR	-	-	N/A	N/A
N/A	1-3/4 "	201183X	201184X[329]	SP7873S	NR	-	-	N/A	N/A
N/A	1-3/4 "	201179X	201180X	SP7873S	SP7880S[204]	-	-	N/A	N/A
N/A	1-5/8 "	201181	201182	SP7895S	NR	-	-	N/A	N/A
N/A	1-3/4 "	201183X	201184X[329]	SP7873S	NR	-	-	N/A	N/A
N/A	1-3/4 "	201179X	201180X	SP7873S	SP7880S[204]	-	-	N/A	N/A
N/A	1-5/8 "	201185	201186[329]	SP7895S	NR	-	-	N/A	N/A
N/A	1.09375	R4133484	R4133485	R4166819	NR	-	-	-	-
N/A	1-1/8 "	R4133716	R4133717	R4166926	NR	-	-	-	-
N/A	1-1/8 "	R4133714	R4133715	R4166926	NR	-	-	-	-
23-122700-002[9]	2-1/2 "	R424244X	R424244X[37]	60050266	69270757[41]	R4111999[53]	R4122386	R4577461	R4577461
23-122691-002[188]	2-7/8 "	60050145X	60050145X[37]	60050146	69270702[41]	R4111999[53]	R4122386	R4577461	R4577461
23-122703-002[186]	2-7/8 "	60050145X	60050145X[37]	60050146	69270702[41]	R4111999[53]	R4122386	R4577461	R4577461
N/A	1-1/2 "	R4033607	R4033607	R4166818	NR	-	-	-	-
N/A	1-5/8 "	R4133338	R4133338	R4166689	NR	-	-	-	-
N/A	1-5/8 "	R4133338	R4133338	R4166689	NR	-	-	-	-
N/A	1-3/4 "	R4133400	R4133400	R4166917	NR	-	-	-	-
N/A		R4133719	R4133718	R4166926	NR	N/A[358]	R4122688	-	-
N/A		R4133714	R4133715	R4166926	NR	N/A[358]	R4122688	-	-
N/A	1-1/4 "	R4133720	R4133721	R4166923	NR	-	-	-	-
N/A	1-1/4 "	R4133581	R4133581	R4166923	NR	-	-	-	-
23-122691-002[188]	2-7/8 "	60050145X	60050145X[37]	60050146	69270702[41]	R4111999[53]	R4122386	R4577461	R4577461
23-122700-002[9]	2-1/2 "	R424244X	R424244X[37]	60050266	69270757[41]	R4111999[53]	R4122386	R4577461	R4577461
23-122703-002[186]	2-7/8 "	60050145X	60050145X[37]	60050146	69270702[41]	R4111999[53]	R4122386	R4577461	R4577461
23-122743-002[187]	2-7/8 "	60050145X	60050145X[37]	60050146	69270702[41]	R4111999[53]	R4122386	R4577461	R4577461
N/A	1-5/8 "	201185	201186[329]	SP7895S	NR	-	-	N/A	N/A
N/A	1-5/8 "	201181	201182	SP7895S	NR	-	-	N/A	N/A
N/A	1-3/4 "	201183X	201184X[329]	SP7873S	NR	-	-	N/A	N/A
N/A	1-3/4 "	201179X	201180X	SP7873S	SP7880S[204]	-	-	N/A	N/A
N/A	1-5/8 "	201181	201182	SP7895S	NR	-	-	N/A	N/A
N/A	1-5/8 "	201185	201186[329]	SP7895S	NR	-	-	N/A	N/A
N/A	1-3/4 "	201183X	201184X[329]	SP7873S	NR	-	-	N/A	N/A
N/A	1-3/4 "	201179X	201180X	SP7873S	SP7880S[204]	-	-	N/A	N/A
N/A	1-5/8 "	201185	201186[329]	SP7895S	NR	-	-	N/A	N/A
N/A	1-5/8 "	201181	201182	SP7895S	NR	-	-	N/A	N/A
N/A	1.09375	R4133484	R4133485	R4166819	NR	-	-	-	-
N/A	1-1/8 "	R4133714	R4133715	R4166926	NR	-	-	-	-
N/A	1-1/8 "	R4133716	R4133717	R4166926	NR	-	-	-	-
23-122700-002[9]	2-1/2 "	R424244X	R424244X[37]	60050266	69270757[41]	R4111999[53]	R4122386	R4577461	R4577461
23-122691-002[188]	2-7/8 "	60050145X	60050145X[37]	60050146	69270702[41]	R4111999[53]	R4122386	R4577461	R4577461

340 - Use 69160457 for Disc Pad Retainer Clip

341 - Use 69160445 for Disc Pad Retainer Clip

358 - Split System

MAKE MODEL YEAR AXLE CODE AXLE WEIGHT	AXLE & BRK. TYPE	BRK. MFG.	BRAKE SIZE	FMSI	MERITOR DISC PAD OR BRAKE SHOE	MERITOR GUIDE PIN OR RETURN SPRING KIT	MERITOR CALIPER HWD. KIT OR RETURN SPRING KIT	MERITOR ADJUSTER KIT (LEFT WHEEL)	MERITOR ADJUSTER KIT (RIGHT WHEEL)
FORD(Cont.)									
LN600 SERIES: LOUISVILLE 94.4 BBC SHORT CONVENTIONAL CHASSIS CAB(Cont.)									
1984									
	Fd	DN		7149 - D236	MD236[341]	69310693	R40H5523	NR	NR
R170, R175	Ra	KH	15 " x 5 "	4646 - 400	R700400	R40H595	R40H9220	R40H3538	R40H3539
	Ra	WG	15 " x 5 "	1252 - 346	R700346	R40H597	R40H9200	R40H3540	R40H3541
R185	Ra	WG	15 " x 6 "	4596 - 381	R700381	R40H597	R40H9200	R40H3540	R40H3541
	Ra	WG	15 " x 7 "	4597 - 383	R700383	R40H597	R40H9200	R40H3540	R40H3541
Split System					R700321	R40H521	R40H9237	R40H3502	R40H3503
					R700321	R40H521	R40H9237	R40H3502	R40H3503
Split System F090, F120	Fa	WG	15 " x 3 "	1245C - 321	R700321	R40H521	R40H9237	R40H3502	R40H3503
	Fa	WG	15 " x 3 "	1245C - 321	R700321	R40H521	R40H9237	R40H3502	R40H3503
1983									
	Ra	LG	15 " x 6 "	4504A - 543	N/A	R40H618	NR	SP7888S	SP7888S
	Ra	LG	15 " x 6 "	4504A - 543	N/A	R40H618	NR	NR	NR
	Ra	LG	15 " x 7 "	4505A - 544	N/A	R40H618	NR	SP7888S	SP7888S
	Ra	LG	15 " x 7 "	4505A - 544	N/A	R40H618	NR	NR	NR
F050, F055, F060	Fa	KH	14 " x 2-1/2 "	2060 - 361	Discontinued	R40H596	R40H9219	R40H3536	R40H3537
F070	Fa	WG	15 " x 3 "	1245C - 321	R700321	R40H521	R40H9237	R40H3502	R40H3503
	Fa	WG	15 " x 3 "	1245C - 321	R700321	R40H521	R40H9237	R40H3502	R40H3503
	Fa	WG	15 " x 3 "	1245C - 321	R700321	R40H521	R40H9237	R40H3502	R40H3503
	Fa	WG	15 " x 3 "	1245C - 321	R700321	R40H521	R40H9237	R40H3502	R40H3503
	Fd	DN		7141 - D224	MD224[340]	69310693	60050153	NR	NR
F080, F090	Fd	DN		7149 - D236	MD236[341]	69310693	R40H5523	NR	NR
	Fd	DN		7149 - D236	MD236[341]	69310693	R40H5523	NR	NR
F090, F120	Fa	WG	15 " x 3 "	1245C - 321	R700321	R40H521	R40H9237	R40H3502	R40H3503
	Fa	WG	15 " x 3 "	1245C - 321	R700321	R40H521	R40H9237	R40H3502	R40H3503
R170, R175	Ra	KH	15 " x 5 "	4646 - 400	R700400	R40H595	R40H9220	R40H3538	R40H3539
	Ra	WG	15 " x 5 "	1252 - 346	R700346	R40H597	R40H9200	R40H3540	R40H3541
R185	Ra	WG	15 " x 6 "	4596 - 381	R700381	R40H597	R40H9200	R40H3540	R40H3541
	Ra	WG	15 " x 7 "	4597 - 383	R700383	R40H597	R40H9200	R40H3540	R40H3541
1982									
	Ra	LG	15 " x 6 "	4504A - 543	N/A	R40H618	NR	NR	NR
	Ra	LG	15 " x 6 "	4504A - 543	N/A	R40H618	NR	SP7888S	SP7888S
	Ra	LG	15 " x 7 "	4505A - 544	N/A	R40H618	NR	SP7888S	SP7888S
	Ra	LG	15 " x 7 "	4505A - 544	N/A	R40H618	NR	NR	NR
F050, F055, F060	Fa	KH	14 " x 2-1/2 "	2060 - 361	Discontinued	R40H596	R40H9219	R40H3536	R40H3537
F070	Fa	WG	15 " x 3 "	1245C - 321	R700321	R40H521	R40H9237	R40H3502	R40H3503
	Fa	WG	15 " x 3 "	1245C - 321	R700321	R40H521	R40H9237	R40H3502	R40H3503
	Fa	WG	15 " x 3 "	1245C - 321	R700321	R40H521	R40H9237	R40H3502	R40H3503
	Fa	WG	15 " x 3 "	1245C - 321	R700321	R40H521	R40H9237	R40H3502	R40H3503
	Fd	DN		7141 - D224	MD224[340]	69310693	60050153	NR	NR
F080, F090	Fd	DN		7149 - D236	MD236[341]	69310693	R40H5523	NR	NR
	Fd	DN		7149 - D236	MD236[341]	69310693	R40H5523	NR	NR
F090, F120	Fa	WG	15 " x 3 "	1245C - 321	R700321	R40H521	R40H9237	R40H3502	R40H3503
	Fa	WG	15 " x 3 "	1245C - 321	R700321	R40H521	R40H9237	R40H3502	R40H3503
R170, R175	Ra	KH	15 " x 5 "	4646 - 400	R700400	R40H595	R40H9220	R40H3538	R40H3539
	Ra	WG	15 " x 5 "	1252 - 346	R700346	R40H597	R40H9200	R40H3540	R40H3541
R185	Ra	WG	15 " x 6 "	4596 - 381	R700381	R40H597	R40H9200	R40H3540	R40H3541
	Ra	WG	15 " x 7 "	4597 - 383	R700383	R40H597	R40H9200	R40H3540	R40H3541
1981									
	Ra	LG	15 " x 6 "	4504A - 543	N/A	R40H618	NR	SP7888S	SP7888S
	Ra	LG	15 " x 6 "	4504A - 543	N/A	R40H618	NR	NR	NR
	Ra	LG	15 " x 7 "	4505A - 544	N/A	R40H618	NR	SP7888S	SP7888S
	Ra	LG	15 " x 7 "	4505A - 544	N/A	R40H618	NR	NR	NR
F050, F055, F060	Fa	KH	14 " x 2-1/2 "	2060 - 361	Discontinued	R40H596	R40H9219	R40H3536	R40H3537
F070	Fa	WG	15 " x 3 "	1245C - 321	R700321	R40H521	R40H9237	R40H3502	R40H3503
	Fa	WG	15 " x 3 "	1245C - 321	R700321	R40H521	R40H9237	R40H3502	R40H3503
	Fa	WG	15 " x 3 "	1245C - 321	R700321	R40H521	R40H9237	R40H3502	R40H3503
	Fa	WG	15 " x 3 "	1245C - 321	R700321	R40H521	R40H9237	R40H3502	R40H3503
	Fd	DN		7141 - D224	MD224[340]	69310693	60050153	NR	NR
F080, F090	Fd	DN		7149 - D236	MD236[341]	69310693	R40H5523	NR	NR
	Fd	DN		7149 - D236	MD236[341]	69310693	R40H5523	NR	NR
F090, F120	Fa	WG	15 " x 3 "	1245C - 321	R700321	R40H521	R40H9237	R40H3502	R40H3503
	Fa	WG	15 " x 3 "	1245C - 321	R700321	R40H521	R40H9237	R40H3502	R40H3503

9 - 6 Stud, Dayton Rotor, Hat Style
53 - Power Brakes
214 - Power Brakes, Split System
37 - Also available as a New unit
186 - 10 Stud
219 - Power Brakes, Gasoline Engine with Vacuum Booster
41 - Aluminum piston
188 - 6 Stud, 9.251" Hub
329 - Forward

MERITOR DRUM OR ROTOR NO.	CALIPER OR CYLINDER BORE SIZE	MERITOR CALIPER OR WHEEL CYLINDER (LEFT)	MERITOR CALIPER OR WHEEL CYLINDER (RIGHT)	MERITOR CALIPER OR WHEEL CYLINDER REPAIR KIT	MERITOR CALIPER PISTON	MERITOR MASTER CYLINDER	MERITOR MASTER CYLINDER KIT	MERITOR BRAKE HOSE (LEFT)	MERITOR BRAKE HOSE (RIGHT)
									FORD(Cont.)
LN600 SERIES: LOUISVILLE 94.4 BBC SHORT CONVENTIONAL CHASSIS CAB(Cont.)									
23-122703-002[186]	2-7/8 "	60050145X	60050145X[37]	60050146	69270702[41]	R4111999[53]	R4122386	R4577461	R4577461
N/A	1-1/2 "	R4033607	R4033607	R4166818	NR	-	-	-	-
N/A	1-5/8 "	R4133338	R4133338	R4166689	NR	-	-	-	-
N/A	1-5/8 "	R4133338	R4133338	R4166689	NR	-	-	-	-
N/A	1-3/4 "	R4133400	R4133400	R4166917	NR	-	-	-	-
N/A		R4133719	R4133718	R4166926	NR	N/A[358]	R4122688	-	-
N/A		R4133714	R4133715	R4166926	NR	N/A[358]	R4122688	-	-
N/A	1-1/4 "	R4133581	R4133581	R4166923	NR	-	-	-	-
N/A	1-1/4 "	R4133720	R4133721	R4166923	NR	-	-	-	-
N/A	1-5/8 "	201185	201186[329]	SP7895S	NR	-	-	R4577147	R4577147
N/A	1-5/8 "	201181	201182	SP7895S	NR	-	-	R4577147	R4577147
N/A	1-5/8 "	201185	201186[329]	SP7895S	NR	-	-	R4577147	R4577147
N/A	1-5/8 "	201181	201182	SP7895S	NR	-	-	R4577147	R4577147
N/A	1.09375	R4133484	R4133485	R4166819	NR	R4111629[53]	R4122484	R4577460	R4577460
N/A	1-1/8 "	R4133714	R4133715	R4166926	NR	R4111911[219]	R4122387	R4577454	R4577455
N/A	1-1/8 "	R4133714	R4133715	R4166926	NR	R4111992[214]	R4122386	R4577452	R4577453
N/A	1-1/8 "	R4133719	R4133718	R4166926	NR	R4111992[214]	R4122386	R4577452	R4577453
N/A	1-1/8 "	R4133716	R4133717	R4166926	NR	R4111911[219]	R4122387	R4577454	R4577455
23-122700-002[9]	2-1/2 "	R424244X	R424244X[37]	60050266	69270757[41]	R4111992[214]	R4122386	R4577452	R4577453
23-122691-002[188]	2-7/8 "	60050145X	60050145X[37]	60050146	69270702[41]	R4111992[214]	R4122386	R4577452	R4577453
23-122703-002[186]	2-7/8 "	60050145X	60050145X[37]	60050146	69270702[41]	R4111992[214]	R4122386	R4577452	R4577453
N/A	1-1/4 "	R4133720	R4133721	R4166923	NR	R4111992[214]	R4122386	R4577452	R4577453
N/A	1-1/4 "	R4133581	R4133581	R4166923	NR	R4111992[214]	R4122386	R4577452	R4577453
N/A	1-1/2 "	R4033607	R4033607	R4166818	NR	-	-	R4577147	R4577147
N/A	1-5/8 "	R4133338	R4133338	R4166689	NR	-	-	R4577147	R4577147
N/A	1-5/8 "	R4133338	R4133338	R4166689	NR	-	-	R4577147	R4577147
N/A	1-3/4 "	R4133400	R4133400	R4166917	NR	-	-	R4577147	R4577147
N/A	1-5/8 "	201181	201182	SP7895S	NR	-	-	R4577147	R4577147
N/A	1-5/8 "	201185	201186[329]	SP7895S	NR	-	-	R4577147	R4577147
N/A	1-5/8 "	201185	201186[329]	SP7895S	NR	-	-	R4577147	R4577147
N/A	1-5/8 "	201181	201182	SP7895S	NR	-	-	R4577147	R4577147
N/A	1.09375	R4133484	R4133485	R4166819	NR	R4111629[53]	R4122484	R4577460	R4577460
N/A	1-1/8 "	R4133719	R4133718	R4166926	NR	R4111992[214]	R4122386	R4577452	R4577453
N/A	1-1/8 "	R4133714	R4133715	R4166926	NR	R4111992[214]	R4122386	R4577452	R4577453
N/A	1-1/8 "	R4133716	R4133717	R4166926	NR	R4111911[219]	R4122387	R4577454	R4577455
N/A	1-1/8 "	R4133714	R4133715	R4166926	NR	R4111911[219]	R4122387	R4577454	R4577455
23-122700-002[9]	2-1/2 "	R424244X	R424244X[37]	60050266	69270757[41]	R4111992[214]	R4122386	R4577452	R4577453
23-122703-002[186]	2-7/8 "	60050145X	60050145X[37]	60050146	69270702[41]	R4111992[214]	R4122386	R4577452	R4577453
23-122691-002[188]	2-7/8 "	60050145X	60050145X[37]	60050146	69270702[41]	R4111992[214]	R4122386	R4577452	R4577453
N/A	1-1/4 "	R4133720	R4133721	R4166923	NR	R4111992[214]	R4122386	R4577452	R4577453
N/A	1-1/4 "	R4133581	R4133581	R4166923	NR	R4111992[214]	R4122386	R4577452	R4577453
N/A	1-1/2 "	R4033607	R4033607	R4166818	NR	-	-	R4577147	R4577147
N/A	1-5/8 "	R4133338	R4133338	R4166689	NR	-	-	R4577147	R4577147
N/A	1-5/8 "	R4133338	R4133338	R4166689	NR	-	-	R4577147	R4577147
N/A	1-3/4 "	R4133400	R4133400	R4166917	NR	-	-	R4577147	R4577147
N/A	1-5/8 "	201185	201186[329]	SP7895S	NR	-	-	R4577147	R4577147
N/A	1-5/8 "	201181	201182	SP7895S	NR	-	-	R4577147	R4577147
N/A	1-5/8 "	201185	201186[329]	SP7895S	NR	-	-	R4577147	R4577147
N/A	1-5/8 "	201181	201182	SP7895S	NR	-	-	R4577147	R4577147
N/A	1.09375	R4133484	R4133485	R4166819	NR	R4111629[53]	R4122484	R4577460	R4577460
N/A	1-1/8 "	R4133714	R4133715	R4166926	NR	R4111992[214]	R4122386	R4577452	R4577453
N/A	1-1/8 "	R4133719	R4133718	R4166926	NR	R4111992[214]	R4122386	R4577452	R4577453
N/A	1-1/8 "	R4133716	R4133717	R4166926	NR	R4111911[219]	R4122387	R4577454	R4577455
N/A	1-1/8 "	R4133714	R4133715	R4166926	NR	R4111911[219]	R4122387	R4577454	R4577455
23-122700-002[9]	2-1/2 "	R424244X	R424244X[37]	60050266	69270757[41]	R4111992[214]	R4122386	R4577452	R4577453
23-122703-002[186]	2-7/8 "	60050145X	60050145X[37]	60050146	69270702[41]	R4111992[214]	R4122386	R4577452	R4577453
23-122691-002[188]	2-7/8 "	60050145X	60050145X[37]	60050146	69270702[41]	R4111992[214]	R4122386	R4577452	R4577453
N/A	1-1/4 "	R4133720	R4133721	R4166923	NR	R4111992[214]	R4122386	R4577452	R4577453
N/A	1-1/4 "	R4133581	R4133581	R4166923	NR	R4111992[214]	R4122386	R4577452	R4577453

340 - Use 69160457 for Disc Pad Retainer Clip

341 - Use 69160445 for Disc Pad Retainer Clip

358 - Split System

MAKE MODEL YEAR AXLE CODE AXLE WEIGHT	AXLE & BRK. TYPE	BRK. MFG.	BRAKE SIZE	FMSI	MERITOR DISC PAD OR BRAKE SHOE	MERITOR GUIDE PIN OR RETURN SPRING KIT	MERITOR CALIPER HWD. KIT OR RETURN SPRING KIT	MERITOR ADJUSTER KIT (LEFT WHEEL)	MERITOR ADJUSTER KIT (RIGHT WHEEL)
FORD(Cont.)									
LN600 SERIES: LOUISVILLE 94.4 BBC SHORT CONVENTIONAL CHASSIS CAB(Cont.)									
1981									
R170, R175	Ra	KH	15 " x 5 "	4646 - 400	R700400	R40H595	R40H9220	R40H3538	R40H3539
	Ra	WG	15 " x 5 "	1252 - 346	R700346	R40H597	R40H9200	R40H3540	R40H3541
R185	Ra	WG	15 " x 6 "	4596 - 381	R700381	R40H597	R40H9200	R40H3540	R40H3541
	Ra	WG	15 " x 7 "	4597 - 383	R700383	R40H597	R40H9200	R40H3540	R40H3541
1980									
	Ra	LG	15 " x 6 "	4504A - 543	N/A	R40H618	NR	NR	NR
	Ra	LG	15 " x 6 "	4504A - 543	N/A	R40H618	NR	SP7888S	SP7888S
	Ra	LG	15 " x 7 "	4505A - 544	N/A	R40H618	NR	NR	NR
	Ra	LG	15 " x 7 "	4505A - 544	N/A	R40H618	NR	SP7888S	SP7888S
F050, F055, F060	Fa	KH	14 " x 2-1/2 "	2060 - 361	Discontinued	R40H596	R40H9219	R40H3536	R40H3537
F070	Fa	WG	15 " x 3 "	1245C - 321	R700321	R40H521	R40H9237	R40H3502	R40H3503
	Fa	WG	15 " x 3 "	1245C - 321	R700321	R40H521	R40H9237	R40H3502	R40H3503
	Fa	WG	15 " x 3 "	1245C - 321	R700321	R40H521	R40H9237	R40H3502	R40H3503
	Fa	WG	15 " x 3 "	1245C - 321	R700321	R40H521	R40H9237	R40H3502	R40H3503
	Fd	DN		7141 - D224	MD224[340]	69310693	60050153	NR	NR
F080, F090	Fd	DN		7149 - D236	MD236[341]	69310693	R40H5523	NR	NR
	Fd	DN		7149 - D236	MD236[341]	69310693	R40H5523	NR	NR
F090, F120	Fa	WG	15 " x 3 "	1245C - 321	R700321	R40H521	R40H9237	R40H3502	R40H3503
	Fa	WG	15 " x 3 "	1245C - 321	R700321	R40H521	R40H9237	R40H3502	R40H3503
R170, R175	Ra	KH	15 " x 5 "	4646 - 400	R700400	R40H595	R40H9220	R40H3538	R40H3539
	Ra	WG	15 " x 5 "	1252 - 346	R700346	R40H597	R40H9200	R40H3540	R40H3541
R185	Ra	WG	15 " x 6 "	4596 - 381	R700381	R40H597	R40H9200	R40H3540	R40H3541
	Ra	WG	15 " x 7 "	4597 - 383	R700383	R40H597	R40H9200	R40H3540	R40H3541
1979									
F050, F055, F060	Fa	KH	14 " x 2-1/2 "	2060 - 361	Discontinued	R40H596	R40H9219	R40H3536	R40H3537
F070	Fa	WG	15 " x 3 "	1245C - 321	R700321	R40H521	R40H9237	R40H3502	R40H3503
	Fa	WG	15 " x 3 "	1245C - 321	R700321	R40H521	R40H9237	R40H3502	R40H3503
	Fd	DN		7141 - D224	MD224[340]	69310693	60050153	NR	NR
F080, F090	Fd	DN		7149 - D236	MD236[341]	69310693	R40H5523	NR	NR
	Fd	DN		7149 - D236	MD236[341]	69310693	R40H5523	NR	NR
R170, R175	Ra	KH	15 " x 5 "	4646 - 400	R700400	R40H595	R40H9220	R40H3538	R40H3539
	Ra	WG	15 " x 5 "	1252 - 346	R700346	R40H597	R40H9200	R40H3540	R40H3541
R185	Ra	WG	15 " x 6 "	4596 - 381	R700381	R40H597	R40H9200	R40H3540	R40H3541
	Ra	WG	15 " x 7 "	4597 - 383	R700383	R40H597	R40H9200	R40H3540	R40H3541
Split System					R700321	R40H521	R40H9237	R40H3502	R40H3503
					R700321	R40H521	R40H9237	R40H3502	R40H3503
Split System									
F090, F120	Fa	WG	15 " x 3 "	1245C - 321	R700321	R40H521	R40H9237	R40H3502	R40H3503
	Fa	WG	15 " x 3 "	1245C - 321	R700321	R40H521	R40H9237	R40H3502	R40H3503
1978									
F050, F055, F060	Fa	KH	14 " x 2-1/2 "	2060 - 361	Discontinued	R40H596	R40H9219	R40H3536	R40H3537
F070	Fa	WG	15 " x 3 "	1245C - 321	R700321	R40H521	R40H9237	R40H3502	R40H3503
	Fa	WG	15 " x 3 "	1245C - 321	R700321	R40H521	R40H9237	R40H3502	R40H3503
	Fd	DN		7141 - D224	MD224[340]	69310693	60050153	NR	NR
F080, F090	Fd	DN		7149 - D236	MD236[341]	69310693	R40H5523	NR	NR
	Fd	DN		7149 - D236	MD236[341]	69310693	R40H5523	NR	NR
R170, R175	Ra	KH	15 " x 5 "	4646 - 400	R700400	R40H595	R40H9220	R40H3538	R40H3539
	Ra	WG	15 " x 5 "	1252 - 346	R700346	R40H597	R40H9200	R40H3540	R40H3541
R185	Ra	WG	15 " x 6 "	4596 - 381	R700381	R40H597	R40H9200	R40H3540	R40H3541
	Ra	WG	15 " x 7 "	4597 - 383	R700383	R40H597	R40H9200	R40H3540	R40H3541
Split System					R700321	R40H521	R40H9237	R40H3502	R40H3503
					R700321	R40H521	R40H9237	R40H3502	R40H3503
Split System									
F090, F120	Fa	WG	15 " x 3 "	1245C - 321	R700321	R40H521	R40H9237	R40H3502	R40H3503
	Fa	WG	15 " x 3 "	1245C - 321	R700321	R40H521	R40H9237	R40H3502	R40H3503
1977									
F050, F055, F060	Fa	KH	14 " x 2-1/2 "	2060 - 361	Discontinued	R40H596	R40H9219	R40H3536	R40H3537
	Fa	KH	14 " x 2-1/2 "	2060 - 361	Discontinued	R40H596	R40H9219	R40H3536	R40H3537
F070	Fa	WG	15 " x 3 "	1245C - 321	R700321	R40H521	R40H9237	R40H3502	R40H3503
	Fa	WG	15 " x 3 "	1245C - 321	R700321	R40H521	R40H9237	R40H3502	R40H3503
	Fa	WG	15 " x 3 "	1245C - 321	R700321	R40H521	R40H9237	R40H3502	R40H3503
	Fa	WG	15 " x 3 "	1245C - 321	R700321	R40H521	R40H9237	R40H3502	R40H3503
	Fa	WG	15 " x 3 "	1245C - 321	R700321	R40H521	R40H9237	R40H3502	R40H3503

9 - 6 Stud, Dayton Rotor, Hat Style
53 - Power Brakes
214 - Power Brakes, Split System
37 - Also available as a New unit
186 - 10 Stud
219 - Power Brakes, Gasoline Engine with Vacuum Booster
41 - Aluminum piston
188 - 6 Stud, 9.251" Hub
329 - Forward

MERITOR DRUM OR ROTOR NO.	CALIPER OR CYLINDER BORE SIZE	MERITOR CALIPER OR WHEEL CYLINDER (LEFT)	MERITOR CALIPER OR WHEEL CYLINDER (RIGHT)	MERITOR CALIPER OR WHEEL CYLINDER REPAIR KIT	MERITOR CALIPER PISTON	MERITOR MASTER CYLINDER	MERITOR MASTER CYLINDER KIT	MERITOR BRAKE HOSE (LEFT)	MERITOR BRAKE HOSE (RIGHT)
									FORD(Cont.)
LN600 SERIES: LOUISVILLE 94.4 BBC SHORT CONVENTIONAL CHASSIS CAB(Cont.)									
N/A	1-1/2 "	R4033607	R4033607	R4166818	NR	-	-	R4577147	R4577147
N/A	1-5/8 "	R4133338	R4133338	R4166689	NR	-	-	R4577147	R4577147
N/A	1-5/8 "	R4133338	R4133338	R4166689	NR	-	-	R4577147	R4577147
N/A	1-3/4 "	R4133400	R4133400	R4166917	NR	-	-	R4577147	R4577147
N/A	1-5/8 "	201181	201182	SP7895S	NR	-	-	R4577147	R4577147
N/A	1-5/8 "	201185	201186[329]	SP7895S	NR	-	-	R4577147	R4577147
N/A	1-5/8 "	201181	201182	SP7895S	NR	-	-	R4577147	R4577147
N/A	1-5/8 "	201185	201186[329]	SP7895S	NR	-	-	R4577147	R4577147
N/A	1.09375	R4133484	R4133485	R4166819	NR	R4111629[53]	R4122484	R4577460	R4577460
N/A	1-1/8 "	R4133714	R4133715	R4166926	NR	R4111911[219]	R4122387	R4577454	R4577455
N/A	1-1/8 "	R4133716	R4133717	R4166926	NR	R4111911[219]	R4122387	R4577454	R4577455
N/A	1-1/8 "	R4133719	R4133718	R4166926	NR	R4111992[214]	R4122386	R4577452	R4577453
N/A	1-1/8 "	R4133714	R4133715	R4166926	NR	R4111992[214]	R4122386	R4577452	R4577453
23-122700-002[9]	2-1/2 "	R424244X	R424244X[37]	60050266	69270757[41]	R4111992[214]	R4122386	R4577452	R4577453
23-122703-002[186]	2-7/8 "	60050145X	60050145X[37]	60050146	69270702[41]	R4111992[214]	R4122386	R4577452	R4577453
23-122691-002[188]	2-7/8 "	60050145X	60050145X[37]	60050146	69270702[41]	R4111992[214]	R4122386	R4577452	R4577453
N/A	1-1/4 "	R4133720	R4133721	R4166923	NR	R4111992[214]	R4122386	R4577452	R4577453
N/A	1-1/4 "	R4133581	R4133581	R4166923	NR	R4111992[214]	R4122386	R4577452	R4577453
N/A	1-1/2 "	R4033607	R4033607	R4166818	NR	-	-	R4577147	R4577147
N/A	1-5/8 "	R4133338	R4133338	R4166689	NR	-	-	R4577147	R4577147
N/A	1-5/8 "	R4133338	R4133338	R4166689	NR	-	-	R4577147	R4577147
N/A	1-3/4 "	R4133400	R4133400	R4166917	NR	-	-	R4577147	R4577147
N/A	1.09375	R4133484	R4133485	R4166819	NR	-	-	-	-
N/A	1-1/8 "	R4133716	R4133717	R4166926	NR	-	-	-	-
N/A	1-1/8 "	R4133714	R4133715	R4166926	NR	-	-	-	-
23-122700-002[9]	2-1/2 "	R424244X	R424244X[37]	60050266	69270757[41]	-	-	-	-
23-122703-002[186]	2-7/8 "	60050145X	60050145X[37]	60050146	69270702[41]	-	-	-	-
23-122691-002[188]	2-7/8 "	60050145X	60050145X[37]	60050146	69270702[41]	-	-	-	-
N/A	1-1/2 "	R4033607	R4033607	R4166818	NR	-	-	-	-
N/A	1-5/8 "	R4133338	R4133338	R4166689	NR	-	-	-	-
N/A	1-5/8 "	R4133338	R4133338	R4166689	NR	-	-	-	-
N/A	1-3/4 "	R4133400	R4133400	R4166917	NR	-	-	-	-
N/A		R4133719	R4133718	R4166926	NR	N/A[358]	R4122688	-	-
N/A		R4133714	R4133715	R4166926	NR	N/A[358]	R4122688	-	-
N/A	1-1/4 "	R4133720	R4133721	R4166923	NR	-	-	-	-
N/A	1-1/4 "	R4133581	R4133581	R4166923	NR	-	-	-	-
N/A	1.09375	R4133484	R4133485	R4166819	NR	-	-	-	-
N/A	1-1/8 "	R4133716	R4133717	R4166926	NR	-	-	-	-
N/A	1-1/8 "	R4133714	R4133715	R4166926	NR	-	-	-	-
23-122700-002[9]	2-1/2 "	R424244X	R424244X[37]	60050266	69270757[41]	-	-	-	-
23-122691-002[188]	2-7/8 "	60050145X	60050145X[37]	60050146	69270702[41]	-	-	-	-
23-122703-002[186]	2-7/8 "	60050145X	60050145X[37]	60050146	69270702[41]	-	-	-	-
N/A	1-1/2 "	R4033607	R4033607	R4166818	NR	-	-	-	-
N/A	1-5/8 "	R4133338	R4133338	R4166689	NR	-	-	-	-
N/A	1-5/8 "	R4133338	R4133338	R4166689	NR	-	-	-	-
N/A	1-3/4 "	R4133400	R4133400	R4166917	NR	-	-	-	-
N/A		R4133719	R4133718	R4166926	NR	N/A[358]	R4122688	-	-
N/A		R4133714	R4133715	R4166926	NR	N/A[358]	R4122688	-	-
N/A	1-1/4 "	R4133720	R4133721	R4166923	NR	-	-	-	-
N/A	1-1/4 "	R4133581	R4133581	R4166923	NR	-	-	-	-
-	1.09375	R4133484	R4133485	R4166819	NR	-	-	-	-
-	1.09375	R4133484	R4133485	R4166819	NR	-	-	-	-
-	1-1/8 "	R4133714	R4133715	R4166926	NR	-	-	-	-
-	1-1/8 "	R4133719	R4133718	R4166926	NR	N/A[358]	R4122688	-	-
-	1-1/8 "	R4133714	R4133715	R4166926	NR	N/A[358]	R4122688	-	-
-	1-1/8 "	R4133716	R4133717	R4166926	NR	-	-	-	-
-	1-1/8 "	R4133714	R4133715	R4166926	NR	N/A[358]	R4122688	-	-

340 - Use 69160457 for Disc Pad Retainer Clip

341 - Use 69160445 for Disc Pad Retainer Clip

358 - Split System

MAKE MODEL YEAR AXLE CODE AXLE WEIGHT	AXLE & BRK. TYPE	BRK. MFG.	BRAKE SIZE	FMSI	MERITOR DISC PAD OR BRAKE SHOE	MERITOR GUIDE PIN OR RETURN SPRING KIT	MERITOR CALIPER HWD. KIT OR RETURN SPRING KIT	MERITOR ADJUSTER KIT (LEFT WHEEL)	MERITOR ADJUSTER KIT (RIGHT WHEEL)
FORD(Cont.)									
LN600 SERIES: LOUISVILLE 94.4 BBC SHORT CONVENTIONAL CHASSIS CAB(Cont.)									
1977									
	Fa	WG	15 " x 3 "	1245C - 321	R700321	R40H521	R40H9237	R40H3502	R40H3503
	Fa	WG	15 " x 3 "	1245C - 321	R700321	R40H521	R40H9237	R40H3502	R40H3503
	Fa	WG	15 " x 3 "	1245C - 321	R700321	R40H521	R40H9237	R40H3502	R40H3503
	Fd	DN		7141 - D224	MD224[340]	69310693	60050153	NR	NR
F080, F090	Fd	DN		7149 - D236	MD236[341]	69310693	R40H5523	NR	NR
	Fd	DN		7149 - D236	MD236[341]	69310693	R40H5523	NR	NR
F090, F120	Fa	WG	15 " x 3 "	1245C - 321	R700321	R40H521	R40H9237	R40H3502	R40H3503
	Fa	WG	15 " x 3 "	1245C - 321	R700321	R40H521	R40H9237	R40H3502	R40H3503
	Fa	WG	15 " x 3 "	1245C - 321	R700321	R40H521	R40H9237	R40H3502	R40H3503
	Fa	WG	15 " x 3 "	1245C - 321	R700321	R40H521	R40H9237	R40H3502	R40H3503
R170, R175	Ra	KH	15 " x 5 "	4646 - 400	R700400	R40H595	R40H9220	R40H3538	R40H3539
	Ra	KH	15 " x 5 "	4646 - 400	R700400	R40H595	R40H9220	R40H3538	R40H3539
	Ra	KH	15 " x 5 "	4646 - 400	R700400	R40H595	R40H9220	R40H3538	R40H3539
	Ra	WG	15 " x 5 "	1252 - 346	R700346	R40H597	R40H9200	R40H3540	R40H3541
	Ra	WG	15 " x 5 "	1252 - 346	R700346	R40H597	R40H9200	R40H3540	R40H3541
R185	Ra	WG	15 " x 6 "	4596 - 381	R700381	R40H597	R40H9200	R40H3540	R40H3541
	Ra	WG	15 " x 6 "	4596 - 381	R700381	R40H597	R40H9200	R40H3540	R40H3541
	Ra	WG	15 " x 7 "	4597 - 383	R700383	R40H597	R40H9200	R40H3540	R40H3541
	Ra	WG	15 " x 7 "	4597 - 383	R700383	R40H597	R40H9200	R40H3540	R40H3541
1976									
F050, F055, F060	Fa	KH	14 " x 2-1/2 "	2060 - 361	Discontinued	R40H596	R40H9219	R40H3536	R40H3537
	Fa	KH	14 " x 2-1/2 "	2060 - 361	Discontinued	R40H596	R40H9219	R40H3536	R40H3537
F070	Fd	DN		7141 - D224	MD224[340]	69310693	60050153	NR	NR
F080, F090	Fd	DN		7149 - D236	MD236[341]	69310693	R40H5523	NR	NR
	Fd	DN		7149 - D236	MD236[341]	69310693	R40H5523	NR	NR
R170, R175	Ra	KH	15 " x 5 "	4646 - 400	R700400	R40H595	R40H9220	R40H3538	R40H3539
	Ra	KH	15 " x 5 "	4646 - 400	R700400	R40H595	R40H9220	R40H3538	R40H3539
	Ra	KH	15 " x 5 "	4646 - 400	R700400	R40H595	R40H9220	R40H3538	R40H3539
	Ra	WG	15 " x 5 "	1252 - 346	R700346	R40H597	R40H9200	R40H3540	R40H3541
	Ra	WG	15 " x 5 "	1252 - 346	R700346	R40H597	R40H9200	R40H3540	R40H3541
R185	Ra	WG	15 " x 6 "	4596 - 381	R700381	R40H597	R40H9200	R40H3540	R40H3541
	Ra	WG	15 " x 6 "	4596 - 381	R700381	R40H597	R40H9200	R40H3540	R40H3541
	Ra	WG	15 " x 7 "	4597 - 383	R700383	R40H597	R40H9200	R40H3540	R40H3541
	Ra	WG	15 " x 7 "	4597 - 383	R700383	R40H597	R40H9200	R40H3540	R40H3541
Single System									
F070	Fa	WG	15 " x 3 "	1245C - 321	R700321	R40H521	R40H9237	R40H3502	R40H3503
	Fa	WG	15 " x 3 "	1245C - 321	R700321	R40H521	R40H9237	R40H3502	R40H3503
	Fa	WG	15 " x 3 "	1245C - 321	R700321	R40H521	R40H9237	R40H3502	R40H3503
	Fa	WG	15 " x 3 "	1245C - 321	R700321	R40H521	R40H9237	R40H3502	R40H3503
Split System									
F070	Fa	WG	15 " x 3 "	1245C - 321	R700321	R40H521	R40H9237	R40H3502	R40H3503
	Fa	WG	15 " x 3 "	1245C - 321	R700321	R40H521	R40H9237	R40H3502	R40H3503
	Fa	WG	15 " x 3 "	1245C - 321	R700321	R40H521	R40H9237	R40H3502	R40H3503
	Fa	WG	15 " x 3 "	1245C - 321	R700321	R40H521	R40H9237	R40H3502	R40H3503
Split System									
F090, F120	Fa	WG	15 " x 3 "	1245C - 321	R700321	R40H521	R40H9237	R40H3502	R40H3503
	Fa	WG	15 " x 3 "	1245C - 321	R700321	R40H521	R40H9237	R40H3502	R40H3503
	Fa	WG	15 " x 3 "	1245C - 321	R700321	R40H521	R40H9237	R40H3502	R40H3503
	Fa	WG	15 " x 3 "	1245C - 321	R700321	R40H521	R40H9237	R40H3502	R40H3503
1975									
F050, F055, F060	Fa	KH	14 " x 2-1/2 "	2060 - 361	Discontinued	R40H596	R40H9219	R40H3536	R40H3537
	Fa	KH	14 " x 2-1/2 "	2060 - 361	Discontinued	R40H596	R40H9219	R40H3536	R40H3537
F070	Fd	DN		7141 - D224	MD224[340]	69310693	60050153	NR	NR
F080, F090	Fd	DN		7149 - D236	MD236[341]	69310693	R40H5523	NR	NR
	Fd	DN		7149 - D236	MD236[341]	69310693	R40H5523	NR	NR
R170, R175	Ra	KH	15 " x 5 "	4646 - 400	R700400	R40H595	R40H9220	R40H3538	R40H3539
	Ra	KH	15 " x 5 "	4646 - 400	R700400	R40H595	R40H9220	R40H3538	R40H3539
	Ra	KH	15 " x 5 "	4646 - 400	R700400	R40H595	R40H9220	R40H3538	R40H3539
	Ra	WG	15 " x 5 "	1252 - 346	R700346	R40H597	R40H9200	R40H3540	R40H3541
	Ra	WG	15 " x 5 "	1252 - 346	R700346	R40H597	R40H9200	R40H3540	R40H3541
R185	Ra	WG	15 " x 6 "	4596 - 381	R700381	R40H597	R40H9200	R40H3540	R40H3541
	Ra	WG	15 " x 6 "	4596 - 381	R700381	R40H597	R40H9200	R40H3540	R40H3541
	Ra	WG	15 " x 7 "	4597 - 383	R700383	R40H597	R40H9200	R40H3540	R40H3541
	Ra	WG	15 " x 7 "	4597 - 383	R700383	R40H597	R40H9200	R40H3540	R40H3541

9 - 6 Stud, Dayton Rotor, Hat Style
42 - 6 Stud, Dayton Rotor, "U" Style
341 - Use 69160445 for Disc Pad Retainer Clip
37 - Also available as a New unit
186 - 10 Stud
358 - Split System
41 - Aluminum piston
340 - Use 69160457 for Disc Pad Retainer Clip

MERITOR DRUM OR ROTOR NO.	CALIPER OR CYLINDER BORE SIZE	MERITOR CALIPER OR WHEEL CYLINDER (LEFT)	MERITOR CALIPER OR WHEEL CYLINDER (RIGHT)	MERITOR CALIPER OR WHEEL CYLINDER REPAIR KIT	MERITOR CALIPER PISTON	MERITOR MASTER CYLINDER	MERITOR MASTER CYLINDER KIT	MERITOR BRAKE HOSE (LEFT)	MERITOR BRAKE HOSE (RIGHT)
									FORD(Cont.)
LN600 SERIES: LOUISVILLE 94.4 BBC SHORT CONVENTIONAL CHASSIS CAB(Cont.)									
-	1-1/8 "	R4133719	R4133718	R4166926	NR	N/A[358]	R4122688	-	-
-	1-1/8 "	R4133716	R4133717	R4166926	NR	-	-	-	-
-	1-1/8 "	R4133714	R4133715	R4166926	NR	-	-	-	-
23-122700-002[9]	2-1/2 "	R424244X	R424244X[37]	60050266	69270757[41]	-	-	-	-
23-122691-002[42]	2-7/8 "	60050145X	60050145X[37]	60050146	69270702[41]	-	-	-	-
23-122703-002[186]	2-7/8 "	60050145X	60050145X[37]	60050146	69270702[41]	-	-	-	-
-	1-1/4 "	R4133581	R4133581	R4166923	NR	-	-	-	-
-	1-1/4 "	R4133581	R4133582	R4166923	NR	-	-	-	-
-	1-1/4 "	R4133720	R4133721	R4166923	NR	-	-	-	-
-	1-1/4 "	R4133720	R4133721	R4166923	NR	-	-	-	-
-	1-1/2 "	R4033607	R4033607	R4166818	NR	-	-	-	-
-	1-5/8 "	R4133606	R4133606	R415193	NR	-	-	-	-
-	1-1/2 "	R4033607	R4033607	R4166818	NR	-	-	-	-
-	1-5/8 "	R4133338	R4133338	R4166689	NR	-	-	-	-
-	1-5/8 "	R4133338	R4133338	R4166689	NR	-	-	-	-
-	1-5/8 "	R4133338	R4133338	R4166689	NR	-	-	-	-
-	1-5/8 "	R4133338	R4133338	R4166689	NR	-	-	-	-
-	1-3/4 "	R4133400	R4133400	R4166917	NR	-	-	-	-
-	1-3/4 "	R4133400	R4133400	R4166917	NR	-	-	-	-
-	1.09375	R4133484	R4133485	R4166819	NR	-	-	-	-
-	1.09375	R4133484	R4133485	R4166819	NR	-	-	-	-
23-122700-002[9]	2-1/2 "	R424244X	R424244X[37]	60050266	69270757[41]	-	-	-	-
23-122691-002[42]	2-7/8 "	60050145X	60050145X[37]	60050146	69270702[41]	-	-	-	-
23-122703-002[186]	2-7/8 "	60050145X	60050145X[37]	60050146	69270702[41]	-	-	-	-
-	1-1/2 "	R4033607	R4033607	R4166818	NR	-	-	-	-
-	1-5/8 "	R4133606	R4133606	R415193	NR	-	-	-	-
-	1-1/2 "	R4033607	R4033607	R4166818	NR	-	-	-	-
-	1-5/8 "	R4133338	R4133338	R4166689	NR	-	-	-	-
-	1-5/8 "	R4133338	R4133338	R4166689	NR	-	-	-	-
-	1-5/8 "	R4133338	R4133338	R4166689	NR	-	-	-	-
-	1-5/8 "	R4133338	R4133338	R4166689	NR	-	-	-	-
-	1-3/4 "	R4133400	R4133400	R4166917	NR	-	-	-	-
-	1-3/4 "	R4133400	R4133400	R4166917	NR	-	-	-	-
-	1-1/8 "	R4133714	R4133715	R4166926	NR	-	-	-	-
-	1-1/8 "	R4133716	R4133717	R4166926	NR	-	-	-	-
-	1-1/8 "	R4133714	R4133715	R4166926	NR	-	-	-	-
-	1-1/8 "	R4133716	R4133717	R4166926	NR	-	-	-	-
-	1-1/8 "	R4133714	R4133715	R4166926	NR	N/A[358]	R4122688	-	-
-	1-1/8 "	R4133719	R4133718	R4166926	NR	N/A[358]	R4122688	-	-
-	1-1/8 "	R4133714	R4133715	R4166926	NR	N/A[358]	R4122688	-	-
-	1-1/8 "	R4133719	R4133718	R4166926	NR	N/A[358]	R4122688	-	-
-	1-1/4 "	R4133720	R4133721	R4166923	NR	-	-	-	-
-	1-1/4 "	R4133581	R4133581	R4166923	NR	-	-	-	-
-	1-1/4 "	R4133581	R4133582	R4166923	NR	-	-	-	-
-	1-1/4 "	R4133720	R4133721	R4166923	NR	-	-	-	-
-	1.09375	R4133484	R4133485	R4166819	NR	-	-	-	-
-	1.09375	R4133484	R4133485	R4166819	NR	-	-	-	-
23-122700-002[9]	2-1/2 "	R424244X	R424244X[37]	60050266	69270757[41]	-	-	-	-
23-122691-002[42]	2-7/8 "	60050145X	60050145X[37]	60050146	69270702[41]	-	-	-	-
23-122703-002[186]	2-7/8 "	60050145X	60050145X[37]	60050146	69270702[41]	-	-	-	-
-	1-5/8 "	R4133606	R4133606	R415193	NR	-	-	-	-
-	1-1/2 "	R4033607	R4033607	R4166818	NR	-	-	-	-
-	1-1/2 "	R4033607	R4033607	R4166818	NR	-	-	-	-
-	1-5/8 "	R4133338	R4133338	R4166689	NR	-	-	-	-
-	1-5/8 "	R4133338	R4133338	R4166689	NR	-	-	-	-
-	1-5/8 "	R4133338	R4133338	R4166689	NR	-	-	-	-
-	1-5/8 "	R4133338	R4133338	R4166689	NR	-	-	-	-
-	1-3/4 "	R4133400	R4133400	R4166917	NR	-	-	-	-
-	1-3/4 "	R4133400	R4133400	R4166917	NR	-	-	-	-

MAKE MODEL YEAR AXLE CODE AXLE WEIGHT	AXLE & BRK. TYPE	BRK. MFG.	BRAKE SIZE	FMSI	MERITOR DISC PAD OR BRAKE SHOE	MERITOR GUIDE PIN OR RETURN SPRING KIT	MERITOR CALIPER HWD. KIT OR RETURN SPRING KIT	MERITOR ADJUSTER KIT (LEFT WHEEL)	MERITOR ADJUSTER KIT (RIGHT WHEEL)
FORD(Cont.)									
LN600 SERIES: LOUISVILLE 94.4 BBC SHORT CONVENTIONAL CHASSIS CAB(Cont.)									
1975									
Single System									
F070	Fa	WG	15 " x 3 "	1245C - 321	R700321	R40H521	R40H9237	R40H3502	R40H3503
	Fa	WG	15 " x 3 "	1245C - 321	R700321	R40H521	R40H9237	R40H3502	R40H3503
	Fa	WG	15 " x 3 "	1245C - 321	R700321	R40H521	R40H9237	R40H3502	R40H3503
	Fa	WG	15 " x 3 "	1245C - 321	R700321	R40H521	R40H9237	R40H3502	R40H3503
Split System									
F070	Fa	WG	15 " x 3 "	1245C - 321	R700321	R40H521	R40H9237	R40H3502	R40H3503
	Fa	WG	15 " x 3 "	1245C - 321	R700321	R40H521	R40H9237	R40H3502	R40H3503
	Fa	WG	15 " x 3 "	1245C - 321	R700321	R40H521	R40H9237	R40H3502	R40H3503
	Fa	WG	15 " x 3 "	1245C - 321	R700321	R40H521	R40H9237	R40H3502	R40H3503
Split System									
F090, F120	Fa	WG	15 " x 3 "	1245C - 321	R700321	R40H521	R40H9237	R40H3502	R40H3503
	Fa	WG	15 " x 3 "	1245C - 321	R700321	R40H521	R40H9237	R40H3502	R40H3503
	Fa	WG	15 " x 3 "	1245C - 321	R700321	R40H521	R40H9237	R40H3502	R40H3503
	Fa	WG	15 " x 3 "	1245C - 321	R700321	R40H521	R40H9237	R40H3502	R40H3503
1974									
F050, F055, F060	Fa	KH	14 " x 2-1/2 "	2060 - 361	Discontinued	R40H596	R40H9219	R40H3536	R40H3537
	Fa	KH	14 " x 2-1/2 "	2060 - 361	Discontinued	R40H596	R40H9219	R40H3536	R40H3537
F070	Fd	DN		7141 - D224	MD224[340]	69310693	60050153	NR	NR
F080, F090	Fd	DN		7149 - D236	MD236[341]	69310693	R40H5523	NR	NR
	Fd	DN		7149 - D236	MD236[341]	69310693	R40H5523	NR	NR
R170, R175	Ra	KH	15 " x 5 "	4646 - 400	R700400	R40H595	R40H9220	R40H3538	R40H3539
	Ra	KH	15 " x 5 "	4646 - 400	R700400	R40H595	R40H9220	R40H3538	R40H3539
	Ra	KH	15 " x 5 "	4646 - 400	R700400	R40H595	R40H9220	R40H3538	R40H3539
	Ra	WG	15 " x 5 "	1252 - 346	R700346	R40H597	R40H9200	R40H3540	R40H3541
	Ra	WG	15 " x 5 "	1252 - 346	R700346	R40H597	R40H9200	R40H3540	R40H3541
R185	Ra	WG	15 " x 6 "	4596 - 381	R700381	R40H597	R40H9200	R40H3540	R40H3541
	Ra	WG	15 " x 6 "	4596 - 381	R700381	R40H597	R40H9200	R40H3540	R40H3541
	Ra	WG	15 " x 7 "	4597 - 383	R700383	R40H597	R40H9200	R40H3540	R40H3541
	Ra	WG	15 " x 7 "	4597 - 383	R700383	R40H597	R40H9200	R40H3540	R40H3541
Single System									
F070	Fa	WG	15 " x 3 "	1245C - 321	R700321	R40H521	R40H9237	R40H3502	R40H3503
	Fa	WG	15 " x 3 "	1245C - 321	R700321	R40H521	R40H9237	R40H3502	R40H3503
	Fa	WG	15 " x 3 "	1245C - 321	R700321	R40H521	R40H9237	R40H3502	R40H3503
	Fa	WG	15 " x 3 "	1245C - 321	R700321	R40H521	R40H9237	R40H3502	R40H3503
Split System									
F070	Fa	WG	15 " x 3 "	1245C - 321	R700321	R40H521	R40H9237	R40H3502	R40H3503
	Fa	WG	15 " x 3 "	1245C - 321	R700321	R40H521	R40H9237	R40H3502	R40H3503
	Fa	WG	15 " x 3 "	1245C - 321	R700321	R40H521	R40H9237	R40H3502	R40H3503
	Fa	WG	15 " x 3 "	1245C - 321	R700321	R40H521	R40H9237	R40H3502	R40H3503
Split System									
F090, F120	Fa	WG	15 " x 3 "	1245C - 321	R700321	R40H521	R40H9237	R40H3502	R40H3503
	Fa	WG	15 " x 3 "	1245C - 321	R700321	R40H521	R40H9237	R40H3502	R40H3503
	Fa	WG	15 " x 3 "	1245C - 321	R700321	R40H521	R40H9237	R40H3502	R40H3503
	Fa	WG	15 " x 3 "	1245C - 321	R700321	R40H521	R40H9237	R40H3502	R40H3503
1973									
F050, F055, F060	Fa	KH	14 " x 2-1/2 "	2060 - 361	Discontinued	R40H596	R40H9219	R40H3536	R40H3537
	Fa	KH	14 " x 2-1/2 "	2060 - 361	Discontinued	R40H596	R40H9219	R40H3536	R40H3537
F070	Fd	DN		7141 - D224	MD224[340]	69310693	60050153	NR	NR
F080, F090	Fd	DN		7149 - D236	MD236[341]	69310693	R40H5523	NR	NR
	Fd	DN		7149 - D236	MD236[341]	69310693	R40H5523	NR	NR
R170, R175	Ra	KH	15 " x 5 "	4646 - 400	R700400	R40H595	R40H9220	R40H3538	R40H3539
	Ra	KH	15 " x 5 "	4646 - 400	R700400	R40H595	R40H9220	R40H3538	R40H3539
	Ra	KH	15 " x 5 "	4646 - 400	R700400	R40H595	R40H9220	R40H3538	R40H3539
	Ra	WG	15 " x 5 "	1252 - 346	R700346	R40H597	R40H9200	R40H3540	R40H3541
	Ra	WG	15 " x 5 "	1252 - 346	R700346	R40H597	R40H9200	R40H3540	R40H3541
R185	Ra	WG	15 " x 6 "	4596 - 381	R700381	R40H597	R40H9200	R40H3540	R40H3541
	Ra	WG	15 " x 6 "	4596 - 381	R700381	R40H597	R40H9200	R40H3540	R40H3541
	Ra	WG	15 " x 7 "	4597 - 383	R700383	R40H597	R40H9200	R40H3540	R40H3541
	Ra	WG	15 " x 7 "	4597 - 383	R700383	R40H597	R40H9200	R40H3540	R40H3541
Single System									
F070	Fa	WG	15 " x 3 "	1245C - 321	R700321	R40H521	R40H9237	R40H3502	R40H3503
	Fa	WG	15 " x 3 "	1245C - 321	R700321	R40H521	R40H9237	R40H3502	R40H3503
	Fa	WG	15 " x 3 "	1245C - 321	R700321	R40H521	R40H9237	R40H3502	R40H3503

9 - 6 Stud, Dayton Rotor, Hat Style
42 - 6 Stud, Dayton Rotor, "U" Style
341 - Use 69160445 for Disc Pad Retainer Clip
37 - Also available as a New unit
186 - 10 Stud
358 - Split System
41 - Aluminum piston
340 - Use 69160457 for Disc Pad Retainer Clip

MERITOR DRUM OR ROTOR NO.	CALIPER OR CYLINDER BORE SIZE	MERITOR CALIPER OR WHEEL CYLINDER (LEFT)	MERITOR CALIPER OR WHEEL CYLINDER (RIGHT)	MERITOR CALIPER OR WHEEL CYLINDER REPAIR KIT	MERITOR CALIPER PISTON	MERITOR MASTER CYLINDER	MERITOR MASTER CYLINDER KIT	MERITOR BRAKE HOSE (LEFT)	MERITOR BRAKE HOSE (RIGHT)
									FORD(Cont.)
LN600 SERIES: LOUISVILLE 94.4 BBC SHORT CONVENTIONAL CHASSIS CAB(Cont.)									
-	1-1/8 "	R4133716	R4133717	R4166926	NR	-	-	-	-
-	1-1/8 "	R4133714	R4133715	R4166926	NR	-	-	-	-
-	1-1/8 "	R4133714	R4133715	R4166926	NR	-	-	-	-
-	1-1/8 "	R4133716	R4133717	R4166926	NR	-	-	-	-
-	1-1/8 "	R4133719	R4133718	R4166926	NR	N/A[358]	R4122688	-	-
-	1-1/8 "	R4133714	R4133715	R4166926	NR	N/A[358]	R4122688	-	-
-	1-1/8 "	R4133714	R4133715	R4166926	NR	N/A[358]	R4122688	-	-
-	1-1/8 "	R4133719	R4133718	R4166926	NR	N/A[358]	R4122688	-	-
-	1-1/4 "	R4133720	R4133721	R4166923	NR	-	-	-	-
-	1-1/4 "	R4133581	R4133582	R4166923	NR	-	-	-	-
-	1-1/4 "	R4133720	R4133721	R4166923	NR	-	-	-	-
-	1-1/4 "	R4133581	R4133581	R4166923	NR	-	-	-	-
-	1.09375	R4133484	R4133485	R4166819	NR	-	-	-	-
-	1.09375	R4133484	R4133485	R4166819	NR	-	-	-	-
23-122700-002[9]	2-1/2 "	R424244X	R424244X[37]	60050266	69270757[41]	-	-	-	-
23-122691-002[42]	2-7/8 "	60050145X	60050145X[37]	60050146	69270702[41]	-	-	-	-
23-122703-002[186]	2-7/8 "	60050145X	60050145X[37]	60050146	69270702[41]	-	-	-	-
-	1-5/8 "	R4133606	R4133606	R415193	NR	-	-	-	-
-	1-1/2 "	R4033607	R4033607	R4166818	NR	-	-	-	-
-	1-1/2 "	R4033607	R4033607	R4166818	NR	-	-	-	-
-	1-5/8 "	R4133338	R4133338	R4166689	NR	-	-	-	-
-	1-5/8 "	R4133338	R4133338	R4166689	NR	-	-	-	-
-	1-5/8 "	R4133338	R4133338	R4166689	NR	-	-	-	-
-	1-5/8 "	R4133338	R4133338	R4166689	NR	-	-	-	-
-	1-3/4 "	R4133400	R4133400	R4166917	NR	-	-	-	-
-	1-3/4 "	R4133400	R4133400	R4166917	NR	-	-	-	-
-	1-1/8 "	R4133714	R4133715	R4166926	NR	-	-	-	-
-	1-1/8 "	R4133716	R4133717	R4166926	NR	-	-	-	-
-	1-1/8 "	R4133714	R4133715	R4166926	NR	-	-	-	-
-	1-1/8 "	R4133716	R4133717	R4166926	NR	-	-	-	-
-	1-1/8 "	R4133714	R4133715	R4166926	NR	N/A[358]	R4122688	-	-
-	1-1/8 "	R4133719	R4133718	R4166926	NR	N/A[358]	R4122688	-	-
-	1-1/8 "	R4133714	R4133715	R4166926	NR	N/A[358]	R4122688	-	-
-	1-1/8 "	R4133719	R4133718	R4166926	NR	N/A[358]	R4122688	-	-
-	1-1/4 "	R4133720	R4133721	R4166923	NR	-	-	-	-
-	1-1/4 "	R4133581	R4133581	R4166923	NR	-	-	-	-
-	1-1/4 "	R4133581	R4133582	R4166923	NR	-	-	-	-
-	1-1/4 "	R4133720	R4133721	R4166923	NR	-	-	-	-
-	1.09375	R4133484	R4133485	R4166819	NR	-	-	-	-
-	1.09375	R4133484	R4133485	R4166819	NR	-	-	-	-
23-122700-002[9]	2-1/2 "	R424244X	R424244X[37]	60050266	69270757[41]	-	-	-	-
23-122691-002[42]	2-7/8 "	60050145X	60050145X[37]	60050146	69270702[41]	-	-	-	-
23-122703-002[186]	2-7/8 "	60050145X	60050145X[37]	60050146	69270702[41]	-	-	-	-
-	1-5/8 "	R4133606	R4133606	R415193	NR	-	-	-	-
-	1-1/2 "	R4033607	R4033607	R4166818	NR	-	-	-	-
-	1-1/2 "	R4033607	R4033607	R4166818	NR	-	-	-	-
-	1-5/8 "	R4133338	R4133338	R4166689	NR	-	-	-	-
-	1-5/8 "	R4133338	R4133338	R4166689	NR	-	-	-	-
-	1-5/8 "	R4133338	R4133338	R4166689	NR	-	-	-	-
-	1-5/8 "	R4133338	R4133338	R4166689	NR	-	-	-	-
-	1-3/4 "	R4133400	R4133400	R4166917	NR	-	-	-	-
-	1-3/4 "	R4133400	R4133400	R4166917	NR	-	-	-	-
-	1-1/8 "	R4133716	R4133717	R4166926	NR	-	-	-	-
-	1-1/8 "	R4133714	R4133715	R4166926	NR	-	-	-	-
-	1-1/8 "	R4133716	R4133717	R4166926	NR	-	-	-	-

MAKE MODEL YEAR AXLE CODE AXLE WEIGHT	AXLE & BRK. TYPE	BRK. MFG.	BRAKE SIZE	FMSI	MERITOR DISC PAD OR BRAKE SHOE	MERITOR GUIDE PIN OR RETURN SPRING KIT	MERITOR CALIPER HWD. KIT OR RETURN SPRING KIT	MERITOR ADJUSTER KIT (LEFT WHEEL)	MERITOR ADJUSTER KIT (RIGHT WHEEL)
FORD(Cont.)									
LN600 SERIES: LOUISVILLE 94.4 BBC SHORT CONVENTIONAL CHASSIS CAB(Cont.)									
1973	Fa	WG	15 " x 3 "	1245C - 321	R700321	R40H521	R40H9237	R40H3502	R40H3503
Split System									
F070	Fa	WG	15 " x 3 "	1245C - 321	R700321	R40H521	R40H9237	R40H3502	R40H3503
	Fa	WG	15 " x 3 "	1245C - 321	R700321	R40H521	R40H9237	R40H3502	R40H3503
	Fa	WG	15 " x 3 "	1245C - 321	R700321	R40H521	R40H9237	R40H3502	R40H3503
	Fa	WG	15 " x 3 "	1245C - 321	R700321	R40H521	R40H9237	R40H3502	R40H3503
Split System									
F090, F120	Fa	WG	15 " x 3 "	1245C - 321	R700321	R40H521	R40H9237	R40H3502	R40H3503
	Fa	WG	15 " x 3 "	1245C - 321	R700321	R40H521	R40H9237	R40H3502	R40H3503
	Fa	WG	15 " x 3 "	1245C - 321	R700321	R40H521	R40H9237	R40H3502	R40H3503
	Fa	WG	15 " x 3 "	1245C - 321	R700321	R40H521	R40H9237	R40H3502	R40H3503
1972									
F050, F055, F060	Fa	KH	14 " x 2-1/2 "	2060 - 361	Discontinued	R40H596	R40H9219	R40H3536	R40H3537
	Fa	KH	14 " x 2-1/2 "	2060 - 361	Discontinued	R40H596	R40H9219	R40H3536	R40H3537
F070	Fd	DN		7141 - D224	MD224[340]	69310693	60050153	NR	NR
F080, F090	Fd	DN		7149 - D236	MD236[341]	69310693	R40H5523	NR	NR
	Fd	DN		7149 - D236	MD236[341]	69310693	R40H5523	NR	NR
R170, R175	Ra	KH	15 " x 5 "	4646 - 400	R700400	R40H595	R40H9220	R40H3538	R40H3539
	Ra	KH	15 " x 5 "	4646 - 400	R700400	R40H595	R40H9220	R40H3538	R40H3539
	Ra	KH	15 " x 5 "	4646 - 400	R700400	R40H595	R40H9220	R40H3538	R40H3539
	Ra	WG	15 " x 5 "	1252 - 346	R700346	R40H597	R40H9200	R40H3540	R40H3541
	Ra	WG	15 " x 5 "	1252 - 346	R700346	R40H597	R40H9200	R40H3540	R40H3541
R185	Ra	WG	15 " x 6 "	4596 - 381	R700381	R40H597	R40H9200	R40H3540	R40H3541
	Ra	WG	15 " x 6 "	4596 - 381	R700381	R40H597	R40H9200	R40H3540	R40H3541
	Ra	WG	15 " x 7 "	4597 - 383	R700383	R40H597	R40H9200	R40H3540	R40H3541
	Ra	WG	15 " x 7 "	4597 - 383	R700383	R40H597	R40H9200	R40H3540	R40H3541
Single System									
F070	Fa	WG	15 " x 3 "	1245C - 321	R700321	R40H521	R40H9237	R40H3502	R40H3503
	Fa	WG	15 " x 3 "	1245C - 321	R700321	R40H521	R40H9237	R40H3502	R40H3503
	Fa	WG	15 " x 3 "	1245C - 321	R700321	R40H521	R40H9237	R40H3502	R40H3503
	Fa	WG	15 " x 3 "	1245C - 321	R700321	R40H521	R40H9237	R40H3502	R40H3503
Split System									
F070	Fa	WG	15 " x 3 "	1245C - 321	R700321	R40H521	R40H9237	R40H3502	R40H3503
	Fa	WG	15 " x 3 "	1245C - 321	R700321	R40H521	R40H9237	R40H3502	R40H3503
	Fa	WG	15 " x 3 "	1245C - 321	R700321	R40H521	R40H9237	R40H3502	R40H3503
	Fa	WG	15 " x 3 "	1245C - 321	R700321	R40H521	R40H9237	R40H3502	R40H3503
Split System									
F090, F120	Fa	WG	15 " x 3 "	1245C - 321	R700321	R40H521	R40H9237	R40H3502	R40H3503
	Fa	WG	15 " x 3 "	1245C - 321	R700321	R40H521	R40H9237	R40H3502	R40H3503
	Fa	WG	15 " x 3 "	1245C - 321	R700321	R40H521	R40H9237	R40H3502	R40H3503
	Fa	WG	15 " x 3 "	1245C - 321	R700321	R40H521	R40H9237	R40H3502	R40H3503
1971									
F050, F055, F060	Fa	KH	14 " x 2-1/2 "	2060 - 361	Discontinued	R40H596	R40H9219	R40H3536	R40H3537
	Fa	KH	14 " x 2-1/2 "	2060 - 361	Discontinued	R40H596	R40H9219	R40H3536	R40H3537
F070	Fd	DN		7141 - D224	MD224[340]	69310693	60050153	NR	NR
F080, F090	Fd	DN		7149 - D236	MD236[341]	69310693	R40H5523	NR	NR
	Fd	DN		7149 - D236	MD236[341]	69310693	R40H5523	NR	NR
R170, R175	Ra	KH	15 " x 5 "	4646 - 400	R700400	R40H595	R40H9220	R40H3538	R40H3539
	Ra	KH	15 " x 5 "	4646 - 400	R700400	R40H595	R40H9220	R40H3538	R40H3539
	Ra	KH	15 " x 5 "	4646 - 400	R700400	R40H595	R40H9220	R40H3538	R40H3539
	Ra	WG	15 " x 5 "	1252 - 346	R700346	R40H597	R40H9200	R40H3540	R40H3541
	Ra	WG	15 " x 5 "	1252 - 346	R700346	R40H597	R40H9200	R40H3540	R40H3541
R185	Ra	WG	15 " x 6 "	4596 - 381	R700381	R40H597	R40H9200	R40H3540	R40H3541
	Ra	WG	15 " x 6 "	4596 - 381	R700381	R40H597	R40H9200	R40H3540	R40H3541
	Ra	WG	15 " x 7 "	4597 - 383	R700383	R40H597	R40H9200	R40H3540	R40H3541
	Ra	WG	15 " x 7 "	4597 - 383	R700383	R40H597	R40H9200	R40H3540	R40H3541
Single System									
F070	Fa	WG	15 " x 3 "	1245C - 321	R700321	R40H521	R40H9237	R40H3502	R40H3503
	Fa	WG	15 " x 3 "	1245C - 321	R700321	R40H521	R40H9237	R40H3502	R40H3503
	Fa	WG	15 " x 3 "	1245C - 321	R700321	R40H521	R40H9237	R40H3502	R40H3503
	Fa	WG	15 " x 3 "	1245C - 321	R700321	R40H521	R40H9237	R40H3502	R40H3503
Split System									
F070	Fa	WG	15 " x 3 "	1245C - 321	R700321	R40H521	R40H9237	R40H3502	R40H3503
	Fa	WG	15 " x 3 "	1245C - 321	R700321	R40H521	R40H9237	R40H3502	R40H3503

9 - 6 Stud, Dayton Rotor, Hat Style
42 - 6 Stud, Dayton Rotor, "U" Style
341 - Use 69160445 for Disc Pad Retainer Clip
37 - Also available as a New unit
186 - 10 Stud
358 - Split System
41 - Aluminum piston
340 - Use 69160457 for Disc Pad Retainer Clip

MERITOR DRUM OR ROTOR NO.	CALIPER OR CYLINDER BORE SIZE	MERITOR CALIPER OR WHEEL CYLINDER (LEFT)	MERITOR CALIPER OR WHEEL CYLINDER (RIGHT)	MERITOR CALIPER OR WHEEL CYLINDER REPAIR KIT	MERITOR CALIPER PISTON	MERITOR MASTER CYLINDER	MERITOR MASTER CYLINDER KIT	MERITOR BRAKE HOSE (LEFT)	MERITOR BRAKE HOSE (RIGHT)
									FORD(Cont.)
LN600 SERIES: LOUISVILLE 94.4 BBC SHORT CONVENTIONAL CHASSIS CAB(Cont.)									
-	1-1/8 "	R4133714	R4133715	R4166926	NR	-	-	-	-
-	1-1/8 "	R4133714	R4133715	R4166926	NR	N/A[358]	R4122688	-	-
-	1-1/8 "	R4133719	R4133718	R4166926	NR	N/A[358]	R4122688	-	-
-	1-1/8 "	R4133714	R4133715	R4166926	NR	N/A[358]	R4122688	-	-
-	1-1/8 "	R4133719	R4133718	R4166926	NR	N/A[358]	R4122688	-	-
-	1-1/4 "	R4133720	R4133721	R4166923	NR	-	-	-	-
-	1-1/4 "	R4133581	R4133581	R4166923	NR	-	-	-	-
-	1-1/4 "	R4133720	R4133721	R4166923	NR	-	-	-	-
-	1-1/4 "	R4133581	R4133582	R4166923	NR	-	-	-	-
-	1.09375	R4133484	R4133485	R4166819	NR	-	-	-	-
-	1.09375	R4133484	R4133485	R4166819	NR	-	-	-	-
23-122700-002[9]	2-1/2 "	R424244X	R424244X[37]	60050266	69270757[41]	-	-	-	-
23-122691-002[42]	2-7/8 "	60050145X	60050145X[37]	60050146	69270702[41]	-	-	-	-
23-122703-002[186]	2-7/8 "	60050145X	60050145X[37]	60050146	69270702[41]	-	-	-	-
-	1-1/2 "	R4033607	R4033607	R4166818	NR	-	-	-	-
-	1-5/8 "	R4133606	R4133606	R415193	NR	-	-	-	-
-	1-1/2 "	R4033607	R4033607	R4166818	NR	-	-	-	-
-	1-5/8 "	R4133338	R4133338	R4166689	NR	-	-	-	-
-	1-5/8 "	R4133338	R4133338	R4166689	NR	-	-	-	-
-	1-5/8 "	R4133338	R4133338	R4166689	NR	-	-	-	-
-	1-5/8 "	R4133338	R4133338	R4166689	NR	-	-	-	-
-	1-3/4 "	R4133400	R4133400	R4166917	NR	-	-	-	-
-	1-3/4 "	R4133400	R4133400	R4166917	NR	-	-	-	-
-	1-1/8 "	R4133716	R4133717	R4166926	NR	-	-	-	-
-	1-1/8 "	R4133714	R4133715	R4166926	NR	-	-	-	-
-	1-1/8 "	R4133714	R4133715	R4166926	NR	-	-	-	-
-	1-1/8 "	R4133716	R4133717	R4166926	NR	-	-	-	-
-	1-1/8 "	R4133714	R4133715	R4166926	NR	N/A[358]	R4122688	-	-
-	1-1/8 "	R4133719	R4133718	R4166926	NR	N/A[358]	R4122688	-	-
-	1-1/8 "	R4133714	R4133715	R4166926	NR	N/A[358]	R4122688	-	-
-	1-1/8 "	R4133719	R4133718	R4166926	NR	N/A[358]	R4122688	-	-
-	1-1/4 "	R4133720	R4133721	R4166923	NR	-	-	-	-
-	1-1/4 "	R4133581	R4133582	R4166923	NR	-	-	-	-
-	1-1/4 "	R4133581	R4133581	R4166923	NR	-	-	-	-
-	1-1/4 "	R4133720	R4133721	R4166923	NR	-	-	-	-
-	1.09375	R4133484	R4133485	R4166819	NR	-	-	-	-
-	1.09375	R4133484	R4133485	R4166819	NR	-	-	-	-
23-122700-002[9]	2-1/2 "	R424244X	R424244X[37]	60050266	69270757[41]	-	-	-	-
23-122691-002[42]	2-7/8 "	60050145X	60050145X[37]	60050146	69270702[41]	-	-	-	-
23-122703-002[186]	2-7/8 "	60050145X	60050145X[37]	60050146	69270702[41]	-	-	-	-
-	1-1/2 "	R4033607	R4033607	R4166818	NR	-	-	-	-
-	1-5/8 "	R4133606	R4133606	R415193	NR	-	-	-	-
-	1-1/2 "	R4033607	R4033607	R4166818	NR	-	-	-	-
-	1-5/8 "	R4133338	R4133338	R4166689	NR	-	-	-	-
-	1-5/8 "	R4133338	R4133338	R4166689	NR	-	-	-	-
-	1-5/8 "	R4133338	R4133338	R4166689	NR	-	-	-	-
-	1-5/8 "	R4133338	R4133338	R4166689	NR	-	-	-	-
-	1-3/4 "	R4133400	R4133400	R4166917	NR	-	-	-	-
-	1-3/4 "	R4133400	R4133400	R4166917	NR	-	-	-	-
-	1-1/8 "	R4133716	R4133717	R4166926	NR	-	-	-	-
-	1-1/8 "	R4133714	R4133715	R4166926	NR	-	-	-	-
-	1-1/8 "	R4133716	R4133717	R4166926	NR	-	-	-	-
-	1-1/8 "	R4133714	R4133715	R4166926	NR	-	-	-	-
-	1-1/8 "	R4133719	R4133718	R4166926	NR	N/A[358]	R4122688	-	-
-	1-1/8 "	R4133714	R4133715	R4166926	NR	N/A[358]	R4122688	-	-

MAKE MODEL YEAR AXLE CODE AXLE WEIGHT	AXLE & BRK. TYPE	BRK. MFG.	BRAKE SIZE	FMSI	MERITOR DISC PAD OR BRAKE SHOE	MERITOR GUIDE PIN OR RETURN SPRING KIT	MERITOR CALIPER HWD. KIT OR RETURN SPRING KIT	MERITOR ADJUSTER KIT (LEFT WHEEL)	MERITOR ADJUSTER KIT (RIGHT WHEEL)
FORD(Cont.)									
LN600 SERIES: LOUISVILLE 94.4 BBC SHORT CONVENTIONAL CHASSIS CAB(Cont.)									
1971									
	Fa	WG	15 " x 3 "	1245C - 321	R700321	R40H521	R40H9237	R40H3502	R40H3503
	Fa	WG	15 " x 3 "	1245C - 321	R700321	R40H521	R40H9237	R40H3502	R40H3503
Split System									
F090, F120	Fa	WG	15 " x 3 "	1245C - 321	R700321	R40H521	R40H9237	R40H3502	R40H3503
	Fa	WG	15 " x 3 "	1245C - 321	R700321	R40H521	R40H9237	R40H3502	R40H3503
	Fa	WG	15 " x 3 "	1245C - 321	R700321	R40H521	R40H9237	R40H3502	R40H3503
	Fa	WG	15 " x 3 "	1245C - 321	R700321	R40H521	R40H9237	R40H3502	R40H3503
1970									
F050, F055, F060	Fa	KH	14 " x 2-1/2 "	2060 - 361	Discontinued	R40H596	R40H9219	R40H3536	R40H3537
	Fa	KH	14 " x 2-1/2 "	2060 - 361	Discontinued	R40H596	R40H9219	R40H3536	R40H3537
F070	Fd	DN		7141 - D224	MD224[340]	69310693	60050153	NR	NR
F080, F090	Fd	DN		7149 - D236	MD236[341]	69310693	R40H5523	NR	NR
	Fd	DN		7149 - D236	MD236[341]	69310693	R40H5523	NR	NR
R170, R175	Ra	KH	15 " x 5 "	4646 - 400	R700400	R40H595	R40H9220	R40H3538	R40H3539
	Ra	KH	15 " x 5 "	4646 - 400	R700400	R40H595	R40H9220	R40H3538	R40H3539
	Ra	KH	15 " x 5 "	4646 - 400	R700400	R40H595	R40H9220	R40H3538	R40H3539
	Ra	WG	15 " x 5 "	1252 - 346	R700346	R40H597	R40H9200	R40H3540	R40H3541
	Ra	WG	15 " x 5 "	1252 - 346	R700346	R40H597	R40H9200	R40H3540	R40H3541
R185	Ra	WG	15 " x 6 "	4596 - 381	R700381	R40H597	R40H9200	R40H3540	R40H3541
	Ra	WG	15 " x 6 "	4596 - 381	R700381	R40H597	R40H9200	R40H3540	R40H3541
	Ra	WG	15 " x 7 "	4597 - 383	R700383	R40H597	R40H9200	R40H3540	R40H3541
	Ra	WG	15 " x 7 "	4597 - 383	R700383	R40H597	R40H9200	R40H3540	R40H3541
Single System									
F070	Fa	WG	15 " x 3 "	1245C - 321	R700321	R40H521	R40H9237	R40H3502	R40H3503
	Fa	WG	15 " x 3 "	1245C - 321	R700321	R40H521	R40H9237	R40H3502	R40H3503
	Fa	WG	15 " x 3 "	1245C - 321	R700321	R40H521	R40H9237	R40H3502	R40H3503
	Fa	WG	15 " x 3 "	1245C - 321	R700321	R40H521	R40H9237	R40H3502	R40H3503
Split System									
F070	Fa	WG	15 " x 3 "	1245C - 321	R700321	R40H521	R40H9237	R40H3502	R40H3503
	Fa	WG	15 " x 3 "	1245C - 321	R700321	R40H521	R40H9237	R40H3502	R40H3503
	Fa	WG	15 " x 3 "	1245C - 321	R700321	R40H521	R40H9237	R40H3502	R40H3503
	Fa	WG	15 " x 3 "	1245C - 321	R700321	R40H521	R40H9237	R40H3502	R40H3503
Split System									
F090, F120	Fa	WG	15 " x 3 "	1245C - 321	R700321	R40H521	R40H9237	R40H3502	R40H3503
	Fa	WG	15 " x 3 "	1245C - 321	R700321	R40H521	R40H9237	R40H3502	R40H3503
	Fa	WG	15 " x 3 "	1245C - 321	R700321	R40H521	R40H9237	R40H3502	R40H3503
	Fa	WG	15 " x 3 "	1245C - 321	R700321	R40H521	R40H9237	R40H3502	R40H3503
1969									
F050, F055, F060	Fa	KH	14 " x 2-1/2 "	2060 - 361	Discontinued	R40H596	R40H9219	R40H3536	R40H3537
	Fa	KH	14 " x 2-1/2 "	2060 - 361	Discontinued	R40H596	R40H9219	R40H3536	R40H3537
F070	Fd	DN		7141 - D224	MD224[340]	69310693	60050153	NR	NR
F080, F090	Fd	DN		7149 - D236	MD236[341]	69310693	R40H5523	NR	NR
	Fd	DN		7149 - D236	MD236[341]	69310693	R40H5523	NR	NR
R170, R175	Ra	KH	15 " x 5 "	4646 - 400	R700400	R40H595	R40H9220	R40H3538	R40H3539
	Ra	KH	15 " x 5 "	4646 - 400	R700400	R40H595	R40H9220	R40H3538	R40H3539
	Ra	KH	15 " x 5 "	4646 - 400	R700400	R40H595	R40H9220	R40H3538	R40H3539
	Ra	WG	15 " x 5 "	1252 - 346	R700346	R40H597	R40H9200	R40H3540	R40H3541
	Ra	WG	15 " x 5 "	1252 - 346	R700346	R40H597	R40H9200	R40H3540	R40H3541
R185	Ra	WG	15 " x 6 "	4596 - 381	R700381	R40H597	R40H9200	R40H3540	R40H3541
	Ra	WG	15 " x 6 "	4596 - 381	R700381	R40H597	R40H9200	R40H3540	R40H3541
	Ra	WG	15 " x 7 "	4597 - 383	R700383	R40H597	R40H9200	R40H3540	R40H3541
	Ra	WG	15 " x 7 "	4597 - 383	R700383	R40H597	R40H9200	R40H3540	R40H3541
Single System									
F070	Fa	WG	15 " x 3 "	1245C - 321	R700321	R40H521	R40H9237	R40H3502	R40H3503
	Fa	WG	15 " x 3 "	1245C - 321	R700321	R40H521	R40H9237	R40H3502	R40H3503
	Fa	WG	15 " x 3 "	1245C - 321	R700321	R40H521	R40H9237	R40H3502	R40H3503
	Fa	WG	15 " x 3 "	1245C - 321	R700321	R40H521	R40H9237	R40H3502	R40H3503
Split System									
F070	Fa	WG	15 " x 3 "	1245C - 321	R700321	R40H521	R40H9237	R40H3502	R40H3503
	Fa	WG	15 " x 3 "	1245C - 321	R700321	R40H521	R40H9237	R40H3502	R40H3503
	Fa	WG	15 " x 3 "	1245C - 321	R700321	R40H521	R40H9237	R40H3502	R40H3503
	Fa	WG	15 " x 3 "	1245C - 321	R700321	R40H521	R40H9237	R40H3502	R40H3503
Split System									
F090, F120	Fa	WG	15 " x 3 "	1245C - 321	R700321	R40H521	R40H9237	R40H3502	R40H3503

9 - 6 Stud, Dayton Rotor, Hat Style
42 - 6 Stud, Dayton Rotor, "U" Style
341 - Use 69160445 for Disc Pad Retainer Clip
37 - Also available as a New unit
186 - 10 Stud
358 - Split System
41 - Aluminum piston
340 - Use 69160457 for Disc Pad Retainer Clip

MERITOR DRUM OR ROTOR NO.	CALIPER OR CYLINDER BORE SIZE	MERITOR CALIPER OR WHEEL CYLINDER (LEFT)	MERITOR CALIPER OR WHEEL CYLINDER (RIGHT)	MERITOR CALIPER OR WHEEL CYLINDER REPAIR KIT	MERITOR CALIPER PISTON	MERITOR MASTER CYLINDER	MERITOR MASTER CYLINDER KIT	MERITOR BRAKE HOSE (LEFT)	MERITOR BRAKE HOSE (RIGHT)
									FORD(Cont.)
LN600 SERIES: LOUISVILLE 94.4 BBC SHORT CONVENTIONAL CHASSIS CAB(Cont.)									
-	1-1/8 "	R4133714	R4133715	R4166926	NR	N/A[358]	R4122688	-	-
-	1-1/8 "	R4133719	R4133718	R4166926	NR	N/A[358]	R4122688	-	-
-	1-1/4 "	R4133720	R4133721	R4166923	NR	-	-	-	-
-	1-1/4 "	R4133581	R4133582	R4166923	NR	-	-	-	-
-	1-1/4 "	R4133720	R4133721	R4166923	NR	-	-	-	-
-	1-1/4 "	R4133581	R4133581	R4166923	NR	-	-	-	-
-	1.09375	R4133484	R4133485	R4166819	NR	-	-	-	-
-	1.09375	R4133484	R4133485	R4166819	NR	-	-	-	-
23-122700-002[9]	2-1/2 "	R424244X	R424244X[37]	60050266	69270757[41]	-	-	-	-
23-122691-002[42]	2-7/8 "	60050145X	60050145X[37]	60050146	69270702[41]	-	-	-	-
23-122703-002[186]	2-7/8 "	60050145X	60050145X[37]	60050146	69270702[41]	-	-	-	-
-	1-1/2 "	R4033607	R4033607	R4166818	NR	-	-	-	-
-	1-5/8 "	R4133606	R4133606	R415193	NR	-	-	-	-
-	1-1/2 "	R4033607	R4033607	R4166818	NR	-	-	-	-
-	1-5/8 "	R4133338	R4133338	R4166689	NR	-	-	-	-
-	1-5/8 "	R4133338	R4133338	R4166689	NR	-	-	-	-
-	1-5/8 "	R4133338	R4133338	R4166689	NR	-	-	-	-
-	1-5/8 "	R4133338	R4133338	R4166689	NR	-	-	-	-
-	1-3/4 "	R4133400	R4133400	R4166917	NR	-	-	-	-
-	1-3/4 "	R4133400	R4133400	R4166917	NR	-	-	-	-
-	1-1/8 "	R4133716	R4133717	R4166926	NR	-	-	-	-
-	1-1/8 "	R4133716	R4133717	R4166926	NR	-	-	-	-
-	1-1/8 "	R4133714	R4133715	R4166926	NR	-	-	-	-
-	1-1/8 "	R4133714	R4133715	R4166926	NR	-	-	-	-
-	1-1/8 "	R4133714	R4133715	R4166926	NR	N/A[358]	R4122688	-	-
-	1-1/8 "	R4133719	R4133718	R4166926	NR	N/A[358]	R4122688	-	-
-	1-1/8 "	R4133719	R4133718	R4166926	NR	N/A[358]	R4122688	-	-
-	1-1/8 "	R4133714	R4133715	R4166926	NR	N/A[358]	R4122688	-	-
-	1-1/4 "	R4133720	R4133721	R4166923	NR	-	-	-	-
-	1-1/4 "	R4133581	R4133581	R4166923	NR	-	-	-	-
-	1-1/4 "	R4133720	R4133721	R4166923	NR	-	-	-	-
-	1-1/4 "	R4133581	R4133582	R4166923	NR	-	-	-	-
-	1.09375	R4133484	R4133485	R4166819	NR	-	-	-	-
-	1.09375	R4133484	R4133485	R4166819	NR	-	-	-	-
23-122700-002[9]	2-1/2 "	R424244X	R424244X[37]	60050266	69270757[41]	-	-	-	-
23-122703-002[186]	2-7/8 "	60050145X	60050145X[37]	60050146	69270702[41]	-	-	-	-
23-122691-002[42]	2-7/8 "	60050145X	60050145X[37]	60050146	69270702[41]	-	-	-	-
-	1-5/8 "	R4133606	R4133606	R415193	NR	-	-	-	-
-	1-1/2 "	R4033607	R4033607	R4166818	NR	-	-	-	-
-	1-1/2 "	R4033607	R4033607	R4166818	NR	-	-	-	-
-	1-5/8 "	R4133338	R4133338	R4166689	NR	-	-	-	-
-	1-5/8 "	R4133338	R4133338	R4166689	NR	-	-	-	-
-	1-5/8 "	R4133338	R4133338	R4166689	NR	-	-	-	-
-	1-5/8 "	R4133338	R4133338	R4166689	NR	-	-	-	-
-	1-3/4 "	R4133400	R4133400	R4166917	NR	-	-	-	-
-	1-3/4 "	R4133400	R4133400	R4166917	NR	-	-	-	-
-	1-1/8 "	R4133716	R4133717	R4166926	NR	-	-	-	-
-	1-1/8 "	R4133714	R4133715	R4166926	NR	-	-	-	-
-	1-1/8 "	R4133716	R4133717	R4166926	NR	-	-	-	-
-	1-1/8 "	R4133714	R4133715	R4166926	NR	-	-	-	-
-	1-1/8 "	R4133719	R4133718	R4166926	NR	N/A[358]	R4122688	-	-
-	1-1/8 "	R4133714	R4133715	R4166926	NR	N/A[358]	R4122688	-	-
-	1-1/8 "	R4133719	R4133718	R4166926	NR	N/A[358]	R4122688	-	-
-	1-1/8 "	R4133714	R4133715	R4166926	NR	N/A[358]	R4122688	-	-
-	1-1/4 "	R4133581	R4133581	R4166923	NR	-	-	-	-

MAKE MODEL YEAR AXLE CODE AXLE WEIGHT	AXLE & BRK. TYPE	BRK. MFG.	BRAKE SIZE	FMSI	MERITOR DISC PAD OR BRAKE SHOE	MERITOR GUIDE PIN OR RETURN SPRING KIT	MERITOR CALIPER HWD. KIT OR RETURN SPRING KIT	MERITOR ADJUSTER KIT (LEFT WHEEL)	MERITOR ADJUSTER KIT (RIGHT WHEEL)
FORD(Cont.)									
LN600 SERIES: LOUISVILLE 94.4 BBC SHORT CONVENTIONAL CHASSIS CAB(Cont.)									
1969									
Split System									
F090, F120	Fa	WG	15 " x 3 "	1245C - 321	R700321	R40H521	R40H9237	R40H3502	R40H3503
	Fa	WG	15 " x 3 "	1245C - 321	R700321	R40H521	R40H9237	R40H3502	R40H3503
	Fa	WG	15 " x 3 "	1245C - 321	R700321	R40H521	R40H9237	R40H3502	R40H3503
1968									
F050, F055, F060	Fa	KH	14 " x 2-1/2 "	2060 - 361	Discontinued	R40H596	R40H9219	R40H3536	R40H3537
	Fa	KH	14 " x 2-1/2 "	2060 - 361	Discontinued	R40H596	R40H9219	R40H3536	R40H3537
F070	Fd	DN		7141 - D224	MD224[340]	69310693	60050153	NR	NR
F080, F090	Fd	DN		7149 - D236	MD236[341]	69310693	R40H5523	NR	NR
	Fd	DN		7149 - D236	MD236[341]	69310693	R40H5523	NR	NR
R170, R175	Ra	KH	15 " x 5 "	4646 - 400	R700400	R40H595	R40H9220	R40H3538	R40H3539
	Ra	KH	15 " x 5 "	4646 - 400	R700400	R40H595	R40H9220	R40H3538	R40H3539
	Ra	KH	15 " x 5 "	4646 - 400	R700400	R40H595	R40H9220	R40H3538	R40H3539
	Ra	WG	15 " x 5 "	1252 - 346	R700346	R40H597	R40H9200	R40H3540	R40H3541
	Ra	WG	15 " x 5 "	1252 - 346	R700346	R40H597	R40H9200	R40H3540	R40H3541
R185	Ra	WG	15 " x 6 "	4596 - 381	R700381	R40H597	R40H9200	R40H3540	R40H3541
	Ra	WG	15 " x 6 "	4596 - 381	R700381	R40H597	R40H9200	R40H3540	R40H3541
	Ra	WG	15 " x 7 "	4597 - 383	R700383	R40H597	R40H9200	R40H3540	R40H3541
	Ra	WG	15 " x 7 "	4597 - 383	R700383	R40H597	R40H9200	R40H3540	R40H3541
Single System									
F070	Fa	WG	15 " x 3 "	1245C - 321	R700321	R40H521	R40H9237	R40H3502	R40H3503
	Fa	WG	15 " x 3 "	1245C - 321	R700321	R40H521	R40H9237	R40H3502	R40H3503
	Fa	WG	15 " x 3 "	1245C - 321	R700321	R40H521	R40H9237	R40H3502	R40H3503
	Fa	WG	15 " x 3 "	1245C - 321	R700321	R40H521	R40H9237	R40H3502	R40H3503
Split System									
F070	Fa	WG	15 " x 3 "	1245C - 321	R700321	R40H521	R40H9237	R40H3502	R40H3503
	Fa	WG	15 " x 3 "	1245C - 321	R700321	R40H521	R40H9237	R40H3502	R40H3503
	Fa	WG	15 " x 3 "	1245C - 321	R700321	R40H521	R40H9237	R40H3502	R40H3503
	Fa	WG	15 " x 3 "	1245C - 321	R700321	R40H521	R40H9237	R40H3502	R40H3503
Split System									
F090, F120	Fa	WG	15 " x 3 "	1245C - 321	R700321	R40H521	R40H9237	R40H3502	R40H3503
	Fa	WG	15 " x 3 "	1245C - 321	R700321	R40H521	R40H9237	R40H3502	R40H3503
	Fa	WG	15 " x 3 "	1245C - 321	R700321	R40H521	R40H9237	R40H3502	R40H3503
	Fa	WG	15 " x 3 "	1245C - 321	R700321	R40H521	R40H9237	R40H3502	R40H3503
LN700 SERIES: LOUISVILLE 94.4 BBC SHORT CONVENTIONAL CHASSIS CAB									
1995									
	Fd	DN		7149 - D236	MD236[341]	69310693	69310782	NR	NR
	Fd	DN		7149 - D236	MD236[341]	69310693	69310782	NR	NR
	Fd	DN		7149 - D236	MD236[341]	69310693	69310782	NR	NR
	Fd	DN		7141 - D224	MD224[340]	69310693	60050153	NR	NR
	Ra	LG	15 " x 5 "	4528A - 542	N/A	R40H618	NR	SP7888S	SP7888S
	Ra	LG	15 " x 5 "	4528A - 542	N/A	R40H618	NR	NR	NR
	Ra	LG	15 " x 6 "	4504A - 543	N/A	R40H618	NR	SP7887S	SP7887S
	Ra	LG	15 " x 6 "	4504A - 543	N/A	R40H618	NR	NR	NR
	Ra	LG	15 " x 7 "	4505A - 544	N/A	R40H618	NR	SP7887S	SP7887S
	Ra	LG	15 " x 7 "	4505A - 544	N/A	R40H618	NR	NR	NR
1994									
	Fd	DN		7149 - D236	MD236[341]	69310693	69310782	NR	NR
	Fd	DN		7149 - D236	MD236[341]	69310693	69310782	NR	NR
	Fd	DN		7149 - D236	MD236[341]	69310693	69310782	NR	NR
	Fd	DN		7141 - D224	MD224[340]	69310693	60050153	NR	NR
	Ra	LG	15 " x 5 "	4528A - 542	N/A	R40H618	NR	SP7888S	SP7888S
	Ra	LG	15 " x 5 "	4528A - 542	N/A	R40H618	NR	NR	NR
	Ra	LG	15 " x 6 "	4504A - 543	N/A	R40H618	NR	SP7887S	SP7887S
	Ra	LG	15 " x 6 "	4504A - 543	N/A	R40H618	NR	NR	NR
	Ra	LG	15 " x 7 "	4505A - 544	N/A	R40H618	NR	SP7887S	SP7887S
	Ra	LG	15 " x 7 "	4505A - 544	N/A	R40H618	NR	NR	NR
1993									
	Fd	DN		7149 - D236	MD236[341]	69310693	69310782	NR	NR
	Fd	DN		7149 - D236	MD236[341]	69310693	69310782	NR	NR
	Fd	DN		7149 - D236	MD236[341]	69310693	69310782	NR	NR
	Fd	DN		7141 - D224	MD224[340]	69310693	60050153	NR	NR
	Ra	LG	15 " x 5 "	4528A - 542	N/A	R40H618	NR	SP7888S	SP7888S

9 - 6 Stud, Dayton Rotor, Hat Style
42 - 6 Stud, Dayton Rotor, "U" Style
188 - 6 Stud, 9.251" Hub
37 - Also available as a New unit
186 - 10 Stud
204 - Right Hand; use E-4057 for Left Hand Expander Kits
41 - Aluminum piston
187 - 6 Stud, 6.443" Hub
329 - Forward

MERITOR DRUM OR ROTOR NO.	CALIPER OR CYLINDER BORE SIZE	MERITOR CALIPER OR WHEEL CYLINDER (LEFT)	MERITOR CALIPER OR WHEEL CYLINDER (RIGHT)	MERITOR CALIPER OR WHEEL CYLINDER REPAIR KIT	MERITOR CALIPER PISTON	MERITOR MASTER CYLINDER	MERITOR MASTER CYLINDER KIT	MERITOR BRAKE HOSE (LEFT)	MERITOR BRAKE HOSE (RIGHT)
									FORD(Cont.)
LN600 SERIES: LOUISVILLE 94.4 BBC SHORT CONVENTIONAL CHASSIS CAB(Cont.)									
-	1-1/4 "	R4133720	R4133721	R4166923	NR	-	-	-	-
-	1-1/4 "	R4133720	R4133721	R4166923	NR	-	-	-	-
-	1-1/4 "	R4133581	R4133582	R4166923	NR	-	-	-	-
-	1.09375	R4133484	R4133485	R4166819	NR	-	-	-	-
-	1.09375	R4133484	R4133485	R4166819	NR	-	-	-	-
23-122700-002[9]	2-1/2 "	R424244X	R424244X[37]	60050266	69270757[41]	-	-	-	-
23-122691-002[42]	2-7/8 "	60050145X	60050145X[37]	60050146	69270702[41]	-	-	-	-
23-122703-002[186]	2-7/8 "	60050145X	60050145X[37]	60050146	69270702[41]	-	-	-	-
-	1-1/2 "	R4033607	R4033607	R4166818	NR	-	-	-	-
-	1-1/2 "	R4033607	R4033607	R4166818	NR	-	-	-	-
-	1-5/8 "	R4133606	R4133606	R415193	NR	-	-	-	-
-	1-5/8 "	R4133338	R4133338	R4166689	NR	-	-	-	-
-	1-5/8 "	R4133338	R4133338	R4166689	NR	-	-	-	-
-	1-5/8 "	R4133338	R4133338	R4166689	NR	-	-	-	-
-	1-5/8 "	R4133338	R4133338	R4166689	NR	-	-	-	-
-	1-3/4 "	R4133400	R4133400	R4166917	NR	-	-	-	-
-	1-3/4 "	R4133400	R4133400	R4166917	NR	-	-	-	-
-	1-1/8 "	R4133714	R4133715	R4166926	NR	-	-	-	-
-	1-1/8 "	R4133716	R4133717	R4166926	NR	-	-	-	-
-	1-1/8 "	R4133716	R4133717	R4166926	NR	-	-	-	-
-	1-1/8 "	R4133714	R4133715	R4166926	NR	-	-	-	-
-	1-1/8 "	R4133719	R4133718	R4166926	NR	N/A[358]	R4122688	-	-
-	1-1/8 "	R4133719	R4133718	R4166926	NR	N/A[358]	R4122688	-	-
-	1-1/8 "	R4133714	R4133715	R4166926	NR	N/A[358]	R4122688	-	-
-	1-1/8 "	R4133714	R4133715	R4166926	NR	N/A[358]	R4122688	-	-
-	1-1/4 "	R4133720	R4133721	R4166923	NR	-	-	-	-
-	1-1/4 "	R4133581	R4133582	R4166923	NR	-	-	-	-
-	1-1/4 "	R4133581	R4133581	R4166923	NR	-	-	-	-
-	1-1/4 "	R4133720	R4133721	R4166923	NR	-	-	-	-
LN700 SERIES: LOUISVILLE 94.4 BBC SHORT CONVENTIONAL CHASSIS CAB									
23-122703-002[186]	2-7/8 "	60050145X	60050145X[37]	60050146	69270702[41]	-	-	R4577461	R4577461
23-122743-002[187]	2-7/8 "	60050145X	60050145X[37]	60050146	69270702[41]	-	-	R4577461	R4577461
23-122691-002[188]	2-7/8 "	60050145X	60050145X[37]	60050146	69270702[41]	-	-	R4577461	R4577461
23-122700-002[9]	2-1/2 "	R424244X	R424244X[37]	60050266	69270757[41]	-	-	R4577461	R4577461
N/A	1-5/8 "	201185	201186[329]	SP7895S	NR	-	-	R4577870	R4577870
N/A	1-5/8 "	201181	201182	SP7895S	NR	-	-	R4577870	R4577870
N/A	1-3/4 "	201183X	201184X[329]	SP7873S	NR	-	-	R4577870	R4577870
N/A	1-3/4 "	201179X	201180X	SP7873S	SP7880S[204]	-	-	R4577870	R4577870
N/A	1-3/4 "	201183X	201184X[329]	SP7873S	NR	-	-	R4577870	R4577870
N/A	1-3/4 "	201179X	201180X	SP7873S	SP7880S[204]	-	-	R4577870	R4577870
23-122703-002[186]	2-7/8 "	60050145X	60050145X[37]	60050146	69270702[41]	-	-	R4577461	R4577461
23-122743-002[187]	2-7/8 "	60050145X	60050145X[37]	60050146	69270702[41]	-	-	R4577461	R4577461
23-122691-002[188]	2-7/8 "	60050145X	60050145X[37]	60050146	69270702[41]	-	-	R4577461	R4577461
23-122700-002[9]	2-1/2 "	R424244X	R424244X[37]	60050266	69270757[41]	-	-	R4577461	R4577461
N/A	1-5/8 "	201185	201186[329]	SP7895S	NR	-	-	R4577870	R4577870
N/A	1-5/8 "	201181	201182	SP7895S	NR	-	-	R4577870	R4577870
N/A	1-3/4 "	201183X	201184X[329]	SP7873S	NR	-	-	R4577870	R4577870
N/A	1-3/4 "	201179X	201180X	SP7873S	SP7880S[204]	-	-	R4577870	R4577870
N/A	1-3/4 "	201183X	201184X[329]	SP7873S	NR	-	-	R4577870	R4577870
N/A	1-3/4 "	201179X	201180X	SP7873S	SP7880S[204]	-	-	R4577870	R4577870
23-122703-002[186]	2-7/8 "	60050145X	60050145X[37]	60050146	69270702[41]	-	-	R4577461	R4577461
23-122691-002[188]	2-7/8 "	60050145X	60050145X[37]	60050146	69270702[41]	-	-	R4577461	R4577461
23-122743-002[187]	2-7/8 "	60050145X	60050145X[37]	60050146	69270702[41]	-	-	R4577461	R4577461
23-122700-002[9]	2-1/2 "	R424244X	R424244X[37]	60050266	69270757[41]	-	-	R4577461	R4577461
N/A	1-5/8 "	201185	201186[329]	SP7895S	NR	-	-	R4577870	R4577870

340 - Use 69160457 for Disc Pad Retainer Clip

341 - Use 69160445 for Disc Pad Retainer Clip

358 - Split System

MAKE MODEL YEAR AXLE CODE AXLE WEIGHT	AXLE & BRK. TYPE	BRK. MFG.	BRAKE SIZE	FMSI	MERITOR DISC PAD OR BRAKE SHOE	MERITOR GUIDE PIN OR RETURN SPRING KIT	MERITOR CALIPER HWD. KIT OR RETURN SPRING KIT	MERITOR ADJUSTER KIT (LEFT WHEEL)	MERITOR ADJUSTER KIT (RIGHT WHEEL)
FORD(Cont.)									
LN700 SERIES: LOUISVILLE 94.4 BBC SHORT CONVENTIONAL CHASSIS CAB(Cont.)									
1993									
	Ra	LG	15 " x 5 "	4528A - 542	N/A	R40H618	NR	NR	NR
	Ra	LG	15 " x 6 "	4504A - 543	N/A	R40H618	NR	NR	NR
	Ra	LG	15 " x 6 "	4504A - 543	N/A	R40H618	NR	SP7887S	SP7887S
	Ra	LG	15 " x 7 "	4505A - 544	N/A	R40H618	NR	SP7887S	SP7887S
	Ra	LG	15 " x 7 "	4505A - 544	N/A	R40H618	NR	NR	NR
1992									
	Fd	DN		7141 - D224	MD224[340]	69310693	60050153	NR	NR
	Fd	DN		7149 - D236	MD236[341]	69310693	69310782	NR	NR
	Fd	DN		7149 - D236	MD236[341]	69310693	69310782	NR	NR
	Fd	DN		7149 - D236	MD236[341]	69310693	69310782	NR	NR
	Ra	LG	15 " x 5 "	4528A - 542	N/A	R40H618	NR	NR	NR
	Ra	LG	15 " x 5 "	4528A - 542	N/A	R40H618	NR	SP7888S	SP7888S
	Ra	LG	15 " x 6 "	4504A - 543	N/A	R40H618	NR	SP7887S	SP7887S
	Ra	LG	15 " x 6 "	4504A - 543	N/A	R40H618	NR	NR	NR
	Ra	LG	15 " x 7 "	4505A - 544	N/A	R40H618	NR	NR	NR
	Ra	LG	15 " x 7 "	4505A - 544	N/A	R40H618	NR	SP7887S	SP7887S
1991									
	Fd	DN		7149 - D236	MD236[341]	69310693	69310782	NR	NR
	Fd	DN		7149 - D236	MD236[341]	69310693	69310782	NR	NR
	Fd	DN		7141 - D224	MD224[340]	69310693	60050153	NR	NR
	Fd	DN		7149 - D236	MD236[341]	69310693	69310782	NR	NR
	Ra	LG	15 " x 5 "	4528A - 542	N/A	R40H618	NR	SP7888S	SP7888S
	Ra	LG	15 " x 5 "	4528A - 542	N/A	R40H618	NR	NR	NR
	Ra	LG	15 " x 6 "	4504A - 543	N/A	R40H618	NR	SP7887S	SP7887S
	Ra	LG	15 " x 6 "	4504A - 543	N/A	R40H618	NR	NR	NR
	Ra	LG	15 " x 7 "	4505A - 544	N/A	R40H618	NR	SP7887S	SP7887S
	Ra	LG	15 " x 7 "	4505A - 544	N/A	R40H618	NR	NR	NR
1990									
	Fd	DN		7149 - D236	MD236[341]	69310693	69310782	NR	NR
	Fd	DN		7141 - D224	MD224[340]	69310693	60050153	NR	NR
	Fd	DN		7149 - D236	MD236[341]	69310693	69310782	NR	NR
	Fd	DN		7149 - D236	MD236[341]	69310693	69310782	NR	NR
	Ra	LG	15 " x 5 "	4528A - 542	N/A	R40H618	NR	SP7888S	SP7888S
	Ra	LG	15 " x 5 "	4528A - 542	N/A	R40H618	NR	NR	NR
	Ra	LG	15 " x 6 "	4504A - 543	N/A	R40H618	NR	SP7887S	SP7887S
	Ra	LG	15 " x 6 "	4504A - 543	N/A	R40H618	NR	NR	NR
	Ra	LG	15 " x 7 "	4505A - 544	N/A	R40H618	NR	SP7887S	SP7887S
	Ra	LG	15 " x 7 "	4505A - 544	N/A	R40H618	NR	NR	NR
1989									
	Fd	DN		7141 - D224	MD224[340]	69310693	60050153	NR	NR
	Fd	DN		7149 - D236	MD236[341]	69310693	69310782[43]	NR	NR
	Fd	DN		7149 - D236	MD236[341]	69310693	69310782[43]	NR	NR
	Fd	DN		7149 - D236	MD236[341]	69310693	69310782[43]	NR	NR
	Ra	LG	15 " x 5 "	4528A - 542	N/A	R40H618	NR	SP7888S	SP7888S
	Ra	LG	15 " x 5 "	4528A - 542	N/A	R40H618	NR	NR	NR
	Ra	LG	15 " x 6 "	4504A - 543	N/A	R40H618	NR	SP7887S	SP7887S
	Ra	LG	15 " x 6 "	4504A - 543	N/A	R40H618	NR	NR	NR
	Ra	LG	15 " x 7 "	4505A - 544	N/A	R40H618	NR	NR	NR
	Ra	LG	15 " x 7 "	4505A - 544	N/A	R40H618	NR	SP7887S	SP7887S
1988									
	Fd	DN		7149 - D236	MD236[341]	69310693	69310782[43]	NR	NR
	Fd	DN		7149 - D236	MD236[341]	69310693	69310782[43]	NR	NR
	Fd	DN		7141 - D224	MD224[340]	69310693	60050153	NR	NR
	Fd	DN		7149 - D236	MD236[341]	69310693	69310782[43]	NR	NR
	Ra	LG	15 " x 5 "	4528A - 542	N/A	R40H618	NR	NR	NR
	Ra	LG	15 " x 5 "	4528A - 542	N/A	R40H618	NR	SP7888S	SP7888S
	Ra	LG	15 " x 6 "	4504A - 543	N/A	R40H618	NR	NR	NR
	Ra	LG	15 " x 6 "	4504A - 543	N/A	R40H618	NR	SP7887S	SP7887S
	Ra	LG	15 " x 7 "	4505A - 544	N/A	R40H618	NR	SP7887S	SP7887S
	Ra	LG	15 " x 7 "	4505A - 544	N/A	R40H618	NR	NR	NR
1987									
	Fd	DN		7141 - D224	MD224[340]	69310693	60050153	NR	NR
	Fd	DN		7149 - D236	MD236[341]	69310693	69310782[43]	NR	NR
	Fd	DN		7149 - D236	MD236[341]	69310693	69310782[43]	NR	NR

9 - 6 Stud, Dayton Rotor, Hat Style
43 - For Applications Taking A Longer Shim, Use R404151706
187 - 6 Stud, 6.443" Hub
37 - Also available as a New unit
53 - Power Brakes
188 - 6 Stud, 9.251" Hub
41 - Aluminum piston
186 - 10 Stud
204 - Right Hand; use E-4057 for Left Hand Expander Kits

MERITOR DRUM OR ROTOR NO.	CALIPER OR CYLINDER BORE SIZE	MERITOR CALIPER OR WHEEL CYLINDER (LEFT)	MERITOR CALIPER OR WHEEL CYLINDER (RIGHT)	MERITOR CALIPER OR WHEEL CYLINDER REPAIR KIT	MERITOR CALIPER PISTON	MERITOR MASTER CYLINDER	MERITOR MASTER CYLINDER KIT	MERITOR BRAKE HOSE (LEFT)	MERITOR BRAKE HOSE (RIGHT)
									FORD(Cont.)
LN700 SERIES: LOUISVILLE 94.4 BBC SHORT CONVENTIONAL CHASSIS CAB(Cont.)									
N/A	1-5/8 "	201181	201182	SP7895S	NR	-	-	R4577870	R4577870
N/A	1-3/4 "	201179X	201180X	SP7873S	SP7880S[204]	-	-	R4577870	R4577870
N/A	1-3/4 "	201183X	201184X[329]	SP7873S	NR	-	-	R4577870	R4577870
N/A	1-3/4 "	201183X	201184X[329]	SP7873S	NR	-	-	R4577870	R4577870
N/A	1-3/4 "	201179X	201180X	SP7873S	SP7880S[204]	-	-	R4577870	R4577870
23-122700-002[9]	2-1/2 "	R424244X	R424244X[37]	60050266	69270757[41]	-	-	R4577461	R4577461
23-122691-002[188]	2-7/8 "	60050145X	60050145X[37]	60050146	69270702[41]	-	-	R4577461	R4577461
23-122703-002[186]	2-7/8 "	60050145X	60050145X[37]	60050146	69270702[41]	-	-	R4577461	R4577461
23-122743-002[187]	2-7/8 "	60050145X	60050145X[37]	60050146	69270702[41]	-	-	R4577461	R4577461
N/A	1-5/8 "	201181	201182	SP7895S	NR	-	-	R4577870	R4577870
N/A	1-5/8 "	201185	201186[329]	SP7895S	NR	-	-	R4577870	R4577870
N/A	1-3/4 "	201183X	201184X[329]	SP7873S	NR	-	-	R4577870	R4577870
N/A	1-3/4 "	201179X	201180X	SP7873S	SP7880S[204]	-	-	R4577870	R4577870
N/A	1-3/4 "	201179X	201180X	SP7873S	SP7880S[204]	-	-	R4577870	R4577870
N/A	1-3/4 "	201183X	201184X[329]	SP7873S	NR	-	-	R4577870	R4577870
23-122703-002[186]	2-7/8 "	60050145X	60050145X[37]	60050146	69270702[41]	-	-	R4577461	R4577461
23-122743-002[187]	2-7/8 "	60050145X	60050145X[37]	60050146	69270702[41]	-	-	R4577461	R4577461
23-122700-002[9]	2-1/2 "	R424244X	R424244X[37]	60050266	69270757[41]	-	-	R4577461	R4577461
23-122691-002[188]	2-7/8 "	60050145X	60050145X[37]	60050146	69270702[41]	-	-	R4577461	R4577461
N/A	1-5/8 "	201185	201186[329]	SP7895S	NR	-	-	R4577870	R4577870
N/A	1-5/8 "	201181	201182	SP7895S	NR	-	-	R4577870	R4577870
N/A	1-3/4 "	201183X	201184X[329]	SP7873S	NR	-	-	R4577870	R4577870
N/A	1-3/4 "	201179X	201180X	SP7873S	SP7880S[204]	-	-	R4577870	R4577870
N/A	1-3/4 "	201183X	201184X[329]	SP7873S	NR	-	-	R4577870	R4577870
N/A	1-3/4 "	201179X	201180X	SP7873S	SP7880S[204]	-	-	R4577870	R4577870
23-122703-002[186]	2-7/8 "	60050145X	60050145X[37]	60050146	69270702[41]	R4111999[53]	R4122386	R4577461	R4577461
23-122700-002[9]	2-1/2 "	R424244X	R424244X[37]	60050266	69270757[41]	R4111999[53]	R4122386	R4577461	R4577461
23-122691-002[188]	2-7/8 "	60050145X	60050145X[37]	60050146	69270702[41]	R4111999[53]	R4122386	R4577461	R4577461
23-122743-002[187]	2-7/8 "	60050145X	60050145X[37]	60050146	69270702[41]	R4111999[53]	R4122386	R4577461	R4577461
N/A	1-5/8 "	201185	201186[329]	SP7895S	NR	-	-	R4577870	R4577870
N/A	1-5/8 "	201181	201182	SP7895S	NR	-	-	R4577870	R4577870
N/A	1-3/4 "	201183X	201184X[329]	SP7873S	NR	-	-	R4577870	R4577870
N/A	1-3/4 "	201179X	201180X	SP7873S	SP7880S[204]	-	-	R4577870	R4577870
N/A	1-3/4 "	201183X	201184X[329]	SP7873S	NR	-	-	R4577870	R4577870
N/A	1-3/4 "	201179X	201180X	SP7873S	SP7880S[204]	-	-	R4577870	R4577870
23-122700-002[9]	2-1/2 "	R424244X	R424244X[37]	60050266	69270757[41]	R4111999[53]	R4122386	R4577461	R4577461
23-122691-002[188]	2-7/8 "	60050145X	60050145X[37]	60050146	69270702[41]	R4111999[53]	R4122386	R4577461	R4577461
23-122703-002[186]	2-7/8 "	60050145X	60050145X[37]	60050146	69270702[41]	R4111999[53]	R4122386	R4577461	R4577461
23-122743-002[187]	2-7/8 "	60050145X	60050145X[37]	60050146	69270702[41]	R4111999[53]	R4122386	R4577461	R4577461
N/A	1-5/8 "	201185	201186[329]	SP7895S	NR	-	-	N/A	N/A
N/A	1-5/8 "	201181	201182	SP7895S	NR	-	-	N/A	N/A
N/A	1-3/4 "	201183X	201184X[329]	SP7873S	NR	-	-	N/A	N/A
N/A	1-3/4 "	201179X	201180X	SP7873S	SP7880S[204]	-	-	N/A	N/A
N/A	1-3/4 "	201179X	201180X	SP7873S	SP7880S[204]	-	-	N/A	N/A
N/A	1-3/4 "	201183X	201184X[329]	SP7873S	NR	-	-	N/A	N/A
23-122743-002[187]	2-7/8 "	60050145X	60050145X[37]	60050146	69270702[41]	R4111999[53]	R4122386	R4577461	R4577461
23-122703-002[186]	2-7/8 "	60050145X	60050145X[37]	60050146	69270702[41]	R4111999[53]	R4122386	R4577461	R4577461
23-122700-002[9]	2-1/2 "	R424244X	R424244X[37]	60050266	69270757[41]	R4111999[53]	R4122386	R4577461	R4577461
23-122691-002[188]	2-7/8 "	60050145X	60050145X[37]	60050146	69270702[41]	R4111999[53]	R4122386	R4577461	R4577461
N/A	1-5/8 "	201181	201182	SP7895S	NR	-	-	N/A	N/A
N/A	1-5/8 "	201185	201186[329]	SP7895S	NR	-	-	N/A	N/A
N/A	1-3/4 "	201179X	201180X	SP7873S	SP7880S[204]	-	-	N/A	N/A
N/A	1-3/4 "	201183X	201184X[329]	SP7873S	NR	-	-	N/A	N/A
N/A	1-3/4 "	201183X	201184X[329]	SP7873S	NR	-	-	N/A	N/A
N/A	1-3/4 "	201179X	201180X	SP7873S	SP7880S[204]	-	-	N/A	N/A
23-122700-002[9]	2-1/2 "	R424244X	R424244X[37]	60050266	69270757[41]	R4111999[53]	R4122386	R4577461	R4577461
23-122691-002[188]	2-7/8 "	60050145X	60050145X[37]	60050146	69270702[41]	R4111999[53]	R4122386	R4577461	R4577461
23-122703-002[186]	2-7/8 "	60050145X	60050145X[37]	60050146	69270702[41]	R4111999[53]	R4122386	R4577461	R4577461

329 - Forward

340 - Use 69160457 for Disc Pad Retainer Clip

341 - Use 69160445 for Disc Pad Retainer Clip

MAKE MODEL YEAR AXLE CODE AXLE WEIGHT	AXLE & BRK. TYPE	BRK. MFG.	BRAKE SIZE	FMSI	MERITOR DISC PAD OR BRAKE SHOE	MERITOR GUIDE PIN OR RETURN SPRING KIT	MERITOR CALIPER HWD. KIT OR RETURN SPRING KIT	MERITOR ADJUSTER KIT (LEFT WHEEL)	MERITOR ADJUSTER KIT (RIGHT WHEEL)
FORD(Cont.)									
LN700 SERIES: LOUISVILLE 94.4 BBC SHORT CONVENTIONAL CHASSIS CAB(Cont.)									
1987									
	Fd	DN		7149 - D236	MD236[341]	69310693	69310782[43]	NR	NR
	Ra	LG	15 " x 5 "	4528A - 542	N/A	R40H618	NR	SP7888S	SP7888S
	Ra	LG	15 " x 5 "	4528A - 542	N/A	R40H618	NR	NR	NR
	Ra	LG	15 " x 6 "	4504A - 543	N/A	R40H618	NR	SP7887S	SP7887S
	Ra	LG	15 " x 6 "	4504A - 543	N/A	R40H618	NR	NR	NR
	Ra	LG	15 " x 7 "	4505A - 544	N/A	R40H618	NR	NR	NR
	Ra	LG	15 " x 7 "	4505A - 544	N/A	R40H618	NR	SP7887S	SP7887S
1986									
	Fd	DN		7149 - D236	MD236[341]	69310693	69310782	NR	NR
	Fd	DN		7149 - D236	MD236[341]	69310693	69310782	NR	NR
	Fd	DN		7149 - D236	MD236[341]	69310693	69310782	NR	NR
	Fd	DN		7141 - D224	MD224[340]	69310693	60050153	NR	NR
	Ra	LG	15 " x 5 "	4528A - 542	N/A	R40H618	NR	NR	NR
	Ra	LG	15 " x 5 "	4528A - 542	N/A	R40H618	NR	SP7888S	SP7888S
	Ra	LG	15 " x 6 "	4504A - 543	N/A	R40H618	NR	NR	NR
	Ra	LG	15 " x 6 "	4504A - 543	N/A	R40H618	NR	SP7887S	SP7887S
	Ra	LG	15 " x 6 "	4504A - 543	N/A	R40H618	NR	SP7887S	SP7887S
	Ra	LG	15 " x 6 "	4504A - 543	N/A	R40H618	NR	NR	NR
	Ra	LG	15 " x 7 "	4505A - 544	N/A	R40H618	NR	SP7887S	SP7887S
	Ra	LG	15 " x 7 "	4505A - 544	N/A	R40H618	NR	NR	NR
	Ra	LG	15 " x 7 "	4505A - 544	N/A	R40H618	NR	NR	NR
	Ra	LG	15 " x 7 "	4505A - 544	N/A	R40H618	NR	SP7887S	SP7887S
F050, F055, F060	Fa	KH	14 " x 2-1/2 "	2060 - 361	Discontinued	R40H596	R40H9219	R40H3536	R40H3537
F070	Fa	WG	15 " x 3 "	1245C - 321	R700321	R40H521	R40H9237	R40H3502	R40H3503
	Fa	WG	15 " x 3 "	1245C - 321	R700321	R40H521	R40H9237	R40H3502	R40H3503
	Fd	DN		7141 - D224	MD224[340]	69310693	60050153	NR	NR
F080, F090	Fd	DN		7149 - D236	MD236[341]	69310693	69310782	NR	NR
	Fd	DN		7149 - D236	MD236[341]	69310693	69310782	NR	NR
R170, R175	Ra	KH	15 " x 5 "	4646 - 400	R700400	R40H595	R40H9220	R40H3538	R40H3539
	Ra	WG	15 " x 5 "	1252 - 346	R700346	R40H597	R40H9200	R40H3540	R40H3541
R185	Ra	WG	15 " x 6 "	4596 - 381	R700381	R40H597	R40H9200	R40H3540	R40H3541
	Ra	WG	15 " x 7 "	4597 - 383	R700383	R40H597	R40H9200	R40H3540	R40H3541
Split System					R700321	R40H521	R40H9237	R40H3502	R40H3503
					R700321	R40H521	R40H9237	R40H3502	R40H3503
Split System									
F090, F120	Fa	WG	15 " x 3 "	1245C - 321	R700321	R40H521	R40H9237	R40H3502	R40H3503
	Fa	WG	15 " x 3 "	1245C - 321	R700321	R40H521	R40H9237	R40H3502	R40H3503
1985									
	Fd	DN		7149 - D236	MD236[341]	69310693	R40H5523	NR	NR
	Fd	DN		7149 - D236	MD236[341]	69310693	R40H5523	NR	NR
	Fd	DN		7149 - D236	MD236[341]	69310693	R40H5523	NR	NR
	Fd	DN		7141 - D224	MD224[340]	69310693	60050153	NR	NR
	Ra	LG	15 " x 5 "	4528A - 542	N/A	R40H618	NR	NR	NR
	Ra	LG	15 " x 5 "	4528A - 542	N/A	R40H618	NR	SP7888S	SP7888S
	Ra	LG	15 " x 6 "	4504A - 543	N/A	R40H618	NR	NR	NR
	Ra	LG	15 " x 6 "	4504A - 543	N/A	R40H618	NR	SP7887S	SP7887S
	Ra	LG	15 " x 6 "	4504A - 543	N/A	R40H618	NR	NR	NR
	Ra	LG	15 " x 6 "	4504A - 543	N/A	R40H618	NR	SP7888S	SP7888S
	Ra	LG	15 " x 7 "	4505A - 544	N/A	R40H618	NR	NR	NR
	Ra	LG	15 " x 7 "	4505A - 544	N/A	R40H618	NR	SP7887S	SP7887S
	Ra	LG	15 " x 7 "	4505A - 544	N/A	R40H618	NR	NR	NR
	Ra	LG	15 " x 7 "	4505A - 544	N/A	R40H618	NR	SP7888S	SP7888S
F050, F055, F060	Fa	KH	14 " x 2-1/2 "	2060 - 361	Discontinued	R40H596	R40H9219	R40H3536	R40H3537
F070	Fa	WG	15 " x 3 "	1245C - 321	R700321	R40H521	R40H9237	R40H3502	R40H3503
	Fa	WG	15 " x 3 "	1245C - 321	R700321	R40H521	R40H9237	R40H3502	R40H3503
	Fd	DN		7141 - D224	MD224[340]	69310693	60050153	NR	NR
F080, F090	Fd	DN		7149 - D236	MD236[341]	69310693	R40H5523	NR	NR
	Fd	DN		7149 - D236	MD236[341]	69310693	R40H5523	NR	NR
R170, R175	Ra	KH	15 " x 5 "	4646 - 400	R700400	R40H595	R40H9220	R40H3538	R40H3539
	Ra	WG	15 " x 5 "	1252 - 346	R700346	R40H597	R40H9200	R40H3540	R40H3541
R185	Ra	WG	15 " x 6 "	4596 - 381	R700381	R40H597	R40H9200	R40H3540	R40H3541
	Ra	WG	15 " x 7 "	4597 - 383	R700383	R40H597	R40H9200	R40H3540	R40H3541
Split System					R700321	R40H521	R40H9237	R40H3502	R40H3503

9 - 6 Stud, Dayton Rotor, Hat Style
37 - Also available as a New unit
41 - Aluminum piston
43 - For Applications Taking A Longer Shim, Use E-9870
53 - Power Brakes
186 - 10 Stud
187 - 6 Stud, 6.443" Hub
188 - 6 Stud, 9.251" Hub
204 - Right Hand; use E-4057 for Left Hand Expander Kits

MERITOR DRUM OR ROTOR NO.	CALIPER OR CYLINDER BORE SIZE	MERITOR CALIPER OR WHEEL CYLINDER (LEFT)	MERITOR CALIPER OR WHEEL CYLINDER (RIGHT)	MERITOR CALIPER OR WHEEL CYLINDER REPAIR KIT	MERITOR CALIPER PISTON	MERITOR MASTER CYLINDER	MERITOR MASTER CYLINDER KIT	MERITOR BRAKE HOSE (LEFT)	MERITOR BRAKE HOSE (RIGHT)
									FORD(Cont.)
LN700 SERIES: LOUISVILLE 94.4 BBC SHORT CONVENTIONAL CHASSIS CAB(Cont.)									
23-122743-002[187]	2-7/8 "	60050145X	60050145X[37]	60050146	69270702[41]	R4111999[53]	R4122386	R4577461	R4577461
N/A	1-5/8 "	201185	201186[329]	SP7895S	NR	-	-	N/A	N/A
N/A	1-5/8 "	201181	201182	SP7895S	NR	-	-	N/A	N/A
N/A	1-3/4 "	201183X	201184X[329]	SP7873S	NR	-	-	N/A	N/A
N/A	1-3/4 "	201179X	201180X	SP7873S	SP7880S[204]	-	-	N/A	N/A
N/A	1-3/4 "	201179X	201180X	SP7873S	SP7880S[204]	-	-	N/A	N/A
N/A	1-3/4 "	201183X	201184X[329]	SP7873S	NR	-	-	N/A	N/A
23-122691-002[188]	2-7/8 "	60050145X	60050145X[37]	60050146	69270702[41]	R4111999[53]	R4122386	R4577461	R4577461
23-122743-002[187]	2-7/8 "	60050145X	60050145X[37]	60050146	69270702[41]	R4111999[53]	R4122386	R4577461	R4577461
23-122703-002[186]	2-7/8 "	60050145X	60050145X[37]	60050146	69270702[41]	R4111999[53]	R4122386	R4577461	R4577461
23-122700-002[9]	2-1/2 "	R424244X	R424244X[37]	60050266	69270757[41]	R4111999[53]	R4122386	R4577461	R4577461
N/A	1-5/8 "	201181	201182	SP7895S	NR	-	-	N/A	N/A
N/A	1-5/8 "	201185	201186[329]	SP7895S	NR	-	-	N/A	N/A
N/A	1-3/4 "	201179X	201180X	SP7873S	SP7880S[204]	-	-	N/A	N/A
N/A	1-3/4 "	201183X	201184X[329]	SP7873S	NR	-	-	N/A	N/A
N/A	1-3/4 "	201183X	201184X[329]	SP7873S	NR	-	-	N/A	N/A
N/A	1-3/4 "	201179X	201180X	SP7873S	SP7880S[204]	-	-	N/A	N/A
N/A	1-3/4 "	201183X	201184X[329]	SP7873S	NR	-	-	N/A	N/A
N/A	1-3/4 "	201179X	201180X	SP7873S	SP7880S[204]	-	-	N/A	N/A
N/A	1-3/4 "	201179X	201180X	SP7873S	SP7880S[204]	-	-	N/A	N/A
N/A	1-3/4 "	201183X	201184X[329]	SP7873S	NR	-	-	N/A	N/A
N/A	1.09375	R4133484	R4133485	R4166819	NR	-	-	-	-
N/A	1-1/8 "	R4133714	R4133715	R4166926	NR	-	-	-	-
N/A	1-1/8 "	R4133716	R4133717	R4166926	NR	-	-	-	-
23-122700-002[9]	2-1/2 "	R424244X	R424244X[37]	60050266	69270757[41]	R4111999[53]	R4122386	R4577461	R4577461
23-122703-002[186]	2-7/8 "	60050145X	60050145X[37]	60050146	69270702[41]	R4111999[53]	R4122386	R4577461	R4577461
23-122691-002[188]	2-7/8 "	60050145X	60050145X[37]	60050146	69270702[41]	R4111999[53]	R4122386	R4577461	R4577461
N/A	1-1/2 "	R4033607	R4033607	R4166818	NR	-	-	-	-
N/A	1-5/8 "	R4133338	R4133338	R4166689	NR	-	-	-	-
N/A	1-5/8 "	R4133338	R4133338	R4166689	NR	-	-	-	-
N/A	1-3/4 "	R4133400	R4133400	R4166917	NR	-	-	-	-
N/A		R4133714	R4133715	R4166926	NR	N/A[358]	R4122688	-	-
N/A		R4133719	R4133718	R4166926	NR	N/A[358]	R4122688	-	-
N/A	1-1/4 "	R4133581	R4133581	R4166923	NR	-	-	-	-
N/A	1-1/4 "	R4133720	R4133721	R4166923	NR	-	-	-	-
23-122691-002[188]	2-7/8 "	60050145X	60050145X[37]	60050146	69270702[41]	R4111999[53]	R4122386	R4577461	R4577461
23-122703-002[186]	2-7/8 "	60050145X	60050145X[37]	60050146	69270702[41]	R4111999[53]	R4122386	R4577461	R4577461
23-122743-002[187]	2-7/8 "	60050145X	60050145X[37]	60050146	69270702[41]	R4111999[53]	R4122386	R4577461	R4577461
23-122700-002[9]	2-1/2 "	R424244X	R424244X[37]	60050266	69270757[41]	R4111999[53]	R4122386	R4577461	R4577461
N/A	1-5/8 "	201181	201182	SP7895S	NR	-	-	N/A	N/A
N/A	1-5/8 "	201185	201186[329]	SP7895S	NR	-	-	N/A	N/A
N/A	1-5/8 "	201181	201182	SP7895S	NR	-	-	N/A	N/A
N/A	1-3/4 "	201183X	201184X[329]	SP7873S	NR	-	-	N/A	N/A
N/A	1-3/4 "	201179X	201180X	SP7873S	SP7880S[204]	-	-	N/A	N/A
N/A	1-5/8 "	201185	201186[329]	SP7895S	NR	-	-	N/A	N/A
N/A	1-5/8 "	201181	201182	SP7895S	NR	-	-	N/A	N/A
N/A	1-3/4 "	201183X	201184X[329]	SP7873S	NR	-	-	N/A	N/A
N/A	1-3/4 "	201179X	201180X	SP7873S	SP7880S[204]	-	-	N/A	N/A
N/A	1-5/8 "	201185	201186[329]	SP7895S	NR	-	-	N/A	N/A
N/A	1.09375	R4133484	R4133485	R4166819	NR	-	-	-	-
N/A	1-1/8 "	R4133716	R4133717	R4166926	NR	-	-	-	-
N/A	1-1/8 "	R4133714	R4133715	R4166926	NR	-	-	-	-
23-122700-002[9]	2-1/2 "	R424244X	R424244X[37]	60050266	69270757[41]	R4111999[53]	R4122386	R4577461	R4577461
23-122691-002[188]	2-7/8 "	60050145X	60050145X[37]	60050146	69270702[41]	R4111999[53]	R4122386	R4577461	R4577461
23-122703-002[186]	2-7/8 "	60050145X	60050145X[37]	60050146	69270702[41]	R4111999[53]	R4122386	R4577461	R4577461
N/A	1-1/2 "	R4033607	R4033607	R4166818	NR	-	-	-	-
N/A	1-5/8 "	R4133338	R4133338	R4166689	NR	-	-	-	-
N/A	1-5/8 "	R4133338	R4133338	R4166689	NR	-	-	-	-
N/A	1-3/4 "	R4133400	R4133400	R4166917	NR	-	-	-	-
N/A		R4133719	R4133718	R4166926	NR	N/A[358]	R4122688	-	-

329 - Forward
340 - Use 69160457 for Disc Pad Retainer Clip
341 - Use 69160445 for Disc Pad Retainer Clip
358 - Split System

MAKE MODEL YEAR AXLE CODE AXLE WEIGHT	AXLE & BRK. TYPE	BRK. MFG.	BRAKE SIZE	FMSI	MERITOR DISC PAD OR BRAKE SHOE	MERITOR GUIDE PIN OR RETURN SPRING KIT	MERITOR CALIPER HWD. KIT OR RETURN SPRING KIT	MERITOR ADJUSTER KIT (LEFT WHEEL)	MERITOR ADJUSTER KIT (RIGHT WHEEL)
FORD(Cont.)									
LN700 SERIES: LOUISVILLE 94.4 BBC SHORT CONVENTIONAL CHASSIS CAB(Cont.)									
1985					R700321	R40H521	R40H9237	R40H3502	R40H3503
Split System F090, F120	Fa	WG	15 " x 3 "	1245C - 321	R700321	R40H521	R40H9237	R40H3502	R40H3503
	Fa	WG	15 " x 3 "	1245C - 321	R700321	R40H521	R40H9237	R40H3502	R40H3503
1984									
	Fd	DN		7141 - D224	MD224[340]	69310693	60050153	NR	NR
	Fd	DN		7149 - D236	MD236[341]	69310693	R40H5523	NR	NR
	Fd	DN		7149 - D236	MD236[341]	69310693	R40H5523	NR	NR
	Fd	DN		7149 - D236	MD236[341]	69310693	R40H5523	NR	NR
	Ra	LG	15 " x 5 "	4528A - 542	N/A	R40H618	NR	NR	NR
	Ra	LG	15 " x 5 "	4528A - 542	N/A	R40H618	NR	SP7888S	SP7888S
	Ra	LG	15 " x 6 "	4504A - 543	N/A	R40H618	NR	SP7887S	SP7887S
	Ra	LG	15 " x 6 "	4504A - 543	N/A	R40H618	NR	NR	NR
	Ra	LG	15 " x 6 "	4504A - 543	N/A	R40H618	NR	NR	NR
	Ra	LG	15 " x 6 "	4504A - 543	N/A	R40H618	NR	SP7888S	SP7888S
	Ra	LG	15 " x 7 "	4505A - 544	N/A	R40H618	NR	NR	NR
	Ra	LG	15 " x 7 "	4505A - 544	N/A	R40H618	NR	SP7888S	SP7888S
	Ra	LG	15 " x 7 "	4505A - 544	N/A	R40H618	NR	NR	NR
	Ra	LG	15 " x 7 "	4505A - 544	N/A	R40H618	NR	SP7887S	SP7887S
F050, F055, F060	Fa	KH	14 " x 2-1/2 "	2060 - 361	Discontinued	R40H596	R40H9219	R40H3536	R40H3537
F070	Fa	WG	15 " x 3 "	1245C - 321	R700321	R40H521	R40H9237	R40H3502	R40H3503
	Fa	WG	15 " x 3 "	1245C - 321	R700321	R40H521	R40H9237	R40H3502	R40H3503
	Fd	DN		7141 - D224	MD224[340]	69310693	60050153	NR	NR
F080, F090	Fd	DN		7149 - D236	MD236[341]	69310693	R40H5523	NR	NR
	Fd	DN		7149 - D236	MD236[341]	69310693	R40H5523	NR	NR
R170, R175	Ra	KH	15 " x 5 "	4646 - 400	R700400	R40H595	R40H9220	R40H3538	R40H3539
	Ra	WG	15 " x 5 "	1252 - 346	R700346	R40H597	R40H9200	R40H3540	R40H3541
R185	Ra	WG	15 " x 6 "	4596 - 381	R700381	R40H597	R40H9200	R40H3540	R40H3541
	Ra	WG	15 " x 7 "	4597 - 383	R700383	R40H597	R40H9200	R40H3540	R40H3541
Split System					R700321	R40H521	R40H9237	R40H3502	R40H3503
					R700321	R40H521	R40H9237	R40H3502	R40H3503
Split System F090, F120	Fa	WG	15 " x 3 "	1245C - 321	R700321	R40H521	R40H9237	R40H3502	R40H3503
	Fa	WG	15 " x 3 "	1245C - 321	R700321	R40H521	R40H9237	R40H3502	R40H3503
1983									
	Ra	LG	15 " x 6 "	4504A - 543	N/A	R40H618	NR	SP7888S	SP7888S
	Ra	LG	15 " x 6 "	4504A - 543	N/A	R40H618	NR	NR	NR
	Ra	LG	15 " x 7 "	4505A - 544	N/A	R40H618	NR	SP7888S	SP7888S
	Ra	LG	15 " x 7 "	4505A - 544	N/A	R40H618	NR	NR	NR
F050, F055, F060	Fa	KH	14 " x 2-1/2 "	2060 - 361	Discontinued	R40H596	R40H9219	R40H3536	R40H3537
F070	Fa	WG	15 " x 3 "	1245C - 321	R700321	R40H521	R40H9237	R40H3502	R40H3503
	Fa	WG	15 " x 3 "	1245C - 321	R700321	R40H521	R40H9237	R40H3502	R40H3503
	Fa	WG	15 " x 3 "	1245C - 321	R700321	R40H521	R40H9237	R40H3502	R40H3503
	Fa	WG	15 " x 3 "	1245C - 321	R700321	R40H521	R40H9237	R40H3502	R40H3503
	Fd	DN		7141 - D224	MD224[340]	69310693	60050153	NR	NR
F080, F090	Fd	DN		7149 - D236	MD236[341]	69310693	R40H5523	NR	NR
	Fd	DN		7149 - D236	MD236[341]	69310693	R40H5523	NR	NR
F090, F120	Fa	WG	15 " x 3 "	1245C - 321	R700321	R40H521	R40H9237	R40H3502	R40H3503
	Fa	WG	15 " x 3 "	1245C - 321	R700321	R40H521	R40H9237	R40H3502	R40H3503
R170, R175	Ra	KH	15 " x 5 "	4646 - 400	R700400	R40H595	R40H9220	R40H3538	R40H3539
	Ra	WG	15 " x 5 "	1252 - 346	R700346	R40H597	R40H9200	R40H3540	R40H3541
R185	Ra	WG	15 " x 6 "	4596 - 381	R700381	R40H597	R40H9200	R40H3540	R40H3541
	Ra	WG	15 " x 7 "	4597 - 383	R700383	R40H597	R40H9200	R40H3540	R40H3541
1982									
	Ra	LG	15 " x 6 "	4504A - 543	N/A	R40H618	NR	SP7888S	SP7888S
	Ra	LG	15 " x 6 "	4504A - 543	N/A	R40H618	NR	NR	NR
	Ra	LG	15 " x 7 "	4505A - 544	N/A	R40H618	NR	SP7888S	SP7888S
	Ra	LG	15 " x 7 "	4505A - 544	N/A	R40H618	NR	NR	NR
F050, F055, F060	Fa	KH	14 " x 2-1/2 "	2060 - 361	Discontinued	R40H596	R40H9219	R40H3536	R40H3537
F070	Fa	WG	15 " x 3 "	1245C - 321	R700321	R40H521	R40H9237	R40H3502	R40H3503
	Fa	WG	15 " x 3 "	1245C - 321	R700321	R40H521	R40H9237	R40H3502	R40H3503
	Fa	WG	15 " x 3 "	1245C - 321	R700321	R40H521	R40H9237	R40H3502	R40H3503
	Fa	WG	15 " x 3 "	1245C - 321	R700321	R40H521	R40H9237	R40H3502	R40H3503

9 - 6 Stud, Dayton Rotor, Hat Style
53 - Power Brakes
188 - 6 Stud, 9.251" Hub

37 - Also available as a New unit
186 - 10 Stud
204 - Right Hand; use E-4057 for Left Hand Expander Kits

41 - Aluminum piston
187 - 6 Stud, 6.443" Hub
214 - Power Brakes, Split System

MERITOR DRUM OR ROTOR NO.	CALIPER OR CYLINDER BORE SIZE	MERITOR CALIPER OR WHEEL CYLINDER (LEFT)	MERITOR CALIPER OR WHEEL CYLINDER (RIGHT)	MERITOR CALIPER OR WHEEL CYLINDER REPAIR KIT	MERITOR CALIPER PISTON	MERITOR MASTER CYLINDER	MERITOR MASTER CYLINDER KIT	MERITOR BRAKE HOSE (LEFT)	MERITOR BRAKE HOSE (RIGHT)
									FORD(Cont.)
LN700 SERIES: LOUISVILLE 94.4 BBC SHORT CONVENTIONAL CHASSIS CAB(Cont.)									
N/A		R4133714	R4133715	R4166926	NR	N/A[358]	R4122688	-	-
N/A	1-1/4 "	R4133581	R4133581	R4166923	NR	-	-	-	-
N/A	1-1/4 "	R4133720	R4133721	R4166923	NR	-	-	-	-
23-122700-002[9]	2-1/2 "	R424244X	R424244X[37]	60050266	69270757[41]	R4111999[53]	R4122386	R4577461	R4577461
23-122691-002[188]	2-7/8 "	60050145X	60050145X[37]	60050146	69270702[41]	R4111999[53]	R4122386	R4577461	R4577461
23-122703-002[186]	2-7/8 "	60050145X	60050145X[37]	60050146	69270702[41]	R4111999[53]	R4122386	R4577461	R4577461
23-122743-002[187]	2-7/8 "	60050145X	60050145X[37]	60050146	69270702[41]	R4111999[53]	R4122386	R4577461	R4577461
N/A	1-5/8 "	201181	201182	SP7895S	NR	-	-	N/A	N/A
N/A	1-5/8 "	201185	201186[329]	SP7895S	NR	-	-	N/A	N/A
N/A	1-3/4 "	201183X	201184X[329]	SP7873S	NR	-	-	N/A	N/A
N/A	1-3/4 "	201179X	201180X	SP7873S	SP7880S[204]	-	-	N/A	N/A
N/A	1-5/8 "	201181	201182	SP7895S	NR	-	-	N/A	N/A
N/A	1-5/8 "	201185	201186[329]	SP7895S	NR	-	-	N/A	N/A
N/A	1-5/8 "	201181	201182	SP7895S	NR	-	-	N/A	N/A
N/A	1-5/8 "	201185	201186[329]	SP7895S	NR	-	-	N/A	N/A
N/A	1-3/4 "	201179X	201180X	SP7873S	SP7880S[204]	-	-	N/A	N/A
N/A	1-3/4 "	201183X	201184X[329]	SP7873S	NR	-	-	N/A	N/A
N/A	1.09375	R4133484	R4133485	R4166819	NR	-	-	-	-
N/A	1-1/8 "	R4133714	R4133715	R4166926	NR	-	-	-	-
N/A	1-1/8 "	R4133716	R4133717	R4166926	NR	-	-	-	-
23-122700-002[9]	2-1/2 "	R424244X	R424244X[37]	60050266	69270757[41]	R4111999[53]	R4122386	R4577461	R4577461
23-122703-002[186]	2-7/8 "	60050145X	60050145X[37]	60050146	69270702[41]	R4111999[53]	R4122386	R4577461	R4577461
23-122691-002[188]	2-7/8 "	60050145X	60050145X[37]	60050146	69270702[41]	R4111999[53]	R4122386	R4577461	R4577461
N/A	1-1/2 "	R4033607	R4033607	R4166818	NR	-	-	-	-
N/A	1-5/8 "	R4133338	R4133338	R4166689	NR	-	-	-	-
N/A	1-5/8 "	R4133338	R4133338	R4166689	NR	-	-	-	-
N/A	1-3/4 "	R4133400	R4133400	R4166917	NR	-	-	-	-
N/A		R4133719	R4133718	R4166926	NR	N/A[358]	R4122688	-	-
N/A		R4133714	R4133715	R4166926	NR	N/A[358]	R4122688	-	-
N/A	1-1/4 "	R4133720	R4133721	R4166923	NR	-	-	-	-
N/A	1-1/4 "	R4133581	R4133581	R4166923	NR	-	-	-	-
N/A	1-5/8 "	201185	201186[329]	SP7895S	NR	-	-	R4577147	R4577147
N/A	1-5/8 "	201181	201182	SP7895S	NR	-	-	R4577147	R4577147
N/A	1-5/8 "	201185	201186[329]	SP7895S	NR	-	-	R4577147	R4577147
N/A	1-5/8 "	201181	201182	SP7895S	NR	-	-	R4577147	R4577147
N/A	1.09375	R4133484	R4133485	R4166819	NR	R4111629[53]	R4122484	R4577460	R4577460
N/A	1-1/8 "	R4133714	R4133715	R4166926	NR	R4111911[219]	R4122387	R4577454	R4577455
N/A	1-1/8 "	R4133714	R4133715	R4166926	NR	R4111992[214]	R4122386	R4577452	R4577453
N/A	1-1/8 "	R4133719	R4133718	R4166926	NR	R4111992[214]	R4122386	R4577452	R4577453
N/A	1-1/8 "	R4133716	R4133717	R4166926	NR	R4111911[219]	R4122387	R4577454	R4577455
23-122700-002[9]	2-1/2 "	R424244X	R424244X[37]	60050266	69270757[41]	R4111992[214]	R4122386	R4577452	R4577453
23-122691-002[188]	2-7/8 "	60050145X	60050145X[37]	60050146	69270702[41]	R4111992[214]	R4122386	R4577452	R4577453
23-122703-002[186]	2-7/8 "	60050145X	60050145X[37]	60050146	69270702[41]	R4111992[214]	R4122386	R4577452	R4577453
N/A	1-1/4 "	R4133581	R4133581	R4166923	NR	R4111992[214]	R4122386	R4577452	R4577453
N/A	1-1/4 "	R4133720	R4133721	R4166923	NR	R4111992[214]	R4122386	R4577452	R4577453
N/A	1-1/2 "	R4033607	R4033607	R4166818	NR	-	-	R4577147	R4577147
N/A	1-5/8 "	R4133338	R4133338	R4166689	NR	-	-	R4577147	R4577147
N/A	1-5/8 "	R4133338	R4133338	R4166689	NR	-	-	R4577147	R4577147
N/A	1-3/4 "	R4133400	R4133400	R4166917	NR	-	-	R4577147	R4577147
N/A	1-5/8 "	201185	201186[329]	SP7895S	NR	-	-	R4577147	R4577147
N/A	1-5/8 "	201181	201182	SP7895S	NR	-	-	R4577147	R4577147
N/A	1-5/8 "	201185	201186[329]	SP7895S	NR	-	-	R4577147	R4577147
N/A	1-5/8 "	201181	201182	SP7895S	NR	-	-	R4577147	R4577147
N/A	1.09375	R4133484	R4133485	R4166819	NR	R4111629[53]	R4122484	R4577460	R4577460
N/A	1-1/8 "	R4133719	R4133718	R4166926	NR	R4111992[214]	R4122386	R4577452	R4577453
N/A	1-1/8 "	R4133714	R4133715	R4166926	NR	R4111992[214]	R4122386	R4577452	R4577453
N/A	1-1/8 "	R4133716	R4133717	R4166926	NR	R4111911[219]	R4122387	R4577454	R4577455
N/A	1-1/8 "	R4133714	R4133715	R4166926	NR	R4111911[219]	R4122387	R4577454	R4577455

219 - Power Brakes, Gasoline Engine with Vacuum Booster
329 - Forward
340 - Use 69160457 for Disc Pad Retainer Clip
341 - Use 69160445 for Disc Pad Retainer Clip
358 - Split System

MAKE MODEL YEAR AXLE CODE AXLE WEIGHT	AXLE & BRK. TYPE	BRK. MFG.	BRAKE SIZE	FMSI	MERITOR DISC PAD OR BRAKE SHOE	MERITOR GUIDE PIN OR RETURN SPRING KIT	MERITOR CALIPER HWD. KIT OR RETURN SPRING KIT	MERITOR ADJUSTER KIT (LEFT WHEEL)	MERITOR ADJUSTER KIT (RIGHT WHEEL)
FORD(Cont.)									
LN700 SERIES: LOUISVILLE 94.4 BBC SHORT CONVENTIONAL CHASSIS CAB(Cont.)									
1982									
	Fd	DN		7141 - D224	MD224[340]	69310693	60050153	NR	NR
F080, F090	Fd	DN		7149 - D236	MD236[341]	69310693	R40H5523	NR	NR
	Fd	DN		7149 - D236	MD236[341]	69310693	R40H5523	NR	NR
F090, F120	Fa	WG	15 " x 3 "	1245C - 321	R700321	R40H521	R40H9237	R40H3502	R40H3503
	Fa	WG	15 " x 3 "	1245C - 321	R700321	R40H521	R40H9237	R40H3502	R40H3503
R170, R175	Ra	KH	15 " x 5 "	4646 - 400	R700400	R40H595	R40H9220	R40H3538	R40H3539
	Ra	WG	15 " x 5 "	1252 - 346	R700346	R40H597	R40H9200	R40H3540	R40H3541
R185	Ra	WG	15 " x 6 "	4596 - 381	R700381	R40H597	R40H9200	R40H3540	R40H3541
	Ra	WG	15 " x 7 "	4597 - 383	R700383	R40H597	R40H9200	R40H3540	R40H3541
1981									
	Ra	LG	15 " x 6 "	4504A - 543	N/A	R40H618	NR	SP7888S	SP7888S
	Ra	LG	15 " x 6 "	4504A - 543	N/A	R40H618	NR	NR	NR
	Ra	LG	15 " x 7 "	4505A - 544	N/A	R40H618	NR	NR	NR
	Ra	LG	15 " x 7 "	4505A - 544	N/A	R40H618	NR	SP7888S	SP7888S
F050, F055, F060	Fa	KH	14 " x 2-1/2 "	2060 - 361	Discontinued	R40H596	R40H9219	R40H3536	R40H3537
F070	Fa	WG	15 " x 3 "	1245C - 321	R700321	R40H521	R40H9237	R40H3502	R40H3503
	Fa	WG	15 " x 3 "	1245C - 321	R700321	R40H521	R40H9237	R40H3502	R40H3503
	Fa	WG	15 " x 3 "	1245C - 321	R700321	R40H521	R40H9237	R40H3502	R40H3503
	Fa	WG	15 " x 3 "	1245C - 321	R700321	R40H521	R40H9237	R40H3502	R40H3503
	Fd	DN		7141 - D224	MD224[340]	69310693	60050153	NR	NR
F080, F090	Fd	DN		7149 - D236	MD236[341]	69310693	R40H5523	NR	NR
	Fd	DN		7149 - D236	MD236[341]	69310693	R40H5523	NR	NR
F090, F120	Fa	WG	15 " x 3 "	1245C - 321	R700321	R40H521	R40H9237	R40H3502	R40H3503
	Fa	WG	15 " x 3 "	1245C - 321	R700321	R40H521	R40H9237	R40H3502	R40H3503
R170, R175	Ra	KH	15 " x 5 "	4646 - 400	R700400	R40H595	R40H9220	R40H3538	R40H3539
	Ra	WG	15 " x 5 "	1252 - 346	R700346	R40H597	R40H9200	R40H3540	R40H3541
R185	Ra	WG	15 " x 6 "	4596 - 381	R700381	R40H597	R40H9200	R40H3540	R40H3541
	Ra	WG	15 " x 7 "	4597 - 383	R700383	R40H597	R40H9200	R40H3540	R40H3541
1980									
	Ra	LG	15 " x 6 "	4504A - 543	N/A	R40H618	NR	NR	NR
	Ra	LG	15 " x 6 "	4504A - 543	N/A	R40H618	NR	SP7888S	SP7888S
	Ra	LG	15 " x 7 "	4505A - 544	N/A	R40H618	NR	SP7888S	SP7888S
	Ra	LG	15 " x 7 "	4505A - 544	N/A	R40H618	NR	NR	NR
F050, F055, F060	Fa	KH	14 " x 2-1/2 "	2060 - 361	Discontinued	R40H596	R40H9219	R40H3536	R40H3537
F070	Fa	WG	15 " x 3 "	1245C - 321	R700321	R40H521	R40H9237	R40H3502	R40H3503
	Fa	WG	15 " x 3 "	1245C - 321	R700321	R40H521	R40H9237	R40H3502	R40H3503
	Fa	WG	15 " x 3 "	1245C - 321	R700321	R40H521	R40H9237	R40H3502	R40H3503
	Fa	WG	15 " x 3 "	1245C - 321	R700321	R40H521	R40H9237	R40H3502	R40H3503
	Fd	DN		7141 - D224	MD224[340]	69310693	60050153	NR	NR
F080, F090	Fd	DN		7149 - D236	MD236[341]	69310693	R40H5523	NR	NR
	Fd	DN		7149 - D236	MD236[341]	69310693	R40H5523	NR	NR
F090, F120	Fa	WG	15 " x 3 "	1245C - 321	R700321	R40H521	R40H9237	R40H3502	R40H3503
	Fa	WG	15 " x 3 "	1245C - 321	R700321	R40H521	R40H9237	R40H3502	R40H3503
R170, R175	Ra	KH	15 " x 5 "	4646 - 400	R700400	R40H595	R40H9220	R40H3538	R40H3539
	Ra	WG	15 " x 5 "	1252 - 346	R700346	R40H597	R40H9200	R40H3540	R40H3541
R185	Ra	WG	15 " x 6 "	4596 - 381	R700381	R40H597	R40H9200	R40H3540	R40H3541
	Ra	WG	15 " x 7 "	4597 - 383	R700383	R40H597	R40H9200	R40H3540	R40H3541
1979									
F050, F055, F060	Fa	KH	14 " x 2-1/2 "	2060 - 361	Discontinued	R40H596	R40H9219	R40H3536	R40H3537
F070	Fa	WG	15 " x 3 "	1245C - 321	R700321	R40H521	R40H9237	R40H3502	R40H3503
	Fa	WG	15 " x 3 "	1245C - 321	R700321	R40H521	R40H9237	R40H3502	R40H3503
	Fd	DN		7141 - D224	MD224[340]	69310693	60050153	NR	NR
F080, F090	Fd	DN		7149 - D236	MD236[341]	69310693	R40H5523	NR	NR
	Fd	DN		7149 - D236	MD236[341]	69310693	R40H5523	NR	NR
R170, R175	Ra	KH	15 " x 5 "	4646 - 400	R700400	R40H595	R40H9220	R40H3538	R40H3539
	Ra	WG	15 " x 5 "	1252 - 346	R700346	R40H597	R40H9200	R40H3540	R40H3541
R185	Ra	WG	15 " x 6 "	4596 - 381	R700381	R40H597	R40H9200	R40H3540	R40H3541
	Ra	WG	15 " x 7 "	4597 - 383	R700383	R40H597	R40H9200	R40H3540	R40H3541
Split System					R700321	R40H521	R40H9237	R40H3502	R40H3503
					R700321	R40H521	R40H9237	R40H3502	R40H3503
Split System F090, F120	Fa	WG	15 " x 3 "	1245C - 321	R700321	R40H521	R40H9237	R40H3502	R40H3503
	Fa	WG	15 " x 3 "	1245C - 321	R700321	R40H521	R40H9237	R40H3502	R40H3503

9 - 6 Stud, Dayton Rotor, Hat Style
53 - Power Brakes
214 - Power Brakes, Split System
37 - Also available as a New unit
186 - 10 Stud
219 - Power Brakes, Gasoline Engine with Vacuum Booster
41 - Aluminum piston
188 - 6 Stud, 9.251" Hub
329 - Forward

MERITOR DRUM OR ROTOR NO.	CALIPER OR CYLINDER BORE SIZE	MERITOR CALIPER OR WHEEL CYLINDER (LEFT)	MERITOR CALIPER OR WHEEL CYLINDER (RIGHT)	MERITOR CALIPER OR WHEEL CYLINDER REPAIR KIT	MERITOR CALIPER PISTON	MERITOR MASTER CYLINDER	MERITOR MASTER CYLINDER KIT	MERITOR BRAKE HOSE (LEFT)	MERITOR BRAKE HOSE (RIGHT)
									FORD(Cont.)
LN700 SERIES: LOUISVILLE 94.4 BBC SHORT CONVENTIONAL CHASSIS CAB(Cont.)									
23-122700-002[9]	2-1/2 "	R424244X	R424244X[37]	60050266	69270757[41]	R4111992[214]	R4122386	R4577452	R4577453
23-122703-002[186]	2-7/8 "	60050145X	60050145X[37]	60050146	69270702[41]	R4111992[214]	R4122386	R4577452	R4577453
23-122691-002[188]	2-7/8 "	60050145X	60050145X[37]	60050146	69270702[41]	R4111992[214]	R4122386	R4577452	R4577453
N/A	1-1/4 "	R4133581	R4133581	R4166923	NR	R4111992[214]	R4122386	R4577452	R4577453
N/A	1-1/4 "	R4133720	R4133721	R4166923	NR	R4111992[214]	R4122386	R4577452	R4577453
N/A	1-1/2 "	R4033607	R4033607	R4166818	NR	-	-	R4577147	R4577147
N/A	1-5/8 "	R4133338	R4133338	R4166689	NR	-	-	R4577147	R4577147
N/A	1-5/8 "	R4133338	R4133338	R4166689	NR	-	-	R4577147	R4577147
N/A	1-3/4 "	R4133400	R4133400	R4166917	NR	-	-	R4577147	R4577147
N/A	1-5/8 "	201185	201186[329]	SP7895S	NR	-	-	R4577147	R4577147
N/A	1-5/8 "	201181	201182	SP7895S	NR	-	-	R4577147	R4577147
N/A	1-5/8 "	201181	201182	SP7895S	NR	-	-	R4577147	R4577147
N/A	1-5/8 "	201185	201186[329]	SP7895S	NR	-	-	R4577147	R4577147
N/A	1.09375	R4133484	R4133485	R4166819	NR	R4111629[53]	R4122484	R4577460	R4577460
N/A	1-1/8 "	R4133714	R4133715	R4166926	NR	R4111992[214]	R4122386	R4577452	R4577453
N/A	1-1/8 "	R4133719	R4133718	R4166926	NR	R4111992[214]	R4122386	R4577452	R4577453
N/A	1-1/8 "	R4133716	R4133717	R4166926	NR	R4111911[219]	R4122387	R4577454	R4577455
N/A	1-1/8 "	R4133714	R4133715	R4166926	NR	R4111911[219]	R4122387	R4577454	R4577455
23-122700-002[9]	2-1/2 "	R424244X	R424244X[37]	60050266	69270757[41]	R4111992[214]	R4122386	R4577452	R4577453
23-122691-002[188]	2-7/8 "	60050145X	60050145X[37]	60050146	69270702[41]	R4111992[214]	R4122386	R4577452	R4577453
23-122703-002[186]	2-7/8 "	60050145X	60050145X[37]	60050146	69270702[41]	R4111992[214]	R4122386	R4577452	R4577453
N/A	1-1/4 "	R4133720	R4133721	R4166923	NR	R4111992[214]	R4122386	R4577452	R4577453
N/A	1-1/4 "	R4133581	R4133581	R4166923	NR	R4111992[214]	R4122386	R4577452	R4577453
N/A	1-1/2 "	R4033607	R4033607	R4166818	NR	-	-	R4577147	R4577147
N/A	1-5/8 "	R4133338	R4133338	R4166689	NR	-	-	R4577147	R4577147
N/A	1-5/8 "	R4133338	R4133338	R4166689	NR	-	-	R4577147	R4577147
N/A	1-3/4 "	R4133400	R4133400	R4166917	NR	-	-	R4577147	R4577147
N/A	1-5/8 "	201181	201182	SP7895S	NR	-	-	R4577147	R4577147
N/A	1-5/8 "	201185	201186[329]	SP7895S	NR	-	-	R4577147	R4577147
N/A	1-5/8 "	201185	201186[329]	SP7895S	NR	-	-	R4577147	R4577147
N/A	1-5/8 "	201181	201182	SP7895S	NR	-	-	R4577147	R4577147
N/A	1.09375	R4133484	R4133485	R4166819	NR	R4111629[53]	R4122484	R4577460	R4577460
N/A	1-1/8 "	R4133716	R4133717	R4166926	NR	R4111911[219]	R4122387	R4577454	R4577455
N/A	1-1/8 "	R4133714	R4133715	R4166926	NR	R4111911[219]	R4122387	R4577454	R4577455
N/A	1-1/8 "	R4133714	R4133715	R4166926	NR	R4111992[214]	R4122386	R4577452	R4577453
N/A	1-1/8 "	R4133719	R4133718	R4166926	NR	R4111992[214]	R4122386	R4577452	R4577453
23-122700-002[9]	2-1/2 "	R424244X	R424244X[37]	60050266	69270757[41]	R4111992[214]	R4122386	R4577452	R4577453
23-122691-002[188]	2-7/8 "	60050145X	60050145X[37]	60050146	69270702[41]	R4111992[214]	R4122386	R4577452	R4577453
23-122703-002[186]	2-7/8 "	60050145X	60050145X[37]	60050146	69270702[41]	R4111992[214]	R4122386	R4577452	R4577453
N/A	1-1/4 "	R4133720	R4133721	R4166923	NR	R4111992[214]	R4122386	R4577452	R4577453
N/A	1-1/4 "	R4133581	R4133581	R4166923	NR	R4111992[214]	R4122386	R4577452	R4577453
N/A	1-1/2 "	R4033607	R4033607	R4166818	NR	-	-	R4577147	R4577147
N/A	1-5/8 "	R4133338	R4133338	R4166689	NR	-	-	R4577147	R4577147
N/A	1-5/8 "	R4133338	R4133338	R4166689	NR	-	-	R4577147	R4577147
N/A	1-3/4 "	R4133400	R4133400	R4166917	NR	-	-	R4577147	R4577147
N/A	1.09375	R4133484	R4133485	R4166819	NR	-	-	-	-
N/A	1-1/8 "	R4133716	R4133717	R4166926	NR	-	-	-	-
N/A	1-1/8 "	R4133714	R4133715	R4166926	NR	-	-	-	-
23-122700-002[9]	2-1/2 "	R424244X	R424244X[37]	60050266	69270757[41]	-	-	-	-
23-122703-002[186]	2-7/8 "	60050145X	60050145X[37]	60050146	69270702[41]	-	-	-	-
23-122691-002[188]	2-7/8 "	60050145X	60050145X[37]	60050146	69270702[41]	-	-	-	-
N/A	1-1/2 "	R4033607	R4033607	R4166818	NR	-	-	-	-
N/A	1-5/8 "	R4133338	R4133338	R4166689	NR	-	-	-	-
N/A	1-5/8 "	R4133338	R4133338	R4166689	NR	-	-	-	-
N/A	1-3/4 "	R4133400	R4133400	R4166917	NR	-	-	-	-
N/A		R4133719	R4133718	R4166926	NR	N/A[358]	R4122688	-	-
N/A		R4133714	R4133715	R4166926	NR	N/A[358]	R4122688	-	-
N/A	1-1/4 "	R4133581	R4133581	R4166923	NR	-	-	-	-
N/A	1-1/4 "	R4133720	R4133721	R4166923	NR	-	-	-	-

340 - Use 69160457 for Disc Pad Retainer Clip

341 - Use 69160445 for Disc Pad Retainer Clip

358 - Split System

MAKE MODEL YEAR AXLE CODE AXLE WEIGHT	AXLE & BRK. TYPE	BRK. MFG.	BRAKE SIZE	FMSI	MERITOR DISC PAD OR BRAKE SHOE	MERITOR GUIDE PIN OR RETURN SPRING KIT	MERITOR CALIPER HWD. KIT OR RETURN SPRING KIT	MERITOR ADJUSTER KIT (LEFT WHEEL)	MERITOR ADJUSTER KIT (RIGHT WHEEL)
FORD(Cont.)									
LN700 SERIES: LOUISVILLE 94.4 BBC SHORT CONVENTIONAL CHASSIS CAB(Cont.)									
1978									
F050, F055, F060	Fa	KH	14 " x 2-1/2 "	2060 - 361	Discontinued	R40H596	R40H9219	R40H3536	R40H3537
F070	Fa	WG	15 " x 3 "	1245C - 321	R700321	R40H521	R40H9237	R40H3502	R40H3503
	Fa	WG	15 " x 3 "	1245C - 321	R700321	R40H521	R40H9237	R40H3502	R40H3503
	Fd	DN		7141 - D224	MD224[340]	69310693	60050153	NR	NR
F080, F090	Fd	DN		7149 - D236	MD236[341]	69310693	R40H5523	NR	NR
	Fd	DN		7149 - D236	MD236[341]	69310693	R40H5523	NR	NR
R170, R175	Ra	KH	15 " x 5 "	4646 - 400	R700400	R40H595	R40H9220	R40H3538	R40H3539
	Ra	WG	15 " x 5 "	1252 - 346	R700346	R40H597	R40H9200	R40H3540	R40H3541
R185	Ra	WG	15 " x 6 "	4596 - 381	R700381	R40H597	R40H9200	R40H3540	R40H3541
	Ra	WG	15 " x 7 "	4597 - 383	R700383	R40H597	R40H9200	R40H3540	R40H3541
Split System					R700321	R40H521	R40H9237	R40H3502	R40H3503
					R700321	R40H521	R40H9237	R40H3502	R40H3503
Split System									
F090, F120	Fa	WG	15 " x 3 "	1245C - 321	R700321	R40H521	R40H9237	R40H3502	R40H3503
	Fa	WG	15 " x 3 "	1245C - 321	R700321	R40H521	R40H9237	R40H3502	R40H3503
1977									
F050, F055, F060	Fa	KH	14 " x 2-1/2 "	2060 - 361	Discontinued	R40H596	R40H9219	R40H3536	R40H3537
	Fa	KH	14 " x 2-1/2 "	2060 - 361	Discontinued	R40H596	R40H9219	R40H3536	R40H3537
F070	Fa	WG	15 " x 3 "	1245C - 321	R700321	R40H521	R40H9237	R40H3502	R40H3503
	Fa	WG	15 " x 3 "	1245C - 321	R700321	R40H521	R40H9237	R40H3502	R40H3503
	Fa	WG	15 " x 3 "	1245C - 321	R700321	R40H521	R40H9237	R40H3502	R40H3503
	Fa	WG	15 " x 3 "	1245C - 321	R700321	R40H521	R40H9237	R40H3502	R40H3503
	Fa	WG	15 " x 3 "	1245C - 321	R700321	R40H521	R40H9237	R40H3502	R40H3503
	Fa	WG	15 " x 3 "	1245C - 321	R700321	R40H521	R40H9237	R40H3502	R40H3503
	Fa	WG	15 " x 3 "	1245C - 321	R700321	R40H521	R40H9237	R40H3502	R40H3503
	Fa	WG	15 " x 3 "	1245C - 321	R700321	R40H521	R40H9237	R40H3502	R40H3503
	Fd	DN		7141 - D224	MD224[340]	69310693	60050153	NR	NR
F080, F090	Fd	DN		7149 - D236	MD236[341]	69310693	R40H5523	NR	NR
	Fd	DN		7149 - D236	MD236[341]	69310693	R40H5523	NR	NR
F090, F120	Fa	WG	15 " x 3 "	1245C - 321	R700321	R40H521	R40H9237	R40H3502	R40H3503
	Fa	WG	15 " x 3 "	1245C - 321	R700321	R40H521	R40H9237	R40H3502	R40H3503
	Fa	WG	15 " x 3 "	1245C - 321	R700321	R40H521	R40H9237	R40H3502	R40H3503
	Fa	WG	15 " x 3 "	1245C - 321	R700321	R40H521	R40H9237	R40H3502	R40H3503
R170, R175	Ra	KH	15 " x 5 "	4646 - 400	R700400	R40H595	R40H9220	R40H3538	R40H3539
	Ra	KH	15 " x 5 "	4646 - 400	R700400	R40H595	R40H9220	R40H3538	R40H3539
	Ra	KH	15 " x 5 "	4646 - 400	R700400	R40H595	R40H9220	R40H3538	R40H3539
	Ra	WG	15 " x 5 "	1252 - 346	R700346	R40H597	R40H9200	R40H3540	R40H3541
	Ra	WG	15 " x 5 "	1252 - 346	R700346	R40H597	R40H9200	R40H3540	R40H3541
R185	Ra	WG	15 " x 6 "	4596 - 381	R700381	R40H597	R40H9200	R40H3540	R40H3541
	Ra	WG	15 " x 6 "	4596 - 381	R700381	R40H597	R40H9200	R40H3540	R40H3541
	Ra	WG	15 " x 7 "	4597 - 383	R700383	R40H597	R40H9200	R40H3540	R40H3541
	Ra	WG	15 " x 7 "	4597 - 383	R700383	R40H597	R40H9200	R40H3540	R40H3541
1976									
F050, F055, F060	Fa	KH	14 " x 2-1/2 "	2060 - 361	Discontinued	R40H596	R40H9219	R40H3536	R40H3537
	Fa	KH	14 " x 2-1/2 "	2060 - 361	Discontinued	R40H596	R40H9219	R40H3536	R40H3537
F070	Fd	DN		7141 - D224	MD224[340]	69310693	60050153	NR	NR
F080, F090	Fd	DN		7149 - D236	MD236[341]	69310693	R40H5523	NR	NR
	Fd	DN		7149 - D236	MD236[341]	69310693	R40H5523	NR	NR
R170, R175	Ra	KH	15 " x 5 "	4646 - 400	R700400	R40H595	R40H9220	R40H3538	R40H3539
	Ra	KH	15 " x 5 "	4646 - 400	R700400	R40H595	R40H9220	R40H3538	R40H3539
	Ra	KH	15 " x 5 "	4646 - 400	R700400	R40H595	R40H9220	R40H3538	R40H3539
	Ra	WG	15 " x 5 "	1252 - 346	R700346	R40H597	R40H9200	R40H3540	R40H3541
	Ra	WG	15 " x 5 "	1252 - 346	R700346	R40H597	R40H9200	R40H3540	R40H3541
R185	Ra	WG	15 " x 6 "	4596 - 381	R700381	R40H597	R40H9200	R40H3540	R40H3541
	Ra	WG	15 " x 6 "	4596 - 381	R700381	R40H597	R40H9200	R40H3540	R40H3541
	Ra	WG	15 " x 7 "	4597 - 383	R700383	R40H597	R40H9200	R40H3540	R40H3541
	Ra	WG	15 " x 7 "	4597 - 383	R700383	R40H597	R40H9200	R40H3540	R40H3541
Single System									
F070	Fa	WG	15 " x 3 "	1245C - 321	R700321	R40H521	R40H9237	R40H3502	R40H3503
	Fa	WG	15 " x 3 "	1245C - 321	R700321	R40H521	R40H9237	R40H3502	R40H3503
	Fa	WG	15 " x 3 "	1245C - 321	R700321	R40H521	R40H9237	R40H3502	R40H3503
	Fa	WG	15 " x 3 "	1245C - 321	R700321	R40H521	R40H9237	R40H3502	R40H3503
Split System									
F070	Fa	WG	15 " x 3 "	1245C - 321	R700321	R40H521	R40H9237	R40H3502	R40H3503

9 - 6 Stud, Dayton Rotor, Hat Style
42 - 6 Stud, Dayton Rotor, "U" Style
340 - Use 69160457 for Disc Pad Retainer Clip
37 - Also available as a New unit
186 - 10 Stud
341 - Use 69160445 for Disc Pad Retainer Clip
41 - Aluminum piston
188 - 6 Stud, 9.251" Hub
358 - Split System

MERITOR DRUM OR ROTOR NO.	CALIPER OR CYLINDER BORE SIZE	MERITOR CALIPER OR WHEEL CYLINDER (LEFT)	MERITOR CALIPER OR WHEEL CYLINDER (RIGHT)	MERITOR CALIPER OR WHEEL CYLINDER REPAIR KIT	MERITOR CALIPER PISTON	MERITOR MASTER CYLINDER	MERITOR MASTER CYLINDER KIT	MERITOR BRAKE HOSE (LEFT)	MERITOR BRAKE HOSE (RIGHT)
FORD(Cont.)									
LN700 SERIES: LOUISVILLE 94.4 BBC SHORT CONVENTIONAL CHASSIS CAB(Cont.)									
N/A	1.09375	R4133484	R4133485	R4166819	NR	-	-	-	-
N/A	1-1/8 "	R4133716	R4133717	R4166926	NR	-	-	-	-
N/A	1-1/8 "	R4133714	R4133715	R4166926	NR	-	-	-	-
23-122700-002[9]	2-1/2 "	R424244X	R424244X[37]	60050266	69270757[41]	-	-	-	-
23-122691-002[188]	2-7/8 "	60050145X	60050145X[37]	60050146	69270702[41]	-	-	-	-
23-122703-002[186]	2-7/8 "	60050145X	60050145X[37]	60050146	69270702[41]	-	-	-	-
N/A	1-1/2 "	R4033607	R4033607	R4166818	NR	-	-	-	-
N/A	1-5/8 "	R4133338	R4133338	R4166689	NR	-	-	-	-
N/A	1-5/8 "	R4133338	R4133338	R4166689	NR	-	-	-	-
N/A	1-3/4 "	R4133400	R4133400	R4166917	NR	-	-	-	-
N/A		R4133719	R4133718	R4166926	NR	N/A[358]	R4122688	-	-
N/A		R4133714	R4133715	R4166926	NR	N/A[358]	R4122688	-	-
N/A	1-1/4 "	R4133720	R4133721	R4166923	NR	-	-	-	-
N/A	1-1/4 "	R4133581	R4133581	R4166923	NR	-	-	-	-
-	1.09375	R4133484	R4133485	R4166819	NR	-	-	-	-
-	1.09375	R4133484	R4133485	R4166819	NR	-	-	-	-
-	1-1/8 "	R4133714	R4133715	R4166926	NR	-	-	-	-
-	1-1/8 "	R4133719	R4133718	R4166926	NR	N/A[358]	R4122688	-	-
-	1-1/8 "	R4133714	R4133715	R4166926	NR	N/A[358]	R4122688	-	-
-	1-1/8 "	R4133719	R4133718	R4166926	NR	N/A[358]	R4122688	-	-
-	1-1/8 "	R4133716	R4133717	R4166926	NR	-	-	-	-
-	1-1/8 "	R4133714	R4133715	R4166926	NR	N/A[358]	R4122688	-	-
-	1-1/8 "	R4133716	R4133717	R4166926	NR	-	-	-	-
-	1-1/8 "	R4133714	R4133715	R4166926	NR	-	-	-	-
23-122700-002[9]	2-1/2 "	R424244X	R424244X[37]	60050266	69270757[41]	-	-	-	-
23-122703-002[186]	2-7/8 "	60050145X	60050145X[37]	60050146	69270702[41]	-	-	-	-
23-122691-002[42]	2-7/8 "	60050145X	60050145X[37]	60050146	69270702[41]	-	-	-	-
-	1-1/4 "	R4133720	R4133721	R4166923	NR	-	-	-	-
-	1-1/4 "	R4133581	R4133581	R4166923	NR	-	-	-	-
-	1-1/4 "	R4133720	R4133721	R4166923	NR	-	-	-	-
-	1-1/4 "	R4133581	R4133582	R4166923	NR	-	-	-	-
-	1-1/2 "	R4033607	R4033607	R4166818	NR	-	-	-	-
-	1-5/8 "	R4133606	R4133606	R415193	NR	-	-	-	-
-	1-1/2 "	R4033607	R4033607	R4166818	NR	-	-	-	-
-	1-5/8 "	R4133338	R4133338	R4166689	NR	-	-	-	-
-	1-5/8 "	R4133338	R4133338	R4166689	NR	-	-	-	-
-	1-5/8 "	R4133338	R4133338	R4166689	NR	-	-	-	-
-	1-5/8 "	R4133338	R4133338	R4166689	NR	-	-	-	-
-	1-3/4 "	R4133400	R4133400	R4166917	NR	-	-	-	-
-	1-3/4 "	R4133400	R4133400	R4166917	NR	-	-	-	-
-	1.09375	R4133484	R4133485	R4166819	NR	-	-	-	-
-	1.09375	R4133484	R4133485	R4166819	NR	-	-	-	-
23-122700-002[9]	2-1/2 "	R424244X	R424244X[37]	60050266	69270757[41]	-	-	-	-
23-122691-002[42]	2-7/8 "	60050145X	60050145X[37]	60050146	69270702[41]	-	-	-	-
23-122703-002[186]	2-7/8 "	60050145X	60050145X[37]	60050146	69270702[41]	-	-	-	-
-	1-1/2 "	R4033607	R4033607	R4166818	NR	-	-	-	-
-	1-1/2 "	R4033607	R4033607	R4166818	NR	-	-	-	-
-	1-5/8 "	R4133606	R4133606	R415193	NR	-	-	-	-
-	1-5/8 "	R4133338	R4133338	R4166689	NR	-	-	-	-
-	1-5/8 "	R4133338	R4133338	R4166689	NR	-	-	-	-
-	1-5/8 "	R4133338	R4133338	R4166689	NR	-	-	-	-
-	1-5/8 "	R4133338	R4133338	R4166689	NR	-	-	-	-
-	1-3/4 "	R4133400	R4133400	R4166917	NR	-	-	-	-
-	1-3/4 "	R4133400	R4133400	R4166917	NR	-	-	-	-
-	1-1/8 "	R4133714	R4133715	R4166926	NR	-	-	-	-
-	1-1/8 "	R4133716	R4133717	R4166926	NR	-	-	-	-
-	1-1/8 "	R4133716	R4133717	R4166926	NR	-	-	-	-
-	1-1/8 "	R4133714	R4133715	R4166926	NR	-	-	-	-
-	1-1/8 "	R4133719	R4133718	R4166926	NR	N/A[358]	R4122688	-	-

MAKE MODEL YEAR AXLE CODE AXLE WEIGHT	AXLE & BRK. TYPE	BRK. MFG.	BRAKE SIZE	FMSI	MERITOR DISC PAD OR BRAKE SHOE	MERITOR GUIDE PIN OR RETURN SPRING KIT	MERITOR CALIPER HWD. KIT OR RETURN SPRING KIT	MERITOR ADJUSTER KIT (LEFT WHEEL)	MERITOR ADJUSTER KIT (RIGHT WHEEL)
FORD(Cont.)									
LN700 SERIES: LOUISVILLE 94.4 BBC SHORT CONVENTIONAL CHASSIS CAB(Cont.)									
1976									
	Fa	WG	15 " x 3 "	1245C - 321	R700321	R40H521	R40H9237	R40H3502	R40H3503
	Fa	WG	15 " x 3 "	1245C - 321	R700321	R40H521	R40H9237	R40H3502	R40H3503
	Fa	WG	15 " x 3 "	1245C - 321	R700321	R40H521	R40H9237	R40H3502	R40H3503
Split System									
F090, F120	Fa	WG	15 " x 3 "	1245C - 321	R700321	R40H521	R40H9237	R40H3502	R40H3503
	Fa	WG	15 " x 3 "	1245C - 321	R700321	R40H521	R40H9237	R40H3502	R40H3503
	Fa	WG	15 " x 3 "	1245C - 321	R700321	R40H521	R40H9237	R40H3502	R40H3503
	Fa	WG	15 " x 3 "	1245C - 321	R700321	R40H521	R40H9237	R40H3502	R40H3503
1975									
F050, F055, F060	Fa	KH	14 " x 2-1/2 "	2060 - 361	Discontinued	R40H596	R40H9219	R40H3536	R40H3537
	Fa	KH	14 " x 2-1/2 "	2060 - 361	Discontinued	R40H596	R40H9219	R40H3536	R40H3537
F070	Fd	DN		7141 - D224	MD224[340]	69310693	60050153	NR	NR
F080, F090	Fd	DN		7149 - D236	MD236[341]	69310693	R40H5523	NR	NR
	Fd	DN		7149 - D236	MD236[341]	69310693	R40H5523	NR	NR
R170, R175	Ra	KH	15 " x 5 "	4646 - 400	R700400	R40H595	R40H9220	R40H3538	R40H3539
	Ra	KH	15 " x 5 "	4646 - 400	R700400	R40H595	R40H9220	R40H3538	R40H3539
	Ra	KH	15 " x 5 "	4646 - 400	R700400	R40H595	R40H9220	R40H3538	R40H3539
	Ra	WG	15 " x 5 "	1252 - 346	R700346	R40H597	R40H9200	R40H3540	R40H3541
	Ra	WG	15 " x 5 "	1252 - 346	R700346	R40H597	R40H9200	R40H3540	R40H3541
R185	Ra	WG	15 " x 6 "	4596 - 381	R700381	R40H597	R40H9200	R40H3540	R40H3541
	Ra	WG	15 " x 6 "	4596 - 381	R700381	R40H597	R40H9200	R40H3540	R40H3541
	Ra	WG	15 " x 7 "	4597 - 383	R700383	R40H597	R40H9200	R40H3540	R40H3541
	Ra	WG	15 " x 7 "	4597 - 383	R700383	R40H597	R40H9200	R40H3540	R40H3541
Single System									
F070	Fa	WG	15 " x 3 "	1245C - 321	R700321	R40H521	R40H9237	R40H3502	R40H3503
	Fa	WG	15 " x 3 "	1245C - 321	R700321	R40H521	R40H9237	R40H3502	R40H3503
	Fa	WG	15 " x 3 "	1245C - 321	R700321	R40H521	R40H9237	R40H3502	R40H3503
	Fa	WG	15 " x 3 "	1245C - 321	R700321	R40H521	R40H9237	R40H3502	R40H3503
Split System									
F070	Fa	WG	15 " x 3 "	1245C - 321	R700321	R40H521	R40H9237	R40H3502	R40H3503
	Fa	WG	15 " x 3 "	1245C - 321	R700321	R40H521	R40H9237	R40H3502	R40H3503
	Fa	WG	15 " x 3 "	1245C - 321	R700321	R40H521	R40H9237	R40H3502	R40H3503
	Fa	WG	15 " x 3 "	1245C - 321	R700321	R40H521	R40H9237	R40H3502	R40H3503
Split System									
F090, F120	Fa	WG	15 " x 3 "	1245C - 321	R700321	R40H521	R40H9237	R40H3502	R40H3503
	Fa	WG	15 " x 3 "	1245C - 321	R700321	R40H521	R40H9237	R40H3502	R40H3503
	Fa	WG	15 " x 3 "	1245C - 321	R700321	R40H521	R40H9237	R40H3502	R40H3503
	Fa	WG	15 " x 3 "	1245C - 321	R700321	R40H521	R40H9237	R40H3502	R40H3503
1974									
F050, F055, F060	Fa	KH	14 " x 2-1/2 "	2060 - 361	Discontinued	R40H596	R40H9219	R40H3536	R40H3537
	Fa	KH	14 " x 2-1/2 "	2060 - 361	Discontinued	R40H596	R40H9219	R40H3536	R40H3537
F070	Fd	DN		7141 - D224	MD224[340]	69310693	60050153	NR	NR
F080, F090	Fd	DN		7149 - D236	MD236[341]	69310693	R40H5523	NR	NR
	Fd	DN		7149 - D236	MD236[341]	69310693	R40H5523	NR	NR
R170, R175	Ra	KH	15 " x 5 "	4646 - 400	R700400	R40H595	R40H9220	R40H3538	R40H3539
	Ra	KH	15 " x 5 "	4646 - 400	R700400	R40H595	R40H9220	R40H3538	R40H3539
	Ra	KH	15 " x 5 "	4646 - 400	R700400	R40H595	R40H9220	R40H3538	R40H3539
	Ra	WG	15 " x 5 "	1252 - 346	R700346	R40H597	R40H9200	R40H3540	R40H3541
	Ra	WG	15 " x 5 "	1252 - 346	R700346	R40H597	R40H9200	R40H3540	R40H3541
R185	Ra	WG	15 " x 6 "	4596 - 381	R700381	R40H597	R40H9200	R40H3540	R40H3541
	Ra	WG	15 " x 6 "	4596 - 381	R700381	R40H597	R40H9200	R40H3540	R40H3541
	Ra	WG	15 " x 7 "	4597 - 383	R700383	R40H597	R40H9200	R40H3540	R40H3541
	Ra	WG	15 " x 7 "	4597 - 383	R700383	R40H597	R40H9200	R40H3540	R40H3541
Single System									
F070	Fa	WG	15 " x 3 "	1245C - 321	R700321	R40H521	R40H9237	R40H3502	R40H3503
	Fa	WG	15 " x 3 "	1245C - 321	R700321	R40H521	R40H9237	R40H3502	R40H3503
	Fa	WG	15 " x 3 "	1245C - 321	R700321	R40H521	R40H9237	R40H3502	R40H3503
	Fa	WG	15 " x 3 "	1245C - 321	R700321	R40H521	R40H9237	R40H3502	R40H3503
Split System									
F070	Fa	WG	15 " x 3 "	1245C - 321	R700321	R40H521	R40H9237	R40H3502	R40H3503
	Fa	WG	15 " x 3 "	1245C - 321	R700321	R40H521	R40H9237	R40H3502	R40H3503
	Fa	WG	15 " x 3 "	1245C - 321	R700321	R40H521	R40H9237	R40H3502	R40H3503
	Fa	WG	15 " x 3 "	1245C - 321	R700321	R40H521	R40H9237	R40H3502	R40H3503
Split System									
F090, F120	Fa	WG	15 " x 3 "	1245C - 321	R700321	R40H521	R40H9237	R40H3502	R40H3503

9 - 6 Stud, Dayton Rotor, Hat Style
42 - 6 Stud, Dayton Rotor, "U" Style
341 - Use 69160445 for Disc Pad Retainer Clip
37 - Also available as a New unit
186 - 10 Stud
358 - Split System
41 - Aluminum piston
340 - Use 69160457 for Disc Pad Retainer Clip

MERITOR DRUM OR ROTOR NO.	CALIPER OR CYLINDER BORE SIZE	MERITOR CALIPER OR WHEEL CYLINDER (LEFT)	MERITOR CALIPER OR WHEEL CYLINDER (RIGHT)	MERITOR CALIPER OR WHEEL CYLINDER REPAIR KIT	MERITOR CALIPER PISTON	MERITOR MASTER CYLINDER	MERITOR MASTER CYLINDER KIT	MERITOR BRAKE HOSE (LEFT)	MERITOR BRAKE HOSE (RIGHT)
									FORD(Cont.)
LN700 SERIES: LOUISVILLE 94.4 BBC SHORT CONVENTIONAL CHASSIS CAB(Cont.)									
-	1-1/8 "	R4133714	R4133715	R4166926	NR	N/A[358]	R4122688	-	-
-	1-1/8 "	R4133714	R4133715	R4166926	NR	N/A[358]	R4122688	-	-
-	1-1/8 "	R4133719	R4133718	R4166926	NR	N/A[358]	R4122688	-	-
-	1-1/4 "	R4133581	R4133581	R4166923	NR	-	-	-	-
-	1-1/4 "	R4133720	R4133721	R4166923	NR	-	-	-	-
-	1-1/4 "	R4133581	R4133582	R4166923	NR	-	-	-	-
-	1-1/4 "	R4133720	R4133721	R4166923	NR	-	-	-	-
-	1.09375	R4133484	R4133485	R4166819	NR	-	-	-	-
-	1.09375	R4133484	R4133485	R4166819	NR	-	-	-	-
23-122700-002[9]	2-1/2 "	R424244X	R424244X[37]	60050266	69270757[41]	-	-	-	-
23-122703-002[186]	2-7/8 "	60050145X	60050145X[37]	60050146	69270702[41]	-	-	-	-
23-122691-002[42]	2-7/8 "	60050145X	60050145X[37]	60050146	69270702[41]	-	-	-	-
-	1-1/2 "	R4033607	R4033607	R4166818	NR	-	-	-	-
-	1-5/8 "	R4133606	R4133606	R415193	NR	-	-	-	-
-	1-1/2 "	R4033607	R4033607	R4166818	NR	-	-	-	-
-	1-5/8 "	R4133338	R4133338	R4166689	NR	-	-	-	-
-	1-5/8 "	R4133338	R4133338	R4166689	NR	-	-	-	-
-	1-5/8 "	R4133338	R4133338	R4166689	NR	-	-	-	-
-	1-5/8 "	R4133338	R4133338	R4166689	NR	-	-	-	-
-	1-3/4 "	R4133400	R4133400	R4166917	NR	-	-	-	-
-	1-3/4 "	R4133400	R4133400	R4166917	NR	-	-	-	-
-	1-1/8 "	R4133716	R4133717	R4166926	NR	-	-	-	-
-	1-1/8 "	R4133716	R4133717	R4166926	NR	-	-	-	-
-	1-1/8 "	R4133714	R4133715	R4166926	NR	-	-	-	-
-	1-1/8 "	R4133714	R4133715	R4166926	NR	-	-	-	-
-	1-1/8 "	R4133719	R4133718	R4166926	NR	N/A[358]	R4122688	-	-
-	1-1/8 "	R4133714	R4133715	R4166926	NR	N/A[358]	R4122688	-	-
-	1-1/8 "	R4133714	R4133715	R4166926	NR	N/A[358]	R4122688	-	-
-	1-1/8 "	R4133719	R4133718	R4166926	NR	N/A[358]	R4122688	-	-
-	1-1/4 "	R4133581	R4133581	R4166923	NR	-	-	-	-
-	1-1/4 "	R4133581	R4133582	R4166923	NR	-	-	-	-
-	1-1/4 "	R4133720	R4133721	R4166923	NR	-	-	-	-
-	1-1/4 "	R4133720	R4133721	R4166923	NR	-	-	-	-
-	1.09375	R4133484	R4133485	R4166819	NR	-	-	-	-
-	1.09375	R4133484	R4133485	R4166819	NR	-	-	-	-
23-122700-002[9]	2-1/2 "	R424244X	R424244X[37]	60050266	69270757[41]	-	-	-	-
23-122691-002[42]	2-7/8 "	60050145X	60050145X[37]	60050146	69270702[41]	-	-	-	-
23-122703-002[186]	2-7/8 "	60050145X	60050145X[37]	60050146	69270702[41]	-	-	-	-
-	1-5/8 "	R4133606	R4133606	R415193	NR	-	-	-	-
-	1-1/2 "	R4033607	R4033607	R4166818	NR	-	-	-	-
-	1-1/2 "	R4033607	R4033607	R4166818	NR	-	-	-	-
-	1-5/8 "	R4133338	R4133338	R4166689	NR	-	-	-	-
-	1-5/8 "	R4133338	R4133338	R4166689	NR	-	-	-	-
-	1-5/8 "	R4133338	R4133338	R4166689	NR	-	-	-	-
-	1-5/8 "	R4133338	R4133338	R4166689	NR	-	-	-	-
-	1-3/4 "	R4133400	R4133400	R4166917	NR	-	-	-	-
-	1-3/4 "	R4133400	R4133400	R4166917	NR	-	-	-	-
-	1-1/8 "	R4133714	R4133715	R4166926	NR	-	-	-	-
-	1-1/8 "	R4133716	R4133717	R4166926	NR	-	-	-	-
-	1-1/8 "	R4133714	R4133715	R4166926	NR	-	-	-	-
-	1-1/8 "	R4133716	R4133717	R4166926	NR	-	-	-	-
-	1-1/8 "	R4133719	R4133718	R4166926	NR	N/A[358]	R4122688	-	-
-	1-1/8 "	R4133714	R4133715	R4166926	NR	N/A[358]	R4122688	-	-
-	1-1/8 "	R4133714	R4133715	R4166926	NR	N/A[358]	R4122688	-	-
-	1-1/8 "	R4133719	R4133718	R4166926	NR	N/A[358]	R4122688	-	-
-	1-1/4 "	R4133720	R4133721	R4166923	NR	-	-	-	-

MAKE MODEL YEAR AXLE CODE AXLE WEIGHT	AXLE & BRK. TYPE	BRK. MFG.	BRAKE SIZE	FMSI	MERITOR DISC PAD OR BRAKE SHOE	MERITOR GUIDE PIN OR RETURN SPRING KIT	MERITOR CALIPER HWD. KIT OR RETURN SPRING KIT	MERITOR ADJUSTER KIT (LEFT WHEEL)	MERITOR ADJUSTER KIT (RIGHT WHEEL)
FORD(Cont.)									
LN700 SERIES: LOUISVILLE 94.4 BBC SHORT CONVENTIONAL CHASSIS CAB(Cont.)									
1974									
	Fa	WG	15 " x 3 "	1245C - 321	R700321	R40H521	R40H9237	R40H3502	R40H3503
	Fa	WG	15 " x 3 "	1245C - 321	R700321	R40H521	R40H9237	R40H3502	R40H3503
	Fa	WG	15 " x 3 "	1245C - 321	R700321	R40H521	R40H9237	R40H3502	R40H3503
1973									
F050, F055, F060	Fa	KH	14 " x 2-1/2 "	2060 - 361	Discontinued	R40H596	R40H9219	R40H3536	R40H3537
	Fa	KH	14 " x 2-1/2 "	2060 - 361	Discontinued	R40H596	R40H9219	R40H3536	R40H3537
F070	Fd	DN		7141 - D224	MD224[340]	69310693	60050153	NR	NR
F080, F090	Fd	DN		7149 - D236	MD236[341]	69310693	R40H5523	NR	NR
	Fd	DN		7149 - D236	MD236[341]	69310693	R40H5523	NR	NR
R170, R175	Ra	KH	15 " x 5 "	4646 - 400	R700400	R40H595	R40H9220	R40H3538	R40H3539
	Ra	KH	15 " x 5 "	4646 - 400	R700400	R40H595	R40H9220	R40H3538	R40H3539
	Ra	KH	15 " x 5 "	4646 - 400	R700400	R40H595	R40H9220	R40H3538	R40H3539
	Ra	WG	15 " x 5 "	1252 - 346	R700346	R40H597	R40H9200	R40H3540	R40H3541
	Ra	WG	15 " x 5 "	1252 - 346	R700346	R40H597	R40H9200	R40H3540	R40H3541
R185	Ra	WG	15 " x 6 "	4596 - 381	R700381	R40H597	R40H9200	R40H3540	R40H3541
	Ra	WG	15 " x 6 "	4596 - 381	R700381	R40H597	R40H9200	R40H3540	R40H3541
	Ra	WG	15 " x 7 "	4597 - 383	R700383	R40H597	R40H9200	R40H3540	R40H3541
	Ra	WG	15 " x 7 "	4597 - 383	R700383	R40H597	R40H9200	R40H3540	R40H3541
Single System									
F070	Fa	WG	15 " x 3 "	1245C - 321	R700321	R40H521	R40H9237	R40H3502	R40H3503
	Fa	WG	15 " x 3 "	1245C - 321	R700321	R40H521	R40H9237	R40H3502	R40H3503
	Fa	WG	15 " x 3 "	1245C - 321	R700321	R40H521	R40H9237	R40H3502	R40H3503
	Fa	WG	15 " x 3 "	1245C - 321	R700321	R40H521	R40H9237	R40H3502	R40H3503
Split System									
F070	Fa	WG	15 " x 3 "	1245C - 321	R700321	R40H521	R40H9237	R40H3502	R40H3503
	Fa	WG	15 " x 3 "	1245C - 321	R700321	R40H521	R40H9237	R40H3502	R40H3503
	Fa	WG	15 " x 3 "	1245C - 321	R700321	R40H521	R40H9237	R40H3502	R40H3503
	Fa	WG	15 " x 3 "	1245C - 321	R700321	R40H521	R40H9237	R40H3502	R40H3503
Split System									
F090, F120	Fa	WG	15 " x 3 "	1245C - 321	R700321	R40H521	R40H9237	R40H3502	R40H3503
	Fa	WG	15 " x 3 "	1245C - 321	R700321	R40H521	R40H9237	R40H3502	R40H3503
	Fa	WG	15 " x 3 "	1245C - 321	R700321	R40H521	R40H9237	R40H3502	R40H3503
	Fa	WG	15 " x 3 "	1245C - 321	R700321	R40H521	R40H9237	R40H3502	R40H3503
1972									
F050, F055, F060	Fa	KH	14 " x 2-1/2 "	2060 - 361	Discontinued	R40H596	R40H9219	R40H3536	R40H3537
	Fa	KH	14 " x 2-1/2 "	2060 - 361	Discontinued	R40H596	R40H9219	R40H3536	R40H3537
F070	Fd	DN		7141 - D224	MD224[340]	69310693	60050153	NR	NR
F080, F090	Fd	DN		7149 - D236	MD236[341]	69310693	R40H5523	NR	NR
	Fd	DN		7149 - D236	MD236[341]	69310693	R40H5523	NR	NR
R170, R175	Ra	KH	15 " x 5 "	4646 - 400	R700400	R40H595	R40H9220	R40H3538	R40H3539
	Ra	KH	15 " x 5 "	4646 - 400	R700400	R40H595	R40H9220	R40H3538	R40H3539
	Ra	KH	15 " x 5 "	4646 - 400	R700400	R40H595	R40H9220	R40H3538	R40H3539
	Ra	WG	15 " x 5 "	1252 - 346	R700346	R40H597	R40H9200	R40H3540	R40H3541
	Ra	WG	15 " x 5 "	1252 - 346	R700346	R40H597	R40H9200	R40H3540	R40H3541
R185	Ra	WG	15 " x 6 "	4596 - 381	R700381	R40H597	R40H9200	R40H3540	R40H3541
	Ra	WG	15 " x 6 "	4596 - 381	R700381	R40H597	R40H9200	R40H3540	R40H3541
	Ra	WG	15 " x 7 "	4597 - 383	R700383	R40H597	R40H9200	R40H3540	R40H3541
	Ra	WG	15 " x 7 "	4597 - 383	R700383	R40H597	R40H9200	R40H3540	R40H3541
Single System									
F070	Fa	WG	15 " x 3 "	1245C - 321	R700321	R40H521	R40H9237	R40H3502	R40H3503
	Fa	WG	15 " x 3 "	1245C - 321	R700321	R40H521	R40H9237	R40H3502	R40H3503
	Fa	WG	15 " x 3 "	1245C - 321	R700321	R40H521	R40H9237	R40H3502	R40H3503
	Fa	WG	15 " x 3 "	1245C - 321	R700321	R40H521	R40H9237	R40H3502	R40H3503
Split System									
F070	Fa	WG	15 " x 3 "	1245C - 321	R700321	R40H521	R40H9237	R40H3502	R40H3503
	Fa	WG	15 " x 3 "	1245C - 321	R700321	R40H521	R40H9237	R40H3502	R40H3503
	Fa	WG	15 " x 3 "	1245C - 321	R700321	R40H521	R40H9237	R40H3502	R40H3503
	Fa	WG	15 " x 3 "	1245C - 321	R700321	R40H521	R40H9237	R40H3502	R40H3503
Split System									
F090, F120	Fa	WG	15 " x 3 "	1245C - 321	R700321	R40H521	R40H9237	R40H3502	R40H3503
	Fa	WG	15 " x 3 "	1245C - 321	R700321	R40H521	R40H9237	R40H3502	R40H3503
	Fa	WG	15 " x 3 "	1245C - 321	R700321	R40H521	R40H9237	R40H3502	R40H3503
	Fa	WG	15 " x 3 "	1245C - 321	R700321	R40H521	R40H9237	R40H3502	R40H3503
1971									
F050, F055, F060	Fa	KH	14 " x 2-1/2 "	2060 - 361	Discontinued	R40H596	R40H9219	R40H3536	R40H3537

9 - 6 Stud, Dayton Rotor, Hat Style
42 - 6 Stud, Dayton Rotor, "U" Style
341 - Use 69160445 for Disc Pad Retainer Clip
37 - Also available as a New unit
186 - 10 Stud
358 - Split System
41 - Aluminum piston
340 - Use 69160457 for Disc Pad Retainer Clip

MERITOR DRUM OR ROTOR NO.	CALIPER OR CYLINDER BORE SIZE	MERITOR CALIPER OR WHEEL CYLINDER (LEFT)	MERITOR CALIPER OR WHEEL CYLINDER (RIGHT)	MERITOR CALIPER OR WHEEL CYLINDER REPAIR KIT	MERITOR CALIPER PISTON	MERITOR MASTER CYLINDER	MERITOR MASTER CYLINDER KIT	MERITOR BRAKE HOSE (LEFT)	MERITOR BRAKE HOSE (RIGHT)
									FORD(Cont.)
LN700 SERIES: LOUISVILLE 94.4 BBC SHORT CONVENTIONAL CHASSIS CAB(Cont.)									
-	1-1/4 "	R4133581	R4133582	R4166923	NR	-	-	-	-
-	1-1/4 "	R4133581	R4133581	R4166923	NR	-	-	-	-
-	1-1/4 "	R4133720	R4133721	R4166923	NR	-	-	-	-
-	1.09375	R4133484	R4133485	R4166819	NR	-	-	-	-
-	1.09375	R4133484	R4133485	R4166819	NR	-	-	-	-
23-122700-002[9]	2-1/2 "	R424244X	R424244X[37]	60050266	69270757[41]	-	-	-	-
23-122691-002[42]	2-7/8 "	60050145X	60050145X[37]	60050146	69270702[41]	-	-	-	-
23-122703-002[186]	2-7/8 "	60050145X	60050145X[37]	60050146	69270702[41]	-	-	-	-
-	1-1/2 "	R4033607	R4033607	R4166818	NR	-	-	-	-
-	1-1/2 "	R4033607	R4033607	R4166818	NR	-	-	-	-
-	1-5/8 "	R4133606	R4133606	R415193	NR	-	-	-	-
-	1-5/8 "	R4133338	R4133338	R4166689	NR	-	-	-	-
-	1-5/8 "	R4133338	R4133338	R4166689	NR	-	-	-	-
-	1-5/8 "	R4133338	R4133338	R4166689	NR	-	-	-	-
-	1-5/8 "	R4133338	R4133338	R4166689	NR	-	-	-	-
-	1-3/4 "	R4133400	R4133400	R4166917	NR	-	-	-	-
-	1-3/4 "	R4133400	R4133400	R4166917	NR	-	-	-	-
-	1-1/8 "	R4133716	R4133717	R4166926	NR	-	-	-	-
-	1-1/8 "	R4133714	R4133715	R4166926	NR	-	-	-	-
-	1-1/8 "	R4133714	R4133715	R4166926	NR	-	-	-	-
-	1-1/8 "	R4133716	R4133717	R4166926	NR	-	-	-	-
-	1-1/8 "	R4133719	R4133718	R4166926	NR	N/A[358]	R4122688	-	-
-	1-1/8 "	R4133714	R4133715	R4166926	NR	N/A[358]	R4122688	-	-
-	1-1/8 "	R4133714	R4133715	R4166926	NR	N/A[358]	R4122688	-	-
-	1-1/8 "	R4133719	R4133718	R4166926	NR	N/A[358]	R4122688	-	-
-	1-1/4 "	R4133720	R4133721	R4166923	NR	-	-	-	-
-	1-1/4 "	R4133581	R4133581	R4166923	NR	-	-	-	-
-	1-1/4 "	R4133581	R4133582	R4166923	NR	-	-	-	-
-	1-1/4 "	R4133720	R4133721	R4166923	NR	-	-	-	-
-	1.09375	R4133484	R4133485	R4166819	NR	-	-	-	-
-	1.09375	R4133484	R4133485	R4166819	NR	-	-	-	-
23-122700-002[9]	2-1/2 "	R424244X	R424244X[37]	60050266	69270757[41]	-	-	-	-
23-122691-002[42]	2-7/8 "	60050145X	60050145X[37]	60050146	69270702[41]	-	-	-	-
23-122703-002[186]	2-7/8 "	60050145X	60050145X[37]	60050146	69270702[41]	-	-	-	-
-	1-1/2 "	R4033607	R4033607	R4166818	NR	-	-	-	-
-	1-5/8 "	R4133606	R4133606	R415193	NR	-	-	-	-
-	1-1/2 "	R4033607	R4033607	R4166818	NR	-	-	-	-
-	1-5/8 "	R4133338	R4133338	R4166689	NR	-	-	-	-
-	1-5/8 "	R4133338	R4133338	R4166689	NR	-	-	-	-
-	1-5/8 "	R4133338	R4133338	R4166689	NR	-	-	-	-
-	1-5/8 "	R4133338	R4133338	R4166689	NR	-	-	-	-
-	1-3/4 "	R4133400	R4133400	R4166917	NR	-	-	-	-
-	1-3/4 "	R4133400	R4133400	R4166917	NR	-	-	-	-
-	1-1/8 "	R4133714	R4133715	R4166926	NR	-	-	-	-
-	1-1/8 "	R4133716	R4133717	R4166926	NR	-	-	-	-
-	1-1/8 "	R4133714	R4133715	R4166926	NR	-	-	-	-
-	1-1/8 "	R4133716	R4133717	R4166926	NR	-	-	-	-
-	1-1/8 "	R4133719	R4133718	R4166926	NR	N/A[358]	R4122688	-	-
-	1-1/8 "	R4133714	R4133715	R4166926	NR	N/A[358]	R4122688	-	-
-	1-1/8 "	R4133719	R4133718	R4166926	NR	N/A[358]	R4122688	-	-
-	1-1/8 "	R4133714	R4133715	R4166926	NR	N/A[358]	R4122688	-	-
-	1-1/4 "	R4133720	R4133721	R4166923	NR	-	-	-	-
-	1-1/4 "	R4133581	R4133582	R4166923	NR	-	-	-	-
-	1-1/4 "	R4133581	R4133581	R4166923	NR	-	-	-	-
-	1-1/4 "	R4133720	R4133721	R4166923	NR	-	-	-	-
-	1.09375	R4133484	R4133485	R4166819	NR	-	-	-	-

MAKE MODEL YEAR AXLE CODE AXLE WEIGHT	AXLE & BRK. TYPE	BRK. MFG.	BRAKE SIZE	FMSI	MERITOR DISC PAD OR BRAKE SHOE	MERITOR GUIDE PIN OR RETURN SPRING KIT	MERITOR CALIPER HWD. KIT OR RETURN SPRING KIT	MERITOR ADJUSTER KIT (LEFT WHEEL)	MERITOR ADJUSTER KIT (RIGHT WHEEL)
FORD(Cont.)									
LN700 SERIES: LOUISVILLE 94.4 BBC SHORT CONVENTIONAL CHASSIS CAB(Cont.)									
1971									
	Fa	KH	14 " x 2-1/2 "	2060 - 361	Discontinued	R40H596	R40H9219	R40H3536	R40H3537
F070	Fd	DN		7141 - D224	MD224[340]	69310693	60050153	NR	NR
F080, F090	Fd	DN		7149 - D236	MD236[341]	69310693	R40H5523	NR	NR
	Fd	DN		7149 - D236	MD236[341]	69310693	R40H5523	NR	NR
R170, R175	Ra	KH	15 " x 5 "	4646 - 400	R700400	R40H595	R40H9220	R40H3538	R40H3539
	Ra	KH	15 " x 5 "	4646 - 400	R700400	R40H595	R40H9220	R40H3538	R40H3539
	Ra	KH	15 " x 5 "	4646 - 400	R700400	R40H595	R40H9220	R40H3538	R40H3539
	Ra	WG	15 " x 5 "	1252 - 346	R700346	R40H597	R40H9200	R40H3540	R40H3541
	Ra	WG	15 " x 5 "	1252 - 346	R700346	R40H597	R40H9200	R40H3540	R40H3541
R185	Ra	WG	15 " x 6 "	4596 - 381	R700381	R40H597	R40H9200	R40H3540	R40H3541
	Ra	WG	15 " x 6 "	4596 - 381	R700381	R40H597	R40H9200	R40H3540	R40H3541
	Ra	WG	15 " x 7 "	4597 - 383	R700383	R40H597	R40H9200	R40H3540	R40H3541
	Ra	WG	15 " x 7 "	4597 - 383	R700383	R40H597	R40H9200	R40H3540	R40H3541
Single System									
F070	Fa	WG	15 " x 3 "	1245C - 321	R700321	R40H521	R40H9237	R40H3502	R40H3503
	Fa	WG	15 " x 3 "	1245C - 321	R700321	R40H521	R40H9237	R40H3502	R40H3503
	Fa	WG	15 " x 3 "	1245C - 321	R700321	R40H521	R40H9237	R40H3502	R40H3503
	Fa	WG	15 " x 3 "	1245C - 321	R700321	R40H521	R40H9237	R40H3502	R40H3503
Split System									
F070	Fa	WG	15 " x 3 "	1245C - 321	R700321	R40H521	R40H9237	R40H3502	R40H3503
	Fa	WG	15 " x 3 "	1245C - 321	R700321	R40H521	R40H9237	R40H3502	R40H3503
	Fa	WG	15 " x 3 "	1245C - 321	R700321	R40H521	R40H9237	R40H3502	R40H3503
	Fa	WG	15 " x 3 "	1245C - 321	R700321	R40H521	R40H9237	R40H3502	R40H3503
Split System									
F090, F120	Fa	WG	15 " x 3 "	1245C - 321	R700321	R40H521	R40H9237	R40H3502	R40H3503
	Fa	WG	15 " x 3 "	1245C - 321	R700321	R40H521	R40H9237	R40H3502	R40H3503
	Fa	WG	15 " x 3 "	1245C - 321	R700321	R40H521	R40H9237	R40H3502	R40H3503
	Fa	WG	15 " x 3 "	1245C - 321	R700321	R40H521	R40H9237	R40H3502	R40H3503
1970									
F050, F055, F060	Fa	KH	14 " x 2-1/2 "	2060 - 361	Discontinued	R40H596	R40H9219	R40H3536	R40H3537
	Fa	KH	14 " x 2-1/2 "	2060 - 361	Discontinued	R40H596	R40H9219	R40H3536	R40H3537
F070	Fd	DN		7141 - D224	MD224[340]	69310693	60050153	NR	NR
F080, F090	Fd	DN		7149 - D236	MD236[341]	69310693	R40H5523	NR	NR
	Fd	DN		7149 - D236	MD236[341]	69310693	R40H5523	NR	NR
R170, R175	Ra	KH	15 " x 5 "	4646 - 400	R700400	R40H595	R40H9220	R40H3538	R40H3539
	Ra	KH	15 " x 5 "	4646 - 400	R700400	R40H595	R40H9220	R40H3538	R40H3539
	Ra	KH	15 " x 5 "	4646 - 400	R700400	R40H595	R40H9220	R40H3538	R40H3539
	Ra	WG	15 " x 5 "	1252 - 346	R700346	R40H597	R40H9200	R40H3540	R40H3541
	Ra	WG	15 " x 5 "	1252 - 346	R700346	R40H597	R40H9200	R40H3540	R40H3541
R185	Ra	WG	15 " x 6 "	4596 - 381	R700381	R40H597	R40H9200	R40H3540	R40H3541
	Ra	WG	15 " x 6 "	4596 - 381	R700381	R40H597	R40H9200	R40H3540	R40H3541
	Ra	WG	15 " x 7 "	4597 - 383	R700383	R40H597	R40H9200	R40H3540	R40H3541
	Ra	WG	15 " x 7 "	4597 - 383	R700383	R40H597	R40H9200	R40H3540	R40H3541
Single System									
F070	Fa	WG	15 " x 3 "	1245C - 321	R700321	R40H521	R40H9237	R40H3502	R40H3503
	Fa	WG	15 " x 3 "	1245C - 321	R700321	R40H521	R40H9237	R40H3502	R40H3503
	Fa	WG	15 " x 3 "	1245C - 321	R700321	R40H521	R40H9237	R40H3502	R40H3503
	Fa	WG	15 " x 3 "	1245C - 321	R700321	R40H521	R40H9237	R40H3502	R40H3503
Split System									
F070	Fa	WG	15 " x 3 "	1245C - 321	R700321	R40H521	R40H9237	R40H3502	R40H3503
	Fa	WG	15 " x 3 "	1245C - 321	R700321	R40H521	R40H9237	R40H3502	R40H3503
	Fa	WG	15 " x 3 "	1245C - 321	R700321	R40H521	R40H9237	R40H3502	R40H3503
	Fa	WG	15 " x 3 "	1245C - 321	R700321	R40H521	R40H9237	R40H3502	R40H3503
Split System									
F090, F120	Fa	WG	15 " x 3 "	1245C - 321	R700321	R40H521	R40H9237	R40H3502	R40H3503
	Fa	WG	15 " x 3 "	1245C - 321	R700321	R40H521	R40H9237	R40H3502	R40H3503
	Fa	WG	15 " x 3 "	1245C - 321	R700321	R40H521	R40H9237	R40H3502	R40H3503
	Fa	WG	15 " x 3 "	1245C - 321	R700321	R40H521	R40H9237	R40H3502	R40H3503
1969									
F050, F055, F060	Fa	KH	14 " x 2-1/2 "	2060 - 361	Discontinued	R40H596	R40H9219	R40H3536	R40H3537
	Fa	KH	14 " x 2-1/2 "	2060 - 361	Discontinued	R40H596	R40H9219	R40H3536	R40H3537
F070	Fd	DN		7141 - D224	MD224[340]	69310693	60050153	NR	NR
F080, F090	Fd	DN		7149 - D236	MD236[341]	69310693	R40H5523	NR	NR
	Fd	DN		7149 - D236	MD236[341]	69310693	R40H5523	NR	NR

9 - 6 Stud, Dayton Rotor, Hat Style
42 - 6 Stud, Dayton Rotor, "U" Style
341 - Use 69160445 for Disc Pad Retainer Clip
37 - Also available as a New unit
186 - 10 Stud
358 - Split System
41 - Aluminum piston
340 - Use 69160457 for Disc Pad Retainer Clip

MERITOR DRUM OR ROTOR NO.	CALIPER OR CYLINDER BORE SIZE	MERITOR CALIPER OR WHEEL CYLINDER (LEFT)	MERITOR CALIPER OR WHEEL CYLINDER (RIGHT)	MERITOR CALIPER OR WHEEL CYLINDER REPAIR KIT	MERITOR CALIPER PISTON	MERITOR MASTER CYLINDER	MERITOR MASTER CYLINDER KIT	MERITOR BRAKE HOSE (LEFT)	MERITOR BRAKE HOSE (RIGHT)
FORD(Cont.)									
LN700 SERIES: LOUISVILLE 94.4 BBC SHORT CONVENTIONAL CHASSIS CAB(Cont.)									
-	1.09375	R4133484	R4133485	R4166819	NR	-	-	-	-
23-122700-002[9]	2-1/2 "	R424244X	R424244X[37]	60050266	69270757[41]	-	-	-	-
23-122703-002[186]	2-7/8 "	60050145X	60050145X[37]	60050146	69270702[41]	-	-	-	-
23-122691-002[42]	2-7/8 "	60050145X	60050145X[37]	60050146	69270702[41]	-	-	-	-
-	1-5/8 "	R4133606	R4133606	R415193	NR	-	-	-	-
-	1-1/2 "	R4033607	R4033607	R4166818	NR	-	-	-	-
-	1-1/2 "	R4033607	R4033607	R4166818	NR	-	-	-	-
-	1-5/8 "	R4133338	R4133338	R4166689	NR	-	-	-	-
-	1-5/8 "	R4133338	R4133338	R4166689	NR	-	-	-	-
-	1-5/8 "	R4133338	R4133338	R4166689	NR	-	-	-	-
-	1-5/8 "	R4133338	R4133338	R4166689	NR	-	-	-	-
-	1-3/4 "	R4133400	R4133400	R4166917	NR	-	-	-	-
-	1-3/4 "	R4133400	R4133400	R4166917	NR	-	-	-	-
-	1-1/8 "	R4133714	R4133715	R4166926	NR	-	-	-	-
-	1-1/8 "	R4133716	R4133717	R4166926	NR	-	-	-	-
-	1-1/8 "	R4133714	R4133715	R4166926	NR	-	-	-	-
-	1-1/8 "	R4133716	R4133717	R4166926	NR	-	-	-	-
-	1-1/8 "	R4133719	R4133718	R4166926	NR	N/A[358]	R4122688	-	-
-	1-1/8 "	R4133714	R4133715	R4166926	NR	N/A[358]	R4122688	-	-
-	1-1/8 "	R4133714	R4133715	R4166926	NR	N/A[358]	R4122688	-	-
-	1-1/8 "	R4133719	R4133718	R4166926	NR	N/A[358]	R4122688	-	-
-	1-1/4 "	R4133720	R4133721	R4166923	NR	-	-	-	-
-	1-1/4 "	R4133581	R4133581	R4166923	NR	-	-	-	-
-	1-1/4 "	R4133581	R4133582	R4166923	NR	-	-	-	-
-	1-1/4 "	R4133720	R4133721	R4166923	NR	-	-	-	-
-	1.09375	R4133484	R4133485	R4166819	NR	-	-	-	-
-	1.09375	R4133484	R4133485	R4166819	NR	-	-	-	-
23-122700-002[9]	2-1/2 "	R424244X	R424244X[37]	60050266	69270757[41]	-	-	-	-
23-122703-002[186]	2-7/8 "	60050145X	60050145X[37]	60050146	69270702[41]	-	-	-	-
23-122691-002[42]	2-7/8 "	60050145X	60050145X[37]	60050146	69270702[41]	-	-	-	-
-	1-1/2 "	R4033607	R4033607	R4166818	NR	-	-	-	-
-	1-5/8 "	R4133606	R4133606	R415193	NR	-	-	-	-
-	1-1/2 "	R4033607	R4033607	R4166818	NR	-	-	-	-
-	1-5/8 "	R4133338	R4133338	R4166689	NR	-	-	-	-
-	1-5/8 "	R4133338	R4133338	R4166689	NR	-	-	-	-
-	1-5/8 "	R4133338	R4133338	R4166689	NR	-	-	-	-
-	1-5/8 "	R4133338	R4133338	R4166689	NR	-	-	-	-
-	1-3/4 "	R4133400	R4133400	R4166917	NR	-	-	-	-
-	1-3/4 "	R4133400	R4133400	R4166917	NR	-	-	-	-
-	1-1/8 "	R4133716	R4133717	R4166926	NR	-	-	-	-
-	1-1/8 "	R4133714	R4133715	R4166926	NR	-	-	-	-
-	1-1/8 "	R4133716	R4133717	R4166926	NR	-	-	-	-
-	1-1/8 "	R4133714	R4133715	R4166926	NR	-	-	-	-
-	1-1/8 "	R4133714	R4133715	R4166926	NR	N/A[358]	R4122688	-	-
-	1-1/8 "	R4133719	R4133718	R4166926	NR	N/A[358]	R4122688	-	-
-	1-1/8 "	R4133719	R4133718	R4166926	NR	N/A[358]	R4122688	-	-
-	1-1/8 "	R4133714	R4133715	R4166926	NR	N/A[358]	R4122688	-	-
-	1-1/4 "	R4133581	R4133582	R4166923	NR	-	-	-	-
-	1-1/4 "	R4133581	R4133581	R4166923	NR	-	-	-	-
-	1-1/4 "	R4133720	R4133721	R4166923	NR	-	-	-	-
-	1-1/4 "	R4133720	R4133721	R4166923	NR	-	-	-	-
-	1.09375	R4133484	R4133485	R4166819	NR	-	-	-	-
-	1.09375	R4133484	R4133485	R4166819	NR	-	-	-	-
23-122700-002[9]	2-1/2 "	R424244X	R424244X[37]	60050266	69270757[41]	-	-	-	-
23-122703-002[186]	2-7/8 "	60050145X	60050145X[37]	60050146	69270702[41]	-	-	-	-
23-122691-002[42]	2-7/8 "	60050145X	60050145X[37]	60050146	69270702[41]	-	-	-	-

MAKE MODEL YEAR AXLE CODE AXLE WEIGHT	AXLE & BRK. TYPE	BRK. MFG.	BRAKE SIZE	FMSI	MERITOR DISC PAD OR BRAKE SHOE	MERITOR GUIDE PIN OR RETURN SPRING KIT	MERITOR CALIPER HWD. KIT OR RETURN SPRING KIT	MERITOR ADJUSTER KIT (LEFT WHEEL)	MERITOR ADJUSTER KIT (RIGHT WHEEL)
FORD(Cont.)									
LN700 SERIES: LOUISVILLE 94.4 BBC SHORT CONVENTIONAL CHASSIS CAB(Cont.)									
1969									
R170, R175	Ra	KH	15 " x 5 "	4646 - 400	R700400	R40H595	R40H9220	R40H3538	R40H3539
	Ra	KH	15 " x 5 "	4646 - 400	R700400	R40H595	R40H9220	R40H3538	R40H3539
	Ra	KH	15 " x 5 "	4646 - 400	R700400	R40H595	R40H9220	R40H3538	R40H3539
	Ra	WG	15 " x 5 "	1252 - 346	R700346	R40H597	R40H9200	R40H3540	R40H3541
	Ra	WG	15 " x 5 "	1252 - 346	R700346	R40H597	R40H9200	R40H3540	R40H3541
R185	Ra	WG	15 " x 6 "	4596 - 381	R700381	R40H597	R40H9200	R40H3540	R40H3541
	Ra	WG	15 " x 6 "	4596 - 381	R700381	R40H597	R40H9200	R40H3540	R40H3541
	Ra	WG	15 " x 7 "	4597 - 383	R700383	R40H597	R40H9200	R40H3540	R40H3541
	Ra	WG	15 " x 7 "	4597 - 383	R700383	R40H597	R40H9200	R40H3540	R40H3541
Single System									
F070	Fa	WG	15 " x 3 "	1245C - 321	R700321	R40H521	R40H9237	R40H3502	R40H3503
	Fa	WG	15 " x 3 "	1245C - 321	R700321	R40H521	R40H9237	R40H3502	R40H3503
	Fa	WG	15 " x 3 "	1245C - 321	R700321	R40H521	R40H9237	R40H3502	R40H3503
	Fa	WG	15 " x 3 "	1245C - 321	R700321	R40H521	R40H9237	R40H3502	R40H3503
Split System									
F070	Fa	WG	15 " x 3 "	1245C - 321	R700321	R40H521	R40H9237	R40H3502	R40H3503
	Fa	WG	15 " x 3 "	1245C - 321	R700321	R40H521	R40H9237	R40H3502	R40H3503
	Fa	WG	15 " x 3 "	1245C - 321	R700321	R40H521	R40H9237	R40H3502	R40H3503
	Fa	WG	15 " x 3 "	1245C - 321	R700321	R40H521	R40H9237	R40H3502	R40H3503
Split System									
F090, F120	Fa	WG	15 " x 3 "	1245C - 321	R700321	R40H521	R40H9237	R40H3502	R40H3503
	Fa	WG	15 " x 3 "	1245C - 321	R700321	R40H521	R40H9237	R40H3502	R40H3503
	Fa	WG	15 " x 3 "	1245C - 321	R700321	R40H521	R40H9237	R40H3502	R40H3503
	Fa	WG	15 " x 3 "	1245C - 321	R700321	R40H521	R40H9237	R40H3502	R40H3503
1968									
F050, F055, F060	Fa	KH	14 " x 2-1/2 "	2060 - 361	Discontinued	R40H596	R40H9219	R40H3536	R40H3537
	Fa	KH	14 " x 2-1/2 "	2060 - 361	Discontinued	R40H596	R40H9219	R40H3536	R40H3537
F070	Fd	DN		7141 - D224	MD224[340]	69310693	60050153	NR	NR
F080, F090	Fd	DN		7149 - D236	MD236[341]	69310693	R40H5523	NR	NR
	Fd	DN		7149 - D236	MD236[341]	69310693	R40H5523	NR	NR
R170, R175	Ra	KH	15 " x 5 "	4646 - 400	R700400	R40H595	R40H9220	R40H3538	R40H3539
	Ra	KH	15 " x 5 "	4646 - 400	R700400	R40H595	R40H9220	R40H3538	R40H3539
	Ra	KH	15 " x 5 "	4646 - 400	R700400	R40H595	R40H9220	R40H3538	R40H3539
	Ra	WG	15 " x 5 "	1252 - 346	R700346	R40H597	R40H9200	R40H3540	R40H3541
	Ra	WG	15 " x 5 "	1252 - 346	R700346	R40H597	R40H9200	R40H3540	R40H3541
R185	Ra	WG	15 " x 6 "	4596 - 381	R700381	R40H597	R40H9200	R40H3540	R40H3541
	Ra	WG	15 " x 6 "	4596 - 381	R700381	R40H597	R40H9200	R40H3540	R40H3541
	Ra	WG	15 " x 7 "	4597 - 383	R700383	R40H597	R40H9200	R40H3540	R40H3541
	Ra	WG	15 " x 7 "	4597 - 383	R700383	R40H597	R40H9200	R40H3540	R40H3541
Single System									
F070	Fa	WG	15 " x 3 "	1245C - 321	R700321	R40H521	R40H9237	R40H3502	R40H3503
	Fa	WG	15 " x 3 "	1245C - 321	R700321	R40H521	R40H9237	R40H3502	R40H3503
	Fa	WG	15 " x 3 "	1245C - 321	R700321	R40H521	R40H9237	R40H3502	R40H3503
	Fa	WG	15 " x 3 "	1245C - 321	R700321	R40H521	R40H9237	R40H3502	R40H3503
Split System									
F070	Fa	WG	15 " x 3 "	1245C - 321	R700321	R40H521	R40H9237	R40H3502	R40H3503
	Fa	WG	15 " x 3 "	1245C - 321	R700321	R40H521	R40H9237	R40H3502	R40H3503
	Fa	WG	15 " x 3 "	1245C - 321	R700321	R40H521	R40H9237	R40H3502	R40H3503
	Fa	WG	15 " x 3 "	1245C - 321	R700321	R40H521	R40H9237	R40H3502	R40H3503
Split System									
F090, F120	Fa	WG	15 " x 3 "	1245C - 321	R700321	R40H521	R40H9237	R40H3502	R40H3503
	Fa	WG	15 " x 3 "	1245C - 321	R700321	R40H521	R40H9237	R40H3502	R40H3503
	Fa	WG	15 " x 3 "	1245C - 321	R700321	R40H521	R40H9237	R40H3502	R40H3503
	Fa	WG	15 " x 3 "	1245C - 321	R700321	R40H521	R40H9237	R40H3502	R40H3503
LN800 SERIES: LOUISVILLE 94.4 BBC SHORT CONVENTIONAL CHASSIS CAB									
1992									
	Fd	DN		7149 - D236	MD236[341]	69310693	69310782	NR	NR
	Fd	DN		7141 - D224	MD224[340]	69310693	60050153	NR	NR
	Fd	DN		7149 - D236	MD236[341]	69310693	69310782	NR	NR
	Fd	DN		7149 - D236	MD236[341]	69310693	69310782	NR	NR
	Ra	LG	15 " x 7 "	4505A - 544	N/A	R40H618	NR	NR	NR
	Ra	LG	15 " x 7 "	4505A - 544	N/A	R40H618	NR	SP7887S	SP7887S
1991									
	Fd	DN		7149 - D236	MD236[341]	69310693	69310782	NR	NR

9 - 6 Stud, Dayton Rotor, Hat Style
42 - 6 Stud, Dayton Rotor, "U" Style
187 - 6 Stud, 6.443" Hub

37 - Also available as a New unit
53 - Power Brakes
188 - 6 Stud, 9.251" Hub

41 - Aluminum piston
186 - 10 Stud
204 - Right Hand; use E-4057 for Left Hand Expander Kits

MERITOR DRUM OR ROTOR NO.	CALIPER OR CYLINDER BORE SIZE	MERITOR CALIPER OR WHEEL CYLINDER (LEFT)	MERITOR CALIPER OR WHEEL CYLINDER (RIGHT)	MERITOR CALIPER OR WHEEL CYLINDER REPAIR KIT	MERITOR CALIPER PISTON	MERITOR MASTER CYLINDER	MERITOR MASTER CYLINDER KIT	MERITOR BRAKE HOSE (LEFT)	MERITOR BRAKE HOSE (RIGHT)
									FORD(Cont.)
LN700 SERIES: LOUISVILLE 94.4 BBC SHORT CONVENTIONAL CHASSIS CAB(Cont.)									
-	1-5/8 "	R4133606	R4133606	R415193	NR	-	-	-	-
-	1-1/2 "	R4033607	R4033607	R4166818	NR	-	-	-	-
-	1-1/2 "	R4033607	R4033607	R4166818	NR	-	-	-	-
-	1-5/8 "	R4133338	R4133338	R4166689	NR	-	-	-	-
-	1-5/8 "	R4133338	R4133338	R4166689	NR	-	-	-	-
-	1-5/8 "	R4133338	R4133338	R4166689	NR	-	-	-	-
-	1-5/8 "	R4133338	R4133338	R4166689	NR	-	-	-	-
-	1-3/4 "	R4133400	R4133400	R4166917	NR	-	-	-	-
-	1-3/4 "	R4133400	R4133400	R4166917	NR	-	-	-	-
-	1-1/8 "	R4133716	R4133717	R4166926	NR	-	-	-	-
-	1-1/8 "	R4133714	R4133715	R4166926	NR	-	-	-	-
-	1-1/8 "	R4133716	R4133717	R4166926	NR	-	-	-	-
-	1-1/8 "	R4133714	R4133715	R4166926	NR	-	-	-	-
-	1-1/8 "	R4133719	R4133718	R4166926	NR	N/A[358]	R4122688	-	-
-	1-1/8 "	R4133714	R4133715	R4166926	NR	N/A[358]	R4122688	-	-
-	1-1/8 "	R4133719	R4133718	R4166926	NR	N/A[358]	R4122688	-	-
-	1-1/8 "	R4133714	R4133715	R4166926	NR	N/A[358]	R4122688	-	-
-	1-1/4 "	R4133720	R4133721	R4166923	NR	-	-	-	-
-	1-1/4 "	R4133581	R4133582	R4166923	NR	-	-	-	-
-	1-1/4 "	R4133720	R4133721	R4166923	NR	-	-	-	-
-	1-1/4 "	R4133581	R4133581	R4166923	NR	-	-	-	-
-	1.09375	R4133484	R4133485	R4166819	NR	-	-	-	-
-	1.09375	R4133484	R4133485	R4166819	NR	-	-	-	-
23-122700-002[9]	2-1/2 "	R424244X	R424244X[37]	60050266	69270757[41]	-	-	-	-
23-122691-002[42]	2-7/8 "	60050145X	60050145X[37]	60050146	69270702[41]	-	-	-	-
23-122703-002[186]	2-7/8 "	60050145X	60050145X[37]	60050146	69270702[41]	-	-	-	-
-	1-1/2 "	R4033607	R4033607	R4166818	NR	-	-	-	-
-	1-1/2 "	R4033607	R4033607	R4166818	NR	-	-	-	-
-	1-5/8 "	R4133606	R4133606	R415193	NR	-	-	-	-
-	1-5/8 "	R4133338	R4133338	R4166689	NR	-	-	-	-
-	1-5/8 "	R4133338	R4133338	R4166689	NR	-	-	-	-
-	1-5/8 "	R4133338	R4133338	R4166689	NR	-	-	-	-
-	1-5/8 "	R4133338	R4133338	R4166689	NR	-	-	-	-
-	1-3/4 "	R4133400	R4133400	R4166917	NR	-	-	-	-
-	1-3/4 "	R4133400	R4133400	R4166917	NR	-	-	-	-
-	1-1/8 "	R4133714	R4133715	R4166926	NR	-	-	-	-
-	1-1/8 "	R4133716	R4133717	R4166926	NR	-	-	-	-
-	1-1/8 "	R4133716	R4133717	R4166926	NR	-	-	-	-
-	1-1/8 "	R4133714	R4133715	R4166926	NR	-	-	-	-
-	1-1/8 "	R4133714	R4133715	R4166926	NR	N/A[358]	R4122688	-	-
-	1-1/8 "	R4133719	R4133718	R4166926	NR	N/A[358]	R4122688	-	-
-	1-1/8 "	R4133719	R4133718	R4166926	NR	N/A[358]	R4122688	-	-
-	1-1/8 "	R4133714	R4133715	R4166926	NR	N/A[358]	R4122688	-	-
-	1-1/4 "	R4133581	R4133581	R4166923	NR	-	-	-	-
-	1-1/4 "	R4133720	R4133721	R4166923	NR	-	-	-	-
-	1-1/4 "	R4133581	R4133582	R4166923	NR	-	-	-	-
-	1-1/4 "	R4133720	R4133721	R4166923	NR	-	-	-	-
LN800 SERIES: LOUISVILLE 94.4 BBC SHORT CONVENTIONAL CHASSIS CAB									
23-122691-002[188]	2-7/8 "	60050145X	60050145X[37]	60050146	69270702[41]	R4111995[53]	-	R4577454	R4577455
23-122700-002[9]	2-1/2 "	R424244X	R424244X[37]	60050266	69270757[41]	R4111995[53]	-	R4577454	R4577455
23-122703-002[186]	2-7/8 "	60050145X	60050145X[37]	60050146	69270702[41]	R4111995[53]	-	R4577454	R4577455
23-122743-002[187]	2-7/8 "	60050145X	60050145X[37]	60050146	69270702[41]	R4111995[53]	-	R4577454	R4577455
N/A	1-3/4 "	201179X	201180X	SP7873S	SP7880S[204]	-	-	R4577870	R4577870
N/A	1-3/4 "	201183X	201184X[329]	SP7873S	NR	-	-	R4577870	R4577870
23-122743-002[187]	2-7/8 "	60050145X	60050145X[37]	60050146	69270702[41]	R4111995[53]	-	R4577454	R4577455

329 - Forward
340 - Use 69160457 for Disc Pad Retainer Clip
341 - Use 69160445 for Disc Pad Retainer Clip
358 - Split System

MAKE MODEL YEAR AXLE CODE AXLE WEIGHT	AXLE & BRK. TYPE	BRK. MFG.	BRAKE SIZE	FMSI	MERITOR DISC PAD OR BRAKE SHOE	MERITOR GUIDE PIN OR RETURN SPRING KIT	MERITOR CALIPER HWD. KIT OR RETURN SPRING KIT	MERITOR ADJUSTER KIT (LEFT WHEEL)	MERITOR ADJUSTER KIT (RIGHT WHEEL)
FORD(Cont.)									
LN800 SERIES: LOUISVILLE 94.4 BBC SHORT CONVENTIONAL CHASSIS CAB(Cont.)									
1991									
	Fd	DN		7141 - D224	MD224[340]	69310693	60050153	NR	NR
	Fd	DN		7149 - D236	MD236[341]	69310693	69310782	NR	NR
	Fd	DN		7149 - D236	MD236[341]	69310693	69310782	NR	NR
	Ra	LG	15 " x 7 "	4505A - 544	N/A	R40H618	NR	SP7887S	SP7887S
	Ra	LG	15 " x 7 "	4505A - 544	N/A	R40H618	NR	NR	NR
1990									
	Fd	DN		7141 - D224	MD224[340]	69310693	60050153	NR	NR
	Fd	DN		7149 - D236	MD236[341]	69310693	69310782	NR	NR
	Fd	DN		7149 - D236	MD236[341]	69310693	69310782	NR	NR
	Fd	DN		7149 - D236	MD236[341]	69310693	69310782	NR	NR
	Ra	LG	15 " x 7 "	4505A - 544	N/A	R40H618	NR	SP7887S	SP7887S
	Ra	LG	15 " x 7 "	4505A - 544	N/A	R40H618	NR	NR	NR
1989									
	Fd	DN		7149 - D236	MD236[341]	69310693	69310782[43]	NR	NR
	Fd	DN		7149 - D236	MD236[341]	69310693	69310782[43]	NR	NR
	Fd	DN		7141 - D224	MD224[340]	69310693	60050153	NR	NR
	Fd	DN		7149 - D236	MD236[341]	69310693	69310782[43]	NR	NR
	Ra	LG	15 " x 7 "	4505A - 544	N/A	R40H618	NR	NR	NR
	Ra	LG	15 " x 7 "	4505A - 544	N/A	R40H618	NR	SP7887S	SP7887S
1988									
	Fd	DN		7149 - D236	MD236[341]	69310693	69310782[43]	NR	NR
	Fd	DN		7141 - D224	MD224[340]	69310693	60050153	NR	NR
	Fd	DN		7149 - D236	MD236[341]	69310693	69310782[43]	NR	NR
	Fd	DN		7149 - D236	MD236[341]	69310693	69310782[43]	NR	NR
	Ra	LG	15 " x 7 "	4505A - 544	N/A	R40H618	NR	SP7887S	SP7887S
	Ra	LG	15 " x 7 "	4505A - 544	N/A	R40H618	NR	NR	NR
1987									
	Fd	DN		7149 - D236	MD236[341]	69310693	69310782[43]	NR	NR
	Fd	DN		7141 - D224	MD224[340]	69310693	60050153	NR	NR
	Fd	DN		7149 - D236	MD236[341]	69310693	69310782[43]	NR	NR
	Fd	DN		7149 - D236	MD236[341]	69310693	69310782[43]	NR	NR
	Ra	LG	15 " x 7 "	4505A - 544	N/A	R40H618	NR	NR	NR
	Ra	LG	15 " x 7 "	4505A - 544	N/A	R40H618	NR	SP7887S	SP7887S
1986									
	Fd	DN		7149 - D236	MD236[341]	69310693	69310782	NR	NR
	Fd	DN		7149 - D236	MD236[341]	69310693	69310782	NR	NR
	Fd	DN		7141 - D224	MD224[340]	69310693	60050153	NR	NR
	Fd	DN		7149 - D236	MD236[341]	69310693	69310782	NR	NR
	Ra	LG	15 " x 7 "	4505A - 544	N/A	R40H618	NR	SP7887S	SP7887S
	Ra	LG	15 " x 7 "	4505A - 544	N/A	R40H618	NR	NR	NR
1985									
	Fd	DN		7141 - D224	MD224[340]	69310693	60050153	NR	NR
	Fd	DN		7149 - D236	MD236[341]	69310693	R40H5523	NR	NR
	Fd	DN		7149 - D236	MD236[341]	69310693	R40H5523	NR	NR
	Fd	DN		7149 - D236	MD236[341]	69310693	R40H5523	NR	NR
	Ra	LG	15 " x 7 "	4505A - 544	N/A	R40H618	NR	SP7887S	SP7887S
	Ra	LG	15 " x 7 "	4505A - 544	N/A	R40H618	NR	NR	NR
1984									
	Fd	DN		7149 - D236	MD236[341]	69310693	R40H5523	NR	NR
	Fd	DN		7141 - D224	MD224[340]	69310693	60050153	NR	NR
	Fd	DN		7149 - D236	MD236[341]	69310693	R40H5523	NR	NR
	Fd	DN		7149 - D236	MD236[341]	69310693	R40H5523	NR	NR
	Ra	LG	15 " x 7 "	4505A - 544	N/A	R40H618	NR	SP7887S	SP7887S
	Ra	LG	15 " x 7 "	4505A - 544	N/A	R40H618	NR	NR	NR
1983									
	Ra	LG	15 " x 6 "	4504A - 543	N/A	R40H618	NR	SP7888S	SP7888S
	Ra	LG	15 " x 6 "	4504A - 543	N/A	R40H618	NR	NR	NR
	Ra	LG	15 " x 7 "	4505A - 544	N/A	R40H618	NR	SP7888S	SP7888S
	Ra	LG	15 " x 7 "	4505A - 544	N/A	R40H618	NR	NR	NR
F050, F055, F060	Fa	KH	14 " x 2-1/2 "	2060 - 361	Discontinued	R40H596	R40H9219	R40H3536	R40H3537
F070	Fa	WG	15 " x 3 "	1245C - 321	R700321	R40H521	R40H9237	R40H3502	R40H3503
	Fa	WG	15 " x 3 "	1245C - 321	R700321	R40H521	R40H9237	R40H3502	R40H3503
	Fa	WG	15 " x 3 "	1245C - 321	R700321	R40H521	R40H9237	R40H3502	R40H3503
	Fa	WG	15 " x 3 "	1245C - 321	R700321	R40H521	R40H9237	R40H3502	R40H3503

9 - 6 Stud, Dayton Rotor, Hat Style
43 - For Applications Taking A Longer Shim, Use R404151706
187 - 6 Stud, 6.443" Hub
37 - Also available as a New unit
53 - Power Brakes
188 - 6 Stud, 9.251" Hub
41 - Aluminum piston
186 - 10 Stud
204 - Right Hand; use E-4057 for Left Hand Expander Kits

MERITOR DRUM OR ROTOR NO.	CALIPER OR CYLINDER BORE SIZE	MERITOR CALIPER OR WHEEL CYLINDER (LEFT)	MERITOR CALIPER OR WHEEL CYLINDER (RIGHT)	MERITOR CALIPER OR WHEEL CYLINDER REPAIR KIT	MERITOR CALIPER PISTON	MERITOR MASTER CYLINDER	MERITOR MASTER CYLINDER KIT	MERITOR BRAKE HOSE (LEFT)	MERITOR BRAKE HOSE (RIGHT)
									FORD(Cont.)
LN800 SERIES: LOUISVILLE 94.4 BBC SHORT CONVENTIONAL CHASSIS CAB(Cont.)									
23-122700-002[9]	2-1/2 "	R424244X	R424244X[37]	60050266	69270757[41]	R4111995[53]	-	R4577454	R4577455
23-122703-002[186]	2-7/8 "	60050145X	60050145X[37]	60050146	69270702[41]	R4111995[53]	-	R4577454	R4577455
23-122691-002[188]	2-7/8 "	60050145X	60050145X[37]	60050146	69270702[41]	R4111995[53]	-	R4577454	R4577455
N/A	1-3/4 "	201183X	201184X[329]	SP7873S	NR	-	-	R4577870	R4577870
N/A	1-3/4 "	201179X	201180X	SP7873S	SP7880S[204]	-	-	R4577870	R4577870
23-122700-002[9]	2-1/2 "	R424244X	R424244X[37]	60050266	69270757[41]	R4111995[53]	-	R4577454	R4577455
23-122691-002[188]	2-7/8 "	60050145X	60050145X[37]	60050146	69270702[41]	R4111995[53]	-	R4577454	R4577455
23-122703-002[186]	2-7/8 "	60050145X	60050145X[37]	60050146	69270702[41]	R4111995[53]	-	R4577454	R4577455
23-122743-002[187]	2-7/8 "	60050145X	60050145X[37]	60050146	69270702[41]	R4111995[53]	-	R4577454	R4577455
N/A	1-3/4 "	201183X	201184X[329]	SP7873S	NR	-	-	R4577870	R4577870
N/A	1-3/4 "	201179X	201180X	SP7873S	SP7880S[204]	-	-	R4577870	R4577870
23-122691-002[188]	2-7/8 "	60050145X	60050145X[37]	60050146	69270702[41]	R4111995[53]	-	R4577454	R4577455
23-122703-002[186]	2-7/8 "	60050145X	60050145X[37]	60050146	69270702[41]	R4111995[53]	-	R4577454	R4577455
23-122700-002[9]	2-1/2 "	R424244X	R424244X[37]	60050266	69270757[41]	R4111995[53]	-	R4577454	R4577455
23-122743-002[187]	2-7/8 "	60050145X	60050145X[37]	60050146	69270702[41]	R4111995[53]	-	R4577454	R4577455
N/A	1-3/4 "	201179X	201180X	SP7873S	SP7880S[204]	-	-	N/A	N/A
N/A	1-3/4 "	201183X	201184X[329]	SP7873S	NR	-	-	N/A	N/A
23-122703-002[186]	2-7/8 "	60050145X	60050145X[37]	60050146	69270702[41]	R4111995[53]	-	R4577454	R4577455
23-122700-002[9]	2-1/2 "	R424244X	R424244X[37]	60050266	69270757[41]	R4111995[53]	-	R4577454	R4577455
23-122691-002[188]	2-7/8 "	60050145X	60050145X[37]	60050146	69270702[41]	R4111995[53]	-	R4577454	R4577455
23-122743-002[187]	2-7/8 "	60050145X	60050145X[37]	60050146	69270702[41]	R4111995[53]	-	R4577454	R4577455
N/A	1-3/4 "	201183X	201184X[329]	SP7873S	NR	-	-	N/A	N/A
N/A	1-3/4 "	201179X	201180X	SP7873S	SP7880S[204]	-	-	N/A	N/A
23-122691-002[188]	2-7/8 "	60050145X	60050145X[37]	60050146	69270702[41]	R4111995[53]	-	R4577454	R4577455
23-122700-002[9]	2-1/2 "	R424244X	R424244X[37]	60050266	69270757[41]	R4111995[53]	-	R4577454	R4577455
23-122743-002[187]	2-7/8 "	60050145X	60050145X[37]	60050146	69270702[41]	R4111995[53]	-	R4577454	R4577455
23-122703-002[186]	2-7/8 "	60050145X	60050145X[37]	60050146	69270702[41]	R4111995[53]	-	R4577454	R4577455
N/A	1-3/4 "	201179X	201180X	SP7873S	SP7880S[204]	-	-	N/A	N/A
N/A	1-3/4 "	201183X	201184X[329]	SP7873S	NR	-	-	N/A	N/A
23-122743-002[187]	2-7/8 "	60050145X	60050145X[37]	60050146	69270702[41]	R4111995[53]	-	R4577454	R4577455
23-122703-002[186]	2-7/8 "	60050145X	60050145X[37]	60050146	69270702[41]	R4111995[53]	-	R4577454	R4577455
23-122700-002[9]	2-1/2 "	R424244X	R424244X[37]	60050266	69270757[41]	R4111995[53]	-	R4577454	R4577455
23-122691-002[188]	2-7/8 "	60050145X	60050145X[37]	60050146	69270702[41]	R4111995[53]	-	R4577454	R4577455
N/A	1-3/4 "	201183X	201184X[329]	SP7873S	NR	-	-	N/A	N/A
N/A	1-3/4 "	201179X	201180X	SP7873S	SP7880S[204]	-	-	N/A	N/A
23-122700-002[9]	2-1/2 "	R424244X	R424244X[37]	60050266	69270757[41]	R4111995[53]	-	R4577454	R4577455
23-122703-002[186]	2-7/8 "	60050145X	60050145X[37]	60050146	69270702[41]	R4111995[53]	-	R4577454	R4577455
23-122691-002[188]	2-7/8 "	60050145X	60050145X[37]	60050146	69270702[41]	R4111995[53]	-	R4577454	R4577455
23-122743-002[187]	2-7/8 "	60050145X	60050145X[37]	60050146	69270702[41]	R4111995[53]	-	R4577454	R4577455
N/A	1-3/4 "	201183X	201184X[329]	SP7873S	NR	-	-	N/A	N/A
N/A	1-3/4 "	201179X	201180X	SP7873S	SP7880S[204]	-	-	N/A	N/A
23-122703-002[186]	2-7/8 "	60050145X	60050145X[37]	60050146	69270702[41]	R4111995[53]	-	R4577454	R4577455
23-122700-002[9]	2-1/2 "	R424244X	R424244X[37]	60050266	69270757[41]	R4111995[53]	-	R4577454	R4577455
23-122691-002[188]	2-7/8 "	60050145X	60050145X[37]	60050146	69270702[41]	R4111995[53]	-	R4577454	R4577455
23-122743-002[187]	2-7/8 "	60050145X	60050145X[37]	60050146	69270702[41]	R4111995[53]	-	R4577454	R4577455
N/A	1-3/4 "	201183X	201184X[329]	SP7873S	NR	-	-	N/A	N/A
N/A	1-3/4 "	201179X	201180X	SP7873S	SP7880S[204]	-	-	N/A	N/A
N/A	1-5/8 "	201185	201186[329]	SP7895S	NR	-	-	R4577147	R4577147
N/A	1-5/8 "	201181	201182	SP7895S	NR	-	-	R4577147	R4577147
N/A	1-5/8 "	201185	201186[329]	SP7895S	NR	-	-	R4577147	R4577147
N/A	1-5/8 "	201181	201182	SP7895S	NR	-	-	R4577147	R4577147
N/A	1.09375	R4133484	R4133485	R4166819	NR	R4111629[53]	R4122484	R4577460	R4577460
N/A	1-1/8 "	R4133714	R4133715	R4166926	NR	R4111631[221]	R4122486	R4577452	R4577453
N/A	1-1/8 "	R4133719	R4133718	R4166926	NR	R4111634[53]	N/A	R4577452	R4577453
N/A	1-1/8 "	R4133714	R4133715	R4166926	NR	R4111995[53]	-	R4577454	R4577455
N/A	1-1/8 "	R4133716	R4133717	R4166926	NR	R4111772[53]	R4122488	R4577454	R4577455

221 - Power Brakes, 17,500 or 18,500 lb. Rear Axle
329 - Forward
340 - Use 69160457 for Disc Pad Retainer Clip
341 - Use 69160445 for Disc Pad Retainer Clip

MAKE MODEL YEAR AXLE CODE AXLE WEIGHT	AXLE & BRK. TYPE	BRK. MFG.	BRAKE SIZE	FMSI	MERITOR DISC PAD OR BRAKE SHOE	MERITOR GUIDE PIN OR RETURN SPRING KIT	MERITOR CALIPER HWD. KIT OR RETURN SPRING KIT	MERITOR ADJUSTER KIT (LEFT WHEEL)	MERITOR ADJUSTER KIT (RIGHT WHEEL)
FORD(Cont.)									
LN800 SERIES: LOUISVILLE 94.4 BBC SHORT CONVENTIONAL CHASSIS CAB(Cont.)									
1983									
	Fd	DN		7141 - D224	MD224[340]	69310693	60050153	NR	NR
F080, F090	Fd	DN		7149 - D236	MD236[341]	69310693	R40H5523	NR	NR
	Fd	DN		7149 - D236	MD236[341]	69310693	R40H5523	NR	NR
F090, F120	Fa	WG	15 " x 3 "	1245C - 321	R700321	R40H521	R40H9237	R40H3502	R40H3503
	Fa	WG	15 " x 3 "	1245C - 321	R700321	R40H521	R40H9237	R40H3502	R40H3503
R170, R175	Ra	KH	15 " x 5 "	4646 - 400	R700400	R40H595	R40H9220	R40H3538	R40H3539
	Ra	WG	15 " x 5 "	1252 - 346	R700346	R40H597	R40H9200	R40H3540	R40H3541
R185	Ra	WG	15 " x 6 "	4596 - 381	R700381	R40H597	R40H9200	R40H3540	R40H3541
	Ra	WG	15 " x 7 "	4597 - 383	R700383	R40H597	R40H9200	R40H3540	R40H3541
1982									
	Ra	LG	15 " x 6 "	4504A - 543	N/A	R40H618	NR	NR	NR
	Ra	LG	15 " x 6 "	4504A - 543	N/A	R40H618	NR	SP7888S	SP7888S
	Ra	LG	15 " x 7 "	4505A - 544	N/A	R40H618	NR	NR	NR
	Ra	LG	15 " x 7 "	4505A - 544	N/A	R40H618	NR	SP7888S	SP7888S
F050, F055, F060	Fa	KH	14 " x 2-1/2 "	2060 - 361	Discontinued	R40H596	R40H9219	R40H3536	R40H3537
F070	Fa	WG	15 " x 3 "	1245C - 321	R700321	R40H521	R40H9237	R40H3502	R40H3503
	Fa	WG	15 " x 3 "	1245C - 321	R700321	R40H521	R40H9237	R40H3502	R40H3503
	Fa	WG	15 " x 3 "	1245C - 321	R700321	R40H521	R40H9237	R40H3502	R40H3503
	Fa	WG	15 " x 3 "	1245C - 321	R700321	R40H521	R40H9237	R40H3502	R40H3503
	Fd	DN		7141 - D224	MD224[340]	69310693	60050153	NR	NR
F080, F090	Fd	DN		7149 - D236	MD236[341]	69310693	R40H5523	NR	NR
	Fd	DN		7149 - D236	MD236[341]	69310693	R40H5523	NR	NR
F090, F120	Fa	WG	15 " x 3 "	1245C - 321	R700321	R40H521	R40H9237	R40H3502	R40H3503
	Fa	WG	15 " x 3 "	1245C - 321	R700321	R40H521	R40H9237	R40H3502	R40H3503
R170, R175	Ra	KH	15 " x 5 "	4646 - 400	R700400	R40H595	R40H9220	R40H3538	R40H3539
	Ra	WG	15 " x 5 "	1252 - 346	R700346	R40H597	R40H9200	R40H3540	R40H3541
R185	Ra	WG	15 " x 6 "	4596 - 381	R700381	R40H597	R40H9200	R40H3540	R40H3541
	Ra	WG	15 " x 7 "	4597 - 383	R700383	R40H597	R40H9200	R40H3540	R40H3541
1981									
	Ra	LG	15 " x 6 "	4504A - 543	N/A	R40H618	NR	SP7888S	SP7888S
	Ra	LG	15 " x 6 "	4504A - 543	N/A	R40H618	NR	NR	NR
	Ra	LG	15 " x 7 "	4505A - 544	N/A	R40H618	NR	NR	NR
	Ra	LG	15 " x 7 "	4505A - 544	N/A	R40H618	NR	SP7888S	SP7888S
F050, F055, F060	Fa	KH	14 " x 2-1/2 "	2060 - 361	Discontinued	R40H596	R40H9219	R40H3536	R40H3537
F070	Fa	WG	15 " x 3 "	1245C - 321	R700321	R40H521	R40H9237	R40H3502	R40H3503
	Fa	WG	15 " x 3 "	1245C - 321	R700321	R40H521	R40H9237	R40H3502	R40H3503
	Fa	WG	15 " x 3 "	1245C - 321	R700321	R40H521	R40H9237	R40H3502	R40H3503
	Fa	WG	15 " x 3 "	1245C - 321	R700321	R40H521	R40H9237	R40H3502	R40H3503
	Fd	DN		7141 - D224	MD224[340]	69310693	60050153	NR	NR
F080, F090	Fd	DN		7149 - D236	MD236[341]	69310693	R40H5523	NR	NR
	Fd	DN		7149 - D236	MD236[341]	69310693	R40H5523	NR	NR
F090, F120	Fa	WG	15 " x 3 "	1245C - 321	R700321	R40H521	R40H9237	R40H3502	R40H3503
	Fa	WG	15 " x 3 "	1245C - 321	R700321	R40H521	R40H9237	R40H3502	R40H3503
R170, R175	Ra	KH	15 " x 5 "	4646 - 400	R700400	R40H595	R40H9220	R40H3538	R40H3539
	Ra	WG	15 " x 5 "	1252 - 346	R700346	R40H597	R40H9200	R40H3540	R40H3541
R185	Ra	WG	15 " x 6 "	4596 - 381	R700381	R40H597	R40H9200	R40H3540	R40H3541
	Ra	WG	15 " x 7 "	4597 - 383	R700383	R40H597	R40H9200	R40H3540	R40H3541
1980									
	Ra	LG	15 " x 6 "	4504A - 543	N/A	R40H618	NR	SP7888S	SP7888S
	Ra	LG	15 " x 6 "	4504A - 543	N/A	R40H618	NR	NR	NR
	Ra	LG	15 " x 7 "	4505A - 544	N/A	R40H618	NR	SP7888S	SP7888S
	Ra	LG	15 " x 7 "	4505A - 544	N/A	R40H618	NR	NR	NR
F050, F055, F060	Fa	KH	14 " x 2-1/2 "	2060 - 361	Discontinued	R40H596	R40H9219	R40H3536	R40H3537
F070	Fa	WG	15 " x 3 "	1245C - 321	R700321	R40H521	R40H9237	R40H3502	R40H3503
	Fa	WG	15 " x 3 "	1245C - 321	R700321	R40H521	R40H9237	R40H3502	R40H3503
	Fa	WG	15 " x 3 "	1245C - 321	R700321	R40H521	R40H9237	R40H3502	R40H3503
	Fa	WG	15 " x 3 "	1245C - 321	R700321	R40H521	R40H9237	R40H3502	R40H3503
	Fd	DN		7141 - D224	MD224[340]	69310693	60050153	NR	NR
F080, F090	Fd	DN		7149 - D236	MD236[341]	69310693	R40H5523	NR	NR
	Fd	DN		7149 - D236	MD236[341]	69310693	R40H5523	NR	NR
F090, F120	Fa	WG	15 " x 3 "	1245C - 321	R700321	R40H521	R40H9237	R40H3502	R40H3503
	Fa	WG	15 " x 3 "	1245C - 321	R700321	R40H521	R40H9237	R40H3502	R40H3503
R170, R175	Ra	KH	15 " x 5 "	4646 - 400	R700400	R40H595	R40H9220	R40H3538	R40H3539

9 - 6 Stud, Dayton Rotor, Hat Style
53 - Power Brakes
214 - Power Brakes, Split System
37 - Also available as a New unit
186 - 10 Stud
221 - Power Brakes, 17,500 or 18,500 lb. Rear Axle
41 - Aluminum piston
188 - 6 Stud, 9.251" Hub
222 - Power Brakes, 18,500 or 22,000 lb. Rear Axle

MERITOR DRUM OR ROTOR NO.	CALIPER OR CYLINDER BORE SIZE	MERITOR CALIPER OR WHEEL CYLINDER (LEFT)	MERITOR CALIPER OR WHEEL CYLINDER (RIGHT)	MERITOR CALIPER OR WHEEL CYLINDER REPAIR KIT	MERITOR CALIPER PISTON	MERITOR MASTER CYLINDER	MERITOR MASTER CYLINDER KIT	MERITOR BRAKE HOSE (LEFT)	MERITOR BRAKE HOSE (RIGHT)
									FORD(Cont.)
LN800 SERIES: LOUISVILLE 94.4 BBC SHORT CONVENTIONAL CHASSIS CAB(Cont.)									
23-122700-002[9]	2-1/2 "	R424244X	R424244X[37]	60050266	69270757[41]	R4111992[214]	R4122386	R4577452	R4577453
23-122691-002[188]	2-7/8 "	60050145X	60050145X[37]	60050146	69270702[41]	R4111992[214]	R4122386	R4577452	R4577453
23-122703-002[186]	2-7/8 "	60050145X	60050145X[37]	60050146	69270702[41]	R4111992[214]	R4122386	R4577452	R4577453
N/A	1-1/4 "	R4133581	R4133581	R4166923	NR	R4111992[214]	R4122386	R4577452	R4577453
N/A	1-1/4 "	R4133720	R4133721	R4166923	NR	R4111630[222]	N/A	R4577452	R4577453
N/A	1-1/2 "	R4033607	R4033607	R4166818	NR	-	-	R4577147	R4577147
N/A	1-5/8 "	R4133338	R4133338	R4166689	NR	-	-	R4577147	R4577147
N/A	1-5/8 "	R4133338	R4133338	R4166689	NR	-	-	R4577147	R4577147
N/A	1-3/4 "	R4133400	R4133400	R4166917	NR	-	-	R4577147	R4577147
N/A	1-5/8 "	201181	201182	SP7895S	NR	-	-	R4577147	R4577147
N/A	1-5/8 "	201185	201186[329]	SP7895S	NR	-	-	R4577147	R4577147
N/A	1-5/8 "	201181	201182	SP7895S	NR	-	-	R4577147	R4577147
N/A	1-5/8 "	201185	201186[329]	SP7895S	NR	-	-	R4577147	R4577147
N/A	1.09375	R4133484	R4133485	R4166819	NR	R4111629[53]	R4122484	R4577460	R4577460
N/A	1-1/8 "	R4133716	R4133717	R4166926	NR	R4111772[53]	R4122488	R4577454	R4577455
N/A	1-1/8 "	R4133719	R4133718	R4166926	NR	R4111634[53]	N/A	R4577452	R4577453
N/A	1-1/8 "	R4133714	R4133715	R4166926	NR	R4111995[53]	-	R4577454	R4577455
N/A	1-1/8 "	R4133714	R4133715	R4166926	NR	R4111631[221]	R4122486	R4577452	R4577453
23-122700-002[9]	2-1/2 "	R424244X	R424244X[37]	60050266	69270757[41]	R4111992[214]	R4122386	R4577452	R4577453
23-122691-002[188]	2-7/8 "	60050145X	60050145X[37]	60050146	69270702[41]	R4111992[214]	R4122386	R4577452	R4577453
23-122703-002[186]	2-7/8 "	60050145X	60050145X[37]	60050146	69270702[41]	R4111992[214]	R4122386	R4577452	R4577453
N/A	1-1/4 "	R4133720	R4133721	R4166923	NR	R4111630[222]	N/A	R4577452	R4577453
N/A	1-1/4 "	R4133581	R4133581	R4166923	NR	R4111992[214]	R4122386	R4577452	R4577453
N/A	1-1/2 "	R4033607	R4033607	R4166818	NR	-	-	R4577147	R4577147
N/A	1-5/8 "	R4133338	R4133338	R4166689	NR	-	-	R4577147	R4577147
N/A	1-5/8 "	R4133338	R4133338	R4166689	NR	-	-	R4577147	R4577147
N/A	1-3/4 "	R4133400	R4133400	R4166917	NR	-	-	R4577147	R4577147
N/A	1-5/8 "	201185	201186[329]	SP7895S	NR	-	-	R4577147	R4577147
N/A	1-5/8 "	201181	201182	SP7895S	NR	-	-	R4577147	R4577147
N/A	1-5/8 "	201181	201182	SP7895S	NR	-	-	R4577147	R4577147
N/A	1-5/8 "	201185	201186[329]	SP7895S	NR	-	-	R4577147	R4577147
N/A	1.09375	R4133484	R4133485	R4166819	NR	R4111629[53]	R4122484	R4577460	R4577460
N/A	1-1/8 "	R4133714	R4133715	R4166926	NR	R4111995[53]	-	R4577454	R4577455
N/A	1-1/8 "	R4133716	R4133717	R4166926	NR	R4111772[53]	R4122488	R4577454	R4577455
N/A	1-1/8 "	R4133719	R4133718	R4166926	NR	R4111634[53]	N/A	R4577452	R4577453
N/A	1-1/8 "	R4133714	R4133715	R4166926	NR	R4111631[221]	R4122486	R4577452	R4577453
23-122700-002[9]	2-1/2 "	R424244X	R424244X[37]	60050266	69270757[41]	R4111992[214]	R4122386	R4577452	R4577453
23-122703-002[186]	2-7/8 "	60050145X	60050145X[37]	60050146	69270702[41]	R4111992[214]	R4122386	R4577452	R4577453
23-122691-002[188]	2-7/8 "	60050145X	60050145X[37]	60050146	69270702[41]	R4111992[214]	R4122386	R4577452	R4577453
N/A	1-1/4 "	R4133581	R4133581	R4166923	NR	R4111992[214]	R4122386	R4577452	R4577453
N/A	1-1/4 "	R4133720	R4133721	R4166923	NR	R4111630[222]	N/A	R4577452	R4577453
N/A	1-1/2 "	R4033607	R4033607	R4166818	NR	-	-	R4577147	R4577147
N/A	1-5/8 "	R4133338	R4133338	R4166689	NR	-	-	R4577147	R4577147
N/A	1-5/8 "	R4133338	R4133338	R4166689	NR	-	-	R4577147	R4577147
N/A	1-3/4 "	R4133400	R4133400	R4166917	NR	-	-	R4577147	R4577147
N/A	1-5/8 "	201185	201186[329]	SP7895S	NR	-	-	R4577147	R4577147
N/A	1-5/8 "	201181	201182	SP7895S	NR	-	-	R4577147	R4577147
N/A	1-5/8 "	201185	201186[329]	SP7895S	NR	-	-	R4577147	R4577147
N/A	1-5/8 "	201181	201182	SP7895S	NR	-	-	R4577147	R4577147
N/A	1.09375	R4133484	R4133485	R4166819	NR	R4111629[53]	R4122484	R4577460	R4577460
N/A	1-1/8 "	R4133714	R4133715	R4166926	NR	R4111631[221]	R4122486	R4577452	R4577453
N/A	1-1/8 "	R4133714	R4133715	R4166926	NR	R4111995[53]	-	R4577454	R4577455
N/A	1-1/8 "	R4133716	R4133717	R4166926	NR	R4111772[53]	R4122488	R4577454	R4577455
N/A	1-1/8 "	R4133719	R4133718	R4166926	NR	R4111634[53]	N/A	R4577452	R4577453
23-122700-002[9]	2-1/2 "	R424244X	R424244X[37]	60050266	69270757[41]	R4111992[214]	R4122386	R4577452	R4577453
23-122691-002[188]	2-7/8 "	60050145X	60050145X[37]	60050146	69270702[41]	R4111992[214]	R4122386	R4577452	R4577453
23-122703-002[186]	2-7/8 "	60050145X	60050145X[37]	60050146	69270702[41]	R4111992[214]	R4122386	R4577452	R4577453
N/A	1-1/4 "	R4133720	R4133721	R4166923	NR	R4111630[222]	N/A	R4577452	R4577453
N/A	1-1/4 "	R4133581	R4133581	R4166923	NR	R4111992[214]	R4122386	R4577452	R4577453
N/A	1-1/2 "	R4033607	R4033607	R4166818	NR	-	-	R4577147	R4577147

329 - Forward

340 - Use 69160457 for Disc Pad Retainer Clip

341 - Use 69160445 for Disc Pad Retainer Clip

MAKE MODEL YEAR AXLE CODE AXLE WEIGHT	AXLE & BRK. TYPE	BRK. MFG.	BRAKE SIZE	FMSI	MERITOR DISC PAD OR BRAKE SHOE	MERITOR GUIDE PIN OR RETURN SPRING KIT	MERITOR CALIPER HWD. KIT OR RETURN SPRING KIT	MERITOR ADJUSTER KIT (LEFT WHEEL)	MERITOR ADJUSTER KIT (RIGHT WHEEL)
FORD(Cont.)									
LN800 SERIES: LOUISVILLE 94.4 BBC SHORT CONVENTIONAL CHASSIS CAB(Cont.)									
1980									
	Ra	WG	15 " x 5 "	1252 - 346	R700346	R40H597	R40H9200	R40H3540	R40H3541
R185	Ra	WG	15 " x 6 "	4596 - 381	R700381	R40H597	R40H9200	R40H3540	R40H3541
	Ra	WG	15 " x 7 "	4597 - 383	R700383	R40H597	R40H9200	R40H3540	R40H3541
1979									
	Ra	LG	15 " x 6 "	4504A - 543	N/A	R40H618	NR	NR	NR
	Ra	LG	15 " x 6 "	4504A - 543	N/A	R40H618	NR	SP7888S	SP7888S
	Ra	LG	15 " x 7 "	4505A - 544	N/A	R40H618	NR	SP7888S	SP7888S
	Ra	LG	15 " x 7 "	4505A - 544	N/A	R40H618	NR	NR	NR
F050, F055, F060	Fa	KH	14 " x 2-1/2 "	2060 - 361	Discontinued	R40H596	R40H9219	R40H3536	R40H3537
F070	Fa	WG	15 " x 3 "	1245C - 321	R700321	R40H521	R40H9237	R40H3502	R40H3503
	Fa	WG	15 " x 3 "	1245C - 321	R700321	R40H521	R40H9237	R40H3502	R40H3503
	Fa	WG	15 " x 3 "	1245C - 321	R700321	R40H521	R40H9237	R40H3502	R40H3503
	Fa	WG	15 " x 3 "	1245C - 321	R700321	R40H521	R40H9237	R40H3502	R40H3503
	Fd	DN		7141 - D224	MD224[340]	69310693	60050153	NR	NR
F080, F090	Fd	DN		7149 - D236	MD236[341]	69310693	R40H5523	NR	NR
	Fd	DN		7149 - D236	MD236[341]	69310693	R40H5523	NR	NR
F090, F120	Fa	WG	15 " x 3 "	1245C - 321	R700321	R40H521	R40H9237	R40H3502	R40H3503
	Fa	WG	15 " x 3 "	1245C - 321	R700321	R40H521	R40H9237	R40H3502	R40H3503
R170, R175	Ra	KH	15 " x 5 "	4646 - 400	R700400	R40H595	R40H9220	R40H3538	R40H3539
	Ra	WG	15 " x 5 "	1252 - 346	R700346	R40H597	R40H9200	R40H3540	R40H3541
R185	Ra	WG	15 " x 6 "	4596 - 381	R700381	R40H597	R40H9200	R40H3540	R40H3541
	Ra	WG	15 " x 7 "	4597 - 383	R700383	R40H597	R40H9200	R40H3540	R40H3541
1978									
	Ra	LG	15 " x 6 "	4504A - 543	N/A	R40H618	NR	SP7888S	SP7888S
	Ra	LG	15 " x 6 "	4504A - 543	N/A	R40H618	NR	NR	NR
	Ra	LG	15 " x 7 "	4505A - 544	N/A	R40H618	NR	SP7888S	SP7888S
	Ra	LG	15 " x 7 "	4505A - 544	N/A	R40H618	NR	NR	NR
F050, F055, F060	Fa	KH	14 " x 2-1/2 "	2060 - 361	Discontinued	R40H596	R40H9219	R40H3536	R40H3537
F070	Fa	WG	15 " x 3 "	1245C - 321	R700321	R40H521	R40H9237	R40H3502	R40H3503
	Fa	WG	15 " x 3 "	1245C - 321	R700321	R40H521	R40H9237	R40H3502	R40H3503
	Fa	WG	15 " x 3 "	1245C - 321	R700321	R40H521	R40H9237	R40H3502	R40H3503
	Fa	WG	15 " x 3 "	1245C - 321	R700321	R40H521	R40H9237	R40H3502	R40H3503
	Fd	DN		7141 - D224	MD224[340]	69310693	60050153	NR	NR
F080, F090	Fd	DN		7149 - D236	MD236[341]	69310693	R40H5523	NR	NR
	Fd	DN		7149 - D236	MD236[341]	69310693	R40H5523	NR	NR
F090, F120	Fa	WG	15 " x 3 "	1245C - 321	R700321	R40H521	R40H9237	R40H3502	R40H3503
	Fa	WG	15 " x 3 "	1245C - 321	R700321	R40H521	R40H9237	R40H3502	R40H3503
R170, R175	Ra	KH	15 " x 5 "	4646 - 400	R700400	R40H595	R40H9220	R40H3538	R40H3539
	Ra	WG	15 " x 5 "	1252 - 346	R700346	R40H597	R40H9200	R40H3540	R40H3541
R185	Ra	WG	15 " x 6 "	4596 - 381	R700381	R40H597	R40H9200	R40H3540	R40H3541
	Ra	WG	15 " x 7 "	4597 - 383	R700383	R40H597	R40H9200	R40H3540	R40H3541
1977									
	Ra	LG	15 " x 6 "	4504A - 543	N/A	R40H618	NR	SP7888S	SP7888S
	Ra	LG	15 " x 6 "	4504A - 543	N/A	R40H618	NR	NR	NR
	Ra	LG	15 " x 7 "	4505A - 544	N/A	R40H618	NR	NR	NR
	Ra	LG	15 " x 7 "	4505A - 544	N/A	R40H618	NR	SP7888S	SP7888S
F050, F055, F060	Fa	KH	14 " x 2-1/2 "	2060 - 361	Discontinued	R40H596	R40H9219	R40H3536	R40H3537
F070	Fa	WG	15 " x 3 "	1245C - 321	R700321	R40H521	R40H9237	R40H3502	R40H3503
	Fa	WG	15 " x 3 "	1245C - 321	R700321	R40H521	R40H9237	R40H3502	R40H3503
	Fa	WG	15 " x 3 "	1245C - 321	R700321	R40H521	R40H9237	R40H3502	R40H3503
	Fa	WG	15 " x 3 "	1245C - 321	R700321	R40H521	R40H9237	R40H3502	R40H3503
	Fd	DN		7141 - D224	MD224[340]	69310693	60050153	NR	NR
F080, F090	Fd	DN		7149 - D236	MD236[341]	69310693	R40H5523	NR	NR
	Fd	DN		7149 - D236	MD236[341]	69310693	R40H5523	NR	NR
F090, F120	Fa	WG	15 " x 3 "	1245C - 321	R700321	R40H521	R40H9237	R40H3502	R40H3503
	Fa	WG	15 " x 3 "	1245C - 321	R700321	R40H521	R40H9237	R40H3502	R40H3503
R170, R175	Ra	KH	15 " x 5 "	4646 - 400	R700400	R40H595	R40H9220	R40H3538	R40H3539
	Ra	WG	15 " x 5 "	1252 - 346	R700346	R40H597	R40H9200	R40H3540	R40H3541
R185	Ra	WG	15 " x 6 "	4596 - 381	R700381	R40H597	R40H9200	R40H3540	R40H3541
	Ra	WG	15 " x 7 "	4597 - 383	R700383	R40H597	R40H9200	R40H3540	R40H3541
1976									
	Ra	LG	15 " x 6 "	4504A - 543	N/A	R40H618	NR	SP7888S	SP7888S
	Ra	LG	15 " x 6 "	4504A - 543	N/A	R40H618	NR	NR	NR

9 - 6 Stud, Dayton Rotor, Hat Style
53 - Power Brakes
214 - Power Brakes, Split System

37 - Also available as a New unit
186 - 10 Stud
221 - Power Brakes, 17,500 or 18,500 lb. Rear Axle

41 - Aluminum piston
188 - 6 Stud, 9.251" Hub
222 - Power Brakes, 18,500 or 22,000 lb. Rear Axle

MERITOR DRUM OR ROTOR NO.	CALIPER OR CYLINDER BORE SIZE	MERITOR CALIPER OR WHEEL CYLINDER (LEFT)	MERITOR CALIPER OR WHEEL CYLINDER (RIGHT)	MERITOR CALIPER OR WHEEL CYLINDER REPAIR KIT	MERITOR CALIPER PISTON	MERITOR MASTER CYLINDER	MERITOR MASTER CYLINDER KIT	MERITOR BRAKE HOSE (LEFT)	MERITOR BRAKE HOSE (RIGHT)
									FORD(Cont.)
LN800 SERIES: LOUISVILLE 94.4 BBC SHORT CONVENTIONAL CHASSIS CAB(Cont.)									
N/A	1-5/8 "	R4133338	R4133338	R4166689	NR	-	-	R4577147	R4577147
N/A	1-5/8 "	R4133338	R4133338	R4166689	NR	-	-	R4577147	R4577147
N/A	1-3/4 "	R4133400	R4133400	R4166917	NR	-	-	R4577147	R4577147
N/A	1-5/8 "	201181	201182	SP7895S	NR	-	-	R4577147	R4577147
N/A	1-5/8 "	201185	201186[329]	SP7895S	NR	-	-	R4577147	R4577147
N/A	1-5/8 "	201185	201186[329]	SP7895S	NR	-	-	R4577147	R4577147
N/A	1-5/8 "	201181	201182	SP7895S	NR	-	-	R4577147	R4577147
N/A	1.09375	R4133484	R4133485	R4166819	NR	R4111629[53]	R4122484	R4577460	R4577460
N/A	1-1/8 "	R4133716	R4133717	R4166926	NR	R4111772[53]	R4122488	R4577454	R4577455
N/A	1-1/8 "	R4133714	R4133715	R4166926	NR	R4111631[221]	R4122486	R4577452	R4577453
N/A	1-1/8 "	R4133714	R4133715	R4166926	NR	R4111995[53]	-	R4577454	R4577455
N/A	1-1/8 "	R4133719	R4133718	R4166926	NR	R4111634[53]	N/A	R4577452	R4577453
23-122700-002[9]	2-1/2 "	R424244X	R424244X[37]	60050266	69270757[41]	R4111992[214]	R4122386	R4577452	R4577453
23-122691-002[188]	2-7/8 "	60050145X	60050145X[37]	60050146	69270702[41]	R4111992[214]	R4122386	R4577452	R4577453
23-122703-002[186]	2-7/8 "	60050145X	60050145X[37]	60050146	69270702[41]	R4111992[214]	R4122386	R4577452	R4577453
N/A	1-1/4 "	R4133581	R4133581	R4166923	NR	R4111992[214]	R4122386	R4577452	R4577453
N/A	1-1/4 "	R4133720	R4133721	R4166923	NR	R4111630[222]	N/A	R4577452	R4577453
N/A	1-1/2 "	R4033607	R4033607	R4166818	NR	-	-	R4577147	R4577147
N/A	1-5/8 "	R4133338	R4133338	R4166689	NR	-	-	R4577147	R4577147
N/A	1-5/8 "	R4133338	R4133338	R4166689	NR	-	-	R4577147	R4577147
N/A	1-3/4 "	R4133400	R4133400	R4166917	NR	-	-	R4577147	R4577147
N/A	1-5/8 "	201185	201186[329]	SP7895S	NR	-	-	R4577147	R4577147
N/A	1-5/8 "	201181	201182	SP7895S	NR	-	-	R4577147	R4577147
N/A	1-5/8 "	201185	201186[329]	SP7895S	NR	-	-	R4577147	R4577147
N/A	1-5/8 "	201181	201182	SP7895S	NR	-	-	R4577147	R4577147
N/A	1.09375	R4133484	R4133485	R4166819	NR	R4111629[53]	R4122484	R4577460	R4577460
N/A	1-1/8 "	R4133716	R4133717	R4166926	NR	R4111772[53]	R4122488	R4577454	R4577455
N/A	1-1/8 "	R4133714	R4133715	R4166926	NR	R4111995[53]	-	R4577454	R4577455
N/A	1-1/8 "	R4133719	R4133718	R4166926	NR	R4111634[53]	N/A	R4577452	R4577453
N/A	1-1/8 "	R4133714	R4133715	R4166926	NR	R4111631[221]	R4122486	R4577452	R4577453
23-122700-002[9]	2-1/2 "	R424244X	R424244X[37]	60050266	69270757[41]	R4111992[214]	R4122386	R4577452	R4577453
23-122703-002[186]	2-7/8 "	60050145X	60050145X[37]	60050146	69270702[41]	R4111992[214]	R4122386	R4577452	R4577453
23-122691-002[188]	2-7/8 "	60050145X	60050145X[37]	60050146	69270702[41]	R4111992[214]	R4122386	R4577452	R4577453
N/A	1-1/4 "	R4133720	R4133721	R4166923	NR	R4111630[222]	N/A	R4577452	R4577453
N/A	1-1/4 "	R4133581	R4133581	R4166923	NR	R4111992[214]	R4122386	R4577452	R4577453
N/A	1-1/2 "	R4033607	R4033607	R4166818	NR	-	-	R4577147	R4577147
N/A	1-5/8 "	R4133338	R4133338	R4166689	NR	-	-	R4577147	R4577147
N/A	1-5/8 "	R4133338	R4133338	R4166689	NR	-	-	R4577147	R4577147
N/A	1-3/4 "	R4133400	R4133400	R4166917	NR	-	-	R4577147	R4577147
N/A	1-5/8 "	201185	201186[329]	SP7895S	NR	-	-	R4577147	R4577147
N/A	1-5/8 "	201181	201182	SP7895S	NR	-	-	R4577147	R4577147
N/A	1-5/8 "	201181	201182	SP7895S	NR	-	-	R4577147	R4577147
N/A	1-5/8 "	201185	201186[329]	SP7895S	NR	-	-	R4577147	R4577147
N/A	1.09375	R4133484	R4133485	R4166819	NR	R4111629[53]	R4122484	R4577460	R4577460
N/A	1-1/8 "	R4133716	R4133717	R4166926	NR	R4111772[53]	R4122488	R4577454	R4577455
N/A	1-1/8 "	R4133714	R4133715	R4166926	NR	R4111995[53]	-	R4577454	R4577455
N/A	1-1/8 "	R4133719	R4133718	R4166926	NR	R4111634[53]	N/A	R4577452	R4577453
N/A	1-1/8 "	R4133714	R4133715	R4166926	NR	R4111631[221]	R4122486	R4577452	R4577453
23-122700-002[9]	2-1/2 "	R424244X	R424244X[37]	60050266	69270757[41]	R4111992[214]	R4122386	R4577452	R4577453
23-122691-002[188]	2-7/8 "	60050145X	60050145X[37]	60050146	69270702[41]	R4111992[214]	R4122386	R4577452	R4577453
23-122703-002[186]	2-7/8 "	60050145X	60050145X[37]	60050146	69270702[41]	R4111992[214]	R4122386	R4577452	R4577453
N/A	1-1/4 "	R4133720	R4133721	R4166923	NR	R4111630[222]	N/A	R4577452	R4577453
N/A	1-1/4 "	R4133581	R4133581	R4166923	NR	R4111992[214]	R4122386	R4577452	R4577453
N/A	1-1/2 "	R4033607	R4033607	R4166818	NR	-	-	R4577147	R4577147
N/A	1-5/8 "	R4133338	R4133338	R4166689	NR	-	-	R4577147	R4577147
N/A	1-5/8 "	R4133338	R4133338	R4166689	NR	-	-	R4577147	R4577147
N/A	1-3/4 "	R4133400	R4133400	R4166917	NR	-	-	R4577147	R4577147
N/A	1-5/8 "	201185	201186[329]	SP7895S	NR	-	-	R4577147	R4577147
N/A	1-5/8 "	201181	201182	SP7895S	NR	-	-	R4577147	R4577147

329 - Forward

340 - Use 69160457 for Disc Pad Retainer Clip

341 - Use 69160445 for Disc Pad Retainer Clip

MAKE MODEL YEAR AXLE CODE AXLE WEIGHT	AXLE & BRK. TYPE	BRK. MFG.	BRAKE SIZE	FMSI	MERITOR DISC PAD OR BRAKE SHOE	MERITOR GUIDE PIN OR RETURN SPRING KIT	MERITOR CALIPER HWD. KIT OR RETURN SPRING KIT	MERITOR ADJUSTER KIT (LEFT WHEEL)	MERITOR ADJUSTER KIT (RIGHT WHEEL)
FORD(Cont.)									
LN800 SERIES: LOUISVILLE 94.4 BBC SHORT CONVENTIONAL CHASSIS CAB(Cont.)									
1976									
	Ra	LG	15 " x 7 "	4505A - 544	N/A	R40H618	NR	SP7888S	SP7888S
	Ra	LG	15 " x 7 "	4505A - 544	N/A	R40H618	NR	NR	NR
F050, F055, F060	Fa	KH	14 " x 2-1/2 "	2060 - 361	Discontinued	R40H596	R40H9219	R40H3536	R40H3537
F070	Fa	WG	15 " x 3 "	1245C - 321	R700321	R40H521	R40H9237	R40H3502	R40H3503
	Fa	WG	15 " x 3 "	1245C - 321	R700321	R40H521	R40H9237	R40H3502	R40H3503
	Fa	WG	15 " x 3 "	1245C - 321	R700321	R40H521	R40H9237	R40H3502	R40H3503
	Fa	WG	15 " x 3 "	1245C - 321	R700321	R40H521	R40H9237	R40H3502	R40H3503
	Fd	DN		7141 - D224	MD224[340]	69310693	60050153	NR	NR
F080, F090	Fd	DN		7149 - D236	MD236[341]	69310693	R40H5523	NR	NR
	Fd	DN		7149 - D236	MD236[341]	69310693	R40H5523	NR	NR
F090, F120	Fa	WG	15 " x 3 "	1245C - 321	R700321	R40H521	R40H9237	R40H3502	R40H3503
	Fa	WG	15 " x 3 "	1245C - 321	R700321	R40H521	R40H9237	R40H3502	R40H3503
R170, R175	Ra	KH	15 " x 5 "	4646 - 400	R700400	R40H595	R40H9220	R40H3538	R40H3539
	Ra	WG	15 " x 5 "	1252 - 346	R700346	R40H597	R40H9200	R40H3540	R40H3541
R185	Ra	WG	15 " x 6 "	4596 - 381	R700381	R40H597	R40H9200	R40H3540	R40H3541
	Ra	WG	15 " x 7 "	4597 - 383	R700383	R40H597	R40H9200	R40H3540	R40H3541
1975									
	Ra	LG	15 " x 6 "	4504A - 543	N/A	R40H618	NR	NR	NR
	Ra	LG	15 " x 6 "	4504A - 543	N/A	R40H618	NR	SP7888S	SP7888S
	Ra	LG	15 " x 7 "	4505A - 544	N/A	R40H618	NR	SP7888S	SP7888S
	Ra	LG	15 " x 7 "	4505A - 544	N/A	R40H618	NR	NR	NR
F050, F055, F060	Fa	KH	14 " x 2-1/2 "	2060 - 361	Discontinued	R40H596	R40H9219	R40H3536	R40H3537
F070	Fa	WG	15 " x 3 "	1245C - 321	R700321	R40H521	R40H9237	R40H3502	R40H3503
	Fa	WG	15 " x 3 "	1245C - 321	R700321	R40H521	R40H9237	R40H3502	R40H3503
	Fa	WG	15 " x 3 "	1245C - 321	R700321	R40H521	R40H9237	R40H3502	R40H3503
	Fa	WG	15 " x 3 "	1245C - 321	R700321	R40H521	R40H9237	R40H3502	R40H3503
	Fd	DN		7141 - D224	MD224[340]	69310693	60050153	NR	NR
F080, F090	Fd	DN		7149 - D236	MD236[341]	69310693	R40H5523	NR	NR
	Fd	DN		7149 - D236	MD236[341]	69310693	R40H5523	NR	NR
F090, F120	Fa	WG	15 " x 3 "	1245C - 321	R700321	R40H521	R40H9237	R40H3502	R40H3503
	Fa	WG	15 " x 3 "	1245C - 321	R700321	R40H521	R40H9237	R40H3502	R40H3503
R170, R175	Ra	KH	15 " x 5 "	4646 - 400	R700400	R40H595	R40H9220	R40H3538	R40H3539
	Ra	WG	15 " x 5 "	1252 - 346	R700346	R40H597	R40H9200	R40H3540	R40H3541
R185	Ra	WG	15 " x 6 "	4596 - 381	R700381	R40H597	R40H9200	R40H3540	R40H3541
	Ra	WG	15 " x 7 "	4597 - 383	R700383	R40H597	R40H9200	R40H3540	R40H3541
1974									
	Ra	LG	15 " x 6 "	4504A - 543	N/A	R40H618	NR	NR	NR
	Ra	LG	15 " x 6 "	4504A - 543	N/A	R40H618	NR	SP7888S	SP7888S
	Ra	LG	15 " x 7 "	4505A - 544	N/A	R40H618	NR	SP7888S	SP7888S
	Ra	LG	15 " x 7 "	4505A - 544	N/A	R40H618	NR	NR	NR
F050, F055, F060	Fa	KH	14 " x 2-1/2 "	2060 - 361	Discontinued	R40H596	R40H9219	R40H3536	R40H3537
F070	Fa	WG	15 " x 3 "	1245C - 321	R700321	R40H521	R40H9237	R40H3502	R40H3503
	Fa	WG	15 " x 3 "	1245C - 321	R700321	R40H521	R40H9237	R40H3502	R40H3503
	Fa	WG	15 " x 3 "	1245C - 321	R700321	R40H521	R40H9237	R40H3502	R40H3503
	Fa	WG	15 " x 3 "	1245C - 321	R700321	R40H521	R40H9237	R40H3502	R40H3503
	Fd	DN		7141 - D224	MD224[340]	69310693	60050153	NR	NR
F080, F090	Fd	DN		7149 - D236	MD236[341]	69310693	R40H5523	NR	NR
	Fd	DN		7149 - D236	MD236[341]	69310693	R40H5523	NR	NR
F090, F120	Fa	WG	15 " x 3 "	1245C - 321	R700321	R40H521	R40H9237	R40H3502	R40H3503
	Fa	WG	15 " x 3 "	1245C - 321	R700321	R40H521	R40H9237	R40H3502	R40H3503
R170, R175	Ra	KH	15 " x 5 "	4646 - 400	R700400	R40H595	R40H9220	R40H3538	R40H3539
	Ra	WG	15 " x 5 "	1252 - 346	R700346	R40H597	R40H9200	R40H3540	R40H3541
R185	Ra	WG	15 " x 6 "	4596 - 381	R700381	R40H597	R40H9200	R40H3540	R40H3541
	Ra	WG	15 " x 7 "	4597 - 383	R700383	R40H597	R40H9200	R40H3540	R40H3541
1973									
	Ra	LG	15 " x 6 "	4504A - 543	N/A	R40H618	NR	SP7888S	SP7888S
	Ra	LG	15 " x 6 "	4504A - 543	N/A	R40H618	NR	NR	NR
	Ra	LG	15 " x 7 "	4505A - 544	N/A	R40H618	NR	NR	NR
	Ra	LG	15 " x 7 "	4505A - 544	N/A	R40H618	NR	SP7888S	SP7888S
F050, F055, F060	Fa	KH	14 " x 2-1/2 "	2060 - 361	Discontinued	R40H596	R40H9219	R40H3536	R40H3537
F070	Fa	WG	15 " x 3 "	1245C - 321	R700321	R40H521	R40H9237	R40H3502	R40H3503
	Fa	WG	15 " x 3 "	1245C - 321	R700321	R40H521	R40H9237	R40H3502	R40H3503
	Fa	WG	15 " x 3 "	1245C - 321	R700321	R40H521	R40H9237	R40H3502	R40H3503

9 - 6 Stud, Dayton Rotor, Hat Style
53 - Power Brakes
214 - Power Brakes, Split System
37 - Also available as a New unit
186 - 10 Stud
221 - Power Brakes, 17,500 or 18,500 lb. Rear Axle
41 - Aluminum piston
188 - 6 Stud, 9.251" Hub
222 - Power Brakes, 18,500 or 22,000 lb. Rear Axle

MERITOR DRUM OR ROTOR NO.	CALIPER OR CYLINDER BORE SIZE	MERITOR CALIPER OR WHEEL CYLINDER (LEFT)	MERITOR CALIPER OR WHEEL CYLINDER (RIGHT)	MERITOR CALIPER OR WHEEL CYLINDER REPAIR KIT	MERITOR CALIPER PISTON	MERITOR MASTER CYLINDER	MERITOR MASTER CYLINDER KIT	MERITOR BRAKE HOSE (LEFT)	MERITOR BRAKE HOSE (RIGHT)
									FORD(Cont.)
LN800 SERIES: LOUISVILLE 94.4 BBC SHORT CONVENTIONAL CHASSIS CAB(Cont.)									
N/A	1-5/8 "	201185	201186[329]	SP7895S	NR	-	-	R4577147	R4577147
N/A	1-5/8 "	201181	201182	SP7895S	NR	-	-	R4577147	R4577147
N/A	1.09375	R4133484	R4133485	R4166819	NR	R4111629[53]	R4122484	R4577460	R4577460
N/A	1-1/8 "	R4133714	R4133715	R4166926	NR	R4111995[53]	-	R4577454	R4577455
N/A	1-1/8 "	R4133716	R4133717	R4166926	NR	R4111772[53]	R4122488	R4577454	R4577455
N/A	1-1/8 "	R4133719	R4133718	R4166926	NR	R4111634[53]	N/A	R4577452	R4577453
N/A	1-1/8 "	R4133714	R4133715	R4166926	NR	R4111631[221]	R4122486	R4577452	R4577453
23-122700-002[9]	2-1/2 "	R424244X	R424244X[37]	60050266	69270757[41]	R4111992[214]	R4122386	R4577452	R4577453
23-122691-002[188]	2-7/8 "	60050145X	60050145X[37]	60050146	69270702[41]	R4111992[214]	R4122386	R4577452	R4577453
23-122703-002[186]	2-7/8 "	60050145X	60050145X[37]	60050146	69270702[41]	R4111992[214]	R4122386	R4577452	R4577453
N/A	1-1/4 "	R4133581	R4133581	R4166923	NR	R4111992[214]	R4122386	R4577452	R4577453
N/A	1-1/4 "	R4133720	R4133721	R4166923	NR	R4111630[222]	N/A	R4577452	R4577453
N/A	1-1/2 "	R4033607	R4033607	R4166818	NR	-	-	R4577147	R4577147
N/A	1-5/8 "	R4133338	R4133338	R4166689	NR	-	-	R4577147	R4577147
N/A	1-5/8 "	R4133338	R4133338	R4166689	NR	-	-	R4577147	R4577147
N/A	1-3/4 "	R4133400	R4133400	R4166917	NR	-	-	R4577147	R4577147
N/A	1-5/8 "	201181	201182	SP7895S	NR	-	-	R4577147	R4577147
N/A	1-5/8 "	201185	201186[329]	SP7895S	NR	-	-	R4577147	R4577147
N/A	1-5/8 "	201185	201186[329]	SP7895S	NR	-	-	R4577147	R4577147
N/A	1-5/8 "	201181	201182	SP7895S	NR	-	-	R4577147	R4577147
N/A	1.09375	R4133484	R4133485	R4166819	NR	R4111629[53]	R4122484	R4577460	R4577460
N/A	1-1/8 "	R4133714	R4133715	R4166926	NR	R4111631[221]	R4122486	R4577452	R4577453
N/A	1-1/8 "	R4133719	R4133718	R4166926	NR	R4111634[53]	N/A	R4577452	R4577453
N/A	1-1/8 "	R4133714	R4133715	R4166926	NR	R4111995[53]	-	R4577454	R4577455
N/A	1-1/8 "	R4133716	R4133717	R4166926	NR	R4111772[53]	R4122488	R4577454	R4577455
23-122700-002[9]	2-1/2 "	R424244X	R424244X[37]	60050266	69270757[41]	R4111992[214]	R4122386	R4577452	R4577453
23-122703-002[186]	2-7/8 "	60050145X	60050145X[37]	60050146	69270702[41]	R4111992[214]	R4122386	R4577452	R4577453
23-122691-002[188]	2-7/8 "	60050145X	60050145X[37]	60050146	69270702[41]	R4111992[214]	R4122386	R4577452	R4577453
N/A	1-1/4 "	R4133720	R4133721	R4166923	NR	R4111630[222]	N/A	R4577452	R4577453
N/A	1-1/4 "	R4133581	R4133581	R4166923	NR	R4111992[214]	R4122386	R4577452	R4577453
N/A	1-1/2 "	R4033607	R4033607	R4166818	NR	-	-	R4577147	R4577147
N/A	1-5/8 "	R4133338	R4133338	R4166689	NR	-	-	R4577147	R4577147
N/A	1-5/8 "	R4133338	R4133338	R4166689	NR	-	-	R4577147	R4577147
N/A	1-3/4 "	R4133400	R4133400	R4166917	NR	-	-	R4577147	R4577147
N/A	1-5/8 "	201181	201182	SP7895S	NR	-	-	R4577147	R4577147
N/A	1-5/8 "	201185	201186[329]	SP7895S	NR	-	-	R4577147	R4577147
N/A	1-5/8 "	201185	201186[329]	SP7895S	NR	-	-	R4577147	R4577147
N/A	1-5/8 "	201181	201182	SP7895S	NR	-	-	R4577147	R4577147
N/A	1.09375	R4133484	R4133485	R4166819	NR	R4111629[53]	R4122484	R4577460	R4577460
N/A	1-1/8 "	R4133714	R4133715	R4166926	NR	R4111631[221]	R4122486	R4577452	R4577453
N/A	1-1/8 "	R4133714	R4133715	R4166926	NR	R4111995[53]	-	R4577454	R4577455
N/A	1-1/8 "	R4133716	R4133717	R4166926	NR	R4111772[53]	R4122488	R4577454	R4577455
N/A	1-1/8 "	R4133719	R4133718	R4166926	NR	R4111634[53]	N/A	R4577452	R4577453
23-122700-002[9]	2-1/2 "	R424244X	R424244X[37]	60050266	69270757[41]	R4111992[214]	R4122386	R4577452	R4577453
23-122691-002[188]	2-7/8 "	60050145X	60050145X[37]	60050146	69270702[41]	R4111992[214]	R4122386	R4577452	R4577453
23-122703-002[186]	2-7/8 "	60050145X	60050145X[37]	60050146	69270702[41]	R4111992[214]	R4122386	R4577452	R4577453
N/A	1-1/4 "	R4133581	R4133581	R4166923	NR	R4111992[214]	R4122386	R4577452	R4577453
N/A	1-1/4 "	R4133720	R4133721	R4166923	NR	R4111630[222]	N/A	R4577452	R4577453
N/A	1-1/2 "	R4033607	R4033607	R4166818	NR	-	-	R4577147	R4577147
N/A	1-5/8 "	R4133338	R4133338	R4166689	NR	-	-	R4577147	R4577147
N/A	1-5/8 "	R4133338	R4133338	R4166689	NR	-	-	R4577147	R4577147
N/A	1-3/4 "	R4133400	R4133400	R4166917	NR	-	-	R4577147	R4577147
N/A	1-5/8 "	201185	201186[329]	SP7895S	NR	-	-	R4577147	R4577147
N/A	1-5/8 "	201181	201182	SP7895S	NR	-	-	R4577147	R4577147
N/A	1-5/8 "	201181	201182	SP7895S	NR	-	-	R4577147	R4577147
N/A	1-5/8 "	201185	201186[329]	SP7895S	NR	-	-	R4577147	R4577147
N/A	1.09375	R4133484	R4133485	R4166819	NR	R4111629[53]	R4122484	R4577460	R4577460
N/A	1-1/8 "	R4133714	R4133715	R4166926	NR	R4111631[221]	R4122486	R4577452	R4577453
N/A	1-1/8 "	R4133714	R4133715	R4166926	NR	R4111995[53]	-	R4577454	R4577455
N/A	1-1/8 "	R4133719	R4133718	R4166926	NR	R4111634[53]	N/A	R4577452	R4577453

329 - Forward

340 - Use 69160457 for Disc Pad Retainer Clip

341 - Use 69160445 for Disc Pad Retainer Clip

MAKE MODEL YEAR AXLE CODE AXLE WEIGHT	AXLE & BRK. TYPE	BRK. MFG.	BRAKE SIZE	FMSI	MERITOR DISC PAD OR BRAKE SHOE	MERITOR GUIDE PIN OR RETURN SPRING KIT	MERITOR CALIPER HWD. KIT OR RETURN SPRING KIT	MERITOR ADJUSTER KIT (LEFT WHEEL)	MERITOR ADJUSTER KIT (RIGHT WHEEL)
FORD(Cont.)									
LN800 SERIES: LOUISVILLE 94.4 BBC SHORT CONVENTIONAL CHASSIS CAB(Cont.)									
1973									
	Fa	WG	15 " x 3 "	1245C - 321	R700321	R40H521	R40H9237	R40H3502	R40H3503
	Fd	DN		7141 - D224	MD224[340]	69310693	60050153	NR	NR
F080, F090	Fd	DN		7149 - D236	MD236[341]	69310693	R40H5523	NR	NR
	Fd	DN		7149 - D236	MD236[341]	69310693	R40H5523	NR	NR
F090, F120	Fa	WG	15 " x 3 "	1245C - 321	R700321	R40H521	R40H9237	R40H3502	R40H3503
	Fa	WG	15 " x 3 "	1245C - 321	R700321	R40H521	R40H9237	R40H3502	R40H3503
R170, R175	Ra	KH	15 " x 5 "	4646 - 400	R700400	R40H595	R40H9220	R40H3538	R40H3539
	Ra	WG	15 " x 5 "	1252 - 346	R700346	R40H597	R40H9200	R40H3540	R40H3541
R185	Ra	WG	15 " x 6 "	4596 - 381	R700381	R40H597	R40H9200	R40H3540	R40H3541
	Ra	WG	15 " x 7 "	4597 - 383	R700383	R40H597	R40H9200	R40H3540	R40H3541
LNT700 SERIES: LOUISVILLE 94.4 BBC SHORT CONVENTIONAL CHASSIS CAB, TANDEM AXLE									
1995									
	Fd	DN		7149 - D236	MD236[341]	69310693	69310782	NR	NR
	Fd	DN		7141 - D224	MD224[340]	69310693	60050153	NR	NR
	Fd	DN		7149 - D236	MD236[341]	69310693	69310782	NR	NR
	Fd	DN		7149 - D236	MD236[341]	69310693	69310782	NR	NR
	Ra	LG	15 " x 5 "	4528A - 542	N/A	R40H618	NR	SP7888S	SP7888S
	Ra	LG	15 " x 5 "	4528A - 542	N/A	R40H618	NR	NR	NR
	Ra	LG	15 " x 6 "	4504A - 543	N/A	R40H618	NR	SP7887S	SP7887S
	Ra	LG	15 " x 6 "	4504A - 543	N/A	R40H618	NR	NR	NR
	Ra	LG	15 " x 7 "	4505A - 544	N/A	R40H618	NR	SP7887S	SP7887S
	Ra	LG	15 " x 7 "	4505A - 544	N/A	R40H618	NR	NR	NR
1994									
	Fd	DN		7149 - D236	MD236[341]	69310693	69310782	NR	NR
	Fd	DN		7149 - D236	MD236[341]	69310693	69310782	NR	NR
	Fd	DN		7149 - D236	MD236[341]	69310693	69310782	NR	NR
	Fd	DN		7141 - D224	MD224[340]	69310693	60050153	NR	NR
	Ra	LG	15 " x 5 "	4528A - 542	N/A	R40H618	NR	SP7888S	SP7888S
	Ra	LG	15 " x 5 "	4528A - 542	N/A	R40H618	NR	NR	NR
	Ra	LG	15 " x 6 "	4504A - 543	N/A	R40H618	NR	NR	NR
	Ra	LG	15 " x 6 "	4504A - 543	N/A	R40H618	NR	SP7887S	SP7887S
	Ra	LG	15 " x 7 "	4505A - 544	N/A	R40H618	NR	NR	NR
	Ra	LG	15 " x 7 "	4505A - 544	N/A	R40H618	NR	SP7887S	SP7887S
1993									
	Fd	DN		7149 - D236	MD236[341]	69310693	69310782	NR	NR
	Fd	DN		7149 - D236	MD236[341]	69310693	69310782	NR	NR
	Fd	DN		7149 - D236	MD236[341]	69310693	69310782	NR	NR
	Fd	DN		7141 - D224	MD224[340]	69310693	60050153	NR	NR
	Ra	LG	15 " x 5 "	4528A - 542	N/A	R40H618	NR	SP7888S	SP7888S
	Ra	LG	15 " x 5 "	4528A - 542	N/A	R40H618	NR	NR	NR
	Ra	LG	15 " x 6 "	4504A - 543	N/A	R40H618	NR	SP7887S	SP7887S
	Ra	LG	15 " x 6 "	4504A - 543	N/A	R40H618	NR	NR	NR
	Ra	LG	15 " x 7 "	4505A - 544	N/A	R40H618	NR	NR	NR
	Ra	LG	15 " x 7 "	4505A - 544	N/A	R40H618	NR	SP7887S	SP7887S
1992									
	Fd	DN		7149 - D236	MD236[341]	69310693	69310782	NR	NR
	Fd	DN		7141 - D224	MD224[340]	69310693	60050153	NR	NR
	Fd	DN		7149 - D236	MD236[341]	69310693	69310782	NR	NR
	Fd	DN		7149 - D236	MD236[341]	69310693	69310782	NR	NR
	Ra	LG	15 " x 5 "	4528A - 542	N/A	R40H618	NR	SP7888S	SP7888S
	Ra	LG	15 " x 5 "	4528A - 542	N/A	R40H618	NR	NR	NR
	Ra	LG	15 " x 6 "	4504A - 543	N/A	R40H618	NR	SP7887S	SP7887S
	Ra	LG	15 " x 6 "	4504A - 543	N/A	R40H618	NR	NR	NR
	Ra	LG	15 " x 7 "	4505A - 544	N/A	R40H618	NR	NR	NR
	Ra	LG	15 " x 7 "	4505A - 544	N/A	R40H618	NR	SP7887S	SP7887S
1991									
	Fd	DN		7149 - D236	MD236[341]	69310693	69310782	NR	NR
	Fd	DN		7141 - D224	MD224[340]	69310693	60050153	NR	NR
	Fd	DN		7149 - D236	MD236[341]	69310693	69310782	NR	NR
	Fd	DN		7149 - D236	MD236[341]	69310693	69310782	NR	NR
	Ra	LG	15 " x 5 "	4528A - 542	N/A	R40H618	NR	NR	NR
	Ra	LG	15 " x 5 "	4528A - 542	N/A	R40H618	NR	SP7888S	SP7888S
	Ra	LG	15 " x 6 "	4504A - 543	N/A	R40H618	NR	SP7887S	SP7887S

9 - 6 Stud, Dayton Rotor, Hat Style
53 - Power Brakes
188 - 6 Stud, 9.251" Hub

37 - Also available as a New unit
186 - 10 Stud
204 - Right Hand; use E-4057 for Left Hand Expander Kits

41 - Aluminum piston
187 - 6 Stud, 6.443" Hub
214 - Power Brakes, Split System

MERITOR DRUM OR ROTOR NO.	CALIPER OR CYLINDER BORE SIZE	MERITOR CALIPER OR WHEEL CYLINDER (LEFT)	MERITOR CALIPER OR WHEEL CYLINDER (RIGHT)	MERITOR CALIPER OR WHEEL CYLINDER REPAIR KIT	MERITOR CALIPER PISTON	MERITOR MASTER CYLINDER	MERITOR MASTER CYLINDER KIT	MERITOR BRAKE HOSE (LEFT)	MERITOR BRAKE HOSE (RIGHT)
									FORD(Cont.)
LN800 SERIES: LOUISVILLE 94.4 BBC SHORT CONVENTIONAL CHASSIS CAB(Cont.)									
N/A	1-1/8 "	R4133716	R4133717	R4166926	NR	R4111772[53]	R4122488	R4577454	R4577455
23-122700-002[9]	2-1/2 "	R424244X	R424244X[37]	60050266	69270757[41]	R4111992[214]	R4122386	R4577452	R4577453
23-122691-002[188]	2-7/8 "	60050145X	60050145X[37]	60050146	69270702[41]	R4111992[214]	R4122386	R4577452	R4577453
23-122703-002[186]	2-7/8 "	60050145X	60050145X[37]	60050146	69270702[41]	R4111992[214]	R4122386	R4577452	R4577453
N/A	1-1/4 "	R4133720	R4133721	R4166923	NR	R4111630[222]	N/A	R4577452	R4577453
N/A	1-1/4 "	R4133581	R4133581	R4166923	NR	R4111992[214]	R4122386	R4577452	R4577453
N/A	1-1/2 "	R4033607	R4033607	R4166818	NR	-	-	R4577147	R4577147
N/A	1-5/8 "	R4133338	R4133338	R4166689	NR	-	-	R4577147	R4577147
N/A	1-5/8 "	R4133338	R4133338	R4166689	NR	-	-	R4577147	R4577147
N/A	1-3/4 "	R4133400	R4133400	R4166917	NR	-	-	R4577147	R4577147
LNT700 SERIES: LOUISVILLE 94.4 BBC SHORT CONVENTIONAL CHASSIS CAB, TANDEM AXLE									
23-122743-002[187]	2-7/8 "	60050145X	60050145X[37]	60050146	69270702[41]	-	-	R4577461	R4577461
23-122700-002[9]	2-1/2 "	R424244X	R424244X[37]	60050266	69270757[41]	-	-	R4577461	R4577461
23-122703-002[186]	2-7/8 "	60050145X	60050145X[37]	60050146	69270702[41]	-	-	R4577461	R4577461
23-122691-002[188]	2-7/8 "	60050145X	60050145X[37]	60050146	69270702[41]	-	-	R4577461	R4577461
N/A	1-5/8 "	201185	201186[329]	SP7895S	NR	-	-	R4577870	R4577870
N/A	1-5/8 "	201181	201182	SP7895S	NR	-	-	R4577870	R4577870
N/A	1-3/4 "	201183X	201184X[329]	SP7873S	NR	-	-	R4577870	R4577870
N/A	1-3/4 "	201179X	201180X	SP7873S	SP7880S[204]	-	-	R4577870	R4577870
N/A	1-3/4 "	201183X	201184X[329]	SP7873S	NR	-	-	R4577870	R4577870
N/A	1-3/4 "	201179X	201180X	SP7873S	SP7880S[204]	-	-	R4577870	R4577870
23-122691-002[188]	2-7/8 "	60050145X	60050145X[37]	60050146	69270702[41]	-	-	R4577461	R4577461
23-122703-002[186]	2-7/8 "	60050145X	60050145X[37]	60050146	69270702[41]	-	-	R4577461	R4577461
23-122743-002[187]	2-7/8 "	60050145X	60050145X[37]	60050146	69270702[41]	-	-	R4577461	R4577461
23-122700-002[9]	2-1/2 "	R424244X	R424244X[37]	60050266	69270757[41]	-	-	R4577461	R4577461
N/A	1-5/8 "	201185	201186[329]	SP7895S	NR	-	-	R4577870	R4577870
N/A	1-5/8 "	201181	201182	SP7895S	NR	-	-	R4577870	R4577870
N/A	1-3/4 "	201179X	201180X	SP7873S	SP7880S[204]	-	-	R4577870	R4577870
N/A	1-3/4 "	201183X	201184X[329]	SP7873S	NR	-	-	R4577870	R4577870
N/A	1-3/4 "	201179X	201180X	SP7873S	SP7880S[204]	-	-	R4577870	R4577870
N/A	1-3/4 "	201183X	201184X[329]	SP7873S	NR	-	-	R4577870	R4577870
23-122703-002[186]	2-7/8 "	60050145X	60050145X[37]	60050146	69270702[41]	-	-	R4577461	R4577461
23-122743-002[187]	2-7/8 "	60050145X	60050145X[37]	60050146	69270702[41]	-	-	R4577461	R4577461
23-122691-002[188]	2-7/8 "	60050145X	60050145X[37]	60050146	69270702[41]	-	-	R4577461	R4577461
23-122700-002[9]	2-1/2 "	R424244X	R424244X[37]	60050266	69270757[41]	-	-	R4577461	R4577461
N/A	1-5/8 "	201185	201186[329]	SP7895S	NR	-	-	R4577870	R4577870
N/A	1-5/8 "	201181	201182	SP7895S	NR	-	-	R4577870	R4577870
N/A	1-3/4 "	201183X	201184X[329]	SP7873S	NR	-	-	R4577870	R4577870
N/A	1-3/4 "	201179X	201180X	SP7873S	SP7880S[204]	-	-	R4577870	R4577870
N/A	1-3/4 "	201179X	201180X	SP7873S	SP7880S[204]	-	-	R4577870	R4577870
N/A	1-3/4 "	201183X	201184X[329]	SP7873S	NR	-	-	R4577870	R4577870
23-122691-002[188]	2-7/8 "	60050145X	60050145X[37]	60050146	69270702[41]	-	-	R4577461	R4577461
23-122700-002[9]	2-1/2 "	R424244X	R424244X[37]	60050266	69270757[41]	-	-	R4577461	R4577461
23-122703-002[186]	2-7/8 "	60050145X	60050145X[37]	60050146	69270702[41]	-	-	R4577461	R4577461
23-122743-002[187]	2-7/8 "	60050145X	60050145X[37]	60050146	69270702[41]	-	-	R4577461	R4577461
N/A	1-5/8 "	201185	201186[329]	SP7895S	NR	-	-	R4577870	R4577870
N/A	1-5/8 "	201181	201182	SP7895S	NR	-	-	R4577870	R4577870
N/A	1-3/4 "	201183X	201184X[329]	SP7873S	NR	-	-	R4577870	R4577870
N/A	1-3/4 "	201179X	201180X	SP7873S	SP7880S[204]	-	-	R4577870	R4577870
N/A	1-3/4 "	201179X	201180X	SP7873S	SP7880S[204]	-	-	R4577870	R4577870
N/A	1-3/4 "	201183X	201184X[329]	SP7873S	NR	-	-	R4577870	R4577870
23-122743-002[187]	2-7/8 "	60050145X	60050145X[37]	60050146	69270702[41]	-	-	R4577461	R4577461
23-122700-002[9]	2-1/2 "	R424244X	R424244X[37]	60050266	69270757[41]	-	-	R4577461	R4577461
23-122691-002[188]	2-7/8 "	60050145X	60050145X[37]	60050146	69270702[41]	-	-	R4577461	R4577461
23-122703-002[186]	2-7/8 "	60050145X	60050145X[37]	60050146	69270702[41]	-	-	R4577461	R4577461
N/A	1-5/8 "	201181	201182	SP7895S	NR	-	-	R4577870	R4577870
N/A	1-5/8 "	201185	201186[329]	SP7895S	NR	-	-	R4577870	R4577870
N/A	1-3/4 "	201183X	201184X[329]	SP7873S	NR	-	-	R4577870	R4577870

222 - Power Brakes, 18,500 or 22,000 lb. Rear Axle
329 - Forward
340 - Use 69160457 for Disc Pad Retainer Clip
341 - Use 69160445 for Disc Pad Retainer Clip

MAKE MODEL YEAR AXLE CODE AXLE WEIGHT	AXLE & BRK. TYPE	BRK. MFG.	BRAKE SIZE	FMSI	MERITOR DISC PAD OR BRAKE SHOE	MERITOR GUIDE PIN OR RETURN SPRING KIT	MERITOR CALIPER HWD. KIT OR RETURN SPRING KIT	MERITOR ADJUSTER KIT (LEFT WHEEL)	MERITOR ADJUSTER KIT (RIGHT WHEEL)
FORD(Cont.)									
LNT700 SERIES: LOUISVILLE 94.4 BBC SHORT CONVENTIONAL CHASSIS CAB, TANDEM AXLE(Cont.)									
1991									
	Ra	LG	15 " x 6 "	4504A - 543	N/A	R40H618	NR	NR	NR
	Ra	LG	15 " x 7 "	4505A - 544	N/A	R40H618	NR	SP7887S	SP7887S
	Ra	LG	15 " x 7 "	4505A - 544	N/A	R40H618	NR	NR	NR
1990									
	Fd	DN		7149 - D236	MD236[341]	69310693	69310782	NR	NR
	Fd	DN		7149 - D236	MD236[341]	69310693	69310782	NR	NR
	Fd	DN		7149 - D236	MD236[341]	69310693	69310782	NR	NR
	Fd	DN		7141 - D224	MD224[340]	69310693	60050153	NR	NR
	Ra	LG	15 " x 5 "	4528A - 542	N/A	R40H618	NR	NR	NR
	Ra	LG	15 " x 5 "	4528A - 542	N/A	R40H618	NR	SP7888S	SP7888S
	Ra	LG	15 " x 6 "	4504A - 543	N/A	R40H618	NR	SP7887S	SP7887S
	Ra	LG	15 " x 6 "	4504A - 543	N/A	R40H618	NR	NR	NR
	Ra	LG	15 " x 7 "	4505A - 544	N/A	R40H618	NR	NR	NR
	Ra	LG	15 " x 7 "	4505A - 544	N/A	R40H618	NR	SP7887S	SP7887S
1989									
	Fd	DN		7149 - D236	MD236[341]	69310693	69310782[43]	NR	NR
	Fd	DN		7141 - D224	MD224[340]	69310693	60050153	NR	NR
	Fd	DN		7149 - D236	MD236[341]	69310693	69310782[43]	NR	NR
	Fd	DN		7149 - D236	MD236[341]	69310693	69310782[43]	NR	NR
	Ra	LG	15 " x 5 "	4528A - 542	N/A	R40H618	NR	SP7888S	SP7888S
	Ra	LG	15 " x 5 "	4528A - 542	N/A	R40H618	NR	NR	NR
	Ra	LG	15 " x 6 "	4504A - 543	N/A	R40H618	NR	NR	NR
	Ra	LG	15 " x 6 "	4504A - 543	N/A	R40H618	NR	SP7887S	SP7887S
	Ra	LG	15 " x 7 "	4505A - 544	N/A	R40H618	NR	SP7887S	SP7887S
	Ra	LG	15 " x 7 "	4505A - 544	N/A	R40H618	NR	NR	NR
1988									
	Fd	DN		7141 - D224	MD224[340]	69310693	60050153	NR	NR
	Fd	DN		7149 - D236	MD236[341]	69310693	69310782[43]	NR	NR
	Fd	DN		7149 - D236	MD236[341]	69310693	69310782[43]	NR	NR
	Fd	DN		7149 - D236	MD236[341]	69310693	69310782[43]	NR	NR
	Ra	LG	15 " x 5 "	4528A - 542	N/A	R40H618	NR	SP7888S	SP7888S
	Ra	LG	15 " x 5 "	4528A - 542	N/A	R40H618	NR	NR	NR
	Ra	LG	15 " x 6 "	4504A - 543	N/A	R40H618	NR	NR	NR
	Ra	LG	15 " x 6 "	4504A - 543	N/A	R40H618	NR	SP7887S	SP7887S
	Ra	LG	15 " x 7 "	4505A - 544	N/A	R40H618	NR	SP7887S	SP7887S
	Ra	LG	15 " x 7 "	4505A - 544	N/A	R40H618	NR	NR	NR
1987									
	Fd	DN		7141 - D224	MD224[340]	69310693	60050153	NR	NR
	Fd	DN		7149 - D236	MD236[341]	69310693	69310782[43]	NR	NR
	Fd	DN		7149 - D236	MD236[341]	69310693	69310782[43]	NR	NR
	Fd	DN		7149 - D236	MD236[341]	69310693	69310782[43]	NR	NR
	Ra	LG	15 " x 5 "	4528A - 542	N/A	R40H618	NR	NR	NR
	Ra	LG	15 " x 5 "	4528A - 542	N/A	R40H618	NR	SP7888S	SP7888S
	Ra	LG	15 " x 6 "	4504A - 543	N/A	R40H618	NR	NR	NR
	Ra	LG	15 " x 6 "	4504A - 543	N/A	R40H618	NR	SP7887S	SP7887S
	Ra	LG	15 " x 7 "	4505A - 544	N/A	R40H618	NR	SP7887S	SP7887S
	Ra	LG	15 " x 7 "	4505A - 544	N/A	R40H618	NR	NR	NR
1986									
	Fd	DN		7149 - D236	MD236[341]	69310693	69310782	NR	NR
	Fd	DN		7149 - D236	MD236[341]	69310693	69310782	NR	NR
	Fd	DN		7149 - D236	MD236[341]	69310693	69310782	NR	NR
	Fd	DN		7141 - D224	MD224[340]	69310693	60050153	NR	NR
	Ra	LG	15 " x 5 "	4528A - 542	N/A	R40H618	NR	SP7888S	SP7888S
	Ra	LG	15 " x 5 "	4528A - 542	N/A	R40H618	NR	NR	NR
	Ra	LG	15 " x 6 "	4504A - 543	N/A	R40H618	NR	SP7887S	SP7887S
	Ra	LG	15 " x 6 "	4504A - 543	N/A	R40H618	NR	NR	NR
	Ra	LG	15 " x 6 "	4504A - 543	N/A	R40H618	NR	NR	NR
	Ra	LG	15 " x 6 "	4504A - 543	N/A	R40H618	NR	SP7887S	SP7887S
	Ra	LG	15 " x 7 "	4505A - 544	N/A	R40H618	NR	NR	NR
	Ra	LG	15 " x 7 "	4505A - 544	N/A	R40H618	NR	SP7887S	SP7887S
	Ra	LG	15 " x 7 "	4505A - 544	N/A	R40H618	NR	NR	NR
	Ra	LG	15 " x 7 "	4505A - 544	N/A	R40H618	NR	SP7887S	SP7887S
F050, F055, F060	Fa	KH	14 " x 2-1/2 "	2060 - 361	Discontinued	R40H596	R40H9219	R40H3536	R40H3537
F070	Fa	WG	15 " x 3 "	1245C - 321	R700321	R40H521	R40H9237	R40H3502	R40H3503

9 - 6 Stud, Dayton Rotor, Hat Style
43 - For Applications Taking A Longer Shim, Use R404151706
187 - 6 Stud, 6.443" Hub
37 - Also available as a New unit
53 - Power Brakes
188 - 6 Stud, 9.251" Hub
41 - Aluminum piston
186 - 10 Stud
204 - Right Hand; use E-4057 for Left Hand Expander Kits

MERITOR DRUM OR ROTOR NO.	CALIPER OR CYLINDER BORE SIZE	MERITOR CALIPER OR WHEEL CYLINDER (LEFT)	MERITOR CALIPER OR WHEEL CYLINDER (RIGHT)	MERITOR CALIPER OR WHEEL CYLINDER REPAIR KIT	MERITOR CALIPER PISTON	MERITOR MASTER CYLINDER	MERITOR MASTER CYLINDER KIT	MERITOR BRAKE HOSE (LEFT)	MERITOR BRAKE HOSE (RIGHT)
									FORD(Cont.)
LNT700 SERIES: LOUISVILLE 94.4 BBC SHORT CONVENTIONAL CHASSIS CAB, TANDEM AXLE(Cont.)									
N/A	1-3/4 "	201179X	201180X	SP7873S	SP7880S[204]	-	-	R4577870	R4577870
N/A	1-3/4 "	201183X	201184X[329]	SP7873S	NR	-	-	R4577870	R4577870
N/A	1-3/4 "	201179X	201180X	SP7873S	SP7880S[204]	-	-	R4577870	R4577870
23-122743-002[187]	2-7/8 "	60050145X	60050145X[37]	60050146	69270702[41]	R4111999[53]	R4122386	R4577461	R4577461
23-122691-002[188]	2-7/8 "	60050145X	60050145X[37]	60050146	69270702[41]	R4111999[53]	R4122386	R4577461	R4577461
23-122703-002[186]	2-7/8 "	60050145X	60050145X[37]	60050146	69270702[41]	R4111999[53]	R4122386	R4577461	R4577461
23-122700-002[9]	2-1/2 "	R424244X	R424244X[37]	60050266	69270757[41]	R4111999[53]	R4122386	R4577461	R4577461
N/A	1-5/8 "	201181	201182	SP7895S	NR	-	-	R4577870	R4577870
N/A	1-5/8 "	201185	201186[329]	SP7895S	NR	-	-	R4577870	R4577870
N/A	1-3/4 "	201183X	201184X[329]	SP7873S	NR	-	-	R4577870	R4577870
N/A	1-3/4 "	201179X	201180X	SP7873S	SP7880S[204]	-	-	R4577870	R4577870
N/A	1-3/4 "	201179X	201180X	SP7873S	SP7880S[204]	-	-	R4577870	R4577870
N/A	1-3/4 "	201183X	201184X[329]	SP7873S	NR	-	-	R4577870	R4577870
23-122691-002[188]	2-7/8 "	60050145X	60050145X[37]	60050146	69270702[41]	R4111999[53]	R4122386	R4577461	R4577461
23-122700-002[9]	2-1/2 "	R424244X	R424244X[37]	60050266	69270757[41]	R4111999[53]	R4122386	R4577461	R4577461
23-122743-002[187]	2-7/8 "	60050145X	60050145X[37]	60050146	69270702[41]	R4111999[53]	R4122386	R4577461	R4577461
23-122703-002[186]	2-7/8 "	60050145X	60050145X[37]	60050146	69270702[41]	R4111999[53]	R4122386	R4577461	R4577461
N/A	1-5/8 "	201185	201186[329]	SP7895S	NR	-	-	N/A	N/A
N/A	1-5/8 "	201181	201182	SP7895S	NR	-	-	N/A	N/A
N/A	1-3/4 "	201179X	201180X	SP7873S	SP7880S[204]	-	-	N/A	N/A
N/A	1-3/4 "	201183X	201184X[329]	SP7873S	NR	-	-	N/A	N/A
N/A	1-3/4 "	201183X	201184X[329]	SP7873S	NR	-	-	N/A	N/A
N/A	1-3/4 "	201179X	201180X	SP7873S	SP7880S[204]	-	-	N/A	N/A
23-122700-002[9]	2-1/2 "	R424244X	R424244X[37]	60050266	69270757[41]	R4111999[53]	R4122386	R4577461	R4577461
23-122743-002[187]	2-7/8 "	60050145X	60050145X[37]	60050146	69270702[41]	R4111999[53]	R4122386	R4577461	R4577461
23-122703-002[186]	2-7/8 "	60050145X	60050145X[37]	60050146	69270702[41]	R4111999[53]	R4122386	R4577461	R4577461
23-122691-002[188]	2-7/8 "	60050145X	60050145X[37]	60050146	69270702[41]	R4111999[53]	R4122386	R4577461	R4577461
N/A	1-5/8 "	201185	201186[329]	SP7895S	NR	-	-	N/A	N/A
N/A	1-5/8 "	201181	201182	SP7895S	NR	-	-	N/A	N/A
N/A	1-3/4 "	201179X	201180X	SP7873S	SP7880S[204]	-	-	N/A	N/A
N/A	1-3/4 "	201183X	201184X[329]	SP7873S	NR	-	-	N/A	N/A
N/A	1-3/4 "	201183X	201184X[329]	SP7873S	NR	-	-	N/A	N/A
N/A	1-3/4 "	201179X	201180X	SP7873S	SP7880S[204]	-	-	N/A	N/A
23-122700-002[9]	2-1/2 "	R424244X	R424244X[37]	60050266	69270757[41]	R4111999[53]	R4122386	R4577461	R4577461
23-122691-002[188]	2-7/8 "	60050145X	60050145X[37]	60050146	69270702[41]	R4111999[53]	R4122386	R4577461	R4577461
23-122743-002[187]	2-7/8 "	60050145X	60050145X[37]	60050146	69270702[41]	R4111999[53]	R4122386	R4577461	R4577461
23-122703-002[186]	2-7/8 "	60050145X	60050145X[37]	60050146	69270702[41]	R4111999[53]	R4122386	R4577461	R4577461
N/A	1-5/8 "	201181	201182	SP7895S	NR	-	-	N/A	N/A
N/A	1-5/8 "	201185	201186[329]	SP7895S	NR	-	-	N/A	N/A
N/A	1-3/4 "	201179X	201180X	SP7873S	SP7880S[204]	-	-	N/A	N/A
N/A	1-3/4 "	201183X	201184X[329]	SP7873S	NR	-	-	N/A	N/A
N/A	1-3/4 "	201183X	201184X[329]	SP7873S	NR	-	-	N/A	N/A
N/A	1-3/4 "	201179X	201180X	SP7873S	SP7880S[204]	-	-	N/A	N/A
23-122703-002[186]	2-7/8 "	60050145X	60050145X[37]	60050146	69270702[41]	R4111999[53]	R4122386	R4577461	R4577461
23-122743-002[187]	2-7/8 "	60050145X	60050145X[37]	60050146	69270702[41]	R4111999[53]	R4122386	R4577461	R4577461
23-122691-002[188]	2-7/8 "	60050145X	60050145X[37]	60050146	69270702[41]	R4111999[53]	R4122386	R4577461	R4577461
23-122700-002[9]	2-1/2 "	R424244X	R424244X[37]	60050266	69270757[41]	R4111999[53]	R4122386	R4577461	R4577461
N/A	1-5/8 "	201185	201186[329]	SP7895S	NR	-	-	N/A	N/A
N/A	1-5/8 "	201181	201182	SP7895S	NR	-	-	N/A	N/A
N/A	1-3/4 "	201183X	201184X[329]	SP7873S	NR	-	-	N/A	N/A
N/A	1-3/4 "	201179X	201180X	SP7873S	SP7880S[204]	-	-	N/A	N/A
N/A	1-3/4 "	201179X	201180X	SP7873S	SP7880S[204]	-	-	N/A	N/A
N/A	1-3/4 "	201183X	201184X[329]	SP7873S	NR	-	-	N/A	N/A
N/A	1-3/4 "	201179X	201180X	SP7873S	SP7880S[204]	-	-	N/A	N/A
N/A	1-3/4 "	201183X	201184X[329]	SP7873S	NR	-	-	N/A	N/A
N/A	1-3/4 "	201179X	201180X	SP7873S	SP7880S[204]	-	-	N/A	N/A
N/A	1-3/4 "	201183X	201184X[329]	SP7873S	NR	-	-	N/A	N/A
N/A	1.09375	R4133484	R4133485	R4166819	NR	-	-	-	-
N/A	1-1/8 "	R4133716	R4133717	R4166926	NR	-	-	-	-

329 - Forward

340 - Use 69160457 for Disc Pad Retainer Clip

341 - Use 69160445 for Disc Pad Retainer Clip

MAKE MODEL YEAR AXLE CODE AXLE WEIGHT	AXLE & BRK. TYPE	BRK. MFG.	BRAKE SIZE	FMSI	MERITOR DISC PAD OR BRAKE SHOE	MERITOR GUIDE PIN OR RETURN SPRING KIT	MERITOR CALIPER HWD. KIT OR RETURN SPRING KIT	MERITOR ADJUSTER KIT (LEFT WHEEL)	MERITOR ADJUSTER KIT (RIGHT WHEEL)
FORD(Cont.)									
LNT700 SERIES: LOUISVILLE 94.4 BBC SHORT CONVENTIONAL CHASSIS CAB, TANDEM AXLE(Cont.)									
1986									
	Fa	WG	15 " x 3 "	1245C - 321	R700321	R40H521	R40H9237	R40H3502	R40H3503
	Fd	DN		7141 - D224	MD224[340]	69310693	60050153	NR	NR
F080, F090	Fd	DN		7149 - D236	MD236[341]	69310693	69310782	NR	NR
	Fd	DN		7149 - D236	MD236[341]	69310693	69310782	NR	NR
R170, R175	Ra	KH	15 " x 5 "	4646 - 400	R700400	R40H595	R40H9220	R40H3538	R40H3539
	Ra	WG	15 " x 5 "	1252 - 346	R700346	R40H597	R40H9200	R40H3540	R40H3541
R185	Ra	WG	15 " x 6 "	4596 - 381	R700381	R40H597	R40H9200	R40H3540	R40H3541
	Ra	WG	15 " x 7 "	4597 - 383	R700383	R40H597	R40H9200	R40H3540	R40H3541
Split System					R700321	R40H521	R40H9237	R40H3502	R40H3503
					R700321	R40H521	R40H9237	R40H3502	R40H3503
Split System									
F090, F120	Fa	WG	15 " x 3 "	1245C - 321	R700321	R40H521	R40H9237	R40H3502	R40H3503
	Fa	WG	15 " x 3 "	1245C - 321	R700321	R40H521	R40H9237	R40H3502	R40H3503
1985									
	Fd	DN		7149 - D236	MD236[341]	69310693	R40H5523	NR	NR
	Fd	DN		7141 - D224	MD224[340]	69310693	60050153	NR	NR
	Fd	DN		7149 - D236	MD236[341]	69310693	R40H5523	NR	NR
	Fd	DN		7149 - D236	MD236[341]	69310693	R40H5523	NR	NR
	Ra	LG	15 " x 5 "	4528A - 542	N/A	R40H618	NR	NR	NR
	Ra	LG	15 " x 5 "	4528A - 542	N/A	R40H618	NR	SP7888S	SP7888S
	Ra	LG	15 " x 6 "	4504A - 543	N/A	R40H618	NR	NR	NR
	Ra	LG	15 " x 6 "	4504A - 543	N/A	R40H618	NR	SP7887S	SP7887S
	Ra	LG	15 " x 6 "	4504A - 543	N/A	R40H618	NR	NR	NR
	Ra	LG	15 " x 6 "	4504A - 543	N/A	R40H618	NR	SP7888S	SP7888S
	Ra	LG	15 " x 7 "	4505A - 544	N/A	R40H618	NR	NR	NR
	Ra	LG	15 " x 7 "	4505A - 544	N/A	R40H618	NR	SP7887S	SP7887S
	Ra	LG	15 " x 7 "	4505A - 544	N/A	R40H618	NR	SP7888S	SP7888S
	Ra	LG	15 " x 7 "	4505A - 544	N/A	R40H618	NR	NR	NR
F050, F055, F060	Fa	KH	14 " x 2-1/2 "	2060 - 361	Discontinued	R40H596	R40H9219	R40H3536	R40H3537
F070	Fa	WG	15 " x 3 "	1245C - 321	R700321	R40H521	R40H9237	R40H3502	R40H3503
	Fa	WG	15 " x 3 "	1245C - 321	R700321	R40H521	R40H9237	R40H3502	R40H3503
	Fd	DN		7141 - D224	MD224[340]	69310693	60050153	NR	NR
F080, F090	Fd	DN		7149 - D236	MD236[341]	69310693	R40H5523	NR	NR
	Fd	DN		7149 - D236	MD236[341]	69310693	R40H5523	NR	NR
R170, R175	Ra	KH	15 " x 5 "	4646 - 400	R700400	R40H595	R40H9220	R40H3538	R40H3539
	Ra	WG	15 " x 5 "	1252 - 346	R700346	R40H597	R40H9200	R40H3540	R40H3541
R185	Ra	WG	15 " x 6 "	4596 - 381	R700381	R40H597	R40H9200	R40H3540	R40H3541
	Ra	WG	15 " x 7 "	4597 - 383	R700383	R40H597	R40H9200	R40H3540	R40H3541
Split System					R700321	R40H521	R40H9237	R40H3502	R40H3503
					R700321	R40H521	R40H9237	R40H3502	R40H3503
Split System									
F090, F120	Fa	WG	15 " x 3 "	1245C - 321	R700321	R40H521	R40H9237	R40H3502	R40H3503
	Fa	WG	15 " x 3 "	1245C - 321	R700321	R40H521	R40H9237	R40H3502	R40H3503
1984									
	Fd	DN		7149 - D236	MD236[341]	69310693	R40H5523	NR	NR
	Fd	DN		7149 - D236	MD236[341]	69310693	R40H5523	NR	NR
	Fd	DN		7149 - D236	MD236[341]	69310693	R40H5523	NR	NR
	Fd	DN		7141 - D224	MD224[340]	69310693	60050153	NR	NR
	Ra	LG	15 " x 5 "	4528A - 542	N/A	R40H618	NR	NR	NR
	Ra	LG	15 " x 5 "	4528A - 542	N/A	R40H618	NR	SP7888S	SP7888S
	Ra	LG	15 " x 6 "	4504A - 543	N/A	R40H618	NR	SP7887S	SP7887S
	Ra	LG	15 " x 6 "	4504A - 543	N/A	R40H618	NR	NR	NR
	Ra	LG	15 " x 6 "	4504A - 543	N/A	R40H618	NR	SP7888S	SP7888S
	Ra	LG	15 " x 6 "	4504A - 543	N/A	R40H618	NR	NR	NR
	Ra	LG	15 " x 7 "	4505A - 544	N/A	R40H618	NR	SP7887S	SP7887S
	Ra	LG	15 " x 7 "	4505A - 544	N/A	R40H618	NR	NR	NR
	Ra	LG	15 " x 7 "	4505A - 544	N/A	R40H618	NR	SP7888S	SP7888S
	Ra	LG	15 " x 7 "	4505A - 544	N/A	R40H618	NR	NR	NR
F050, F055, F060	Fa	KH	14 " x 2-1/2 "	2060 - 361	Discontinued	R40H596	R40H9219	R40H3536	R40H3537
F070	Fa	WG	15 " x 3 "	1245C - 321	R700321	R40H521	R40H9237	R40H3502	R40H3503
	Fa	WG	15 " x 3 "	1245C - 321	R700321	R40H521	R40H9237	R40H3502	R40H3503
	Fd	DN		7141 - D224	MD224[340]	69310693	60050153	NR	NR
F080, F090	Fd	DN		7149 - D236	MD236[341]	69310693	R40H5523	NR	NR

9 - 6 Stud, Dayton Rotor, Hat Style
53 - Power Brakes
188 - 6 Stud, 9.251" Hub

37 - Also available as a New unit
186 - 10 Stud
204 - Right Hand; use E-4057 for Left Hand Expander Kits

41 - Aluminum piston
187 - 6 Stud, 6.443" Hub
329 - Forward

MERITOR DRUM OR ROTOR NO.	CALIPER OR CYLINDER BORE SIZE	MERITOR CALIPER OR WHEEL CYLINDER (LEFT)	MERITOR CALIPER OR WHEEL CYLINDER (RIGHT)	MERITOR CALIPER OR WHEEL CYLINDER REPAIR KIT	MERITOR CALIPER PISTON	MERITOR MASTER CYLINDER	MERITOR MASTER CYLINDER KIT	MERITOR BRAKE HOSE (LEFT)	MERITOR BRAKE HOSE (RIGHT)
									FORD(Cont.)
LNT700 SERIES: LOUISVILLE 94.4 BBC SHORT CONVENTIONAL CHASSIS CAB, TANDEM AXLE(Cont.)									
N/A	1-1/8 "	R4133714	R4133715	R4166926	NR	-	-	-	-
23-122700-002[9]	2-1/2 "	R424244X	R424244X[37]	60050266	69270757[41]	R4111999[53]	R4122386	R4577461	R4577461
23-122691-002[188]	2-7/8 "	60050145X	60050145X[37]	60050146	69270702[41]	R4111999[53]	R4122386	R4577461	R4577461
23-122703-002[186]	2-7/8 "	60050145X	60050145X[37]	60050146	69270702[41]	R4111999[53]	R4122386	R4577461	R4577461
N/A	1-1/2 "	R4033607	R4033607	R4166818	NR	-	-	-	-
N/A	1-5/8 "	R4133338	R4133338	R4166689	NR	-	-	-	-
N/A	1-5/8 "	R4133338	R4133338	R4166689	NR	-	-	-	-
N/A	1-3/4 "	R4133400	R4133400	R4166917	NR	-	-	-	-
N/A		R4133714	R4133715	R4166926	NR	N/A[358]	R4122688	-	-
N/A		R4133719	R4133718	R4166926	NR	N/A[358]	R4122688	-	-
N/A	1-1/4 "	R4133581	R4133581	R4166923	NR	-	-	-	-
N/A	1-1/4 "	R4133720	R4133721	R4166923	NR	-	-	-	-
23-122691-002[188]	2-7/8 "	60050145X	60050145X[37]	60050146	69270702[41]	R4111999[53]	R4122386	R4577461	R4577461
23-122700-002[9]	2-1/2 "	R424244X	R424244X[37]	60050266	69270757[41]	R4111999[53]	R4122386	R4577461	R4577461
23-122703-002[186]	2-7/8 "	60050145X	60050145X[37]	60050146	69270702[41]	R4111999[53]	R4122386	R4577461	R4577461
23-122743-002[187]	2-7/8 "	60050145X	60050145X[37]	60050146	69270702[41]	R4111999[53]	R4122386	R4577461	R4577461
N/A	1-5/8 "	201181	201182	SP7895S	NR	-	-	N/A	N/A
N/A	1-5/8 "	201185	201186[329]	SP7895S	NR	-	-	N/A	N/A
N/A	1-5/8 "	201181	201182	SP7895S	NR	-	-	N/A	N/A
N/A	1-3/4 "	201183X	201184X[329]	SP7873S	NR	-	-	N/A	N/A
N/A	1-3/4 "	201179X	201180X	SP7873S	SP7880S[204]	-	-	N/A	N/A
N/A	1-5/8 "	201185	201186[329]	SP7895S	NR	-	-	N/A	N/A
N/A	1-3/4 "	201179X	201180X	SP7873S	SP7880S[204]	-	-	N/A	N/A
N/A	1-3/4 "	201183X	201184X[329]	SP7873S	NR	-	-	N/A	N/A
N/A	1-5/8 "	201185	201186[329]	SP7895S	NR	-	-	N/A	N/A
N/A	1-5/8 "	201181	201182	SP7895S	NR	-	-	N/A	N/A
N/A	1.09375	R4133484	R4133485	R4166819	NR	-	-	-	-
N/A	1-1/8 "	R4133714	R4133715	R4166926	NR	-	-	-	-
N/A	1-1/8 "	R4133716	R4133717	R4166926	NR	-	-	-	-
23-122700-002[9]	2-1/2 "	R424244X	R424244X[37]	60050266	69270757[41]	R4111999[53]	R4122386	R4577461	R4577461
23-122691-002[188]	2-7/8 "	60050145X	60050145X[37]	60050146	69270702[41]	R4111999[53]	R4122386	R4577461	R4577461
23-122703-002[186]	2-7/8 "	60050145X	60050145X[37]	60050146	69270702[41]	R4111999[53]	R4122386	R4577461	R4577461
N/A	1-1/2 "	R4033607	R4033607	R4166818	NR	-	-	-	-
N/A	1-5/8 "	R4133338	R4133338	R4166689	NR	-	-	-	-
N/A	1-5/8 "	R4133338	R4133338	R4166689	NR	-	-	-	-
N/A	1-3/4 "	R4133400	R4133400	R4166917	NR	-	-	-	-
N/A		R4133714	R4133715	R4166926	NR	N/A[358]	R4122688	-	-
N/A		R4133719	R4133718	R4166926	NR	N/A[358]	R4122688	-	-
N/A	1-1/4 "	R4133581	R4133581	R4166923	NR	-	-	-	-
N/A	1-1/4 "	R4133720	R4133721	R4166923	NR	-	-	-	-
23-122703-002[186]	2-7/8 "	60050145X	60050145X[37]	60050146	69270702[41]	R4111999[53]	R4122386	R4577461	R4577461
23-122691-002[188]	2-7/8 "	60050145X	60050145X[37]	60050146	69270702[41]	R4111999[53]	R4122386	R4577461	R4577461
23-122743-002[187]	2-7/8 "	60050145X	60050145X[37]	60050146	69270702[41]	R4111999[53]	R4122386	R4577461	R4577461
23-122700-002[9]	2-1/2 "	R424244X	R424244X[37]	60050266	69270757[41]	R4111999[53]	R4122386	R4577461	R4577461
N/A	1-5/8 "	201181	201182	SP7895S	NR	-	-	N/A	N/A
N/A	1-5/8 "	201185	201186[329]	SP7895S	NR	-	-	N/A	N/A
N/A	1-3/4 "	201183X	201184X[329]	SP7873S	NR	-	-	N/A	N/A
N/A	1-3/4 "	201179X	201180X	SP7873S	SP7880S[204]	-	-	N/A	N/A
N/A	1-5/8 "	201185	201186[329]	SP7895S	NR	-	-	N/A	N/A
N/A	1-5/8 "	201181	201182	SP7895S	NR	-	-	N/A	N/A
N/A	1-3/4 "	201183X	201184X[329]	SP7873S	NR	-	-	N/A	N/A
N/A	1-3/4 "	201179X	201180X	SP7873S	SP7880S[204]	-	-	N/A	N/A
N/A	1-5/8 "	201185	201186[329]	SP7895S	NR	-	-	N/A	N/A
N/A	1-5/8 "	201181	201182	SP7895S	NR	-	-	N/A	N/A
N/A	1.09375	R4133484	R4133485	R4166819	NR	-	-	-	-
N/A	1-1/8 "	R4133714	R4133715	R4166926	NR	-	-	-	-
N/A	1-1/8 "	R4133716	R4133717	R4166926	NR	-	-	-	-
23-122700-002[9]	2-1/2 "	R424244X	R424244X[37]	60050266	69270757[41]	R4111999[53]	R4122386	R4577461	R4577461
23-122703-002[186]	2-7/8 "	60050145X	60050145X[37]	60050146	69270702[41]	R4111999[53]	R4122386	R4577461	R4577461

340 - Use 69160457 for Disc Pad Retainer Clip

341 - Use 69160445 for Disc Pad Retainer Clip

358 - Split System

MAKE MODEL YEAR AXLE CODE AXLE WEIGHT	AXLE & BRK. TYPE	BRK. MFG.	BRAKE SIZE	FMSI	MERITOR DISC PAD OR BRAKE SHOE	MERITOR GUIDE PIN OR RETURN SPRING KIT	MERITOR CALIPER HWD. KIT OR RETURN SPRING KIT	MERITOR ADJUSTER KIT (LEFT WHEEL)	MERITOR ADJUSTER KIT (RIGHT WHEEL)
FORD(Cont.)									
LNT700 SERIES: LOUISVILLE 94.4 BBC SHORT CONVENTIONAL CHASSIS CAB, TANDEM AXLE(Cont.)									
1984									
	Fd	DN		7149 - D236	MD236[341]	69310693	R40H5523	NR	NR
R170, R175	Ra	KH	15 " x 5 "	4646 - 400	R700400	R40H595	R40H9220	R40H3538	R40H3539
	Ra	WG	15 " x 5 "	1252 - 346	R700346	R40H597	R40H9200	R40H3540	R40H3541
R185	Ra	WG	15 " x 6 "	4596 - 381	R700381	R40H597	R40H9200	R40H3540	R40H3541
	Ra	WG	15 " x 7 "	4597 - 383	R700383	R40H597	R40H9200	R40H3540	R40H3541
Split System					R700321	R40H521	R40H9237	R40H3502	R40H3503
					R700321	R40H521	R40H9237	R40H3502	R40H3503
Split System F090, F120	Fa	WG	15 " x 3 "	1245C - 321	R700321	R40H521	R40H9237	R40H3502	R40H3503
	Fa	WG	15 " x 3 "	1245C - 321	R700321	R40H521	R40H9237	R40H3502	R40H3503
1983									
	Ra	LG	15 " x 6 "	4504A - 543	N/A	R40H618	NR	SP7888S	SP7888S
	Ra	LG	15 " x 6 "	4504A - 543	N/A	R40H618	NR	NR	NR
	Ra	LG	15 " x 7 "	4505A - 544	N/A	R40H618	NR	NR	NR
	Ra	LG	15 " x 7 "	4505A - 544	N/A	R40H618	NR	SP7888S	SP7888S
F050, F055, F060	Fa	KH	14 " x 2-1/2 "	2060 - 361	Discontinued	R40H596	R40H9219	R40H3536	R40H3537
F070	Fa	WG	15 " x 3 "	1245C - 321	R700321	R40H521	R40H9237	R40H3502	R40H3503
	Fa	WG	15 " x 3 "	1245C - 321	R700321	R40H521	R40H9237	R40H3502	R40H3503
	Fa	WG	15 " x 3 "	1245C - 321	R700321	R40H521	R40H9237	R40H3502	R40H3503
	Fa	WG	15 " x 3 "	1245C - 321	R700321	R40H521	R40H9237	R40H3502	R40H3503
	Fd	DN		7141 - D224	MD224[340]	69310693	60050153	NR	NR
F080, F090	Fd	DN		7149 - D236	MD236[341]	69310693	R40H5523	NR	NR
	Fd	DN		7149 - D236	MD236[341]	69310693	R40H5523	NR	NR
F090, F120	Fa	WG	15 " x 3 "	1245C - 321	R700321	R40H521	R40H9237	R40H3502	R40H3503
	Fa	WG	15 " x 3 "	1245C - 321	R700321	R40H521	R40H9237	R40H3502	R40H3503
R170, R175	Ra	KH	15 " x 5 "	4646 - 400	R700400	R40H595	R40H9220	R40H3538	R40H3539
	Ra	WG	15 " x 5 "	1252 - 346	R700346	R40H597	R40H9200	R40H3540	R40H3541
R185	Ra	WG	15 " x 6 "	4596 - 381	R700381	R40H597	R40H9200	R40H3540	R40H3541
	Ra	WG	15 " x 7 "	4597 - 383	R700383	R40H597	R40H9200	R40H3540	R40H3541
1982									
	Ra	LG	15 " x 6 "	4504A - 543	N/A	R40H618	NR	SP7888S	SP7888S
	Ra	LG	15 " x 6 "	4504A - 543	N/A	R40H618	NR	NR	NR
	Ra	LG	15 " x 7 "	4505A - 544	N/A	R40H618	NR	NR	NR
	Ra	LG	15 " x 7 "	4505A - 544	N/A	R40H618	NR	SP7888S	SP7888S
F050, F055, F060	Fa	KH	14 " x 2-1/2 "	2060 - 361	Discontinued	R40H596	R40H9219	R40H3536	R40H3537
F070	Fa	WG	15 " x 3 "	1245C - 321	R700321	R40H521	R40H9237	R40H3502	R40H3503
	Fa	WG	15 " x 3 "	1245C - 321	R700321	R40H521	R40H9237	R40H3502	R40H3503
	Fa	WG	15 " x 3 "	1245C - 321	R700321	R40H521	R40H9237	R40H3502	R40H3503
	Fa	WG	15 " x 3 "	1245C - 321	R700321	R40H521	R40H9237	R40H3502	R40H3503
	Fd	DN		7141 - D224	MD224[340]	69310693	60050153	NR	NR
F080, F090	Fd	DN		7149 - D236	MD236[341]	69310693	R40H5523	NR	NR
	Fd	DN		7149 - D236	MD236[341]	69310693	R40H5523	NR	NR
F090, F120	Fa	WG	15 " x 3 "	1245C - 321	R700321	R40H521	R40H9237	R40H3502	R40H3503
	Fa	WG	15 " x 3 "	1245C - 321	R700321	R40H521	R40H9237	R40H3502	R40H3503
R170, R175	Ra	KH	15 " x 5 "	4646 - 400	R700400	R40H595	R40H9220	R40H3538	R40H3539
	Ra	WG	15 " x 5 "	1252 - 346	R700346	R40H597	R40H9200	R40H3540	R40H3541
R185	Ra	WG	15 " x 6 "	4596 - 381	R700381	R40H597	R40H9200	R40H3540	R40H3541
	Ra	WG	15 " x 7 "	4597 - 383	R700383	R40H597	R40H9200	R40H3540	R40H3541
1981									
	Ra	LG	15 " x 6 "	4504A - 543	N/A	R40H618	NR	NR	NR
	Ra	LG	15 " x 6 "	4504A - 543	N/A	R40H618	NR	SP7888S	SP7888S
	Ra	LG	15 " x 7 "	4505A - 544	N/A	R40H618	NR	SP7888S	SP7888S
	Ra	LG	15 " x 7 "	4505A - 544	N/A	R40H618	NR	NR	NR
F050, F055, F060	Fa	KH	14 " x 2-1/2 "	2060 - 361	Discontinued	R40H596	R40H9219	R40H3536	R40H3537
F070	Fa	WG	15 " x 3 "	1245C - 321	R700321	R40H521	R40H9237	R40H3502	R40H3503
	Fa	WG	15 " x 3 "	1245C - 321	R700321	R40H521	R40H9237	R40H3502	R40H3503
	Fa	WG	15 " x 3 "	1245C - 321	R700321	R40H521	R40H9237	R40H3502	R40H3503
	Fa	WG	15 " x 3 "	1245C - 321	R700321	R40H521	R40H9237	R40H3502	R40H3503
	Fd	DN		7141 - D224	MD224[340]	69310693	60050153	NR	NR
F080, F090	Fd	DN		7149 - D236	MD236[341]	69310693	R40H5523	NR	NR
	Fd	DN		7149 - D236	MD236[341]	69310693	R40H5523	NR	NR
F090, F120	Fa	WG	15 " x 3 "	1245C - 321	R700321	R40H521	R40H9237	R40H3502	R40H3503
	Fa	WG	15 " x 3 "	1245C - 321	R700321	R40H521	R40H9237	R40H3502	R40H3503

9 - 6 Stud, Dayton Rotor, Hat Style
53 - Power Brakes
214 - Power Brakes, Split System
37 - Also available as a New unit
186 - 10 Stud
219 - Power Brakes, Gasoline Engine with Vacuum Booster
41 - Aluminum piston
188 - 6 Stud, 9.251" Hub
329 - Forward

MERITOR DRUM OR ROTOR NO.	CALIPER OR CYLINDER BORE SIZE	MERITOR CALIPER OR WHEEL CYLINDER (LEFT)	MERITOR CALIPER OR WHEEL CYLINDER (RIGHT)	MERITOR CALIPER OR WHEEL CYLINDER REPAIR KIT	MERITOR CALIPER PISTON	MERITOR MASTER CYLINDER	MERITOR MASTER CYLINDER KIT	MERITOR BRAKE HOSE (LEFT)	MERITOR BRAKE HOSE (RIGHT)
									FORD(Cont.)
LNT700 SERIES: LOUISVILLE 94.4 BBC SHORT CONVENTIONAL CHASSIS CAB, TANDEM AXLE(Cont.)									
23-122691-002[188]	2-7/8 "	60050145X	60050145X[37]	60050146	69270702[41]	R4111999[53]	R4122386	R4577461	R4577461
N/A	1-1/2 "	R4033607	R4033607	R4166818	NR	-	-	-	-
N/A	1-5/8 "	R4133338	R4133338	R4166689	NR	-	-	-	-
N/A	1-5/8 "	R4133338	R4133338	R4166689	NR	-	-	-	-
N/A	1-3/4 "	R4133400	R4133400	R4166917	NR	-	-	-	-
N/A		R4133719	R4133718	R4166926	NR	N/A[358]	R4122688	-	-
N/A		R4133714	R4133715	R4166926	NR	N/A[358]	R4122688	-	-
N/A	1-1/4 "	R4133581	R4133581	R4166923	NR	-	-	-	-
N/A	1-1/4 "	R4133720	R4133721	R4166923	NR	-	-	-	-
N/A	1-5/8 "	201185	201186[329]	SP7895S	NR	-	-	R4577147	R4577147
N/A	1-5/8 "	201181	201182	SP7895S	NR	-	-	R4577147	R4577147
N/A	1-5/8 "	201181	201182	SP7895S	NR	-	-	R4577147	R4577147
N/A	1-5/8 "	201185	201186[329]	SP7895S	NR	-	-	R4577147	R4577147
N/A	1.09375	R4133484	R4133485	R4166819	NR	R4111629[53]	R4122484	R4577460	R4577460
N/A	1-1/8 "	R4133719	R4133718	R4166926	NR	R4111992[214]	R4122386	R4577452	R4577453
N/A	1-1/8 "	R4133714	R4133715	R4166926	NR	R4111911[219]	R4122387	R4577454	R4577455
N/A	1-1/8 "	R4133716	R4133717	R4166926	NR	R4111911[219]	R4122387	R4577454	R4577455
N/A	1-1/8 "	R4133714	R4133715	R4166926	NR	R4111992[214]	R4122386	R4577452	R4577453
23-122700-002[9]	2-1/2 "	R424244X	R424244X[37]	60050266	69270757[41]	R4111992[214]	R4122386	R4577452	R4577453
23-122691-002[188]	2-7/8 "	60050145X	60050145X[37]	60050146	69270702[41]	R4111992[214]	R4122386	R4577452	R4577453
23-122703-002[186]	2-7/8 "	60050145X	60050145X[37]	60050146	69270702[41]	R4111992[214]	R4122386	R4577452	R4577453
N/A	1-1/4 "	R4133581	R4133581	R4166923	NR	R4111992[214]	R4122386	R4577452	R4577453
N/A	1-1/4 "	R4133720	R4133721	R4166923	NR	R4111992[214]	R4122386	R4577452	R4577453
N/A	1-1/2 "	R4033607	R4033607	R4166818	NR	-	-	R4577147	R4577147
N/A	1-5/8 "	R4133338	R4133338	R4166689	NR	-	-	R4577147	R4577147
N/A	1-5/8 "	R4133338	R4133338	R4166689	NR	-	-	R4577147	R4577147
N/A	1-3/4 "	R4133400	R4133400	R4166917	NR	-	-	R4577147	R4577147
N/A	1-5/8 "	201185	201186[329]	SP7895S	NR	-	-	R4577147	R4577147
N/A	1-5/8 "	201181	201182	SP7895S	NR	-	-	R4577147	R4577147
N/A	1-5/8 "	201181	201182	SP7895S	NR	-	-	R4577147	R4577147
N/A	1-5/8 "	201185	201186[329]	SP7895S	NR	-	-	R4577147	R4577147
N/A	1.09375	R4133484	R4133485	R4166819	NR	R4111629[53]	R4122484	R4577460	R4577460
N/A	1-1/8 "	R4133714	R4133715	R4166926	NR	R4111911[219]	R4122387	R4577454	R4577455
N/A	1-1/8 "	R4133719	R4133718	R4166926	NR	R4111992[214]	R4122386	R4577452	R4577453
N/A	1-1/8 "	R4133714	R4133715	R4166926	NR	R4111992[214]	R4122386	R4577452	R4577453
N/A	1-1/8 "	R4133716	R4133717	R4166926	NR	R4111911[219]	R4122387	R4577454	R4577455
23-122700-002[9]	2-1/2 "	R424244X	R424244X[37]	60050266	69270757[41]	R4111992[214]	R4122386	R4577452	R4577453
23-122691-002[188]	2-7/8 "	60050145X	60050145X[37]	60050146	69270702[41]	R4111992[214]	R4122386	R4577452	R4577453
23-122703-002[186]	2-7/8 "	60050145X	60050145X[37]	60050146	69270702[41]	R4111992[214]	R4122386	R4577452	R4577453
N/A	1-1/4 "	R4133720	R4133721	R4166923	NR	R4111992[214]	R4122386	R4577452	R4577453
N/A	1-1/4 "	R4133581	R4133581	R4166923	NR	R4111992[214]	R4122386	R4577452	R4577453
N/A	1-1/2 "	R4033607	R4033607	R4166818	NR	-	-	R4577147	R4577147
N/A	1-5/8 "	R4133338	R4133338	R4166689	NR	-	-	R4577147	R4577147
N/A	1-5/8 "	R4133338	R4133338	R4166689	NR	-	-	R4577147	R4577147
N/A	1-3/4 "	R4133400	R4133400	R4166917	NR	-	-	R4577147	R4577147
N/A	1-5/8 "	201181	201182	SP7895S	NR	-	-	R4577147	R4577147
N/A	1-5/8 "	201185	201186[329]	SP7895S	NR	-	-	R4577147	R4577147
N/A	1-5/8 "	201185	201186[329]	SP7895S	NR	-	-	R4577147	R4577147
N/A	1-5/8 "	201181	201182	SP7895S	NR	-	-	R4577147	R4577147
N/A	1.09375	R4133484	R4133485	R4166819	NR	R4111629[53]	R4122484	R4577460	R4577460
N/A	1-1/8 "	R4133719	R4133718	R4166926	NR	R4111992[214]	R4122386	R4577452	R4577453
N/A	1-1/8 "	R4133714	R4133715	R4166926	NR	R4111992[214]	R4122386	R4577452	R4577453
N/A	1-1/8 "	R4133716	R4133717	R4166926	NR	R4111911[219]	R4122387	R4577454	R4577455
N/A	1-1/8 "	R4133714	R4133715	R4166926	NR	R4111911[219]	R4122387	R4577454	R4577455
23-122700-002[9]	2-1/2 "	R424244X	R424244X[37]	60050266	69270757[41]	R4111992[214]	R4122386	R4577452	R4577453
23-122691-002[188]	2-7/8 "	60050145X	60050145X[37]	60050146	69270702[41]	R4111992[214]	R4122386	R4577452	R4577453
23-122703-002[186]	2-7/8 "	60050145X	60050145X[37]	60050146	69270702[41]	R4111992[214]	R4122386	R4577452	R4577453
N/A	1-1/4 "	R4133720	R4133721	R4166923	NR	R4111992[214]	R4122386	R4577452	R4577453
N/A	1-1/4 "	R4133581	R4133581	R4166923	NR	R4111992[214]	R4122386	R4577452	R4577453

340 - Use 69160457 for Disc Pad Retainer Clip

341 - Use 69160445 for Disc Pad Retainer Clip

358 - Split System

MAKE MODEL YEAR AXLE CODE AXLE WEIGHT	AXLE & BRK. TYPE	BRK. MFG.	BRAKE SIZE	FMSI	MERITOR DISC PAD OR BRAKE SHOE	MERITOR GUIDE PIN OR RETURN SPRING KIT	MERITOR CALIPER HWD. KIT OR RETURN SPRING KIT	MERITOR ADJUSTER KIT (LEFT WHEEL)	MERITOR ADJUSTER KIT (RIGHT WHEEL)
FORD(Cont.)									
LNT700 SERIES: LOUISVILLE 94.4 BBC SHORT CONVENTIONAL CHASSIS CAB, TANDEM AXLE(Cont.)									
1981									
R170, R175	Ra	KH	15 " x 5 "	4646 - 400	R700400	R40H595	R40H9220	R40H3538	R40H3539
	Ra	WG	15 " x 5 "	1252 - 346	R700346	R40H597	R40H9200	R40H3540	R40H3541
R185	Ra	WG	15 " x 6 "	4596 - 381	R700381	R40H597	R40H9200	R40H3540	R40H3541
	Ra	WG	15 " x 7 "	4597 - 383	R700383	R40H597	R40H9200	R40H3540	R40H3541
1980									
	Ra	LG	15 " x 6 "	4504A - 543	N/A	R40H618	NR	NR	NR
	Ra	LG	15 " x 6 "	4504A - 543	N/A	R40H618	NR	SP7888S	SP7888S
	Ra	LG	15 " x 7 "	4505A - 544	N/A	R40H618	NR	SP7888S	SP7888S
	Ra	LG	15 " x 7 "	4505A - 544	N/A	R40H618	NR	NR	NR
F050, F055, F060	Fa	KH	14 " x 2-1/2 "	2060 - 361	Discontinued	R40H596	R40H9219	R40H3536	R40H3537
F070	Fa	WG	15 " x 3 "	1245C - 321	R700321	R40H521	R40H9237	R40H3502	R40H3503
	Fa	WG	15 " x 3 "	1245C - 321	R700321	R40H521	R40H9237	R40H3502	R40H3503
	Fa	WG	15 " x 3 "	1245C - 321	R700321	R40H521	R40H9237	R40H3502	R40H3503
	Fa	WG	15 " x 3 "	1245C - 321	R700321	R40H521	R40H9237	R40H3502	R40H3503
	Fd	DN		7141 - D224	MD224[340]	69310693	60050153	NR	NR
F080, F090	Fd	DN		7149 - D236	MD236[341]	69310693	R40H5523	NR	NR
	Fd	DN		7149 - D236	MD236[341]	69310693	R40H5523	NR	NR
F090, F120	Fa	WG	15 " x 3 "	1245C - 321	R700321	R40H521	R40H9237	R40H3502	R40H3503
	Fa	WG	15 " x 3 "	1245C - 321	R700321	R40H521	R40H9237	R40H3502	R40H3503
R170, R175	Ra	KH	15 " x 5 "	4646 - 400	R700400	R40H595	R40H9220	R40H3538	R40H3539
	Ra	WG	15 " x 5 "	1252 - 346	R700346	R40H597	R40H9200	R40H3540	R40H3541
R185	Ra	WG	15 " x 6 "	4596 - 381	R700381	R40H597	R40H9200	R40H3540	R40H3541
	Ra	WG	15 " x 7 "	4597 - 383	R700383	R40H597	R40H9200	R40H3540	R40H3541
1979									
F050, F055, F060	Fa	KH	14 " x 2-1/2 "	2060 - 361	Discontinued	R40H596	R40H9219	R40H3536	R40H3537
F070	Fa	WG	15 " x 3 "	1245C - 321	R700321	R40H521	R40H9237	R40H3502	R40H3503
	Fa	WG	15 " x 3 "	1245C - 321	R700321	R40H521	R40H9237	R40H3502	R40H3503
	Fd	DN		7141 - D224	MD224[340]	69310693	60050153	NR	NR
F080, F090	Fd	DN		7149 - D236	MD236[341]	69310693	R40H5523	NR	NR
	Fd	DN		7149 - D236	MD236[341]	69310693	R40H5523	NR	NR
R170, R175	Ra	KH	15 " x 5 "	4646 - 400	R700400	R40H595	R40H9220	R40H3538	R40H3539
	Ra	WG	15 " x 5 "	1252 - 346	R700346	R40H597	R40H9200	R40H3540	R40H3541
R185	Ra	WG	15 " x 6 "	4596 - 381	R700381	R40H597	R40H9200	R40H3540	R40H3541
	Ra	WG	15 " x 7 "	4597 - 383	R700383	R40H597	R40H9200	R40H3540	R40H3541
Split System					R700321	R40H521	R40H9237	R40H3502	R40H3503
					R700321	R40H521	R40H9237	R40H3502	R40H3503
Split System									
F090, F120	Fa	WG	15 " x 3 "	1245C - 321	R700321	R40H521	R40H9237	R40H3502	R40H3503
	Fa	WG	15 " x 3 "	1245C - 321	R700321	R40H521	R40H9237	R40H3502	R40H3503
1978									
F050, F055, F060	Fa	KH	14 " x 2-1/2 "	2060 - 361	Discontinued	R40H596	R40H9219	R40H3536	R40H3537
F070	Fa	WG	15 " x 3 "	1245C - 321	R700321	R40H521	R40H9237	R40H3502	R40H3503
	Fa	WG	15 " x 3 "	1245C - 321	R700321	R40H521	R40H9237	R40H3502	R40H3503
	Fd	DN		7141 - D224	MD224[340]	69310693	60050153	NR	NR
F080, F090	Fd	DN		7149 - D236	MD236[341]	69310693	R40H5523	NR	NR
	Fd	DN		7149 - D236	MD236[341]	69310693	R40H5523	NR	NR
R170, R175	Ra	KH	15 " x 5 "	4646 - 400	R700400	R40H595	R40H9220	R40H3538	R40H3539
	Ra	WG	15 " x 5 "	1252 - 346	R700346	R40H597	R40H9200	R40H3540	R40H3541
R185	Ra	WG	15 " x 6 "	4596 - 381	R700381	R40H597	R40H9200	R40H3540	R40H3541
	Ra	WG	15 " x 7 "	4597 - 383	R700383	R40H597	R40H9200	R40H3540	R40H3541
Split System					R700321	R40H521	R40H9237	R40H3502	R40H3503
					R700321	R40H521	R40H9237	R40H3502	R40H3503
Split System									
F090, F120	Fa	WG	15 " x 3 "	1245C - 321	R700321	R40H521	R40H9237	R40H3502	R40H3503
	Fa	WG	15 " x 3 "	1245C - 321	R700321	R40H521	R40H9237	R40H3502	R40H3503
1977									
F050, F055, F060	Fa	KH	14 " x 2-1/2 "	2060 - 361	Discontinued	R40H596	R40H9219	R40H3536	R40H3537
	Fa	KH	14 " x 2-1/2 "	2060 - 361	Discontinued	R40H596	R40H9219	R40H3536	R40H3537
F070	Fa	WG	15 " x 3 "	1245C - 321	R700321	R40H521	R40H9237	R40H3502	R40H3503
	Fa	WG	15 " x 3 "	1245C - 321	R700321	R40H521	R40H9237	R40H3502	R40H3503
	Fa	WG	15 " x 3 "	1245C - 321	R700321	R40H521	R40H9237	R40H3502	R40H3503
	Fa	WG	15 " x 3 "	1245C - 321	R700321	R40H521	R40H9237	R40H3502	R40H3503
	Fa	WG	15 " x 3 "	1245C - 321	R700321	R40H521	R40H9237	R40H3502	R40H3503

9 - 6 Stud, Dayton Rotor, Hat Style
53 - Power Brakes
214 - Power Brakes, Split System
37 - Also available as a New unit
186 - 10 Stud
219 - Power Brakes, Gasoline Engine with Vacuum Booster
41 - Aluminum piston
188 - 6 Stud, 9.251" Hub
329 - Forward

MERITOR DRUM OR ROTOR NO.	CALIPER OR CYLINDER BORE SIZE	MERITOR CALIPER OR WHEEL CYLINDER (LEFT)	MERITOR CALIPER OR WHEEL CYLINDER (RIGHT)	MERITOR CALIPER OR WHEEL CYLINDER REPAIR KIT	MERITOR CALIPER PISTON	MERITOR MASTER CYLINDER	MERITOR MASTER CYLINDER KIT	MERITOR BRAKE HOSE (LEFT)	MERITOR BRAKE HOSE (RIGHT)
									FORD(Cont.)
LNT700 SERIES: LOUISVILLE 94.4 BBC SHORT CONVENTIONAL CHASSIS CAB, TANDEM AXLE(Cont.)									
N/A	1-1/2 "	R4033607	R4033607	R4166818	NR	-	-	R4577147	R4577147
N/A	1-5/8 "	R4133338	R4133338	R4166689	NR	-	-	R4577147	R4577147
N/A	1-5/8 "	R4133338	R4133338	R4166689	NR	-	-	R4577147	R4577147
N/A	1-3/4 "	R4133400	R4133400	R4166917	NR	-	-	R4577147	R4577147
N/A	1-5/8 "	201181	201182	SP7895S	NR	-	-	R4577147	R4577147
N/A	1-5/8 "	201185	201186[329]	SP7895S	NR	-	-	R4577147	R4577147
N/A	1-5/8 "	201185	201186[329]	SP7895S	NR	-	-	R4577147	R4577147
N/A	1-5/8 "	201181	201182	SP7895S	NR	-	-	R4577147	R4577147
N/A	1.09375	R4133484	R4133485	R4166819	NR	R4111629[53]	R4122484	R4577460	R4577460
N/A	1-1/8 "	R4133719	R4133718	R4166926	NR	R4111992[214]	R4122386	R4577452	R4577453
N/A	1-1/8 "	R4133714	R4133715	R4166926	NR	R4111911[219]	R4122387	R4577454	R4577455
N/A	1-1/8 "	R4133716	R4133717	R4166926	NR	R4111911[219]	R4122387	R4577454	R4577455
N/A	1-1/8 "	R4133714	R4133715	R4166926	NR	R4111992[214]	R4122386	R4577452	R4577453
23-122700-002[9]	2-1/2 "	R424244X	R424244X[37]	60050266	69270757[41]	R4111992[214]	R4122386	R4577452	R4577453
23-122703-002[186]	2-7/8 "	60050145X	60050145X[37]	60050146	69270702[41]	R4111992[214]	R4122386	R4577452	R4577453
23-122691-002[188]	2-7/8 "	60050145X	60050145X[37]	60050146	69270702[41]	R4111992[214]	R4122386	R4577452	R4577453
N/A	1-1/4 "	R4133720	R4133721	R4166923	NR	R4111992[214]	R4122386	R4577452	R4577453
N/A	1-1/4 "	R4133581	R4133581	R4166923	NR	R4111992[214]	R4122386	R4577452	R4577453
N/A	1-1/2 "	R4033607	R4033607	R4166818	NR	-	-	R4577147	R4577147
N/A	1-5/8 "	R4133338	R4133338	R4166689	NR	-	-	R4577147	R4577147
N/A	1-5/8 "	R4133338	R4133338	R4166689	NR	-	-	R4577147	R4577147
N/A	1-3/4 "	R4133400	R4133400	R4166917	NR	-	-	R4577147	R4577147
N/A	1.09375	R4133484	R4133485	R4166819	NR	-	-	-	-
N/A	1-1/8 "	R4133716	R4133717	R4166926	NR	-	-	-	-
N/A	1-1/8 "	R4133714	R4133715	R4166926	NR	-	-	-	-
23-122700-002[9]	2-1/2 "	R424244X	R424244X[37]	60050266	69270757[41]	-	-	-	-
23-122703-002[186]	2-7/8 "	60050145X	60050145X[37]	60050146	69270702[41]	-	-	-	-
23-122691-002[188]	2-7/8 "	60050145X	60050145X[37]	60050146	69270702[41]	-	-	-	-
N/A	1-1/2 "	R4033607	R4033607	R4166818	NR	-	-	-	-
N/A	1-5/8 "	R4133338	R4133338	R4166689	NR	-	-	-	-
N/A	1-5/8 "	R4133338	R4133338	R4166689	NR	-	-	-	-
N/A	1-3/4 "	R4133400	R4133400	R4166917	NR	-	-	-	-
N/A		R4133719	R4133718	R4166926	NR	N/A[358]	R4122688	-	-
N/A		R4133714	R4133715	R4166926	NR	N/A[358]	R4122688	-	-
N/A	1-1/4 "	R4133720	R4133721	R4166923	NR	-	-	-	-
N/A	1-1/4 "	R4133581	R4133581	R4166923	NR	-	-	-	-
N/A	1.09375	R4133484	R4133485	R4166819	NR	-	-	-	-
N/A	1-1/8 "	R4133716	R4133717	R4166926	NR	-	-	-	-
N/A	1-1/8 "	R4133714	R4133715	R4166926	NR	-	-	-	-
23-122700-002[9]	2-1/2 "	R424244X	R424244X[37]	60050266	69270757[41]	-	-	-	-
23-122691-002[188]	2-7/8 "	60050145X	60050145X[37]	60050146	69270702[41]	-	-	-	-
23-122703-002[186]	2-7/8 "	60050145X	60050145X[37]	60050146	69270702[41]	-	-	-	-
N/A	1-1/2 "	R4033607	R4033607	R4166818	NR	-	-	-	-
N/A	1-5/8 "	R4133338	R4133338	R4166689	NR	-	-	-	-
N/A	1-5/8 "	R4133338	R4133338	R4166689	NR	-	-	-	-
N/A	1-3/4 "	R4133400	R4133400	R4166917	NR	-	-	-	-
N/A		R4133714	R4133715	R4166926	NR	N/A[358]	R4122688	-	-
N/A		R4133719	R4133718	R4166926	NR	N/A[358]	R4122688	-	-
N/A	1-1/4 "	R4133720	R4133721	R4166923	NR	-	-	-	-
N/A	1-1/4 "	R4133581	R4133581	R4166923	NR	-	-	-	-
-	1.09375	R4133484	R4133485	R4166819	NR	-	-	-	-
-	1.09375	R4133484	R4133485	R4166819	NR	-	-	-	-
-	1-1/8 "	R4133714	R4133715	R4166926	NR	N/A[358]	R4122688	-	-
-	1-1/8 "	R4133714	R4133715	R4166926	NR	-	-	-	-
-	1-1/8 "	R4133716	R4133717	R4166926	NR	-	-	-	-
-	1-1/8 "	R4133714	R4133715	R4166926	NR	N/A[358]	R4122688	-	-
-	1-1/8 "	R4133719	R4133718	R4166926	NR	N/A[358]	R4122688	-	-

340 - Use 69160457 for Disc Pad Retainer Clip

341 - Use 69160445 for Disc Pad Retainer Clip

358 - Split System

MAKE MODEL YEAR AXLE CODE AXLE WEIGHT	AXLE & BRK. TYPE	BRK. MFG.	BRAKE SIZE	FMSI	MERITOR DISC PAD OR BRAKE SHOE	MERITOR GUIDE PIN OR RETURN SPRING KIT	MERITOR CALIPER HWD. KIT OR RETURN SPRING KIT	MERITOR ADJUSTER KIT (LEFT WHEEL)	MERITOR ADJUSTER KIT (RIGHT WHEEL)
FORD(Cont.)									
LNT700 SERIES: LOUISVILLE 94.4 BBC SHORT CONVENTIONAL CHASSIS CAB, TANDEM AXLE(Cont.)									
1977									
	Fa	WG	15 " x 3 "	1245C - 321	R700321	R40H521	R40H9237	R40H3502	R40H3503
	Fa	WG	15 " x 3 "	1245C - 321	R700321	R40H521	R40H9237	R40H3502	R40H3503
	Fa	WG	15 " x 3 "	1245C - 321	R700321	R40H521	R40H9237	R40H3502	R40H3503
	Fd	DN		7141 - D224	MD224[340]	69310693	60050153	NR	NR
F080, F090	Fd	DN		7149 - D236	MD236[341]	69310693	R40H5523	NR	NR
	Fd	DN		7149 - D236	MD236[341]	69310693	R40H5523	NR	NR
F090, F120	Fa	WG	15 " x 3 "	1245C - 321	R700321	R40H521	R40H9237	R40H3502	R40H3503
	Fa	WG	15 " x 3 "	1245C - 321	R700321	R40H521	R40H9237	R40H3502	R40H3503
	Fa	WG	15 " x 3 "	1245C - 321	R700321	R40H521	R40H9237	R40H3502	R40H3503
	Fa	WG	15 " x 3 "	1245C - 321	R700321	R40H521	R40H9237	R40H3502	R40H3503
R170, R175	Ra	KH	15 " x 5 "	4646 - 400	R700400	R40H595	R40H9220	R40H3538	R40H3539
	Ra	KH	15 " x 5 "	4646 - 400	R700400	R40H595	R40H9220	R40H3538	R40H3539
	Ra	KH	15 " x 5 "	4646 - 400	R700400	R40H595	R40H9220	R40H3538	R40H3539
	Ra	WG	15 " x 5 "	1252 - 346	R700346	R40H597	R40H9200	R40H3540	R40H3541
	Ra	WG	15 " x 5 "	1252 - 346	R700346	R40H597	R40H9200	R40H3540	R40H3541
R185	Ra	WG	15 " x 6 "	4596 - 381	R700381	R40H597	R40H9200	R40H3540	R40H3541
	Ra	WG	15 " x 6 "	4596 - 381	R700381	R40H597	R40H9200	R40H3540	R40H3541
	Ra	WG	15 " x 7 "	4597 - 383	R700383	R40H597	R40H9200	R40H3540	R40H3541
	Ra	WG	15 " x 7 "	4597 - 383	R700383	R40H597	R40H9200	R40H3540	R40H3541
1976									
F050, F055, F060	Fa	KH	14 " x 2-1/2 "	2060 - 361	Discontinued	R40H596	R40H9219	R40H3536	R40H3537
	Fa	KH	14 " x 2-1/2 "	2060 - 361	Discontinued	R40H596	R40H9219	R40H3536	R40H3537
F070	Fd	DN		7141 - D224	MD224[340]	69310693	60050153	NR	NR
F080, F090	Fd	DN		7149 - D236	MD236[341]	69310693	R40H5523	NR	NR
	Fd	DN		7149 - D236	MD236[341]	69310693	R40H5523	NR	NR
R170, R175	Ra	KH	15 " x 5 "	4646 - 400	R700400	R40H595	R40H9220	R40H3538	R40H3539
	Ra	KH	15 " x 5 "	4646 - 400	R700400	R40H595	R40H9220	R40H3538	R40H3539
	Ra	KH	15 " x 5 "	4646 - 400	R700400	R40H595	R40H9220	R40H3538	R40H3539
	Ra	WG	15 " x 5 "	1252 - 346	R700346	R40H597	R40H9200	R40H3540	R40H3541
	Ra	WG	15 " x 5 "	1252 - 346	R700346	R40H597	R40H9200	R40H3540	R40H3541
R185	Ra	WG	15 " x 6 "	4596 - 381	R700381	R40H597	R40H9200	R40H3540	R40H3541
	Ra	WG	15 " x 6 "	4596 - 381	R700381	R40H597	R40H9200	R40H3540	R40H3541
	Ra	WG	15 " x 7 "	4597 - 383	R700383	R40H597	R40H9200	R40H3540	R40H3541
	Ra	WG	15 " x 7 "	4597 - 383	R700383	R40H597	R40H9200	R40H3540	R40H3541
Single System									
F070	Fa	WG	15 " x 3 "	1245C - 321	R700321	R40H521	R40H9237	R40H3502	R40H3503
	Fa	WG	15 " x 3 "	1245C - 321	R700321	R40H521	R40H9237	R40H3502	R40H3503
	Fa	WG	15 " x 3 "	1245C - 321	R700321	R40H521	R40H9237	R40H3502	R40H3503
	Fa	WG	15 " x 3 "	1245C - 321	R700321	R40H521	R40H9237	R40H3502	R40H3503
Split System									
F070	Fa	WG	15 " x 3 "	1245C - 321	R700321	R40H521	R40H9237	R40H3502	R40H3503
	Fa	WG	15 " x 3 "	1245C - 321	R700321	R40H521	R40H9237	R40H3502	R40H3503
	Fa	WG	15 " x 3 "	1245C - 321	R700321	R40H521	R40H9237	R40H3502	R40H3503
	Fa	WG	15 " x 3 "	1245C - 321	R700321	R40H521	R40H9237	R40H3502	R40H3503
Split System									
F090, F120	Fa	WG	15 " x 3 "	1245C - 321	R700321	R40H521	R40H9237	R40H3502	R40H3503
	Fa	WG	15 " x 3 "	1245C - 321	R700321	R40H521	R40H9237	R40H3502	R40H3503
	Fa	WG	15 " x 3 "	1245C - 321	R700321	R40H521	R40H9237	R40H3502	R40H3503
	Fa	WG	15 " x 3 "	1245C - 321	R700321	R40H521	R40H9237	R40H3502	R40H3503
1975									
F050, F055, F060	Fa	KH	14 " x 2-1/2 "	2060 - 361	Discontinued	R40H596	R40H9219	R40H3536	R40H3537
	Fa	KH	14 " x 2-1/2 "	2060 - 361	Discontinued	R40H596	R40H9219	R40H3536	R40H3537
F070	Fd	DN		7141 - D224	MD224[340]	69310693	60050153	NR	NR
F080, F090	Fd	DN		7149 - D236	MD236[341]	69310693	R40H5523	NR	NR
	Fd	DN		7149 - D236	MD236[341]	69310693	R40H5523	NR	NR
R170, R175	Ra	KH	15 " x 5 "	4646 - 400	R700400	R40H595	R40H9220	R40H3538	R40H3539
	Ra	KH	15 " x 5 "	4646 - 400	R700400	R40H595	R40H9220	R40H3538	R40H3539
	Ra	KH	15 " x 5 "	4646 - 400	R700400	R40H595	R40H9220	R40H3538	R40H3539
	Ra	WG	15 " x 5 "	1252 - 346	R700346	R40H597	R40H9200	R40H3540	R40H3541
	Ra	WG	15 " x 5 "	1252 - 346	R700346	R40H597	R40H9200	R40H3540	R40H3541
R185	Ra	WG	15 " x 6 "	4596 - 381	R700381	R40H597	R40H9200	R40H3540	R40H3541
	Ra	WG	15 " x 6 "	4596 - 381	R700381	R40H597	R40H9200	R40H3540	R40H3541
	Ra	WG	15 " x 7 "	4597 - 383	R700383	R40H597	R40H9200	R40H3540	R40H3541
	Ra	WG	15 " x 7 "	4597 - 383	R700383	R40H597	R40H9200	R40H3540	R40H3541

9 - 6 Stud, Dayton Rotor, Hat Style
42 - 6 Stud, Dayton Rotor, "U" Style
341 - Use 69160445 for Disc Pad Retainer Clip
37 - Also available as a New unit
186 - 10 Stud
358 - Split System
41 - Aluminum piston
340 - Use 69160457 for Disc Pad Retainer Clip

MERITOR DRUM OR ROTOR NO.	CALIPER OR CYLINDER BORE SIZE	MERITOR CALIPER OR WHEEL CYLINDER (LEFT)	MERITOR CALIPER OR WHEEL CYLINDER (RIGHT)	MERITOR CALIPER OR WHEEL CYLINDER REPAIR KIT	MERITOR CALIPER PISTON	MERITOR MASTER CYLINDER	MERITOR MASTER CYLINDER KIT	MERITOR BRAKE HOSE (LEFT)	MERITOR BRAKE HOSE (RIGHT)
									FORD(Cont.)
LNT700 SERIES: LOUISVILLE 94.4 BBC SHORT CONVENTIONAL CHASSIS CAB, TANDEM AXLE(Cont.)									
-	1-1/8 "	R4133716	R4133717	R4166926	NR	-	-	-	-
-	1-1/8 "	R4133714	R4133715	R4166926	NR	-	-	-	-
-	1-1/8 "	R4133719	R4133718	R4166926	NR	N/A[358]	R4122688	-	-
23-122700-002[9]	2-1/2 "	R424244X	R424244X[37]	60050266	69270757[41]	-	-	-	-
23-122703-002[186]	2-7/8 "	60050145X	60050145X[37]	60050146	69270702[41]	-	-	-	-
23-122691-002[42]	2-7/8 "	60050145X	60050145X[37]	60050146	69270702[41]	-	-	-	-
-	1-1/4 "	R4133581	R4133582	R4166923	NR	-	-	-	-
-	1-1/4 "	R4133720	R4133721	R4166923	NR	-	-	-	-
-	1-1/4 "	R4133720	R4133721	R4166923	NR	-	-	-	-
-	1-1/4 "	R4133581	R4133581	R4166923	NR	-	-	-	-
-	1-1/2 "	R4033607	R4033607	R4166818	NR	-	-	-	-
-	1-1/2 "	R4033607	R4033607	R4166818	NR	-	-	-	-
-	1-5/8 "	R4133606	R4133606	R415193	NR	-	-	-	-
-	1-5/8 "	R4133338	R4133338	R4166689	NR	-	-	-	-
-	1-5/8 "	R4133338	R4133338	R4166689	NR	-	-	-	-
-	1-5/8 "	R4133338	R4133338	R4166689	NR	-	-	-	-
-	1-5/8 "	R4133338	R4133338	R4166689	NR	-	-	-	-
-	1-3/4 "	R4133400	R4133400	R4166917	NR	-	-	-	-
-	1-3/4 "	R4133400	R4133400	R4166917	NR	-	-	-	-
-	1.09375	R4133484	R4133485	R4166819	NR	-	-	-	-
-	1.09375	R4133484	R4133485	R4166819	NR	-	-	-	-
23-122700-002[9]	2-1/2 "	R424244X	R424244X[37]	60050266	69270757[41]	-	-	-	-
23-122691-002[42]	2-7/8 "	60050145X	60050145X[37]	60050146	69270702[41]	-	-	-	-
23-122703-002[186]	2-7/8 "	60050145X	60050145X[37]	60050146	69270702[41]	-	-	-	-
-	1-1/2 "	R4033607	R4033607	R4166818	NR	-	-	-	-
-	1-5/8 "	R4133606	R4133606	R415193	NR	-	-	-	-
-	1-1/2 "	R4033607	R4033607	R4166818	NR	-	-	-	-
-	1-5/8 "	R4133338	R4133338	R4166689	NR	-	-	-	-
-	1-5/8 "	R4133338	R4133338	R4166689	NR	-	-	-	-
-	1-5/8 "	R4133338	R4133338	R4166689	NR	-	-	-	-
-	1-5/8 "	R4133338	R4133338	R4166689	NR	-	-	-	-
-	1-3/4 "	R4133400	R4133400	R4166917	NR	-	-	-	-
-	1-3/4 "	R4133400	R4133400	R4166917	NR	-	-	-	-
-	1-1/8 "	R4133714	R4133715	R4166926	NR	-	-	-	-
-	1-1/8 "	R4133714	R4133715	R4166926	NR	-	-	-	-
-	1-1/8 "	R4133716	R4133717	R4166926	NR	-	-	-	-
-	1-1/8 "	R4133716	R4133717	R4166926	NR	-	-	-	-
-	1-1/8 "	R4133719	R4133718	R4166926	NR	N/A[358]	R4122688	-	-
-	1-1/8 "	R4133714	R4133715	R4166926	NR	N/A[358]	R4122688	-	-
-	1-1/8 "	R4133719	R4133718	R4166926	NR	N/A[358]	R4122688	-	-
-	1-1/8 "	R4133714	R4133715	R4166926	NR	N/A[358]	R4122688	-	-
-	1-1/4 "	R4133581	R4133581	R4166923	NR	-	-	-	-
-	1-1/4 "	R4133720	R4133721	R4166923	NR	-	-	-	-
-	1-1/4 "	R4133581	R4133582	R4166923	NR	-	-	-	-
-	1-1/4 "	R4133720	R4133721	R4166923	NR	-	-	-	-
-	1.09375	R4133484	R4133485	R4166819	NR	-	-	-	-
-	1.09375	R4133484	R4133485	R4166819	NR	-	-	-	-
23-122700-002[9]	2-1/2 "	R424244X	R424244X[37]	60050266	69270757[41]	-	-	-	-
23-122703-002[186]	2-7/8 "	60050145X	60050145X[37]	60050146	69270702[41]	-	-	-	-
23-122691-002[42]	2-7/8 "	60050145X	60050145X[37]	60050146	69270702[41]	-	-	-	-
-	1-1/2 "	R4033607	R4033607	R4166818	NR	-	-	-	-
-	1-1/2 "	R4033607	R4033607	R4166818	NR	-	-	-	-
-	1-5/8 "	R4133606	R4133606	R415193	NR	-	-	-	-
-	1-5/8 "	R4133338	R4133338	R4166689	NR	-	-	-	-
-	1-5/8 "	R4133338	R4133338	R4166689	NR	-	-	-	-
-	1-5/8 "	R4133338	R4133338	R4166689	NR	-	-	-	-
-	1-5/8 "	R4133338	R4133338	R4166689	NR	-	-	-	-
-	1-3/4 "	R4133400	R4133400	R4166917	NR	-	-	-	-
-	1-3/4 "	R4133400	R4133400	R4166917	NR	-	-	-	-

MAKE MODEL YEAR AXLE CODE AXLE WEIGHT	AXLE & BRK. TYPE	BRK. MFG.	BRAKE SIZE	FMSI	MERITOR DISC PAD OR BRAKE SHOE	MERITOR GUIDE PIN OR RETURN SPRING KIT	MERITOR CALIPER HWD. KIT OR RETURN SPRING KIT	MERITOR ADJUSTER KIT (LEFT WHEEL)	MERITOR ADJUSTER KIT (RIGHT WHEEL)
FORD(Cont.)									
LNT700 SERIES: LOUISVILLE 94.4 BBC SHORT CONVENTIONAL CHASSIS CAB, TANDEM AXLE(Cont.)									
1975									
Single System									
F070	Fa	WG	15 " x 3 "	1245C - 321	R700321	R40H521	R40H9237	R40H3502	R40H3503
	Fa	WG	15 " x 3 "	1245C - 321	R700321	R40H521	R40H9237	R40H3502	R40H3503
	Fa	WG	15 " x 3 "	1245C - 321	R700321	R40H521	R40H9237	R40H3502	R40H3503
	Fa	WG	15 " x 3 "	1245C - 321	R700321	R40H521	R40H9237	R40H3502	R40H3503
Split System									
F070	Fa	WG	15 " x 3 "	1245C - 321	R700321	R40H521	R40H9237	R40H3502	R40H3503
	Fa	WG	15 " x 3 "	1245C - 321	R700321	R40H521	R40H9237	R40H3502	R40H3503
	Fa	WG	15 " x 3 "	1245C - 321	R700321	R40H521	R40H9237	R40H3502	R40H3503
	Fa	WG	15 " x 3 "	1245C - 321	R700321	R40H521	R40H9237	R40H3502	R40H3503
Split System									
F090, F120	Fa	WG	15 " x 3 "	1245C - 321	R700321	R40H521	R40H9237	R40H3502	R40H3503
	Fa	WG	15 " x 3 "	1245C - 321	R700321	R40H521	R40H9237	R40H3502	R40H3503
	Fa	WG	15 " x 3 "	1245C - 321	R700321	R40H521	R40H9237	R40H3502	R40H3503
	Fa	WG	15 " x 3 "	1245C - 321	R700321	R40H521	R40H9237	R40H3502	R40H3503
1974									
F050, F055, F060	Fa	KH	14 " x 2-1/2 "	2060 - 361	Discontinued	R40H596	R40H9219	R40H3536	R40H3537
	Fa	KH	14 " x 2-1/2 "	2060 - 361	Discontinued	R40H596	R40H9219	R40H3536	R40H3537
F070	Fd	DN		7141 - D224	MD224[340]	69310693	60050153	NR	NR
F080, F090	Fd	DN		7149 - D236	MD236[341]	69310693	R40H5523	NR	NR
	Fd	DN		7149 - D236	MD236[341]	69310693	R40H5523	NR	NR
R170, R175	Ra	KH	15 " x 5 "	4646 - 400	R700400	R40H595	R40H9220	R40H3538	R40H3539
	Ra	KH	15 " x 5 "	4646 - 400	R700400	R40H595	R40H9220	R40H3538	R40H3539
	Ra	KH	15 " x 5 "	4646 - 400	R700400	R40H595	R40H9220	R40H3538	R40H3539
	Ra	WG	15 " x 5 "	1252 - 346	R700346	R40H597	R40H9200	R40H3540	R40H3541
	Ra	WG	15 " x 5 "	1252 - 346	R700346	R40H597	R40H9200	R40H3540	R40H3541
R185	Ra	WG	15 " x 6 "	4596 - 381	R700381	R40H597	R40H9200	R40H3540	R40H3541
	Ra	WG	15 " x 6 "	4596 - 381	R700381	R40H597	R40H9200	R40H3540	R40H3541
	Ra	WG	15 " x 7 "	4597 - 383	R700383	R40H597	R40H9200	R40H3540	R40H3541
	Ra	WG	15 " x 7 "	4597 - 383	R700383	R40H597	R40H9200	R40H3540	R40H3541
Single System									
F070	Fa	WG	15 " x 3 "	1245C - 321	R700321	R40H521	R40H9237	R40H3502	R40H3503
	Fa	WG	15 " x 3 "	1245C - 321	R700321	R40H521	R40H9237	R40H3502	R40H3503
	Fa	WG	15 " x 3 "	1245C - 321	R700321	R40H521	R40H9237	R40H3502	R40H3503
	Fa	WG	15 " x 3 "	1245C - 321	R700321	R40H521	R40H9237	R40H3502	R40H3503
Split System									
F070	Fa	WG	15 " x 3 "	1245C - 321	R700321	R40H521	R40H9237	R40H3502	R40H3503
	Fa	WG	15 " x 3 "	1245C - 321	R700321	R40H521	R40H9237	R40H3502	R40H3503
	Fa	WG	15 " x 3 "	1245C - 321	R700321	R40H521	R40H9237	R40H3502	R40H3503
	Fa	WG	15 " x 3 "	1245C - 321	R700321	R40H521	R40H9237	R40H3502	R40H3503
Split System									
F090, F120	Fa	WG	15 " x 3 "	1245C - 321	R700321	R40H521	R40H9237	R40H3502	R40H3503
	Fa	WG	15 " x 3 "	1245C - 321	R700321	R40H521	R40H9237	R40H3502	R40H3503
	Fa	WG	15 " x 3 "	1245C - 321	R700321	R40H521	R40H9237	R40H3502	R40H3503
	Fa	WG	15 " x 3 "	1245C - 321	R700321	R40H521	R40H9237	R40H3502	R40H3503
1973									
F050, F055, F060	Fa	KH	14 " x 2-1/2 "	2060 - 361	Discontinued	R40H596	R40H9219	R40H3536	R40H3537
	Fa	KH	14 " x 2-1/2 "	2060 - 361	Discontinued	R40H596	R40H9219	R40H3536	R40H3537
F070	Fd	DN		7141 - D224	MD224[340]	69310693	60050153	NR	NR
F080, F090	Fd	DN		7149 - D236	MD236[341]	69310693	R40H5523	NR	NR
	Fd	DN		7149 - D236	MD236[341]	69310693	R40H5523	NR	NR
R170, R175	Ra	KH	15 " x 5 "	4646 - 400	R700400	R40H595	R40H9220	R40H3538	R40H3539
	Ra	KH	15 " x 5 "	4646 - 400	R700400	R40H595	R40H9220	R40H3538	R40H3539
	Ra	KH	15 " x 5 "	4646 - 400	R700400	R40H595	R40H9220	R40H3538	R40H3539
	Ra	WG	15 " x 5 "	1252 - 346	R700346	R40H597	R40H9200	R40H3540	R40H3541
	Ra	WG	15 " x 5 "	1252 - 346	R700346	R40H597	R40H9200	R40H3540	R40H3541
R185	Ra	WG	15 " x 6 "	4596 - 381	R700381	R40H597	R40H9200	R40H3540	R40H3541
	Ra	WG	15 " x 6 "	4596 - 381	R700381	R40H597	R40H9200	R40H3540	R40H3541
	Ra	WG	15 " x 7 "	4597 - 383	R700383	R40H597	R40H9200	R40H3540	R40H3541
	Ra	WG	15 " x 7 "	4597 - 383	R700383	R40H597	R40H9200	R40H3540	R40H3541
Single System									
F070	Fa	WG	15 " x 3 "	1245C - 321	R700321	R40H521	R40H9237	R40H3502	R40H3503
	Fa	WG	15 " x 3 "	1245C - 321	R700321	R40H521	R40H9237	R40H3502	R40H3503
	Fa	WG	15 " x 3 "	1245C - 321	R700321	R40H521	R40H9237	R40H3502	R40H3503

9 - 6 Stud, Dayton Rotor, Hat Style
42 - 6 Stud, Dayton Rotor, "U" Style
341 - Use 69160445 for Disc Pad Retainer Clip
37 - Also available as a New unit
186 - 10 Stud
358 - Split System
41 - Aluminum piston
340 - Use 69160457 for Disc Pad Retainer Clip

MERITOR DRUM OR ROTOR NO.	CALIPER OR CYLINDER BORE SIZE	MERITOR CALIPER OR WHEEL CYLINDER (LEFT)	MERITOR CALIPER OR WHEEL CYLINDER (RIGHT)	MERITOR CALIPER OR WHEEL CYLINDER REPAIR KIT	MERITOR CALIPER PISTON	MERITOR MASTER CYLINDER	MERITOR MASTER CYLINDER KIT	MERITOR BRAKE HOSE (LEFT)	MERITOR BRAKE HOSE (RIGHT)
									FORD(Cont.)
LNT700 SERIES: LOUISVILLE 94.4 BBC SHORT CONVENTIONAL CHASSIS CAB, TANDEM AXLE(Cont.)									
-	1-1/8 "	R4133714	R4133715	R4166926	NR	-	-	-	-
-	1-1/8 "	R4133714	R4133715	R4166926	NR	-	-	-	-
-	1-1/8 "	R4133716	R4133717	R4166926	NR	-	-	-	-
-	1-1/8 "	R4133716	R4133717	R4166926	NR	-	-	-	-
-	1-1/8 "	R4133714	R4133715	R4166926	NR	N/A[358]	R4122688	-	-
-	1-1/8 "	R4133719	R4133718	R4166926	NR	N/A[358]	R4122688	-	-
-	1-1/8 "	R4133719	R4133718	R4166926	NR	N/A[358]	R4122688	-	-
-	1-1/8 "	R4133714	R4133715	R4166926	NR	N/A[358]	R4122688	-	-
-	1-1/4 "	R4133581	R4133582	R4166923	NR	-	-	-	-
-	1-1/4 "	R4133720	R4133721	R4166923	NR	-	-	-	-
-	1-1/4 "	R4133581	R4133581	R4166923	NR	-	-	-	-
-	1-1/4 "	R4133720	R4133721	R4166923	NR	-	-	-	-
-	1.09375	R4133484	R4133485	R4166819	NR	-	-	-	-
-	1.09375	R4133484	R4133485	R4166819	NR	-	-	-	-
23-122700-002[9]	2-1/2 "	R424244X	R424244X[37]	60050266	69270757[41]	-	-	-	-
23-122703-002[186]	2-7/8 "	60050145X	60050145X[37]	60050146	69270702[41]	-	-	-	-
23-122691-002[42]	2-7/8 "	60050145X	60050145X[37]	60050146	69270702[41]	-	-	-	-
-	1-1/2 "	R4033607	R4033607	R4166818	NR	-	-	-	-
-	1-1/2 "	R4033607	R4033607	R4166818	NR	-	-	-	-
-	1-5/8 "	R4133606	R4133606	R415193	NR	-	-	-	-
-	1-5/8 "	R4133338	R4133338	R4166689	NR	-	-	-	-
-	1-5/8 "	R4133338	R4133338	R4166689	NR	-	-	-	-
-	1-5/8 "	R4133338	R4133338	R4166689	NR	-	-	-	-
-	1-5/8 "	R4133338	R4133338	R4166689	NR	-	-	-	-
-	1-3/4 "	R4133400	R4133400	R4166917	NR	-	-	-	-
-	1-3/4 "	R4133400	R4133400	R4166917	NR	-	-	-	-
-	1-1/8 "	R4133714	R4133715	R4166926	NR	-	-	-	-
-	1-1/8 "	R4133714	R4133715	R4166926	NR	-	-	-	-
-	1-1/8 "	R4133716	R4133717	R4166926	NR	-	-	-	-
-	1-1/8 "	R4133716	R4133717	R4166926	NR	-	-	-	-
-	1-1/8 "	R4133714	R4133715	R4166926	NR	N/A[358]	R4122688	-	-
-	1-1/8 "	R4133719	R4133718	R4166926	NR	N/A[358]	R4122688	-	-
-	1-1/8 "	R4133714	R4133715	R4166926	NR	N/A[358]	R4122688	-	-
-	1-1/8 "	R4133719	R4133718	R4166926	NR	N/A[358]	R4122688	-	-
-	1-1/4 "	R4133720	R4133721	R4166923	NR	-	-	-	-
-	1-1/4 "	R4133581	R4133581	R4166923	NR	-	-	-	-
-	1-1/4 "	R4133720	R4133721	R4166923	NR	-	-	-	-
-	1-1/4 "	R4133581	R4133582	R4166923	NR	-	-	-	-
-	1.09375	R4133484	R4133485	R4166819	NR	-	-	-	-
-	1.09375	R4133484	R4133485	R4166819	NR	-	-	-	-
23-122700-002[9]	2-1/2 "	R424244X	R424244X[37]	60050266	69270757[41]	-	-	-	-
23-122691-002[42]	2-7/8 "	60050145X	60050145X[37]	60050146	69270702[41]	-	-	-	-
23-122703-002[186]	2-7/8 "	60050145X	60050145X[37]	60050146	69270702[41]	-	-	-	-
-	1-1/2 "	R4033607	R4033607	R4166818	NR	-	-	-	-
-	1-5/8 "	R4133606	R4133606	R415193	NR	-	-	-	-
-	1-1/2 "	R4033607	R4033607	R4166818	NR	-	-	-	-
-	1-5/8 "	R4133338	R4133338	R4166689	NR	-	-	-	-
-	1-5/8 "	R4133338	R4133338	R4166689	NR	-	-	-	-
-	1-5/8 "	R4133338	R4133338	R4166689	NR	-	-	-	-
-	1-5/8 "	R4133338	R4133338	R4166689	NR	-	-	-	-
-	1-3/4 "	R4133400	R4133400	R4166917	NR	-	-	-	-
-	1-3/4 "	R4133400	R4133400	R4166917	NR	-	-	-	-
-	1-1/8 "	R4133714	R4133715	R4166926	NR	-	-	-	-
-	1-1/8 "	R4133716	R4133717	R4166926	NR	-	-	-	-
-	1-1/8 "	R4133714	R4133715	R4166926	NR	-	-	-	-

MAKE MODEL YEAR AXLE CODE AXLE WEIGHT	AXLE & BRK. TYPE	BRK. MFG.	BRAKE SIZE	FMSI	MERITOR DISC PAD OR BRAKE SHOE	MERITOR GUIDE PIN OR RETURN SPRING KIT	MERITOR CALIPER HWD. KIT OR RETURN SPRING KIT	MERITOR ADJUSTER KIT (LEFT WHEEL)	MERITOR ADJUSTER KIT (RIGHT WHEEL)
FORD(Cont.)									
LNT700 SERIES: LOUISVILLE 94.4 BBC SHORT CONVENTIONAL CHASSIS CAB, TANDEM AXLE(Cont.)									
1973	Fa	WG	15 " x 3 "	1245C - 321	R700321	R40H521	R40H9237	R40H3502	R40H3503
Split System									
F070	Fa	WG	15 " x 3 "	1245C - 321	R700321	R40H521	R40H9237	R40H3502	R40H3503
	Fa	WG	15 " x 3 "	1245C - 321	R700321	R40H521	R40H9237	R40H3502	R40H3503
	Fa	WG	15 " x 3 "	1245C - 321	R700321	R40H521	R40H9237	R40H3502	R40H3503
	Fa	WG	15 " x 3 "	1245C - 321	R700321	R40H521	R40H9237	R40H3502	R40H3503
Split System									
F090, F120	Fa	WG	15 " x 3 "	1245C - 321	R700321	R40H521	R40H9237	R40H3502	R40H3503
	Fa	WG	15 " x 3 "	1245C - 321	R700321	R40H521	R40H9237	R40H3502	R40H3503
	Fa	WG	15 " x 3 "	1245C - 321	R700321	R40H521	R40H9237	R40H3502	R40H3503
	Fa	WG	15 " x 3 "	1245C - 321	R700321	R40H521	R40H9237	R40H3502	R40H3503
1972									
F050, F055, F060	Fa	KH	14 " x 2-1/2 "	2060 - 361	Discontinued	R40H596	R40H9219	R40H3536	R40H3537
	Fa	KH	14 " x 2-1/2 "	2060 - 361	Discontinued	R40H596	R40H9219	R40H3536	R40H3537
F070	Fd	DN		7141 - D224	MD224[340]	69310693	60050153	NR	NR
F080, F090	Fd	DN		7149 - D236	MD236[341]	69310693	R40H5523	NR	NR
	Fd	DN		7149 - D236	MD236[341]	69310693	R40H5523	NR	NR
R170, R175	Ra	KH	15 " x 5 "	4646 - 400	R700400	R40H595	R40H9220	R40H3538	R40H3539
	Ra	KH	15 " x 5 "	4646 - 400	R700400	R40H595	R40H9220	R40H3538	R40H3539
	Ra	KH	15 " x 5 "	4646 - 400	R700400	R40H595	R40H9220	R40H3538	R40H3539
	Ra	WG	15 " x 5 "	1252 - 346	R700346	R40H597	R40H9200	R40H3540	R40H3541
	Ra	WG	15 " x 5 "	1252 - 346	R700346	R40H597	R40H9200	R40H3540	R40H3541
R185	Ra	WG	15 " x 6 "	4596 - 381	R700381	R40H597	R40H9200	R40H3540	R40H3541
	Ra	WG	15 " x 6 "	4596 - 381	R700381	R40H597	R40H9200	R40H3540	R40H3541
	Ra	WG	15 " x 7 "	4597 - 383	R700383	R40H597	R40H9200	R40H3540	R40H3541
	Ra	WG	15 " x 7 "	4597 - 383	R700383	R40H597	R40H9200	R40H3540	R40H3541
Single System									
F070	Fa	WG	15 " x 3 "	1245C - 321	R700321	R40H521	R40H9237	R40H3502	R40H3503
	Fa	WG	15 " x 3 "	1245C - 321	R700321	R40H521	R40H9237	R40H3502	R40H3503
	Fa	WG	15 " x 3 "	1245C - 321	R700321	R40H521	R40H9237	R40H3502	R40H3503
	Fa	WG	15 " x 3 "	1245C - 321	R700321	R40H521	R40H9237	R40H3502	R40H3503
Split System									
F070	Fa	WG	15 " x 3 "	1245C - 321	R700321	R40H521	R40H9237	R40H3502	R40H3503
	Fa	WG	15 " x 3 "	1245C - 321	R700321	R40H521	R40H9237	R40H3502	R40H3503
	Fa	WG	15 " x 3 "	1245C - 321	R700321	R40H521	R40H9237	R40H3502	R40H3503
	Fa	WG	15 " x 3 "	1245C - 321	R700321	R40H521	R40H9237	R40H3502	R40H3503
Split System									
F090, F120	Fa	WG	15 " x 3 "	1245C - 321	R700321	R40H521	R40H9237	R40H3502	R40H3503
	Fa	WG	15 " x 3 "	1245C - 321	R700321	R40H521	R40H9237	R40H3502	R40H3503
	Fa	WG	15 " x 3 "	1245C - 321	R700321	R40H521	R40H9237	R40H3502	R40H3503
	Fa	WG	15 " x 3 "	1245C - 321	R700321	R40H521	R40H9237	R40H3502	R40H3503
1971									
F050, F055, F060	Fa	KH	14 " x 2-1/2 "	2060 - 361	Discontinued	R40H596	R40H9219	R40H3536	R40H3537
	Fa	KH	14 " x 2-1/2 "	2060 - 361	Discontinued	R40H596	R40H9219	R40H3536	R40H3537
F070	Fd	DN		7141 - D224	MD224[340]	69310693	60050153	NR	NR
F080, F090	Fd	DN		7149 - D236	MD236[341]	69310693	R40H5523	NR	NR
	Fd	DN		7149 - D236	MD236[341]	69310693	R40H5523	NR	NR
R170, R175	Ra	KH	15 " x 5 "	4646 - 400	R700400	R40H595	R40H9220	R40H3538	R40H3539
	Ra	KH	15 " x 5 "	4646 - 400	R700400	R40H595	R40H9220	R40H3538	R40H3539
	Ra	KH	15 " x 5 "	4646 - 400	R700400	R40H595	R40H9220	R40H3538	R40H3539
	Ra	WG	15 " x 5 "	1252 - 346	R700346	R40H597	R40H9200	R40H3540	R40H3541
	Ra	WG	15 " x 5 "	1252 - 346	R700346	R40H597	R40H9200	R40H3540	R40H3541
R185	Ra	WG	15 " x 6 "	4596 - 381	R700381	R40H597	R40H9200	R40H3540	R40H3541
	Ra	WG	15 " x 6 "	4596 - 381	R700381	R40H597	R40H9200	R40H3540	R40H3541
	Ra	WG	15 " x 7 "	4597 - 383	R700383	R40H597	R40H9200	R40H3540	R40H3541
	Ra	WG	15 " x 7 "	4597 - 383	R700383	R40H597	R40H9200	R40H3540	R40H3541
Single System									
F070	Fa	WG	15 " x 3 "	1245C - 321	R700321	R40H521	R40H9237	R40H3502	R40H3503
	Fa	WG	15 " x 3 "	1245C - 321	R700321	R40H521	R40H9237	R40H3502	R40H3503
	Fa	WG	15 " x 3 "	1245C - 321	R700321	R40H521	R40H9237	R40H3502	R40H3503
	Fa	WG	15 " x 3 "	1245C - 321	R700321	R40H521	R40H9237	R40H3502	R40H3503
Split System									
F070	Fa	WG	15 " x 3 "	1245C - 321	R700321	R40H521	R40H9237	R40H3502	R40H3503
	Fa	WG	15 " x 3 "	1245C - 321	R700321	R40H521	R40H9237	R40H3502	R40H3503

9 - 6 Stud, Dayton Rotor, Hat Style
42 - 6 Stud, Dayton Rotor, "U" Style
341 - Use 69160445 for Disc Pad Retainer Clip
37 - Also available as a New unit
186 - 10 Stud
358 - Split System
41 - Aluminum piston
340 - Use 69160457 for Disc Pad Retainer Clip

MERITOR DRUM OR ROTOR NO.	CALIPER OR CYLINDER BORE SIZE	MERITOR CALIPER OR WHEEL CYLINDER (LEFT)	MERITOR CALIPER OR WHEEL CYLINDER (RIGHT)	MERITOR CALIPER OR WHEEL CYLINDER REPAIR KIT	MERITOR CALIPER PISTON	MERITOR MASTER CYLINDER	MERITOR MASTER CYLINDER KIT	MERITOR BRAKE HOSE (LEFT)	MERITOR BRAKE HOSE (RIGHT)
									FORD(Cont.)
LNT700 SERIES: LOUISVILLE 94.4 BBC SHORT CONVENTIONAL CHASSIS CAB, TANDEM AXLE(Cont.)									
-	1-1/8 "	R4133716	R4133717	R4166926	NR	-	-	-	-
-	1-1/8 "	R4133714	R4133715	R4166926	NR	N/A[358]	R4122688	-	-
-	1-1/8 "	R4133719	R4133718	R4166926	NR	N/A[358]	R4122688	-	-
-	1-1/8 "	R4133719	R4133718	R4166926	NR	N/A[358]	R4122688	-	-
-	1-1/8 "	R4133714	R4133715	R4166926	NR	N/A[358]	R4122688	-	-
-	1-1/4 "	R4133581	R4133581	R4166923	NR	-	-	-	-
-	1-1/4 "	R4133720	R4133721	R4166923	NR	-	-	-	-
-	1-1/4 "	R4133720	R4133721	R4166923	NR	-	-	-	-
-	1-1/4 "	R4133581	R4133582	R4166923	NR	-	-	-	-
-	1.09375	R4133484	R4133485	R4166819	NR	-	-	-	-
-	1.09375	R4133484	R4133485	R4166819	NR	-	-	-	-
23-122700-002[9]	2-1/2 "	R424244X	R424244X[37]	60050266	69270757[41]	-	-	-	-
23-122691-002[42]	2-7/8 "	60050145X	60050145X[37]	60050146	69270702[41]	-	-	-	-
23-122703-002[186]	2-7/8 "	60050145X	60050145X[37]	60050146	69270702[41]	-	-	-	-
-	1-5/8 "	R4133606	R4133606	R415193	NR	-	-	-	-
-	1-1/2 "	R4033607	R4033607	R4166818	NR	-	-	-	-
-	1-1/2 "	R4033607	R4033607	R4166818	NR	-	-	-	-
-	1-5/8 "	R4133338	R4133338	R4166689	NR	-	-	-	-
-	1-5/8 "	R4133338	R4133338	R4166689	NR	-	-	-	-
-	1-5/8 "	R4133338	R4133338	R4166689	NR	-	-	-	-
-	1-5/8 "	R4133338	R4133338	R4166689	NR	-	-	-	-
-	1-3/4 "	R4133400	R4133400	R4166917	NR	-	-	-	-
-	1-3/4 "	R4133400	R4133400	R4166917	NR	-	-	-	-
-	1-1/8 "	R4133716	R4133717	R4166926	NR	-	-	-	-
-	1-1/8 "	R4133716	R4133717	R4166926	NR	-	-	-	-
-	1-1/8 "	R4133714	R4133715	R4166926	NR	-	-	-	-
-	1-1/8 "	R4133714	R4133715	R4166926	NR	-	-	-	-
-	1-1/8 "	R4133719	R4133718	R4166926	NR	N/A[358]	R4122688	-	-
-	1-1/8 "	R4133719	R4133718	R4166926	NR	N/A[358]	R4122688	-	-
-	1-1/8 "	R4133714	R4133715	R4166926	NR	N/A[358]	R4122688	-	-
-	1-1/8 "	R4133714	R4133715	R4166926	NR	N/A[358]	R4122688	-	-
-	1-1/4 "	R4133720	R4133721	R4166923	NR	-	-	-	-
-	1-1/4 "	R4133581	R4133582	R4166923	NR	-	-	-	-
-	1-1/4 "	R4133581	R4133581	R4166923	NR	-	-	-	-
-	1-1/4 "	R4133720	R4133721	R4166923	NR	-	-	-	-
-	1.09375	R4133484	R4133485	R4166819	NR	-	-	-	-
-	1.09375	R4133484	R4133485	R4166819	NR	-	-	-	-
23-122700-002[9]	2-1/2 "	R424244X	R424244X[37]	60050266	69270757[41]	-	-	-	-
23-122703-002[186]	2-7/8 "	60050145X	60050145X[37]	60050146	69270702[41]	-	-	-	-
23-122691-002[42]	2-7/8 "	60050145X	60050145X[37]	60050146	69270702[41]	-	-	-	-
-	1-1/2 "	R4033607	R4033607	R4166818	NR	-	-	-	-
-	1-1/2 "	R4033607	R4033607	R4166818	NR	-	-	-	-
-	1-5/8 "	R4133606	R4133606	R415193	NR	-	-	-	-
-	1-5/8 "	R4133338	R4133338	R4166689	NR	-	-	-	-
-	1-5/8 "	R4133338	R4133338	R4166689	NR	-	-	-	-
-	1-5/8 "	R4133338	R4133338	R4166689	NR	-	-	-	-
-	1-5/8 "	R4133338	R4133338	R4166689	NR	-	-	-	-
-	1-3/4 "	R4133400	R4133400	R4166917	NR	-	-	-	-
-	1-3/4 "	R4133400	R4133400	R4166917	NR	-	-	-	-
-	1-1/8 "	R4133714	R4133715	R4166926	NR	-	-	-	-
-	1-1/8 "	R4133716	R4133717	R4166926	NR	-	-	-	-
-	1-1/8 "	R4133714	R4133715	R4166926	NR	-	-	-	-
-	1-1/8 "	R4133716	R4133717	R4166926	NR	-	-	-	-
-	1-1/8 "	R4133719	R4133718	R4166926	NR	N/A[358]	R4122688	-	-
-	1-1/8 "	R4133714	R4133715	R4166926	NR	N/A[358]	R4122688	-	-

MAKE MODEL YEAR AXLE CODE AXLE WEIGHT	AXLE & BRK. TYPE	BRK. MFG.	BRAKE SIZE	FMSI	MERITOR DISC PAD OR BRAKE SHOE	MERITOR GUIDE PIN OR RETURN SPRING KIT	MERITOR CALIPER HWD. KIT OR RETURN SPRING KIT	MERITOR ADJUSTER KIT (LEFT WHEEL)	MERITOR ADJUSTER KIT (RIGHT WHEEL)
FORD(Cont.)									
LNT700 SERIES: LOUISVILLE 94.4 BBC SHORT CONVENTIONAL CHASSIS CAB, TANDEM AXLE(Cont.)									
1971									
	Fa	WG	15 " x 3 "	1245C - 321	R700321	R40H521	R40H9237	R40H3502	R40H3503
	Fa	WG	15 " x 3 "	1245C - 321	R700321	R40H521	R40H9237	R40H3502	R40H3503
Split System									
F090, F120	Fa	WG	15 " x 3 "	1245C - 321	R700321	R40H521	R40H9237	R40H3502	R40H3503
	Fa	WG	15 " x 3 "	1245C - 321	R700321	R40H521	R40H9237	R40H3502	R40H3503
	Fa	WG	15 " x 3 "	1245C - 321	R700321	R40H521	R40H9237	R40H3502	R40H3503
	Fa	WG	15 " x 3 "	1245C - 321	R700321	R40H521	R40H9237	R40H3502	R40H3503
1970									
F050, F055, F060	Fa	KH	14 " x 2-1/2 "	2060 - 361	Discontinued	R40H596	R40H9219	R40H3536	R40H3537
	Fa	KH	14 " x 2-1/2 "	2060 - 361	Discontinued	R40H596	R40H9219	R40H3536	R40H3537
F070	Fd	DN		7141 - D224	MD224[340]	69310693	60050153	NR	NR
F080, F090	Fd	DN		7149 - D236	MD236[341]	69310693	R40H5523	NR	NR
	Fd	DN		7149 - D236	MD236[341]	69310693	R40H5523	NR	NR
R170, R175	Ra	KH	15 " x 5 "	4646 - 400	R700400	R40H595	R40H9220	R40H3538	R40H3539
	Ra	KH	15 " x 5 "	4646 - 400	R700400	R40H595	R40H9220	R40H3538	R40H3539
	Ra	KH	15 " x 5 "	4646 - 400	R700400	R40H595	R40H9220	R40H3538	R40H3539
	Ra	WG	15 " x 5 "	1252 - 346	R700346	R40H597	R40H9200	R40H3540	R40H3541
	Ra	WG	15 " x 5 "	1252 - 346	R700346	R40H597	R40H9200	R40H3540	R40H3541
R185	Ra	WG	15 " x 6 "	4596 - 381	R700381	R40H597	R40H9200	R40H3540	R40H3541
	Ra	WG	15 " x 6 "	4596 - 381	R700381	R40H597	R40H9200	R40H3540	R40H3541
	Ra	WG	15 " x 7 "	4597 - 383	R700383	R40H597	R40H9200	R40H3540	R40H3541
	Ra	WG	15 " x 7 "	4597 - 383	R700383	R40H597	R40H9200	R40H3540	R40H3541
Single System									
F070	Fa	WG	15 " x 3 "	1245C - 321	R700321	R40H521	R40H9237	R40H3502	R40H3503
	Fa	WG	15 " x 3 "	1245C - 321	R700321	R40H521	R40H9237	R40H3502	R40H3503
	Fa	WG	15 " x 3 "	1245C - 321	R700321	R40H521	R40H9237	R40H3502	R40H3503
	Fa	WG	15 " x 3 "	1245C - 321	R700321	R40H521	R40H9237	R40H3502	R40H3503
Split System									
F070	Fa	WG	15 " x 3 "	1245C - 321	R700321	R40H521	R40H9237	R40H3502	R40H3503
	Fa	WG	15 " x 3 "	1245C - 321	R700321	R40H521	R40H9237	R40H3502	R40H3503
	Fa	WG	15 " x 3 "	1245C - 321	R700321	R40H521	R40H9237	R40H3502	R40H3503
	Fa	WG	15 " x 3 "	1245C - 321	R700321	R40H521	R40H9237	R40H3502	R40H3503
Split System									
F090, F120	Fa	WG	15 " x 3 "	1245C - 321	R700321	R40H521	R40H9237	R40H3502	R40H3503
	Fa	WG	15 " x 3 "	1245C - 321	R700321	R40H521	R40H9237	R40H3502	R40H3503
	Fa	WG	15 " x 3 "	1245C - 321	R700321	R40H521	R40H9237	R40H3502	R40H3503
	Fa	WG	15 " x 3 "	1245C - 321	R700321	R40H521	R40H9237	R40H3502	R40H3503
1969									
F050, F055, F060	Fa	KH	14 " x 2-1/2 "	2060 - 361	Discontinued	R40H596	R40H9219	R40H3536	R40H3537
	Fa	KH	14 " x 2-1/2 "	2060 - 361	Discontinued	R40H596	R40H9219	R40H3536	R40H3537
F070	Fd	DN		7141 - D224	MD224[340]	69310693	60050153	NR	NR
F080, F090	Fd	DN		7149 - D236	MD236[341]	69310693	R40H5523	NR	NR
	Fd	DN		7149 - D236	MD236[341]	69310693	R40H5523	NR	NR
R170, R175	Ra	KH	15 " x 5 "	4646 - 400	R700400	R40H595	R40H9220	R40H3538	R40H3539
	Ra	KH	15 " x 5 "	4646 - 400	R700400	R40H595	R40H9220	R40H3538	R40H3539
	Ra	KH	15 " x 5 "	4646 - 400	R700400	R40H595	R40H9220	R40H3538	R40H3539
	Ra	WG	15 " x 5 "	1252 - 346	R700346	R40H597	R40H9200	R40H3540	R40H3541
	Ra	WG	15 " x 5 "	1252 - 346	R700346	R40H597	R40H9200	R40H3540	R40H3541
R185	Ra	WG	15 " x 6 "	4596 - 381	R700381	R40H597	R40H9200	R40H3540	R40H3541
	Ra	WG	15 " x 6 "	4596 - 381	R700381	R40H597	R40H9200	R40H3540	R40H3541
	Ra	WG	15 " x 7 "	4597 - 383	R700383	R40H597	R40H9200	R40H3540	R40H3541
	Ra	WG	15 " x 7 "	4597 - 383	R700383	R40H597	R40H9200	R40H3540	R40H3541
Single System									
F070	Fa	WG	15 " x 3 "	1245C - 321	R700321	R40H521	R40H9237	R40H3502	R40H3503
	Fa	WG	15 " x 3 "	1245C - 321	R700321	R40H521	R40H9237	R40H3502	R40H3503
	Fa	WG	15 " x 3 "	1245C - 321	R700321	R40H521	R40H9237	R40H3502	R40H3503
	Fa	WG	15 " x 3 "	1245C - 321	R700321	R40H521	R40H9237	R40H3502	R40H3503
Split System									
F070	Fa	WG	15 " x 3 "	1245C - 321	R700321	R40H521	R40H9237	R40H3502	R40H3503
	Fa	WG	15 " x 3 "	1245C - 321	R700321	R40H521	R40H9237	R40H3502	R40H3503
	Fa	WG	15 " x 3 "	1245C - 321	R700321	R40H521	R40H9237	R40H3502	R40H3503
	Fa	WG	15 " x 3 "	1245C - 321	R700321	R40H521	R40H9237	R40H3502	R40H3503
Split System									
F090, F120	Fa	WG	15 " x 3 "	1245C - 321	R700321	R40H521	R40H9237	R40H3502	R40H3503

9 - 6 Stud, Dayton Rotor, Hat Style
42 - 6 Stud, Dayton Rotor, "U" Style
341 - Use 69160445 for Disc Pad Retainer Clip
37 - Also available as a New unit
186 - 10 Stud
358 - Split System
41 - Aluminum piston
340 - Use 69160457 for Disc Pad Retainer Clip

MERITOR DRUM OR ROTOR NO.	CALIPER OR CYLINDER BORE SIZE	MERITOR CALIPER OR WHEEL CYLINDER (LEFT)	MERITOR CALIPER OR WHEEL CYLINDER (RIGHT)	MERITOR CALIPER OR WHEEL CYLINDER REPAIR KIT	MERITOR CALIPER PISTON	MERITOR MASTER CYLINDER	MERITOR MASTER CYLINDER KIT	MERITOR BRAKE HOSE (LEFT)	MERITOR BRAKE HOSE (RIGHT)
									FORD(Cont.)
LNT700 SERIES: LOUISVILLE 94.4 BBC SHORT CONVENTIONAL CHASSIS CAB, TANDEM AXLE(Cont.)									
-	1-1/8 "	R4133719	R4133718	R4166926	NR	N/A[358]	R4122688	-	-
-	1-1/8 "	R4133714	R4133715	R4166926	NR	N/A[358]	R4122688	-	-
-	1-1/4 "	R4133720	R4133721	R4166923	NR	-	-	-	-
-	1-1/4 "	R4133581	R4133582	R4166923	NR	-	-	-	-
-	1-1/4 "	R4133720	R4133721	R4166923	NR	-	-	-	-
-	1-1/4 "	R4133581	R4133581	R4166923	NR	-	-	-	-
-	1.09375	R4133484	R4133485	R4166819	NR	-	-	-	-
-	1.09375	R4133484	R4133485	R4166819	NR	-	-	-	-
23-122700-002[9]	2-1/2 "	R424244X	R424244X[37]	60050266	69270757[41]	-	-	-	-
23-122691-002[42]	2-7/8 "	60050145X	60050145X[37]	60050146	69270702[41]	-	-	-	-
23-122703-002[186]	2-7/8 "	60050145X	60050145X[37]	60050146	69270702[41]	-	-	-	-
-	1-1/2 "	R4033607	R4033607	R4166818	NR	-	-	-	-
-	1-5/8 "	R4133606	R4133606	R415193	NR	-	-	-	-
-	1-1/2 "	R4033607	R4033607	R4166818	NR	-	-	-	-
-	1-5/8 "	R4133338	R4133338	R4166689	NR	-	-	-	-
-	1-5/8 "	R4133338	R4133338	R4166689	NR	-	-	-	-
-	1-5/8 "	R4133338	R4133338	R4166689	NR	-	-	-	-
-	1-5/8 "	R4133338	R4133338	R4166689	NR	-	-	-	-
-	1-3/4 "	R4133400	R4133400	R4166917	NR	-	-	-	-
-	1-3/4 "	R4133400	R4133400	R4166917	NR	-	-	-	-
-	1-1/8 "	R4133714	R4133715	R4166926	NR	-	-	-	-
-	1-1/8 "	R4133716	R4133717	R4166926	NR	-	-	-	-
-	1-1/8 "	R4133714	R4133715	R4166926	NR	-	-	-	-
-	1-1/8 "	R4133716	R4133717	R4166926	NR	-	-	-	-
-	1-1/8 "	R4133719	R4133718	R4166926	NR	N/A[358]	R4122688	-	-
-	1-1/8 "	R4133714	R4133715	R4166926	NR	N/A[358]	R4122688	-	-
-	1-1/8 "	R4133719	R4133718	R4166926	NR	N/A[358]	R4122688	-	-
-	1-1/8 "	R4133714	R4133715	R4166926	NR	N/A[358]	R4122688	-	-
-	1-1/4 "	R4133720	R4133721	R4166923	NR	-	-	-	-
-	1-1/4 "	R4133581	R4133581	R4166923	NR	-	-	-	-
-	1-1/4 "	R4133720	R4133721	R4166923	NR	-	-	-	-
-	1-1/4 "	R4133581	R4133582	R4166923	NR	-	-	-	-
-	1.09375	R4133484	R4133485	R4166819	NR	-	-	-	-
-	1.09375	R4133484	R4133485	R4166819	NR	-	-	-	-
23-122700-002[9]	2-1/2 "	R424244X	R424244X[37]	60050266	69270757[41]	-	-	-	-
23-122691-002[42]	2-7/8 "	60050145X	60050145X[37]	60050146	69270702[41]	-	-	-	-
23-122703-002[186]	2-7/8 "	60050145X	60050145X[37]	60050146	69270702[41]	-	-	-	-
-	1-1/2 "	R4033607	R4033607	R4166818	NR	-	-	-	-
-	1-5/8 "	R4133606	R4133606	R415193	NR	-	-	-	-
-	1-1/2 "	R4033607	R4033607	R4166818	NR	-	-	-	-
-	1-5/8 "	R4133338	R4133338	R4166689	NR	-	-	-	-
-	1-5/8 "	R4133338	R4133338	R4166689	NR	-	-	-	-
-	1-5/8 "	R4133338	R4133338	R4166689	NR	-	-	-	-
-	1-5/8 "	R4133338	R4133338	R4166689	NR	-	-	-	-
-	1-3/4 "	R4133400	R4133400	R4166917	NR	-	-	-	-
-	1-3/4 "	R4133400	R4133400	R4166917	NR	-	-	-	-
-	1-1/8 "	R4133716	R4133717	R4166926	NR	-	-	-	-
-	1-1/8 "	R4133714	R4133715	R4166926	NR	-	-	-	-
-	1-1/8 "	R4133716	R4133717	R4166926	NR	-	-	-	-
-	1-1/8 "	R4133714	R4133715	R4166926	NR	-	-	-	-
-	1-1/8 "	R4133714	R4133715	R4166926	NR	N/A[358]	R4122688	-	-
-	1-1/8 "	R4133719	R4133718	R4166926	NR	N/A[358]	R4122688	-	-
-	1-1/8 "	R4133719	R4133718	R4166926	NR	N/A[358]	R4122688	-	-
-	1-1/8 "	R4133714	R4133715	R4166926	NR	N/A[358]	R4122688	-	-
-	1-1/4 "	R4133720	R4133721	R4166923	NR	-	-	-	-

MAKE MODEL YEAR AXLE CODE AXLE WEIGHT	AXLE & BRK. TYPE	BRK. MFG.	BRAKE SIZE	FMSI	MERITOR DISC PAD OR BRAKE SHOE	MERITOR GUIDE PIN OR RETURN SPRING KIT	MERITOR CALIPER HWD. KIT OR RETURN SPRING KIT	MERITOR ADJUSTER KIT (LEFT WHEEL)	MERITOR ADJUSTER KIT (RIGHT WHEEL)
FORD(Cont.)									
LNT700 SERIES: LOUISVILLE 94.4 BBC SHORT CONVENTIONAL CHASSIS CAB, TANDEM AXLE(Cont.)									
1969									
	Fa	WG	15 " x 3 "	1245C - 321	R700321	R40H521	R40H9237	R40H3502	R40H3503
	Fa	WG	15 " x 3 "	1245C - 321	R700321	R40H521	R40H9237	R40H3502	R40H3503
	Fa	WG	15 " x 3 "	1245C - 321	R700321	R40H521	R40H9237	R40H3502	R40H3503
1968									
F050, F055, F060	Fa	KH	14 " x 2-1/2 "	2060 - 361	Discontinued	R40H596	R40H9219	R40H3536	R40H3537
	Fa	KH	14 " x 2-1/2 "	2060 - 361	Discontinued	R40H596	R40H9219	R40H3536	R40H3537
F070	Fd	DN		7141 - D224	MD224[340]	69310693	60050153	NR	NR
F080, F090	Fd	DN		7149 - D236	MD236[341]	69310693	R40H5523	NR	NR
	Fd	DN		7149 - D236	MD236[341]	69310693	R40H5523	NR	NR
R170, R175	Ra	KH	15 " x 5 "	4646 - 400	R700400	R40H595	R40H9220	R40H3538	R40H3539
	Ra	KH	15 " x 5 "	4646 - 400	R700400	R40H595	R40H9220	R40H3538	R40H3539
	Ra	KH	15 " x 5 "	4646 - 400	R700400	R40H595	R40H9220	R40H3538	R40H3539
	Ra	WG	15 " x 5 "	1252 - 346	R700346	R40H597	R40H9200	R40H3540	R40H3541
	Ra	WG	15 " x 5 "	1252 - 346	R700346	R40H597	R40H9200	R40H3540	R40H3541
R185	Ra	WG	15 " x 6 "	4596 - 381	R700381	R40H597	R40H9200	R40H3540	R40H3541
	Ra	WG	15 " x 6 "	4596 - 381	R700381	R40H597	R40H9200	R40H3540	R40H3541
	Ra	WG	15 " x 7 "	4597 - 383	R700383	R40H597	R40H9200	R40H3540	R40H3541
	Ra	WG	15 " x 7 "	4597 - 383	R700383	R40H597	R40H9200	R40H3540	R40H3541
Single System									
F070	Fa	WG	15 " x 3 "	1245C - 321	R700321	R40H521	R40H9237	R40H3502	R40H3503
	Fa	WG	15 " x 3 "	1245C - 321	R700321	R40H521	R40H9237	R40H3502	R40H3503
	Fa	WG	15 " x 3 "	1245C - 321	R700321	R40H521	R40H9237	R40H3502	R40H3503
	Fa	WG	15 " x 3 "	1245C - 321	R700321	R40H521	R40H9237	R40H3502	R40H3503
Split System									
F070	Fa	WG	15 " x 3 "	1245C - 321	R700321	R40H521	R40H9237	R40H3502	R40H3503
	Fa	WG	15 " x 3 "	1245C - 321	R700321	R40H521	R40H9237	R40H3502	R40H3503
	Fa	WG	15 " x 3 "	1245C - 321	R700321	R40H521	R40H9237	R40H3502	R40H3503
	Fa	WG	15 " x 3 "	1245C - 321	R700321	R40H521	R40H9237	R40H3502	R40H3503
Split System									
F090, F120	Fa	WG	15 " x 3 "	1245C - 321	R700321	R40H521	R40H9237	R40H3502	R40H3503
	Fa	WG	15 " x 3 "	1245C - 321	R700321	R40H521	R40H9237	R40H3502	R40H3503
	Fa	WG	15 " x 3 "	1245C - 321	R700321	R40H521	R40H9237	R40H3502	R40H3503
	Fa	WG	15 " x 3 "	1245C - 321	R700321	R40H521	R40H9237	R40H3502	R40H3503
LNT800 SERIES: LOUISVILLE 94.4 BBC SHORT CONVENTIONAL CHASSIS CAB, TANDEM AXLE									
1992									
	Fd	DN		7141 - D224	MD224[340]	69310693	60050153	NR	NR
	Fd	DN		7149 - D236	MD236[341]	69310693	69310782	NR	NR
	Fd	DN		7149 - D236	MD236[341]	69310693	69310782	NR	NR
	Fd	DN		7149 - D236	MD236[341]	69310693	69310782	NR	NR
	Ra	LG	15 " x 7 "	4505A - 544	N/A	R40H618	NR	SP7887S	SP7887S
	Ra	LG	15 " x 7 "	4505A - 544	N/A	R40H618	NR	NR	NR
1991									
	Fd	DN		7141 - D224	MD224[340]	69310693	60050153	NR	NR
	Fd	DN		7149 - D236	MD236[341]	69310693	69310782	NR	NR
	Fd	DN		7149 - D236	MD236[341]	69310693	69310782	NR	NR
	Fd	DN		7149 - D236	MD236[341]	69310693	69310782	NR	NR
	Ra	LG	15 " x 7 "	4505A - 544	N/A	R40H618	NR	NR	NR
	Ra	LG	15 " x 7 "	4505A - 544	N/A	R40H618	NR	SP7887S	SP7887S
1990									
	Fd	DN		7149 - D236	MD236[341]	69310693	69310782	NR	NR
	Fd	DN		7149 - D236	MD236[341]	69310693	69310782	NR	NR
	Fd	DN		7149 - D236	MD236[341]	69310693	69310782	NR	NR
	Fd	DN		7141 - D224	MD224[340]	69310693	60050153	NR	NR
	Ra	LG	15 " x 7 "	4505A - 544	N/A	R40H618	NR	NR	NR
	Ra	LG	15 " x 7 "	4505A - 544	N/A	R40H618	NR	SP7887S	SP7887S
1989									
	Fd	DN		7141 - D224	MD224[340]	69310693	60050153	NR	NR
	Fd	DN		7149 - D236	MD236[341]	69310693	69310782[43]	NR	NR
	Fd	DN		7149 - D236	MD236[341]	69310693	69310782[43]	NR	NR
	Fd	DN		7149 - D236	MD236[341]	69310693	69310782[43]	NR	NR
	Ra	LG	15 " x 7 "	4505A - 544	N/A	R40H618	NR	SP7887S	SP7887S
	Ra	LG	15 " x 7 "	4505A - 544	N/A	R40H618	NR	NR	NR
1988									
	Fd	DN		7149 - D236	MD236[341]	69310693	69310782[43]	NR	NR

9 - 6 Stud, Dayton Rotor, Hat Style
42 - 6 Stud, Dayton Rotor, "U" Style
186 - 10 Stud
37 - Also available as a New unit
43 - For Applications Taking A Longer Shim, Use R404151706
187 - 6 Stud, 6.443" Hub
41 - Aluminum piston
53 - Power Brakes
188 - 6 Stud, 9.251" Hub

MERITOR DRUM OR ROTOR NO.	CALIPER OR CYLINDER BORE SIZE	MERITOR CALIPER OR WHEEL CYLINDER (LEFT)	MERITOR CALIPER OR WHEEL CYLINDER (RIGHT)	MERITOR CALIPER OR WHEEL CYLINDER REPAIR KIT	MERITOR CALIPER PISTON	MERITOR MASTER CYLINDER	MERITOR MASTER CYLINDER KIT	MERITOR BRAKE HOSE (LEFT)	MERITOR BRAKE HOSE (RIGHT)
									FORD(Cont.)
LNT700 SERIES: LOUISVILLE 94.4 BBC SHORT CONVENTIONAL CHASSIS CAB, TANDEM AXLE(Cont.)									
-	1-1/4 "	R4133581	R4133581	R4166923	NR	-	-	-	-
-	1-1/4 "	R4133720	R4133721	R4166923	NR	-	-	-	-
-	1-1/4 "	R4133581	R4133582	R4166923	NR	-	-	-	-
-	1.09375	R4133484	R4133485	R4166819	NR	-	-	-	-
-	1.09375	R4133484	R4133485	R4166819	NR	-	-	-	-
23-122700-002[9]	2-1/2 "	R424244X	R424244X[37]	60050266	69270757[41]	-	-	-	-
23-122703-002[186]	2-7/8 "	60050145X	60050145X[37]	60050146	69270702[41]	-	-	-	-
23-122691-002[42]	2-7/8 "	60050145X	60050145X[37]	60050146	69270702[41]	-	-	-	-
-	1-1/2 "	R4033607	R4033607	R4166818	NR	-	-	-	-
-	1-5/8 "	R4133606	R4133606	R415193	NR	-	-	-	-
-	1-1/2 "	R4033607	R4033607	R4166818	NR	-	-	-	-
-	1-5/8 "	R4133338	R4133338	R4166689	NR	-	-	-	-
-	1-5/8 "	R4133338	R4133338	R4166689	NR	-	-	-	-
-	1-5/8 "	R4133338	R4133338	R4166689	NR	-	-	-	-
-	1-5/8 "	R4133338	R4133338	R4166689	NR	-	-	-	-
-	1-3/4 "	R4133400	R4133400	R4166917	NR	-	-	-	-
-	1-3/4 "	R4133400	R4133400	R4166917	NR	-	-	-	-
-	1-1/8 "	R4133716	R4133717	R4166926	NR	-	-	-	-
-	1-1/8 "	R4133714	R4133715	R4166926	NR	-	-	-	-
-	1-1/8 "	R4133716	R4133717	R4166926	NR	-	-	-	-
-	1-1/8 "	R4133714	R4133715	R4166926	NR	-	-	-	-
-	1-1/8 "	R4133714	R4133715	R4166926	NR	N/A[358]	R4122688	-	-
-	1-1/8 "	R4133719	R4133718	R4166926	NR	N/A[358]	R4122688	-	-
-	1-1/8 "	R4133719	R4133718	R4166926	NR	N/A[358]	R4122688	-	-
-	1-1/8 "	R4133714	R4133715	R4166926	NR	N/A[358]	R4122688	-	-
-	1-1/4 "	R4133720	R4133721	R4166923	NR	-	-	-	-
-	1-1/4 "	R4133581	R4133581	R4166923	NR	-	-	-	-
-	1-1/4 "	R4133581	R4133582	R4166923	NR	-	-	-	-
-	1-1/4 "	R4133720	R4133721	R4166923	NR	-	-	-	-
LNT800 SERIES: LOUISVILLE 94.4 BBC SHORT CONVENTIONAL CHASSIS CAB, TANDEM AXLE									
23-122700-002[9]	2-1/2 "	R424244X	R424244X[37]	60050266	69270757[41]	R4111995[53]	-	R4577454	R4577455
23-122703-002[186]	2-7/8 "	60050145X	60050145X[37]	60050146	69270702[41]	R4111995[53]	-	R4577454	R4577455
23-122743-002[187]	2-7/8 "	60050145X	60050145X[37]	60050146	69270702[41]	R4111995[53]	-	R4577454	R4577455
23-122691-002[188]	2-7/8 "	60050145X	60050145X[37]	60050146	69270702[41]	R4111995[53]	-	R4577454	R4577455
N/A	1-3/4 "	201183X	201184X[329]	SP7873S	NR	-	-	R4577870	R4577870
N/A	1-3/4 "	201179X	201180X	SP7873S	SP7880S[204]	-	-	R4577870	R4577870
23-122700-002[9]	2-1/2 "	R424244X	R424244X[37]	60050266	69270757[41]	R4111995[53]	-	R4577454	R4577455
23-122703-002[186]	2-7/8 "	60050145X	60050145X[37]	60050146	69270702[41]	R4111995[53]	-	R4577454	R4577455
23-122691-002[188]	2-7/8 "	60050145X	60050145X[37]	60050146	69270702[41]	R4111995[53]	-	R4577454	R4577455
23-122743-002[187]	2-7/8 "	60050145X	60050145X[37]	60050146	69270702[41]	R4111995[53]	-	R4577454	R4577455
N/A	1-3/4 "	201179X	201180X	SP7873S	SP7880S[204]	-	-	R4577870	R4577870
N/A	1-3/4 "	201183X	201184X[329]	SP7873S	NR	-	-	R4577870	R4577870
23-122703-002[186]	2-7/8 "	60050145X	60050145X[37]	60050146	69270702[41]	R4111995[53]	-	R4577454	R4577455
23-122743-002[187]	2-7/8 "	60050145X	60050145X[37]	60050146	69270702[41]	R4111995[53]	-	R4577454	R4577455
23-122691-002[188]	2-7/8 "	60050145X	60050145X[37]	60050146	69270702[41]	R4111995[53]	-	R4577454	R4577455
23-122700-002[9]	2-1/2 "	R424244X	R424244X[37]	60050266	69270757[41]	R4111995[53]	-	R4577454	R4577455
N/A	1-3/4 "	201179X	201180X	SP7873S	SP7880S[204]	-	-	R4577870	R4577870
N/A	1-3/4 "	201183X	201184X[329]	SP7873S	NR	-	-	R4577870	R4577870
23-122700-002[9]	2-1/2 "	R424244X	R424244X[37]	60050266	69270757[41]	R4111995[53]	-	R4577454	R4577455
23-122691-002[188]	2-7/8 "	60050145X	60050145X[37]	60050146	69270702[41]	R4111995[53]	-	R4577454	R4577455
23-122743-002[187]	2-7/8 "	60050145X	60050145X[37]	60050146	69270702[41]	R4111995[53]	-	R4577454	R4577455
23-122703-002[186]	2-7/8 "	60050145X	60050145X[37]	60050146	69270702[41]	R4111995[53]	-	R4577454	R4577455
N/A	1-3/4 "	201183X	201184X[329]	SP7873S	NR	-	-	N/A	N/A
N/A	1-3/4 "	201179X	201180X	SP7873S	SP7880S[204]	-	-	N/A	N/A
23-122691-002[188]	2-7/8 "	60050145X	60050145X[37]	60050146	69270702[41]	R4111995[53]	-	R4577454	R4577455

204 - Right Hand; use E-4057 for Left Hand Expander Kits
329 - Forward
340 - Use 69160457 for Disc Pad Retainer Clip
341 - Use 69160445 for Disc Pad Retainer Clip
358 - Split System

MAKE MODEL YEAR AXLE CODE AXLE WEIGHT	AXLE & BRK. TYPE	BRK. MFG.	BRAKE SIZE	FMSI	MERITOR DISC PAD OR BRAKE SHOE	MERITOR GUIDE PIN OR RETURN SPRING KIT	MERITOR CALIPER HWD. KIT OR RETURN SPRING KIT	MERITOR ADJUSTER KIT (LEFT WHEEL)	MERITOR ADJUSTER KIT (RIGHT WHEEL)
FORD(Cont.)									
LNT800 SERIES: LOUISVILLE 94.4 BBC SHORT CONVENTIONAL CHASSIS CAB, TANDEM AXLE(Cont.)									
1988									
	Fd	DN		7141 - D224	MD224[340]	69310693	60050153	NR	NR
	Fd	DN		7149 - D236	MD236[341]	69310693	69310782[43]	NR	NR
	Fd	DN		7149 - D236	MD236[341]	69310693	69310782[43]	NR	NR
	Ra	LG	15 " x 7 "	4505A - 544	N/A	R40H618	NR	NR	NR
	Ra	LG	15 " x 7 "	4505A - 544	N/A	R40H618	NR	SP7887S	SP7887S
1987									
	Fd	DN		7141 - D224	MD224[340]	69310693	60050153	NR	NR
	Fd	DN		7149 - D236	MD236[341]	69310693	69310782[43]	NR	NR
	Fd	DN		7149 - D236	MD236[341]	69310693	69310782[43]	NR	NR
	Fd	DN		7149 - D236	MD236[341]	69310693	69310782[43]	NR	NR
	Ra	LG	15 " x 7 "	4505A - 544	N/A	R40H618	NR	SP7887S	SP7887S
	Ra	LG	15 " x 7 "	4505A - 544	N/A	R40H618	NR	NR	NR
1986									
	Fd	DN		7149 - D236	MD236[341]	69310693	69310782	NR	NR
	Fd	DN		7141 - D224	MD224[340]	69310693	60050153	NR	NR
	Fd	DN		7149 - D236	MD236[341]	69310693	69310782	NR	NR
	Fd	DN		7149 - D236	MD236[341]	69310693	69310782	NR	NR
	Ra	LG	15 " x 7 "	4505A - 544	N/A	R40H618	NR	SP7887S	SP7887S
	Ra	LG	15 " x 7 "	4505A - 544	N/A	R40H618	NR	NR	NR
1985									
	Fd	DN		7141 - D224	MD224[340]	69310693	60050153	NR	NR
	Fd	DN		7149 - D236	MD236[341]	69310693	R40H5523	NR	NR
	Fd	DN		7149 - D236	MD236[341]	69310693	R40H5523	NR	NR
	Fd	DN		7149 - D236	MD236[341]	69310693	R40H5523	NR	NR
	Ra	LG	15 " x 7 "	4505A - 544	N/A	R40H618	NR	NR	NR
	Ra	LG	15 " x 7 "	4505A - 544	N/A	R40H618	NR	SP7887S	SP7887S
1984									
	Fd	DN		7141 - D224	MD224[340]	69310693	60050153	NR	NR
	Fd	DN		7149 - D236	MD236[341]	69310693	R40H5523	NR	NR
	Fd	DN		7149 - D236	MD236[341]	69310693	R40H5523	NR	NR
	Fd	DN		7149 - D236	MD236[341]	69310693	R40H5523	NR	NR
	Ra	LG	15 " x 7 "	4505A - 544	N/A	R40H618	NR	NR	NR
	Ra	LG	15 " x 7 "	4505A - 544	N/A	R40H618	NR	SP7887S	SP7887S
1983									
	Ra	LG	15 " x 6 "	4504A - 543	N/A	R40H618	NR	SP7888S	SP7888S
	Ra	LG	15 " x 6 "	4504A - 543	N/A	R40H618	NR	NR	NR
	Ra	LG	15 " x 7 "	4505A - 544	N/A	R40H618	NR	NR	NR
	Ra	LG	15 " x 7 "	4505A - 544	N/A	R40H618	NR	SP7888S	SP7888S
F050, F055, F060	Fa	KH	14 " x 2-1/2 "	2060 - 361	Discontinued	R40H596	R40H9219	R40H3536	R40H3537
F070	Fa	WG	15 " x 3 "	1245C - 321	R700321	R40H521	R40H9237	R40H3502	R40H3503
	Fa	WG	15 " x 3 "	1245C - 321	R700321	R40H521	R40H9237	R40H3502	R40H3503
	Fa	WG	15 " x 3 "	1245C - 321	R700321	R40H521	R40H9237	R40H3502	R40H3503
	Fa	WG	15 " x 3 "	1245C - 321	R700321	R40H521	R40H9237	R40H3502	R40H3503
	Fd	DN		7141 - D224	MD224[340]	69310693	60050153	NR	NR
F080, F090	Fd	DN		7149 - D236	MD236[341]	69310693	R40H5523	NR	NR
	Fd	DN		7149 - D236	MD236[341]	69310693	R40H5523	NR	NR
F090, F120	Fa	WG	15 " x 3 "	1245C - 321	R700321	R40H521	R40H9237	R40H3502	R40H3503
	Fa	WG	15 " x 3 "	1245C - 321	R700321	R40H521	R40H9237	R40H3502	R40H3503
R170, R175	Ra	KH	15 " x 5 "	4646 - 400	R700400	R40H595	R40H9220	R40H3538	R40H3539
	Ra	WG	15 " x 5 "	1252 - 346	R700346	R40H597	R40H9200	R40H3540	R40H3541
R185	Ra	WG	15 " x 6 "	4596 - 381	R700381	R40H597	R40H9200	R40H3540	R40H3541
	Ra	WG	15 " x 7 "	4597 - 383	R700383	R40H597	R40H9200	R40H3540	R40H3541
1982									
	Ra	LG	15 " x 6 "	4504A - 543	N/A	R40H618	NR	NR	NR
	Ra	LG	15 " x 6 "	4504A - 543	N/A	R40H618	NR	SP7888S	SP7888S
	Ra	LG	15 " x 7 "	4505A - 544	N/A	R40H618	NR	SP7888S	SP7888S
	Ra	LG	15 " x 7 "	4505A - 544	N/A	R40H618	NR	NR	NR
F050, F055, F060	Fa	KH	14 " x 2-1/2 "	2060 - 361	Discontinued	R40H596	R40H9219	R40H3536	R40H3537
F070	Fa	WG	15 " x 3 "	1245C - 321	R700321	R40H521	R40H9237	R40H3502	R40H3503
	Fa	WG	15 " x 3 "	1245C - 321	R700321	R40H521	R40H9237	R40H3502	R40H3503
	Fa	WG	15 " x 3 "	1245C - 321	R700321	R40H521	R40H9237	R40H3502	R40H3503
	Fa	WG	15 " x 3 "	1245C - 321	R700321	R40H521	R40H9237	R40H3502	R40H3503
	Fd	DN		7141 - D224	MD224[340]	69310693	60050153	NR	NR

9 - 6 Stud, Dayton Rotor, Hat Style
43 - For Applications Taking A Longer Shim, Use R404151706
187 - 6 Stud, 6.443" Hub
37 - Also available as a New unit
53 - Power Brakes
188 - 6 Stud, 9.251" Hub
41 - Aluminum piston
186 - 10 Stud
204 - Right Hand; use E-4057 for Left Hand Expander Kits

MERITOR DRUM OR ROTOR NO.	CALIPER OR CYLINDER BORE SIZE	MERITOR CALIPER OR WHEEL CYLINDER (LEFT)	MERITOR CALIPER OR WHEEL CYLINDER (RIGHT)	MERITOR CALIPER OR WHEEL CYLINDER REPAIR KIT	MERITOR CALIPER PISTON	MERITOR MASTER CYLINDER	MERITOR MASTER CYLINDER KIT	MERITOR BRAKE HOSE (LEFT)	MERITOR BRAKE HOSE (RIGHT)
									FORD(Cont.)
LNT800 SERIES: LOUISVILLE 94.4 BBC SHORT CONVENTIONAL CHASSIS CAB, TANDEM AXLE(Cont.)									
23-122700-002[9]	2-1/2 "	R424244X	R424244X[37]	60050266	69270757[41]	R4111995[53]	-	R4577454	R4577455
23-122703-002[186]	2-7/8 "	60050145X	60050145X[37]	60050146	69270702[41]	R4111995[53]	-	R4577454	R4577455
23-122743-002[187]	2-7/8 "	60050145X	60050145X[37]	60050146	69270702[41]	R4111995[53]	-	R4577454	R4577455
N/A	1-3/4 "	201179X	201180X	SP7873S	SP7880S[204]	-	-	N/A	N/A
N/A	1-3/4 "	201183X	201184X[329]	SP7873S	NR	-	-	N/A	N/A
23-122700-002[9]	2-1/2 "	R424244X	R424244X[37]	60050266	69270757[41]	R4111995[53]	-	R4577454	R4577455
23-122691-002[188]	2-7/8 "	60050145X	60050145X[37]	60050146	69270702[41]	R4111995[53]	-	R4577454	R4577455
23-122703-002[186]	2-7/8 "	60050145X	60050145X[37]	60050146	69270702[41]	R4111995[53]	-	R4577454	R4577455
23-122743-002[187]	2-7/8 "	60050145X	60050145X[37]	60050146	69270702[41]	R4111995[53]	-	R4577454	R4577455
N/A	1-3/4 "	201183X	201184X[329]	SP7873S	NR	-	-	N/A	N/A
N/A	1-3/4 "	201179X	201180X	SP7873S	SP7880S[204]	-	-	N/A	N/A
23-122703-002[186]	2-7/8 "	60050145X	60050145X[37]	60050146	69270702[41]	R4111995[53]	-	R4577454	R4577455
23-122700-002[9]	2-1/2 "	R424244X	R424244X[37]	60050266	69270757[41]	R4111995[53]	-	R4577454	R4577455
23-122691-002[188]	2-7/8 "	60050145X	60050145X[37]	60050146	69270702[41]	R4111995[53]	-	R4577454	R4577455
23-122743-002[187]	2-7/8 "	60050145X	60050145X[37]	60050146	69270702[41]	R4111995[53]	-	R4577454	R4577455
N/A	1-3/4 "	201183X	201184X[329]	SP7873S	NR	-	-	N/A	N/A
N/A	1-3/4 "	201179X	201180X	SP7873S	SP7880S[204]	-	-	N/A	N/A
23-122700-002[9]	2-1/2 "	R424244X	R424244X[37]	60050266	69270757[41]	R4111995[53]	-	R4577454	R4577455
23-122703-002[186]	2-7/8 "	60050145X	60050145X[37]	60050146	69270702[41]	R4111995[53]	-	R4577454	R4577455
23-122691-002[188]	2-7/8 "	60050145X	60050145X[37]	60050146	69270702[41]	R4111995[53]	-	R4577454	R4577455
23-122743-002[187]	2-7/8 "	60050145X	60050145X[37]	60050146	69270702[41]	R4111995[53]	-	R4577454	R4577455
N/A	1-3/4 "	201179X	201180X	SP7873S	SP7880S[204]	-	-	N/A	N/A
N/A	1-3/4 "	201183X	201184X[329]	SP7873S	NR	-	-	N/A	N/A
23-122700-002[9]	2-1/2 "	R424244X	R424244X[37]	60050266	69270757[41]	R4111995[53]	-	R4577454	R4577455
23-122691-002[188]	2-7/8 "	60050145X	60050145X[37]	60050146	69270702[41]	R4111995[53]	-	R4577454	R4577455
23-122743-002[187]	2-7/8 "	60050145X	60050145X[37]	60050146	69270702[41]	R4111995[53]	-	R4577454	R4577455
23-122703-002[186]	2-7/8 "	60050145X	60050145X[37]	60050146	69270702[41]	R4111995[53]	-	R4577454	R4577455
N/A	1-3/4 "	201179X	201180X	SP7873S	SP7880S[204]	-	-	N/A	N/A
N/A	1-3/4 "	201183X	201184X[329]	SP7873S	NR	-	-	N/A	N/A
N/A	1-5/8 "	201185	201186[329]	SP7895S	NR	-	-	R4577147	R4577147
N/A	1-5/8 "	201181	201182	SP7895S	NR	-	-	R4577147	R4577147
N/A	1-5/8 "	201181	201182	SP7895S	NR	-	-	R4577147	R4577147
N/A	1-5/8 "	201185	201186[329]	SP7895S	NR	-	-	R4577147	R4577147
N/A	1.09375	R4133484	R4133485	R4166819	NR	R4111629[53]	R4122484	R4577460	R4577460
N/A	1-1/8 "	R4133714	R4133715	R4166926	NR	R4111631[221]	R4122486	R4577452	R4577453
N/A	1-1/8 "	R4133719	R4133718	R4166926	NR	R4111634[53]	N/A	R4577452	R4577453
N/A	1-1/8 "	R4133714	R4133715	R4166926	NR	R4111995[53]	-	R4577454	R4577455
N/A	1-1/8 "	R4133716	R4133717	R4166926	NR	R4111772[53]	R4122488	R4577454	R4577455
23-122700-002[9]	2-1/2 "	R424244X	R424244X[37]	60050266	69270757[41]	R4111992[214]	R4122386	R4577452	R4577453
23-122691-002[188]	2-7/8 "	60050145X	60050145X[37]	60050146	69270702[41]	R4111992[214]	R4122386	R4577452	R4577453
23-122703-002[186]	2-7/8 "	60050145X	60050145X[37]	60050146	69270702[41]	R4111992[214]	R4122386	R4577452	R4577453
N/A	1-1/4 "	R4133581	R4133581	R4166923	NR	R4111992[214]	R4122386	R4577452	R4577453
N/A	1-1/4 "	R4133720	R4133721	R4166923	NR	R4111630[222]	N/A	R4577452	R4577453
N/A	1-1/2 "	R4033607	R4033607	R4166818	NR	-	-	R4577147	R4577147
N/A	1-5/8 "	R4133338	R4133338	R4166689	NR	-	-	R4577147	R4577147
N/A	1-5/8 "	R4133338	R4133338	R4166689	NR	-	-	R4577147	R4577147
N/A	1-3/4 "	R4133400	R4133400	R4166917	NR	-	-	R4577147	R4577147
N/A	1-5/8 "	201181	201182	SP7895S	NR	-	-	R4577147	R4577147
N/A	1-5/8 "	201185	201186[329]	SP7895S	NR	-	-	R4577147	R4577147
N/A	1-5/8 "	201185	201186[329]	SP7895S	NR	-	-	R4577147	R4577147
N/A	1-5/8 "	201181	201182	SP7895S	NR	-	-	R4577147	R4577147
N/A	1.09375	R4133484	R4133485	R4166819	NR	R4111629[53]	R4122484	R4577460	R4577460
N/A	1-1/8 "	R4133719	R4133718	R4166926	NR	R4111634[53]	N/A	R4577452	R4577453
N/A	1-1/8 "	R4133714	R4133715	R4166926	NR	R4111995[53]	-	R4577454	R4577455
N/A	1-1/8 "	R4133714	R4133715	R4166926	NR	R4111631[221]	R4122486	R4577452	R4577453
N/A	1-1/8 "	R4133716	R4133717	R4166926	NR	R4111772[53]	R4122488	R4577454	R4577455
23-122700-002[9]	2-1/2 "	R424244X	R424244X[37]	60050266	69270757[41]	R4111992[214]	R4122386	R4577452	R4577453

214 - Power Brakes, Split System
329 - Forward
221 - Power Brakes, 17,500 or 18,500 lb. Rear Axle
340 - Use 69160457 for Disc Pad Retainer Clip
222 - Power Brakes, 18,500 or 22,000 lb. Rear Axle
341 - Use 69160445 for Disc Pad Retainer Clip

MAKE MODEL YEAR AXLE CODE AXLE WEIGHT	AXLE & BRK. TYPE	BRK. MFG.	BRAKE SIZE	FMSI	MERITOR DISC PAD OR BRAKE SHOE	MERITOR GUIDE PIN OR RETURN SPRING KIT	MERITOR CALIPER HWD. KIT OR RETURN SPRING KIT	MERITOR ADJUSTER KIT (LEFT WHEEL)	MERITOR ADJUSTER KIT (RIGHT WHEEL)
FORD(Cont.)									
LNT800 SERIES: LOUISVILLE 94.4 BBC SHORT CONVENTIONAL CHASSIS CAB, TANDEM AXLE(Cont.)									
1982									
F080, F090	Fd	DN		7149 - D236	MD236[341]	69310693	R40H5523	NR	NR
	Fd	DN		7149 - D236	MD236[341]	69310693	R40H5523	NR	NR
F090, F120	Fa	WG	15 " x 3 "	1245C - 321	R700321	R40H521	R40H9237	R40H3502	R40H3503
	Fa	WG	15 " x 3 "	1245C - 321	R700321	R40H521	R40H9237	R40H3502	R40H3503
R170, R175	Ra	KH	15 " x 5 "	4646 - 400	R700400	R40H595	R40H9220	R40H3538	R40H3539
	Ra	WG	15 " x 5 "	1252 - 346	R700346	R40H597	R40H9200	R40H3540	R40H3541
R185	Ra	WG	15 " x 6 "	4596 - 381	R700381	R40H597	R40H9200	R40H3540	R40H3541
	Ra	WG	15 " x 7 "	4597 - 383	R700383	R40H597	R40H9200	R40H3540	R40H3541
1981									
	Ra	LG	15 " x 6 "	4504A - 543	N/A	R40H618	NR	NR	NR
	Ra	LG	15 " x 6 "	4504A - 543	N/A	R40H618	NR	SP7888S	SP7888S
	Ra	LG	15 " x 7 "	4505A - 544	N/A	R40H618	NR	NR	NR
	Ra	LG	15 " x 7 "	4505A - 544	N/A	R40H618	NR	SP7888S	SP7888S
F050, F055, F060	Fa	KH	14 " x 2-1/2 "	2060 - 361	Discontinued	R40H596	R40H9219	R40H3536	R40H3537
F070	Fa	WG	15 " x 3 "	1245C - 321	R700321	R40H521	R40H9237	R40H3502	R40H3503
	Fa	WG	15 " x 3 "	1245C - 321	R700321	R40H521	R40H9237	R40H3502	R40H3503
	Fa	WG	15 " x 3 "	1245C - 321	R700321	R40H521	R40H9237	R40H3502	R40H3503
	Fa	WG	15 " x 3 "	1245C - 321	R700321	R40H521	R40H9237	R40H3502	R40H3503
	Fd	DN		7141 - D224	MD224[340]	69310693	60050153	NR	NR
F080, F090	Fd	DN		7149 - D236	MD236[341]	69310693	R40H5523	NR	NR
	Fd	DN		7149 - D236	MD236[341]	69310693	R40H5523	NR	NR
F090, F120	Fa	WG	15 " x 3 "	1245C - 321	R700321	R40H521	R40H9237	R40H3502	R40H3503
	Fa	WG	15 " x 3 "	1245C - 321	R700321	R40H521	R40H9237	R40H3502	R40H3503
R170, R175	Ra	KH	15 " x 5 "	4646 - 400	R700400	R40H595	R40H9220	R40H3538	R40H3539
	Ra	WG	15 " x 5 "	1252 - 346	R700346	R40H597	R40H9200	R40H3540	R40H3541
R185	Ra	WG	15 " x 6 "	4596 - 381	R700381	R40H597	R40H9200	R40H3540	R40H3541
	Ra	WG	15 " x 7 "	4597 - 383	R700383	R40H597	R40H9200	R40H3540	R40H3541
1980									
	Ra	LG	15 " x 6 "	4504A - 543	N/A	R40H618	NR	SP7888S	SP7888S
	Ra	LG	15 " x 6 "	4504A - 543	N/A	R40H618	NR	NR	NR
	Ra	LG	15 " x 7 "	4505A - 544	N/A	R40H618	NR	SP7888S	SP7888S
	Ra	LG	15 " x 7 "	4505A - 544	N/A	R40H618	NR	NR	NR
F050, F055, F060	Fa	KH	14 " x 2-1/2 "	2060 - 361	Discontinued	R40H596	R40H9219	R40H3536	R40H3537
F070	Fa	WG	15 " x 3 "	1245C - 321	R700321	R40H521	R40H9237	R40H3502	R40H3503
	Fa	WG	15 " x 3 "	1245C - 321	R700321	R40H521	R40H9237	R40H3502	R40H3503
	Fa	WG	15 " x 3 "	1245C - 321	R700321	R40H521	R40H9237	R40H3502	R40H3503
	Fa	WG	15 " x 3 "	1245C - 321	R700321	R40H521	R40H9237	R40H3502	R40H3503
	Fd	DN		7141 - D224	MD224[340]	69310693	60050153	NR	NR
F080, F090	Fd	DN		7149 - D236	MD236[341]	69310693	R40H5523	NR	NR
	Fd	DN		7149 - D236	MD236[341]	69310693	R40H5523	NR	NR
F090, F120	Fa	WG	15 " x 3 "	1245C - 321	R700321	R40H521	R40H9237	R40H3502	R40H3503
	Fa	WG	15 " x 3 "	1245C - 321	R700321	R40H521	R40H9237	R40H3502	R40H3503
R170, R175	Ra	KH	15 " x 5 "	4646 - 400	R700400	R40H595	R40H9220	R40H3538	R40H3539
	Ra	WG	15 " x 5 "	1252 - 346	R700346	R40H597	R40H9200	R40H3540	R40H3541
R185	Ra	WG	15 " x 6 "	4596 - 381	R700381	R40H597	R40H9200	R40H3540	R40H3541
	Ra	WG	15 " x 7 "	4597 - 383	R700383	R40H597	R40H9200	R40H3540	R40H3541
1979									
	Ra	LG	15 " x 6 "	4504A - 543	N/A	R40H618	NR	SP7888S	SP7888S
	Ra	LG	15 " x 6 "	4504A - 543	N/A	R40H618	NR	NR	NR
	Ra	LG	15 " x 7 "	4505A - 544	N/A	R40H618	NR	NR	NR
	Ra	LG	15 " x 7 "	4505A - 544	N/A	R40H618	NR	SP7888S	SP7888S
F050, F055, F060	Fa	KH	14 " x 2-1/2 "	2060 - 361	Discontinued	R40H596	R40H9219	R40H3536	R40H3537
F070	Fa	WG	15 " x 3 "	1245C - 321	R700321	R40H521	R40H9237	R40H3502	R40H3503
	Fa	WG	15 " x 3 "	1245C - 321	R700321	R40H521	R40H9237	R40H3502	R40H3503
	Fa	WG	15 " x 3 "	1245C - 321	R700321	R40H521	R40H9237	R40H3502	R40H3503
	Fa	WG	15 " x 3 "	1245C - 321	R700321	R40H521	R40H9237	R40H3502	R40H3503
	Fd	DN		7141 - D224	MD224[340]	69310693	60050153	NR	NR
F080, F090	Fd	DN		7149 - D236	MD236[341]	69310693	R40H5523	NR	NR
	Fd	DN		7149 - D236	MD236[341]	69310693	R40H5523	NR	NR
F090, F120	Fa	WG	15 " x 3 "	1245C - 321	R700321	R40H521	R40H9237	R40H3502	R40H3503
	Fa	WG	15 " x 3 "	1245C - 321	R700321	R40H521	R40H9237	R40H3502	R40H3503
R170, R175	Ra	KH	15 " x 5 "	4646 - 400	R700400	R40H595	R40H9220	R40H3538	R40H3539
	Ra	WG	15 " x 5 "	1252 - 346	R700346	R40H597	R40H9200	R40H3540	R40H3541

9 - 6 Stud, Dayton Rotor, Hat Style
53 - Power Brakes
214 - Power Brakes, Split System
37 - Also available as a New unit
186 - 10 Stud
221 - Power Brakes, 17,500 or 18,500 lb. Rear Axle
41 - Aluminum piston
188 - 6 Stud, 9.251" Hub
222 - Power Brakes, 18,500 or 22,000 lb. Rear Axle

MERITOR DRUM OR ROTOR NO.	CALIPER OR CYLINDER BORE SIZE	MERITOR CALIPER OR WHEEL CYLINDER (LEFT)	MERITOR CALIPER OR WHEEL CYLINDER (RIGHT)	MERITOR CALIPER OR WHEEL CYLINDER REPAIR KIT	MERITOR CALIPER PISTON	MERITOR MASTER CYLINDER	MERITOR MASTER CYLINDER KIT	MERITOR BRAKE HOSE (LEFT)	MERITOR BRAKE HOSE (RIGHT)
									FORD(Cont.)
LNT800 SERIES: LOUISVILLE 94.4 BBC SHORT CONVENTIONAL CHASSIS CAB, TANDEM AXLE(Cont.)									
23-122703-002[186]	2-7/8 "	60050145X	60050145X[37]	60050146	69270702[41]	R4111992[214]	R4122386	R4577452	R4577453
23-122691-002[188]	2-7/8 "	60050145X	60050145X[37]	60050146	69270702[41]	R4111992[214]	R4122386	R4577452	R4577453
N/A	1-1/4 "	R4133581	R4133581	R4166923	NR	R4111992[214]	R4122386	R4577452	R4577453
N/A	1-1/4 "	R4133720	R4133721	R4166923	NR	R4111630[222]	N/A	R4577452	R4577453
N/A	1-1/2 "	R4033607	R4033607	R4166818	NR	-	-	R4577147	R4577147
N/A	1-5/8 "	R4133338	R4133338	R4166689	NR	-	-	R4577147	R4577147
N/A	1-5/8 "	R4133338	R4133338	R4166689	NR	-	-	R4577147	R4577147
N/A	1-3/4 "	R4133400	R4133400	R4166917	NR	-	-	R4577147	R4577147
N/A	1-5/8 "	201181	201182	SP7895S	NR	-	-	R4577147	R4577147
N/A	1-5/8 "	201185	201186[329]	SP7895S	NR	-	-	R4577147	R4577147
N/A	1-5/8 "	201181	201182	SP7895S	NR	-	-	R4577147	R4577147
N/A	1-5/8 "	201185	201186[329]	SP7895S	NR	-	-	R4577147	R4577147
N/A	1.09375	R4133484	R4133485	R4166819	NR	R4111629[53]	R4122484	R4577460	R4577460
N/A	1-1/8 "	R4133716	R4133717	R4166926	NR	R4111772[53]	R4122488	R4577454	R4577455
N/A	1-1/8 "	R4133714	R4133715	R4166926	NR	R4111995[53]	-	R4577454	R4577455
N/A	1-1/8 "	R4133719	R4133718	R4166926	NR	R4111634[53]	N/A	R4577452	R4577453
N/A	1-1/8 "	R4133714	R4133715	R4166926	NR	R4111631[221]	R4122486	R4577452	R4577453
23-122700-002[9]	2-1/2 "	R424244X	R424244X[37]	60050266	69270757[41]	R4111992[214]	R4122386	R4577452	R4577453
23-122691-002[188]	2-7/8 "	60050145X	60050145X[37]	60050146	69270702[41]	R4111992[214]	R4122386	R4577452	R4577453
23-122703-002[186]	2-7/8 "	60050145X	60050145X[37]	60050146	69270702[41]	R4111992[214]	R4122386	R4577452	R4577453
N/A	1-1/4 "	R4133720	R4133721	R4166923	NR	R4111630[222]	N/A	R4577452	R4577453
N/A	1-1/4 "	R4133581	R4133581	R4166923	NR	R4111992[214]	R4122386	R4577452	R4577453
N/A	1-1/2 "	R4033607	R4033607	R4166818	NR	-	-	R4577147	R4577147
N/A	1-5/8 "	R4133338	R4133338	R4166689	NR	-	-	R4577147	R4577147
N/A	1-5/8 "	R4133338	R4133338	R4166689	NR	-	-	R4577147	R4577147
N/A	1-3/4 "	R4133400	R4133400	R4166917	NR	-	-	R4577147	R4577147
N/A	1-5/8 "	201185	201186[329]	SP7895S	NR	-	-	R4577147	R4577147
N/A	1-5/8 "	201181	201182	SP7895S	NR	-	-	R4577147	R4577147
N/A	1-5/8 "	201185	201186[329]	SP7895S	NR	-	-	R4577147	R4577147
N/A	1-5/8 "	201181	201182	SP7895S	NR	-	-	R4577147	R4577147
N/A	1.09375	R4133484	R4133485	R4166819	NR	R4111629[53]	R4122484	R4577460	R4577460
N/A	1-1/8 "	R4133714	R4133715	R4166926	NR	R4111995[53]	-	R4577454	R4577455
N/A	1-1/8 "	R4133719	R4133718	R4166926	NR	R4111634[53]	N/A	R4577452	R4577453
N/A	1-1/8 "	R4133714	R4133715	R4166926	NR	R4111631[221]	R4122486	R4577452	R4577453
N/A	1-1/8 "	R4133716	R4133717	R4166926	NR	R4111772[53]	R4122488	R4577454	R4577455
23-122700-002[9]	2-1/2 "	R424244X	R424244X[37]	60050266	69270757[41]	R4111992[214]	R4122386	R4577452	R4577453
23-122703-002[186]	2-7/8 "	60050145X	60050145X[37]	60050146	69270702[41]	R4111992[214]	R4122386	R4577452	R4577453
23-122691-002[188]	2-7/8 "	60050145X	60050145X[37]	60050146	69270702[41]	R4111992[214]	R4122386	R4577452	R4577453
N/A	1-1/4 "	R4133720	R4133721	R4166923	NR	R4111630[222]	N/A	R4577452	R4577453
N/A	1-1/4 "	R4133581	R4133581	R4166923	NR	R4111992[214]	R4122386	R4577452	R4577453
N/A	1-1/2 "	R4033607	R4033607	R4166818	NR	-	-	R4577147	R4577147
N/A	1-5/8 "	R4133338	R4133338	R4166689	NR	-	-	R4577147	R4577147
N/A	1-5/8 "	R4133338	R4133338	R4166689	NR	-	-	R4577147	R4577147
N/A	1-3/4 "	R4133400	R4133400	R4166917	NR	-	-	R4577147	R4577147
N/A	1-5/8 "	201185	201186[329]	SP7895S	NR	-	-	R4577147	R4577147
N/A	1-5/8 "	201181	201182	SP7895S	NR	-	-	R4577147	R4577147
N/A	1-5/8 "	201181	201182	SP7895S	NR	-	-	R4577147	R4577147
N/A	1-5/8 "	201185	201186[329]	SP7895S	NR	-	-	R4577147	R4577147
N/A	1.09375	R4133484	R4133485	R4166819	NR	R4111629[53]	R4122484	R4577460	R4577460
N/A	1-1/8 "	R4133714	R4133715	R4166926	NR	R4111631[221]	R4122486	R4577452	R4577453
N/A	1-1/8 "	R4133719	R4133718	R4166926	NR	R4111634[53]	N/A	R4577452	R4577453
N/A	1-1/8 "	R4133714	R4133715	R4166926	NR	R4111995[53]	-	R4577454	R4577455
N/A	1-1/8 "	R4133716	R4133717	R4166926	NR	R4111772[53]	R4122488	R4577454	R4577455
23-122700-002[9]	2-1/2 "	R424244X	R424244X[37]	60050266	69270757[41]	R4111992[214]	R4122386	R4577452	R4577453
23-122703-002[186]	2-7/8 "	60050145X	60050145X[37]	60050146	69270702[41]	R4111992[214]	R4122386	R4577452	R4577453
23-122691-002[188]	2-7/8 "	60050145X	60050145X[37]	60050146	69270702[41]	R4111992[214]	R4122386	R4577452	R4577453
N/A	1-1/4 "	R4133720	R4133721	R4166923	NR	R4111630[222]	N/A	R4577452	R4577453
N/A	1-1/4 "	R4133581	R4133581	R4166923	NR	R4111992[214]	R4122386	R4577452	R4577453
N/A	1-1/2 "	R4033607	R4033607	R4166818	NR	-	-	R4577147	R4577147
N/A	1-5/8 "	R4133338	R4133338	R4166689	NR	-	-	R4577147	R4577147

329 - Forward

340 - Use 69160457 for Disc Pad Retainer Clip

341 - Use 69160445 for Disc Pad Retainer Clip

MAKE MODEL YEAR AXLE CODE AXLE WEIGHT	AXLE & BRK. TYPE	BRK. MFG.	BRAKE SIZE	FMSI	MERITOR DISC PAD OR BRAKE SHOE	MERITOR GUIDE PIN OR RETURN SPRING KIT	MERITOR CALIPER HWD. KIT OR RETURN SPRING KIT	MERITOR ADJUSTER KIT (LEFT WHEEL)	MERITOR ADJUSTER KIT (RIGHT WHEEL)
FORD(Cont.)									
LNT800 SERIES: LOUISVILLE 94.4 BBC SHORT CONVENTIONAL CHASSIS CAB, TANDEM AXLE(Cont.)									
1979									
R185	Ra	WG	15 " x 6 "	4596 - 381	R700381	R40H597	R40H9200	R40H3540	R40H3541
	Ra	WG	15 " x 7 "	4597 - 383	R700383	R40H597	R40H9200	R40H3540	R40H3541
1978									
	Ra	LG	15 " x 6 "	4504A - 543	N/A	R40H618	NR	SP7888S	SP7888S
	Ra	LG	15 " x 6 "	4504A - 543	N/A	R40H618	NR	NR	NR
	Ra	LG	15 " x 7 "	4505A - 544	N/A	R40H618	NR	SP7888S	SP7888S
	Ra	LG	15 " x 7 "	4505A - 544	N/A	R40H618	NR	NR	NR
F050, F055, F060	Fa	KH	14 " x 2-1/2 "	2060 - 361	Discontinued	R40H596	R40H9219	R40H3536	R40H3537
F070	Fa	WG	15 " x 3 "	1245C - 321	R700321	R40H521	R40H9237	R40H3502	R40H3503
	Fa	WG	15 " x 3 "	1245C - 321	R700321	R40H521	R40H9237	R40H3502	R40H3503
	Fa	WG	15 " x 3 "	1245C - 321	R700321	R40H521	R40H9237	R40H3502	R40H3503
	Fa	WG	15 " x 3 "	1245C - 321	R700321	R40H521	R40H9237	R40H3502	R40H3503
	Fd	DN		7141 - D224	MD224[340]	69310693	60050153	NR	NR
F080, F090	Fd	DN		7149 - D236	MD236[341]	69310693	R40H5523	NR	NR
	Fd	DN		7149 - D236	MD236[341]	69310693	R40H5523	NR	NR
F090, F120	Fa	WG	15 " x 3 "	1245C - 321	R700321	R40H521	R40H9237	R40H3502	R40H3503
	Fa	WG	15 " x 3 "	1245C - 321	R700321	R40H521	R40H9237	R40H3502	R40H3503
R170, R175	Ra	KH	15 " x 5 "	4646 - 400	R700400	R40H595	R40H9220	R40H3538	R40H3539
	Ra	WG	15 " x 5 "	1252 - 346	R700346	R40H597	R40H9200	R40H3540	R40H3541
R185	Ra	WG	15 " x 6 "	4596 - 381	R700381	R40H597	R40H9200	R40H3540	R40H3541
	Ra	WG	15 " x 7 "	4597 - 383	R700383	R40H597	R40H9200	R40H3540	R40H3541
1977									
	Ra	LG	15 " x 6 "	4504A - 543	N/A	R40H618	NR	NR	NR
	Ra	LG	15 " x 6 "	4504A - 543	N/A	R40H618	NR	SP7888S	SP7888S
	Ra	LG	15 " x 7 "	4505A - 544	N/A	R40H618	NR	NR	NR
	Ra	LG	15 " x 7 "	4505A - 544	N/A	R40H618	NR	SP7888S	SP7888S
F050, F055, F060	Fa	KH	14 " x 2-1/2 "	2060 - 361	Discontinued	R40H596	R40H9219	R40H3536	R40H3537
F070	Fa	WG	15 " x 3 "	1245C - 321	R700321	R40H521	R40H9237	R40H3502	R40H3503
	Fa	WG	15 " x 3 "	1245C - 321	R700321	R40H521	R40H9237	R40H3502	R40H3503
	Fa	WG	15 " x 3 "	1245C - 321	R700321	R40H521	R40H9237	R40H3502	R40H3503
	Fa	WG	15 " x 3 "	1245C - 321	R700321	R40H521	R40H9237	R40H3502	R40H3503
	Fd	DN		7141 - D224	MD224[340]	69310693	60050153	NR	NR
F080, F090	Fd	DN		7149 - D236	MD236[341]	69310693	R40H5523	NR	NR
	Fd	DN		7149 - D236	MD236[341]	69310693	R40H5523	NR	NR
F090, F120	Fa	WG	15 " x 3 "	1245C - 321	R700321	R40H521	R40H9237	R40H3502	R40H3503
	Fa	WG	15 " x 3 "	1245C - 321	R700321	R40H521	R40H9237	R40H3502	R40H3503
R170, R175	Ra	KH	15 " x 5 "	4646 - 400	R700400	R40H595	R40H9220	R40H3538	R40H3539
	Ra	WG	15 " x 5 "	1252 - 346	R700346	R40H597	R40H9200	R40H3540	R40H3541
R185	Ra	WG	15 " x 6 "	4596 - 381	R700381	R40H597	R40H9200	R40H3540	R40H3541
	Ra	WG	15 " x 7 "	4597 - 383	R700383	R40H597	R40H9200	R40H3540	R40H3541
1976									
	Ra	LG	15 " x 6 "	4504A - 543	N/A	R40H618	NR	SP7888S	SP7888S
	Ra	LG	15 " x 6 "	4504A - 543	N/A	R40H618	NR	NR	NR
	Ra	LG	15 " x 7 "	4505A - 544	N/A	R40H618	NR	SP7888S	SP7888S
	Ra	LG	15 " x 7 "	4505A - 544	N/A	R40H618	NR	NR	NR
F050, F055, F060	Fa	KH	14 " x 2-1/2 "	2060 - 361	Discontinued	R40H596	R40H9219	R40H3536	R40H3537
F070	Fa	WG	15 " x 3 "	1245C - 321	R700321	R40H521	R40H9237	R40H3502	R40H3503
	Fa	WG	15 " x 3 "	1245C - 321	R700321	R40H521	R40H9237	R40H3502	R40H3503
	Fa	WG	15 " x 3 "	1245C - 321	R700321	R40H521	R40H9237	R40H3502	R40H3503
	Fa	WG	15 " x 3 "	1245C - 321	R700321	R40H521	R40H9237	R40H3502	R40H3503
	Fd	DN		7141 - D224	MD224[340]	69310693	60050153	NR	NR
F080, F090	Fd	DN		7149 - D236	MD236[341]	69310693	R40H5523	NR	NR
	Fd	DN		7149 - D236	MD236[341]	69310693	R40H5523	NR	NR
F090, F120	Fa	WG	15 " x 3 "	1245C - 321	R700321	R40H521	R40H9237	R40H3502	R40H3503
	Fa	WG	15 " x 3 "	1245C - 321	R700321	R40H521	R40H9237	R40H3502	R40H3503
R170, R175	Ra	KH	15 " x 5 "	4646 - 400	R700400	R40H595	R40H9220	R40H3538	R40H3539
	Ra	WG	15 " x 5 "	1252 - 346	R700346	R40H597	R40H9200	R40H3540	R40H3541
R185	Ra	WG	15 " x 6 "	4596 - 381	R700381	R40H597	R40H9200	R40H3540	R40H3541
	Ra	WG	15 " x 7 "	4597 - 383	R700383	R40H597	R40H9200	R40H3540	R40H3541
1975									
	Ra	LG	15 " x 6 "	4504A - 543	N/A	R40H618	NR	SP7888S	SP7888S
	Ra	LG	15 " x 6 "	4504A - 543	N/A	R40H618	NR	NR	NR
	Ra	LG	15 " x 7 "	4505A - 544	N/A	R40H618	NR	SP7888S	SP7888S

9 - 6 Stud, Dayton Rotor, Hat Style
53 - Power Brakes
214 - Power Brakes, Split System

37 - Also available as a New unit
186 - 10 Stud
221 - Power Brakes, 17,500 or 18,500 lb. Rear Axle

41 - Aluminum piston
188 - 6 Stud, 9.251" Hub
222 - Power Brakes, 18,500 or 22,000 lb. Rear Axle

MERITOR DRUM OR ROTOR NO.	CALIPER OR CYLINDER BORE SIZE	MERITOR CALIPER OR WHEEL CYLINDER (LEFT)	MERITOR CALIPER OR WHEEL CYLINDER (RIGHT)	MERITOR CALIPER OR WHEEL CYLINDER REPAIR KIT	MERITOR CALIPER PISTON	MERITOR MASTER CYLINDER	MERITOR MASTER CYLINDER KIT	MERITOR BRAKE HOSE (LEFT)	MERITOR BRAKE HOSE (RIGHT)
									FORD(Cont.)
LNT800 SERIES: LOUISVILLE 94.4 BBC SHORT CONVENTIONAL CHASSIS CAB, TANDEM AXLE(Cont.)									
N/A	1-5/8 "	R4133338	R4133338	R4166689	NR	-	-	R4577147	R4577147
N/A	1-3/4 "	R4133400	R4133400	R4166917	NR	-	-	R4577147	R4577147
N/A	1-5/8 "	201185	201186[329]	SP7895S	NR	-	-	R4577147	R4577147
N/A	1-5/8 "	201181	201182	SP7895S	NR	-	-	R4577147	R4577147
N/A	1-5/8 "	201185	201186[329]	SP7895S	NR	-	-	R4577147	R4577147
N/A	1-5/8 "	201181	201182	SP7895S	NR	-	-	R4577147	R4577147
N/A	1.09375	R4133484	R4133485	R4166819	NR	R4111629[53]	R4122484	R4577460	R4577460
N/A	1-1/8 "	R4133714	R4133715	R4166926	NR	R4111631[221]	R4122486	R4577452	R4577453
N/A	1-1/8 "	R4133716	R4133717	R4166926	NR	R4111772[53]	R4122488	R4577454	R4577455
N/A	1-1/8 "	R4133719	R4133718	R4166926	NR	R4111634[53]	N/A	R4577452	R4577453
N/A	1-1/8 "	R4133714	R4133715	R4166926	NR	R4111995[53]	-	R4577454	R4577455
23-122700-002[9]	2-1/2 "	R424244X	R424244X[37]	60050266	69270757[41]	R4111992[214]	R4122386	R4577452	R4577453
23-122703-002[186]	2-7/8 "	60050145X	60050145X[37]	60050146	69270702[41]	R4111992[214]	R4122386	R4577452	R4577453
23-122691-002[188]	2-7/8 "	60050145X	60050145X[37]	60050146	69270702[41]	R4111992[214]	R4122386	R4577452	R4577453
N/A	1-1/4 "	R4133581	R4133581	R4166923	NR	R4111992[214]	R4122386	R4577452	R4577453
N/A	1-1/4 "	R4133720	R4133721	R4166923	NR	R4111630[222]	N/A	R4577452	R4577453
N/A	1-1/2 "	R4033607	R4033607	R4166818	NR	-	-	R4577147	R4577147
N/A	1-5/8 "	R4133338	R4133338	R4166689	NR	-	-	R4577147	R4577147
N/A	1-5/8 "	R4133338	R4133338	R4166689	NR	-	-	R4577147	R4577147
N/A	1-3/4 "	R4133400	R4133400	R4166917	NR	-	-	R4577147	R4577147
N/A	1-5/8 "	201181	201182	SP7895S	NR	-	-	R4577147	R4577147
N/A	1-5/8 "	201185	201186[329]	SP7895S	NR	-	-	R4577147	R4577147
N/A	1-5/8 "	201181	201182	SP7895S	NR	-	-	R4577147	R4577147
N/A	1-5/8 "	201185	201186[329]	SP7895S	NR	-	-	R4577147	R4577147
N/A	1.09375	R4133484	R4133485	R4166819	NR	R4111629[53]	R4122484	R4577460	R4577460
N/A	1-1/8 "	R4133716	R4133717	R4166926	NR	R4111772[53]	R4122488	R4577454	R4577455
N/A	1-1/8 "	R4133714	R4133715	R4166926	NR	R4111995[53]	-	R4577454	R4577455
N/A	1-1/8 "	R4133714	R4133715	R4166926	NR	R4111631[221]	R4122486	R4577452	R4577453
N/A	1-1/8 "	R4133719	R4133718	R4166926	NR	R4111634[53]	N/A	R4577452	R4577453
23-122700-002[9]	2-1/2 "	R424244X	R424244X[37]	60050266	69270757[41]	R4111992[214]	R4122386	R4577452	R4577453
23-122691-002[188]	2-7/8 "	60050145X	60050145X[37]	60050146	69270702[41]	R4111992[214]	R4122386	R4577452	R4577453
23-122703-002[186]	2-7/8 "	60050145X	60050145X[37]	60050146	69270702[41]	R4111992[214]	R4122386	R4577452	R4577453
N/A	1-1/4 "	R4133720	R4133721	R4166923	NR	R4111630[222]	N/A	R4577452	R4577453
N/A	1-1/4 "	R4133581	R4133581	R4166923	NR	R4111992[214]	R4122386	R4577452	R4577453
N/A	1-1/2 "	R4033607	R4033607	R4166818	NR	-	-	R4577147	R4577147
N/A	1-5/8 "	R4133338	R4133338	R4166689	NR	-	-	R4577147	R4577147
N/A	1-5/8 "	R4133338	R4133338	R4166689	NR	-	-	R4577147	R4577147
N/A	1-3/4 "	R4133400	R4133400	R4166917	NR	-	-	R4577147	R4577147
N/A	1-5/8 "	201185	201186[329]	SP7895S	NR	-	-	R4577147	R4577147
N/A	1-5/8 "	201181	201182	SP7895S	NR	-	-	R4577147	R4577147
N/A	1-5/8 "	201185	201186[329]	SP7895S	NR	-	-	R4577147	R4577147
N/A	1-5/8 "	201181	201182	SP7895S	NR	-	-	R4577147	R4577147
N/A	1.09375	R4133484	R4133485	R4166819	NR	R4111629[53]	R4122484	R4577460	R4577460
N/A	1-1/8 "	R4133714	R4133715	R4166926	NR	R4111995[53]	-	R4577454	R4577455
N/A	1-1/8 "	R4133716	R4133717	R4166926	NR	R4111772[53]	R4122488	R4577454	R4577455
N/A	1-1/8 "	R4133719	R4133718	R4166926	NR	R4111634[53]	N/A	R4577452	R4577453
N/A	1-1/8 "	R4133714	R4133715	R4166926	NR	R4111631[221]	R4122486	R4577452	R4577453
23-122700-002[9]	2-1/2 "	R424244X	R424244X[37]	60050266	69270757[41]	R4111992[214]	R4122386	R4577452	R4577453
23-122703-002[186]	2-7/8 "	60050145X	60050145X[37]	60050146	69270702[41]	R4111992[214]	R4122386	R4577452	R4577453
23-122691-002[188]	2-7/8 "	60050145X	60050145X[37]	60050146	69270702[41]	R4111992[214]	R4122386	R4577452	R4577453
N/A	1-1/4 "	R4133581	R4133581	R4166923	NR	R4111992[214]	R4122386	R4577452	R4577453
N/A	1-1/4 "	R4133720	R4133721	R4166923	NR	R4111630[222]	N/A	R4577452	R4577453
N/A	1-1/2 "	R4033607	R4033607	R4166818	NR	-	-	R4577147	R4577147
N/A	1-5/8 "	R4133338	R4133338	R4166689	NR	-	-	R4577147	R4577147
N/A	1-5/8 "	R4133338	R4133338	R4166689	NR	-	-	R4577147	R4577147
N/A	1-3/4 "	R4133400	R4133400	R4166917	NR	-	-	R4577147	R4577147
N/A	1-5/8 "	201185	201186[329]	SP7895S	NR	-	-	R4577147	R4577147
N/A	1-5/8 "	201181	201182	SP7895S	NR	-	-	R4577147	R4577147
N/A	1-5/8 "	201185	201186[329]	SP7895S	NR	-	-	R4577147	R4577147

329 - Forward

340 - Use 69160457 for Disc Pad Retainer Clip

341 - Use 69160445 for Disc Pad Retainer Clip

MAKE MODEL YEAR AXLE CODE AXLE WEIGHT	AXLE & BRK. TYPE	BRK. MFG.	BRAKE SIZE	FMSI	MERITOR DISC PAD OR BRAKE SHOE	MERITOR GUIDE PIN OR RETURN SPRING KIT	MERITOR CALIPER HWD. KIT OR RETURN SPRING KIT	MERITOR ADJUSTER KIT (LEFT WHEEL)	MERITOR ADJUSTER KIT (RIGHT WHEEL)
FORD(Cont.)									
LNT800 SERIES: LOUISVILLE 94.4 BBC SHORT CONVENTIONAL CHASSIS CAB, TANDEM AXLE(Cont.)									
1975									
	Ra	LG	15 " x 7 "	4505A - 544	N/A	R40H618	NR	NR	NR
F050, F055, F060	Fa	KH	14 " x 2-1/2 "	2060 - 361	Discontinued	R40H596	R40H9219	R40H3536	R40H3537
F070	Fa	WG	15 " x 3 "	1245C - 321	R700321	R40H521	R40H9237	R40H3502	R40H3503
	Fa	WG	15 " x 3 "	1245C - 321	R700321	R40H521	R40H9237	R40H3502	R40H3503
	Fa	WG	15 " x 3 "	1245C - 321	R700321	R40H521	R40H9237	R40H3502	R40H3503
	Fa	WG	15 " x 3 "	1245C - 321	R700321	R40H521	R40H9237	R40H3502	R40H3503
	Fd	DN		7141 - D224	MD224[340]	69310693	60050153	NR	NR
F080, F090	Fd	DN		7149 - D236	MD236[341]	69310693	R40H5523	NR	NR
	Fd	DN		7149 - D236	MD236[341]	69310693	R40H5523	NR	NR
F090, F120	Fa	WG	15 " x 3 "	1245C - 321	R700321	R40H521	R40H9237	R40H3502	R40H3503
	Fa	WG	15 " x 3 "	1245C - 321	R700321	R40H521	R40H9237	R40H3502	R40H3503
R170, R175	Ra	KH	15 " x 5 "	4646 - 400	R700400	R40H595	R40H9220	R40H3538	R40H3539
	Ra	WG	15 " x 5 "	1252 - 346	R700346	R40H597	R40H9200	R40H3540	R40H3541
R185	Ra	WG	15 " x 6 "	4596 - 381	R700381	R40H597	R40H9200	R40H3540	R40H3541
	Ra	WG	15 " x 7 "	4597 - 383	R700383	R40H597	R40H9200	R40H3540	R40H3541
1974									
	Ra	LG	15 " x 6 "	4504A - 543	N/A	R40H618	NR	NR	NR
	Ra	LG	15 " x 6 "	4504A - 543	N/A	R40H618	NR	SP7888S	SP7888S
	Ra	LG	15 " x 7 "	4505A - 544	N/A	R40H618	NR	NR	NR
	Ra	LG	15 " x 7 "	4505A - 544	N/A	R40H618	NR	SP7888S	SP7888S
F050, F055, F060	Fa	KH	14 " x 2-1/2 "	2060 - 361	Discontinued	R40H596	R40H9219	R40H3536	R40H3537
F070	Fa	WG	15 " x 3 "	1245C - 321	R700321	R40H521	R40H9237	R40H3502	R40H3503
	Fa	WG	15 " x 3 "	1245C - 321	R700321	R40H521	R40H9237	R40H3502	R40H3503
	Fa	WG	15 " x 3 "	1245C - 321	R700321	R40H521	R40H9237	R40H3502	R40H3503
	Fa	WG	15 " x 3 "	1245C - 321	R700321	R40H521	R40H9237	R40H3502	R40H3503
	Fd	DN		7141 - D224	MD224[340]	69310693	60050153	NR	NR
F080, F090	Fd	DN		7149 - D236	MD236[341]	69310693	R40H5523	NR	NR
	Fd	DN		7149 - D236	MD236[341]	69310693	R40H5523	NR	NR
F090, F120	Fa	WG	15 " x 3 "	1245C - 321	R700321	R40H521	R40H9237	R40H3502	R40H3503
	Fa	WG	15 " x 3 "	1245C - 321	R700321	R40H521	R40H9237	R40H3502	R40H3503
R170, R175	Ra	KH	15 " x 5 "	4646 - 400	R700400	R40H595	R40H9220	R40H3538	R40H3539
	Ra	WG	15 " x 5 "	1252 - 346	R700346	R40H597	R40H9200	R40H3540	R40H3541
R185	Ra	WG	15 " x 6 "	4596 - 381	R700381	R40H597	R40H9200	R40H3540	R40H3541
	Ra	WG	15 " x 7 "	4597 - 383	R700383	R40H597	R40H9200	R40H3540	R40H3541
1973									
	Ra	LG	15 " x 6 "	4504A - 543	N/A	R40H618	NR	SP7888S	SP7888S
	Ra	LG	15 " x 6 "	4504A - 543	N/A	R40H618	NR	NR	NR
	Ra	LG	15 " x 7 "	4505A - 544	N/A	R40H618	NR	SP7888S	SP7888S
	Ra	LG	15 " x 7 "	4505A - 544	N/A	R40H618	NR	NR	NR
F050, F055, F060	Fa	KH	14 " x 2-1/2 "	2060 - 361	Discontinued	R40H596	R40H9219	R40H3536	R40H3537
F070	Fa	WG	15 " x 3 "	1245C - 321	R700321	R40H521	R40H9237	R40H3502	R40H3503
	Fa	WG	15 " x 3 "	1245C - 321	R700321	R40H521	R40H9237	R40H3502	R40H3503
	Fa	WG	15 " x 3 "	1245C - 321	R700321	R40H521	R40H9237	R40H3502	R40H3503
	Fa	WG	15 " x 3 "	1245C - 321	R700321	R40H521	R40H9237	R40H3502	R40H3503
	Fd	DN		7141 - D224	MD224[340]	69310693	60050153	NR	NR
F080, F090	Fd	DN		7149 - D236	MD236[341]	69310693	R40H5523	NR	NR
	Fd	DN		7149 - D236	MD236[341]	69310693	R40H5523	NR	NR
F090, F120	Fa	WG	15 " x 3 "	1245C - 321	R700321	R40H521	R40H9237	R40H3502	R40H3503
	Fa	WG	15 " x 3 "	1245C - 321	R700321	R40H521	R40H9237	R40H3502	R40H3503
R170, R175	Ra	KH	15 " x 5 "	4646 - 400	R700400	R40H595	R40H9220	R40H3538	R40H3539
	Ra	WG	15 " x 5 "	1252 - 346	R700346	R40H597	R40H9200	R40H3540	R40H3541
R185	Ra	WG	15 " x 6 "	4596 - 381	R700381	R40H597	R40H9200	R40H3540	R40H3541
	Ra	WG	15 " x 7 "	4597 - 383	R700383	R40H597	R40H9200	R40H3540	R40H3541
LT800 SERIES: LOUISVILLE CONVENTIONAL 106.4 BBC TANDEM CHASSIS CAB TRUCK									
1992									
	Fd	DN		7149 - D236	MD236[341]	69310693	69310782	NR	NR
	Fd	DN		7149 - D236	MD236[341]	69310693	69310782	NR	NR
	Fd	DN		7149 - D236	MD236[341]	69310693	69310782	NR	NR
	Fd	DN		7141 - D224	MD224[340]	69310693	60050153	NR	NR
	Ra	LG	15 " x 7 "	4505A - 544	N/A	R40H618	NR	NR	NR
	Ra	LG	15 " x 7 "	4505A - 544	N/A	R40H618	NR	SP7887S	SP7887S
1991									
	Fd	DN		7149 - D236	MD236[341]	69310693	69310782	NR	NR

9 - 6 Stud, Dayton Rotor, Hat Style
53 - Power Brakes
188 - 6 Stud, 9.251" Hub

37 - Also available as a New unit
186 - 10 Stud
204 - Right Hand; use E-4057 for Left Hand Expander Kits

41 - Aluminum piston
187 - 6 Stud, 6.443" Hub
214 - Power Brakes, Split System

MERITOR DRUM OR ROTOR NO.	CALIPER OR CYLINDER BORE SIZE	MERITOR CALIPER OR WHEEL CYLINDER (LEFT)	MERITOR CALIPER OR WHEEL CYLINDER (RIGHT)	MERITOR CALIPER OR WHEEL CYLINDER REPAIR KIT	MERITOR CALIPER PISTON	MERITOR MASTER CYLINDER	MERITOR MASTER CYLINDER KIT	MERITOR BRAKE HOSE (LEFT)	MERITOR BRAKE HOSE (RIGHT)
									FORD(Cont.)
LNT800 SERIES: LOUISVILLE 94.4 BBC SHORT CONVENTIONAL CHASSIS CAB, TANDEM AXLE(Cont.)									
N/A	1-5/8 "	201181	201182	SP7895S	NR	-	-	R4577147	R4577147
N/A	1.09375	R4133484	R4133485	R4166819	NR	R4111629[53]	R4122484	R4577460	R4577460
N/A	1-1/8 "	R4133716	R4133717	R4166926	NR	R4111772[53]	R4122488	R4577454	R4577455
N/A	1-1/8 "	R4133714	R4133715	R4166926	NR	R4111995[53]	-	R4577454	R4577455
N/A	1-1/8 "	R4133719	R4133718	R4166926	NR	R4111634[53]	N/A	R4577452	R4577453
N/A	1-1/8 "	R4133714	R4133715	R4166926	NR	R4111631[221]	R4122486	R4577452	R4577453
23-122700-002[9]	2-1/2 "	R424244X	R424244X[37]	60050266	69270757[41]	R4111992[214]	R4122386	R4577452	R4577453
23-122703-002[186]	2-7/8 "	60050145X	60050145X[37]	60050146	69270702[41]	R4111992[214]	R4122386	R4577452	R4577453
23-122691-002[188]	2-7/8 "	60050145X	60050145X[37]	60050146	69270702[41]	R4111992[214]	R4122386	R4577452	R4577453
N/A	1-1/4 "	R4133581	R4133581	R4166923	NR	R4111992[214]	R4122386	R4577452	R4577453
N/A	1-1/4 "	R4133720	R4133721	R4166923	NR	R4111630[222]	N/A	R4577452	R4577453
N/A	1-1/2 "	R4033607	R4033607	R4166818	NR	-	-	R4577147	R4577147
N/A	1-5/8 "	R4133338	R4133338	R4166689	NR	-	-	R4577147	R4577147
N/A	1-5/8 "	R4133338	R4133338	R4166689	NR	-	-	R4577147	R4577147
N/A	1-3/4 "	R4133400	R4133400	R4166917	NR	-	-	R4577147	R4577147
N/A	1-5/8 "	201181	201182	SP7895S	NR	-	-	R4577147	R4577147
N/A	1-5/8 "	201185	201186[329]	SP7895S	NR	-	-	R4577147	R4577147
N/A	1-5/8 "	201181	201182	SP7895S	NR	-	-	R4577147	R4577147
N/A	1-5/8 "	201185	201186[329]	SP7895S	NR	-	-	R4577147	R4577147
N/A	1.09375	R4133484	R4133485	R4166819	NR	R4111629[53]	R4122484	R4577460	R4577460
N/A	1-1/8 "	R4133714	R4133715	R4166926	NR	R4111995[53]	-	R4577454	R4577455
N/A	1-1/8 "	R4133716	R4133717	R4166926	NR	R4111772[53]	R4122488	R4577454	R4577455
N/A	1-1/8 "	R4133719	R4133718	R4166926	NR	R4111634[53]	N/A	R4577452	R4577453
N/A	1-1/8 "	R4133714	R4133715	R4166926	NR	R4111631[221]	R4122486	R4577452	R4577453
23-122700-002[9]	2-1/2 "	R424244X	R424244X[37]	60050266	69270757[41]	R4111992[214]	R4122386	R4577452	R4577453
23-122691-002[188]	2-7/8 "	60050145X	60050145X[37]	60050146	69270702[41]	R4111992[214]	R4122386	R4577452	R4577453
23-122703-002[186]	2-7/8 "	60050145X	60050145X[37]	60050146	69270702[41]	R4111992[214]	R4122386	R4577452	R4577453
N/A	1-1/4 "	R4133581	R4133581	R4166923	NR	R4111992[214]	R4122386	R4577452	R4577453
N/A	1-1/4 "	R4133720	R4133721	R4166923	NR	R4111630[222]	N/A	R4577452	R4577453
N/A	1-1/2 "	R4033607	R4033607	R4166818	NR	-	-	R4577147	R4577147
N/A	1-5/8 "	R4133338	R4133338	R4166689	NR	-	-	R4577147	R4577147
N/A	1-5/8 "	R4133338	R4133338	R4166689	NR	-	-	R4577147	R4577147
N/A	1-3/4 "	R4133400	R4133400	R4166917	NR	-	-	R4577147	R4577147
N/A	1-5/8 "	201185	201186[329]	SP7895S	NR	-	-	R4577147	R4577147
N/A	1-5/8 "	201181	201182	SP7895S	NR	-	-	R4577147	R4577147
N/A	1-5/8 "	201185	201186[329]	SP7895S	NR	-	-	R4577147	R4577147
N/A	1-5/8 "	201181	201182	SP7895S	NR	-	-	R4577147	R4577147
N/A	1.09375	R4133484	R4133485	R4166819	NR	R4111629[53]	R4122484	R4577460	R4577460
N/A	1-1/8 "	R4133714	R4133715	R4166926	NR	R4111631[221]	R4122486	R4577452	R4577453
N/A	1-1/8 "	R4133714	R4133715	R4166926	NR	R4111995[53]	-	R4577454	R4577455
N/A	1-1/8 "	R4133716	R4133717	R4166926	NR	R4111772[53]	R4122488	R4577454	R4577455
N/A	1-1/8 "	R4133719	R4133718	R4166926	NR	R4111634[53]	N/A	R4577452	R4577453
23-122700-002[9]	2-1/2 "	R424244X	R424244X[37]	60050266	69270757[41]	R4111992[214]	R4122386	R4577452	R4577453
23-122691-002[188]	2-7/8 "	60050145X	60050145X[37]	60050146	69270702[41]	R4111992[214]	R4122386	R4577452	R4577453
23-122703-002[186]	2-7/8 "	60050145X	60050145X[37]	60050146	69270702[41]	R4111992[214]	R4122386	R4577452	R4577453
N/A	1-1/4 "	R4133581	R4133581	R4166923	NR	R4111992[214]	R4122386	R4577452	R4577453
N/A	1-1/4 "	R4133720	R4133721	R4166923	NR	R4111630[222]	N/A	R4577452	R4577453
N/A	1-1/2 "	R4033607	R4033607	R4166818	NR	-	-	R4577147	R4577147
N/A	1-5/8 "	R4133338	R4133338	R4166689	NR	-	-	R4577147	R4577147
N/A	1-5/8 "	R4133338	R4133338	R4166689	NR	-	-	R4577147	R4577147
N/A	1-3/4 "	R4133400	R4133400	R4166917	NR	-	-	R4577147	R4577147
LT800 SERIES: LOUISVILLE CONVENTIONAL 106.4 BBC TANDEM CHASSIS CAB TRUCK									
23-122691-002[188]	2-7/8 "	60050145X	60050145X[37]	60050146	69270702[41]	R4111995[53]	-	R4577454	R4577455
23-122703-002[186]	2-7/8 "	60050145X	60050145X[37]	60050146	69270702[41]	R4111995[53]	-	R4577454	R4577455
23-122743-002[187]	2-7/8 "	60050145X	60050145X[37]	60050146	69270702[41]	R4111995[53]	-	R4577454	R4577455
23-122700-002[9]	2-1/2 "	R424244X	R424244X[37]	60050266	69270757[41]	R4111995[53]	-	R4577454	R4577455
N/A	1-3/4 "	201179X	201180X	SP7873S	SP7880S[204]	-	-	R4577870	R4577870
N/A	1-3/4 "	201183X	201184X[329]	SP7873S	NR	-	-	R4577870	R4577870
23-122743-002[187]	2-7/8 "	60050145X	60050145X[37]	60050146	69270702[41]	R4111995[53]	-	R4577454	R4577455

221 - Power Brakes, 17,500 or 18,500 lb. Rear Axle
222 - Power Brakes, 18,500 or 22,000 lb. Rear Axle
329 - Forward
340 - Use 69160457 for Disc Pad Retainer Clip
341 - Use 69160445 for Disc Pad Retainer Clip

MAKE MODEL YEAR AXLE CODE AXLE WEIGHT	AXLE & BRK. TYPE	BRK. MFG.	BRAKE SIZE	FMSI	MERITOR DISC PAD OR BRAKE SHOE	MERITOR GUIDE PIN OR RETURN SPRING KIT	MERITOR CALIPER HWD. KIT OR RETURN SPRING KIT	MERITOR ADJUSTER KIT (LEFT WHEEL)	MERITOR ADJUSTER KIT (RIGHT WHEEL)
FORD(Cont.)									
LT800 SERIES: LOUISVILLE CONVENTIONAL 106.4 BBC TANDEM CHASSIS CAB TRUCK(Cont.)									
1991									
	Fd	DN		7141 - D224	MD224[340]	69310693	60050153	NR	NR
	Fd	DN		7149 - D236	MD236[341]	69310693	69310782	NR	NR
	Fd	DN		7149 - D236	MD236[341]	69310693	69310782	NR	NR
	Ra	LG	15 " x 7 "	4505A - 544	N/A	R40H618	NR	SP7887S	SP7887S
	Ra	LG	15 " x 7 "	4505A - 544	N/A	R40H618	NR	NR	NR
1990									
	Fd	DN		7141 - D224	MD224[340]	69310693	60050153	NR	NR
	Fd	DN		7149 - D236	MD236[341]	69310693	69310782	NR	NR
	Fd	DN		7149 - D236	MD236[341]	69310693	69310782	NR	NR
	Fd	DN		7149 - D236	MD236[341]	69310693	69310782	NR	NR
	Ra	LG	15 " x 7 "	4505A - 544	N/A	R40H618	NR	SP7887S	SP7887S
	Ra	LG	15 " x 7 "	4505A - 544	N/A	R40H618	NR	NR	NR
1989									
	Fd	DN		7141 - D224	MD224[340]	69310693	60050153	NR	NR
	Fd	DN		7149 - D236	MD236[341]	69310693	69310782[43]	NR	NR
	Fd	DN		7149 - D236	MD236[341]	69310693	69310782[43]	NR	NR
	Fd	DN		7149 - D236	MD236[341]	69310693	69310782[43]	NR	NR
	Ra	LG	15 " x 7 "	4505A - 544	N/A	R40H618	NR	SP7887S	SP7887S
	Ra	LG	15 " x 7 "	4505A - 544	N/A	R40H618	NR	NR	NR
1988									
	Fd	DN		7149 - D236	MD236[341]	69310693	69310782[43]	NR	NR
	Fd	DN		7141 - D224	MD224[340]	69310693	60050153	NR	NR
	Fd	DN		7149 - D236	MD236[341]	69310693	69310782[43]	NR	NR
	Fd	DN		7149 - D236	MD236[341]	69310693	69310782[43]	NR	NR
	Ra	LG	15 " x 7 "	4505A - 544	N/A	R40H618	NR	NR	NR
	Ra	LG	15 " x 7 "	4505A - 544	N/A	R40H618	NR	SP7887S	SP7887S
1987									
	Fd	DN		7149 - D236	MD236[341]	69310693	69310782[43]	NR	NR
	Fd	DN		7149 - D236	MD236[341]	69310693	69310782[43]	NR	NR
	Fd	DN		7149 - D236	MD236[341]	69310693	69310782[43]	NR	NR
	Fd	DN		7141 - D224	MD224[340]	69310693	60050153	NR	NR
	Ra	LG	15 " x 7 "	4505A - 544	N/A	R40H618	NR	NR	NR
	Ra	LG	15 " x 7 "	4505A - 544	N/A	R40H618	NR	SP7887S	SP7887S
1986									
	Fd	DN		7149 - D236	MD236[341]	69310693	69310782	NR	NR
	Fd	DN		7149 - D236	MD236[341]	69310693	69310782	NR	NR
	Fd	DN		7149 - D236	MD236[341]	69310693	69310782	NR	NR
	Fd	DN		7141 - D224	MD224[340]	69310693	60050153	NR	NR
	Ra	LG	15 " x 7 "	4505A - 544	N/A	R40H618	NR	SP7887S	SP7887S
	Ra	LG	15 " x 7 "	4505A - 544	N/A	R40H618	NR	NR	NR
1985									
	Fd	DN		7149 - D236	MD236[341]	69310693	R40H5523	NR	NR
	Fd	DN		7149 - D236	MD236[341]	69310693	R40H5523	NR	NR
	Fd	DN		7141 - D224	MD224[340]	69310693	60050153	NR	NR
	Fd	DN		7149 - D236	MD236[341]	69310693	R40H5523	NR	NR
	Ra	LG	15 " x 7 "	4505A - 544	N/A	R40H618	NR	SP7887S	SP7887S
	Ra	LG	15 " x 7 "	4505A - 544	N/A	R40H618	NR	NR	NR
1984									
	Fd	DN		7141 - D224	MD224[340]	69310693	60050153	NR	NR
	Fd	DN		7149 - D236	MD236[341]	69310693	R40H5523	NR	NR
	Fd	DN		7149 - D236	MD236[341]	69310693	R40H5523	NR	NR
	Fd	DN		7149 - D236	MD236[341]	69310693	R40H5523	NR	NR
	Ra	LG	15 " x 7 "	4505A - 544	N/A	R40H618	NR	NR	NR
	Ra	LG	15 " x 7 "	4505A - 544	N/A	R40H618	NR	SP7887S	SP7887S
1983									
	Ra	LG	15 " x 6 "	4504A - 543	N/A	R40H618	NR	NR	NR
	Ra	LG	15 " x 6 "	4504A - 543	N/A	R40H618	NR	SP7888S	SP7888S
	Ra	LG	15 " x 7 "	4505A - 544	N/A	R40H618	NR	SP7888S	SP7888S
	Ra	LG	15 " x 7 "	4505A - 544	N/A	R40H618	NR	NR	NR
F050, F055, F060	Fa	KH	14 " x 2-1/2 "	2060 - 361	Discontinued	R40H596	R40H9219	R40H3536	R40H3537
F070	Fa	WG	15 " x 3 "	1245C - 321	R700321	R40H521	R40H9237	R40H3502	R40H3503
	Fa	WG	15 " x 3 "	1245C - 321	R700321	R40H521	R40H9237	R40H3502	R40H3503
	Fa	WG	15 " x 3 "	1245C - 321	R700321	R40H521	R40H9237	R40H3502	R40H3503
	Fa	WG	15 " x 3 "	1245C - 321	R700321	R40H521	R40H9237	R40H3502	R40H3503

9 - 6 Stud, Dayton Rotor, Hat Style
43 - For Applications Taking A Longer Shim, Use R404151706
187 - 6 Stud, 6.443" Hub
37 - Also available as a New unit
53 - Power Brakes
188 - 6 Stud, 9.251" Hub
41 - Aluminum piston
186 - 10 Stud
204 - Right Hand; use E-4057 for Left Hand Expander Kits

MERITOR DRUM OR ROTOR NO.	CALIPER OR CYLINDER BORE SIZE	MERITOR CALIPER OR WHEEL CYLINDER (LEFT)	MERITOR CALIPER OR WHEEL CYLINDER (RIGHT)	MERITOR CALIPER OR WHEEL CYLINDER REPAIR KIT	MERITOR CALIPER PISTON	MERITOR MASTER CYLINDER	MERITOR MASTER CYLINDER KIT	MERITOR BRAKE HOSE (LEFT)	MERITOR BRAKE HOSE (RIGHT)
									FORD(Cont.)
LT800 SERIES: LOUISVILLE CONVENTIONAL 106.4 BBC TANDEM CHASSIS CAB TRUCK(Cont.)									
23-122700-002[9]	2-1/2 "	R424244X	R424244X[37]	60050266	69270757[41]	R4111995[53]	-	R4577454	R4577455
23-122691-002[188]	2-7/8 "	60050145X	60050145X[37]	60050146	69270702[41]	R4111995[53]	-	R4577454	R4577455
23-122703-002[186]	2-7/8 "	60050145X	60050145X[37]	60050146	69270702[41]	R4111995[53]	-	R4577454	R4577455
N/A	1-3/4 "	201183X	201184X[329]	SP7873S	NR	-	-	R4577870	R4577870
N/A	1-3/4 "	201179X	201180X	SP7873S	SP7880S[204]	-	-	R4577870	R4577870
23-122700-002[9]	2-1/2 "	R424244X	R424244X[37]	60050266	69270757[41]	R4111995[53]	-	R4577454	R4577455
23-122743-002[187]	2-7/8 "	60050145X	60050145X[37]	60050146	69270702[41]	R4111995[53]	-	R4577454	R4577455
23-122691-002[188]	2-7/8 "	60050145X	60050145X[37]	60050146	69270702[41]	R4111995[53]	-	R4577454	R4577455
23-122703-002[186]	2-7/8 "	60050145X	60050145X[37]	60050146	69270702[41]	R4111995[53]	-	R4577454	R4577455
N/A	1-3/4 "	201183X	201184X[329]	SP7873S	NR	-	-	R4577870	R4577870
N/A	1-3/4 "	201179X	201180X	SP7873S	SP7880S[204]	-	-	R4577870	R4577870
23-122700-002[9]	2-1/2 "	R424244X	R424244X[37]	60050266	69270757[41]	R4111995[53]	-	R4577454	R4577455
23-122743-002[187]	2-7/8 "	60050145X	60050145X[37]	60050146	69270702[41]	R4111995[53]	-	R4577454	R4577455
23-122703-002[186]	2-7/8 "	60050145X	60050145X[37]	60050146	69270702[41]	R4111995[53]	-	R4577454	R4577455
23-122691-002[188]	2-7/8 "	60050145X	60050145X[37]	60050146	69270702[41]	R4111995[53]	-	R4577454	R4577455
N/A	1-3/4 "	201183X	201184X[329]	SP7873S	NR	-	-	N/A	N/A
N/A	1-3/4 "	201179X	201180X	SP7873S	SP7880S[204]	-	-	N/A	N/A
23-122703-002[186]	2-7/8 "	60050145X	60050145X[37]	60050146	69270702[41]	R4111995[53]	-	R4577454	R4577455
23-122700-002[9]	2-1/2 "	R424244X	R424244X[37]	60050266	69270757[41]	R4111995[53]	-	R4577454	R4577455
23-122743-002[187]	2-7/8 "	60050145X	60050145X[37]	60050146	69270702[41]	R4111995[53]	-	R4577454	R4577455
23-122691-002[188]	2-7/8 "	60050145X	60050145X[37]	60050146	69270702[41]	R4111995[53]	-	R4577454	R4577455
N/A	1-3/4 "	201179X	201180X	SP7873S	SP7880S[204]	-	-	N/A	N/A
N/A	1-3/4 "	201183X	201184X[329]	SP7873S	NR	-	-	N/A	N/A
23-122743-002[187]	2-7/8 "	60050145X	60050145X[37]	60050146	69270702[41]	R4111995[53]	-	R4577454	R4577455
23-122703-002[186]	2-7/8 "	60050145X	60050145X[37]	60050146	69270702[41]	R4111995[53]	-	R4577454	R4577455
23-122691-002[188]	2-7/8 "	60050145X	60050145X[37]	60050146	69270702[41]	R4111995[53]	-	R4577454	R4577455
23-122700-002[9]	2-1/2 "	R424244X	R424244X[37]	60050266	69270757[41]	R4111995[53]	-	R4577454	R4577455
N/A	1-3/4 "	201183X	201184X[329]	SP7873S	NR	-	-	N/A	N/A
N/A	1-3/4 "	201179X	201180X	SP7873S	SP7880S[204]	-	-	N/A	N/A
23-122703-002[186]	2-7/8 "	60050145X	60050145X[37]	60050146	69270702[41]	R4111995[53]	-	R4577454	R4577455
23-122691-002[188]	2-7/8 "	60050145X	60050145X[37]	60050146	69270702[41]	R4111995[53]	-	R4577454	R4577455
23-122700-002[9]	2-1/2 "	R424244X	R424244X[37]	60050266	69270757[41]	R4111995[53]	-	R4577454	R4577455
23-122743-002[187]	2-7/8 "	60050145X	60050145X[37]	60050146	69270702[41]	R4111995[53]	-	R4577454	R4577455
N/A	1-3/4 "	201183X	201184X[329]	SP7873S	NR	-	-	N/A	N/A
N/A	1-3/4 "	201179X	201180X	SP7873S	SP7880S[204]	-	-	N/A	N/A
23-122700-002[9]	2-1/2 "	R424244X	R424244X[37]	60050266	69270757[41]	R4111995[53]	-	R4577454	R4577455
23-122691-002[188]	2-7/8 "	60050145X	60050145X[37]	60050146	69270702[41]	R4111995[53]	-	R4577454	R4577455
23-122743-002[187]	2-7/8 "	60050145X	60050145X[37]	60050146	69270702[41]	R4111995[53]	-	R4577454	R4577455
23-122703-002[186]	2-7/8 "	60050145X	60050145X[37]	60050146	69270702[41]	R4111995[53]	-	R4577454	R4577455
N/A	1-3/4 "	201179X	201180X	SP7873S	SP7880S[204]	-	-	N/A	N/A
N/A	1-3/4 "	201183X	201184X[329]	SP7873S	NR	-	-	N/A	N/A
N/A	1-5/8 "	201181	201182	SP7895S	NR	-	-	R4577147	R4577147
N/A	1-5/8 "	201185	201186[329]	SP7895S	NR	-	-	R4577147	R4577147
N/A	1-5/8 "	201185	201186[329]	SP7895S	NR	-	-	R4577147	R4577147
N/A	1-5/8 "	201181	201182	SP7895S	NR	-	-	R4577147	R4577147
N/A	1.09375	R4133484	R4133485	R4166819	NR	R4111629[53]	R4122484	R4577460	R4577460
N/A	1-1/8 "	R4133716	R4133717	R4166926	NR	R4111772[53]	R4122488	R4577454	R4577455
N/A	1-1/8 "	R4133714	R4133715	R4166926	NR	R4111995[53]	-	R4577454	R4577455
N/A	1-1/8 "	R4133719	R4133718	R4166926	NR	R4111634[53]	N/A	R4577452	R4577453
N/A	1-1/8 "	R4133714	R4133715	R4166926	NR	R4111631[221]	R4122486	R4577452	R4577453

221 - Power Brakes, 17,500 or 18,500 lb. Rear Axle
329 - Forward
340 - Use 69160457 for Disc Pad Retainer Clip
341 - Use 69160445 for Disc Pad Retainer Clip

MAKE MODEL YEAR AXLE CODE AXLE WEIGHT	AXLE & BRK. TYPE	BRK. MFG.	BRAKE SIZE	FMSI	MERITOR DISC PAD OR BRAKE SHOE	MERITOR GUIDE PIN OR RETURN SPRING KIT	MERITOR CALIPER HWD. KIT OR RETURN SPRING KIT	MERITOR ADJUSTER KIT (LEFT WHEEL)	MERITOR ADJUSTER KIT (RIGHT WHEEL)
FORD(Cont.)									
LT800 SERIES: LOUISVILLE CONVENTIONAL 106.4 BBC TANDEM CHASSIS CAB TRUCK(Cont.)									
1983									
	Fd	DN		7141 - D224	MD224[340]	69310693	60050153	NR	NR
F080, F090	Fd	DN		7149 - D236	MD236[341]	69310693	R40H5523	NR	NR
	Fd	DN		7149 - D236	MD236[341]	69310693	R40H5523	NR	NR
F090, F120	Fa	WG	15 " x 3 "	1245C - 321	R700321	R40H521	R40H9237	R40H3502	R40H3503
	Fa	WG	15 " x 3 "	1245C - 321	R700321	R40H521	R40H9237	R40H3502	R40H3503
R170, R175	Ra	KH	15 " x 5 "	4646 - 400	R700400	R40H595	R40H9220	R40H3538	R40H3539
	Ra	WG	15 " x 5 "	1252 - 346	R700346	R40H597	R40H9200	R40H3540	R40H3541
R185	Ra	WG	15 " x 6 "	4596 - 381	R700381	R40H597	R40H9200	R40H3540	R40H3541
	Ra	WG	15 " x 7 "	4597 - 383	R700383	R40H597	R40H9200	R40H3540	R40H3541
1982									
	Ra	LG	15 " x 6 "	4504A - 543	N/A	R40H618	NR	NR	NR
	Ra	LG	15 " x 6 "	4504A - 543	N/A	R40H618	NR	SP7888S	SP7888S
	Ra	LG	15 " x 7 "	4505A - 544	N/A	R40H618	NR	SP7888S	SP7888S
	Ra	LG	15 " x 7 "	4505A - 544	N/A	R40H618	NR	NR	NR
F050, F055, F060	Fa	KH	14 " x 2-1/2 "	2060 - 361	Discontinued	R40H596	R40H9219	R40H3536	R40H3537
F070	Fa	WG	15 " x 3 "	1245C - 321	R700321	R40H521	R40H9237	R40H3502	R40H3503
	Fa	WG	15 " x 3 "	1245C - 321	R700321	R40H521	R40H9237	R40H3502	R40H3503
	Fa	WG	15 " x 3 "	1245C - 321	R700321	R40H521	R40H9237	R40H3502	R40H3503
	Fa	WG	15 " x 3 "	1245C - 321	R700321	R40H521	R40H9237	R40H3502	R40H3503
	Fd	DN		7141 - D224	MD224[340]	69310693	60050153	NR	NR
F080, F090	Fd	DN		7149 - D236	MD236[341]	69310693	R40H5523	NR	NR
	Fd	DN		7149 - D236	MD236[341]	69310693	R40H5523	NR	NR
F090, F120	Fa	WG	15 " x 3 "	1245C - 321	R700321	R40H521	R40H9237	R40H3502	R40H3503
	Fa	WG	15 " x 3 "	1245C - 321	R700321	R40H521	R40H9237	R40H3502	R40H3503
R170, R175	Ra	KH	15 " x 5 "	4646 - 400	R700400	R40H595	R40H9220	R40H3538	R40H3539
	Ra	WG	15 " x 5 "	1252 - 346	R700346	R40H597	R40H9200	R40H3540	R40H3541
R185	Ra	WG	15 " x 6 "	4596 - 381	R700381	R40H597	R40H9200	R40H3540	R40H3541
	Ra	WG	15 " x 7 "	4597 - 383	R700383	R40H597	R40H9200	R40H3540	R40H3541
1981									
	Ra	LG	15 " x 6 "	4504A - 543	N/A	R40H618	NR	SP7888S	SP7888S
	Ra	LG	15 " x 6 "	4504A - 543	N/A	R40H618	NR	NR	NR
	Ra	LG	15 " x 7 "	4505A - 544	N/A	R40H618	NR	SP7888S	SP7888S
	Ra	LG	15 " x 7 "	4505A - 544	N/A	R40H618	NR	NR	NR
F050, F055, F060	Fa	KH	14 " x 2-1/2 "	2060 - 361	Discontinued	R40H596	R40H9219	R40H3536	R40H3537
F070	Fa	WG	15 " x 3 "	1245C - 321	R700321	R40H521	R40H9237	R40H3502	R40H3503
	Fa	WG	15 " x 3 "	1245C - 321	R700321	R40H521	R40H9237	R40H3502	R40H3503
	Fa	WG	15 " x 3 "	1245C - 321	R700321	R40H521	R40H9237	R40H3502	R40H3503
	Fa	WG	15 " x 3 "	1245C - 321	R700321	R40H521	R40H9237	R40H3502	R40H3503
	Fd	DN		7141 - D224	MD224[340]	69310693	60050153	NR	NR
F080, F090	Fd	DN		7149 - D236	MD236[341]	69310693	R40H5523	NR	NR
	Fd	DN		7149 - D236	MD236[341]	69310693	R40H5523	NR	NR
F090, F120	Fa	WG	15 " x 3 "	1245C - 321	R700321	R40H521	R40H9237	R40H3502	R40H3503
	Fa	WG	15 " x 3 "	1245C - 321	R700321	R40H521	R40H9237	R40H3502	R40H3503
R170, R175	Ra	KH	15 " x 5 "	4646 - 400	R700400	R40H595	R40H9220	R40H3538	R40H3539
	Ra	WG	15 " x 5 "	1252 - 346	R700346	R40H597	R40H9200	R40H3540	R40H3541
R185	Ra	WG	15 " x 6 "	4596 - 381	R700381	R40H597	R40H9200	R40H3540	R40H3541
	Ra	WG	15 " x 7 "	4597 - 383	R700383	R40H597	R40H9200	R40H3540	R40H3541
1980									
	Ra	LG	15 " x 6 "	4504A - 543	N/A	R40H618	NR	SP7888S	SP7888S
	Ra	LG	15 " x 6 "	4504A - 543	N/A	R40H618	NR	NR	NR
	Ra	LG	15 " x 7 "	4505A - 544	N/A	R40H618	NR	SP7888S	SP7888S
	Ra	LG	15 " x 7 "	4505A - 544	N/A	R40H618	NR	NR	NR
F050, F055, F060	Fa	KH	14 " x 2-1/2 "	2060 - 361	Discontinued	R40H596	R40H9219	R40H3536	R40H3537
F070	Fa	WG	15 " x 3 "	1245C - 321	R700321	R40H521	R40H9237	R40H3502	R40H3503
	Fa	WG	15 " x 3 "	1245C - 321	R700321	R40H521	R40H9237	R40H3502	R40H3503
	Fa	WG	15 " x 3 "	1245C - 321	R700321	R40H521	R40H9237	R40H3502	R40H3503
	Fa	WG	15 " x 3 "	1245C - 321	R700321	R40H521	R40H9237	R40H3502	R40H3503
	Fd	DN		7141 - D224	MD224[340]	69310693	60050153	NR	NR
F080, F090	Fd	DN		7149 - D236	MD236[341]	69310693	R40H5523	NR	NR
	Fd	DN		7149 - D236	MD236[341]	69310693	R40H5523	NR	NR
F090, F120	Fa	WG	15 " x 3 "	1245C - 321	R700321	R40H521	R40H9237	R40H3502	R40H3503
	Fa	WG	15 " x 3 "	1245C - 321	R700321	R40H521	R40H9237	R40H3502	R40H3503
R170, R175	Ra	KH	15 " x 5 "	4646 - 400	R700400	R40H595	R40H9220	R40H3538	R40H3539

9 - 6 Stud, Dayton Rotor, Hat Style
53 - Power Brakes
214 - Power Brakes, Split System
37 - Also available as a New unit
186 - 10 Stud
221 - Power Brakes, 17,500 or 18,500 lb. Rear Axle
41 - Aluminum piston
188 - 6 Stud, 9.251" Hub
222 - Power Brakes, 18,500 or 22,000 lb. Rear Axle

MERITOR DRUM OR ROTOR NO.	CALIPER OR CYLINDER BORE SIZE	MERITOR CALIPER OR WHEEL CYLINDER (LEFT)	MERITOR CALIPER OR WHEEL CYLINDER (RIGHT)	MERITOR CALIPER OR WHEEL CYLINDER REPAIR KIT	MERITOR CALIPER PISTON	MERITOR MASTER CYLINDER	MERITOR MASTER CYLINDER KIT	MERITOR BRAKE HOSE (LEFT)	MERITOR BRAKE HOSE (RIGHT)
									FORD(Cont.)
LT800 SERIES: LOUISVILLE CONVENTIONAL 106.4 BBC TANDEM CHASSIS CAB TRUCK(Cont.)									
23-122700-002[9]	2-1/2 "	R424244X	R424244X[37]	60050266	69270757[41]	R4111992[214]	R4122386	R4577452	R4577453
23-122703-002[186]	2-7/8 "	60050145X	60050145X[37]	60050146	69270702[41]	R4111992[214]	R4122386	R4577452	R4577453
23-122691-002[188]	2-7/8 "	60050145X	60050145X[37]	60050146	69270702[41]	R4111992[214]	R4122386	R4577452	R4577453
N/A	1-1/4 "	R4133720	R4133721	R4166923	NR	R4111630[222]	N/A	R4577452	R4577453
N/A	1-1/4 "	R4133581	R4133581	R4166923	NR	R4111992[214]	R4122386	R4577452	R4577453
N/A	1-1/2 "	R4033607	R4033607	R4166818	NR	-	-	R4577147	R4577147
N/A	1-5/8 "	R4133338	R4133338	R4166689	NR	-	-	R4577147	R4577147
N/A	1-5/8 "	R4133338	R4133338	R4166689	NR	-	-	R4577147	R4577147
N/A	1-3/4 "	R4133400	R4133400	R4166917	NR	-	-	R4577147	R4577147
N/A	1-5/8 "	201181	201182	SP7895S	NR	-	-	R4577147	R4577147
N/A	1-5/8 "	201185	201186[329]	SP7895S	NR	-	-	R4577147	R4577147
N/A	1-5/8 "	201185	201186[329]	SP7895S	NR	-	-	R4577147	R4577147
N/A	1-5/8 "	201181	201182	SP7895S	NR	-	-	R4577147	R4577147
N/A	1.09375	R4133484	R4133485	R4166819	NR	R4111629[53]	R4122484	R4577460	R4577460
N/A	1-1/8 "	R4133716	R4133717	R4166926	NR	R4111772[53]	R4122488	R4577454	R4577455
N/A	1-1/8 "	R4133719	R4133718	R4166926	NR	R4111634[53]	N/A	R4577452	R4577453
N/A	1-1/8 "	R4133714	R4133715	R4166926	NR	R4111995[53]	-	R4577454	R4577455
N/A	1-1/8 "	R4133714	R4133715	R4166926	NR	R4111631[221]	R4122486	R4577452	R4577453
23-122700-002[9]	2-1/2 "	R424244X	R424244X[37]	60050266	69270757[41]	R4111992[214]	R4122386	R4577452	R4577453
23-122691-002[188]	2-7/8 "	60050145X	60050145X[37]	60050146	69270702[41]	R4111992[214]	R4122386	R4577452	R4577453
23-122703-002[186]	2-7/8 "	60050145X	60050145X[37]	60050146	69270702[41]	R4111992[214]	R4122386	R4577452	R4577453
N/A	1-1/4 "	R4133720	R4133721	R4166923	NR	R4111630[222]	N/A	R4577452	R4577453
N/A	1-1/4 "	R4133581	R4133581	R4166923	NR	R4111992[214]	R4122386	R4577452	R4577453
N/A	1-1/2 "	R4033607	R4033607	R4166818	NR	-	-	R4577147	R4577147
N/A	1-5/8 "	R4133338	R4133338	R4166689	NR	-	-	R4577147	R4577147
N/A	1-5/8 "	R4133338	R4133338	R4166689	NR	-	-	R4577147	R4577147
N/A	1-3/4 "	R4133400	R4133400	R4166917	NR	-	-	R4577147	R4577147
N/A	1-5/8 "	201185	201186[329]	SP7895S	NR	-	-	R4577147	R4577147
N/A	1-5/8 "	201181	201182	SP7895S	NR	-	-	R4577147	R4577147
N/A	1-5/8 "	201185	201186[329]	SP7895S	NR	-	-	R4577147	R4577147
N/A	1-5/8 "	201181	201182	SP7895S	NR	-	-	R4577147	R4577147
N/A	1.09375	R4133484	R4133485	R4166819	NR	R4111629[53]	R4122484	R4577460	R4577460
N/A	1-1/8 "	R4133719	R4133718	R4166926	NR	R4111634[53]	N/A	R4577452	R4577453
N/A	1-1/8 "	R4133714	R4133715	R4166926	NR	R4111631[221]	R4122486	R4577452	R4577453
N/A	1-1/8 "	R4133714	R4133715	R4166926	NR	R4111995[53]	-	R4577454	R4577455
N/A	1-1/8 "	R4133716	R4133717	R4166926	NR	R4111772[53]	R4122488	R4577454	R4577455
23-122700-002[9]	2-1/2 "	R424244X	R424244X[37]	60050266	69270757[41]	R4111992[214]	R4122386	R4577452	R4577453
23-122703-002[186]	2-7/8 "	60050145X	60050145X[37]	60050146	69270702[41]	R4111992[214]	R4122386	R4577452	R4577453
23-122691-002[188]	2-7/8 "	60050145X	60050145X[37]	60050146	69270702[41]	R4111992[214]	R4122386	R4577452	R4577453
N/A	1-1/4 "	R4133581	R4133581	R4166923	NR	R4111992[214]	R4122386	R4577452	R4577453
N/A	1-1/4 "	R4133720	R4133721	R4166923	NR	R4111630[222]	N/A	R4577452	R4577453
N/A	1-1/2 "	R4033607	R4033607	R4166818	NR	-	-	R4577147	R4577147
N/A	1-5/8 "	R4133338	R4133338	R4166689	NR	-	-	R4577147	R4577147
N/A	1-5/8 "	R4133338	R4133338	R4166689	NR	-	-	R4577147	R4577147
N/A	1-3/4 "	R4133400	R4133400	R4166917	NR	-	-	R4577147	R4577147
N/A	1-5/8 "	201185	201186[329]	SP7895S	NR	-	-	R4577147	R4577147
N/A	1-5/8 "	201181	201182	SP7895S	NR	-	-	R4577147	R4577147
N/A	1-5/8 "	201185	201186[329]	SP7895S	NR	-	-	R4577147	R4577147
N/A	1-5/8 "	201181	201182	SP7895S	NR	-	-	R4577147	R4577147
N/A	1.09375	R4133484	R4133485	R4166819	NR	R4111629[53]	R4122484	R4577460	R4577460
N/A	1-1/8 "	R4133714	R4133715	R4166926	NR	R4111631[221]	R4122486	R4577452	R4577453
N/A	1-1/8 "	R4133716	R4133717	R4166926	NR	R4111772[53]	R4122488	R4577454	R4577455
N/A	1-1/8 "	R4133719	R4133718	R4166926	NR	R4111634[53]	N/A	R4577452	R4577453
N/A	1-1/8 "	R4133714	R4133715	R4166926	NR	R4111995[53]	-	R4577454	R4577455
23-122700-002[9]	2-1/2 "	R424244X	R424244X[37]	60050266	69270757[41]	R4111992[214]	R4122386	R4577452	R4577453
23-122691-002[188]	2-7/8 "	60050145X	60050145X[37]	60050146	69270702[41]	R4111992[214]	R4122386	R4577452	R4577453
23-122703-002[186]	2-7/8 "	60050145X	60050145X[37]	60050146	69270702[41]	R4111992[214]	R4122386	R4577452	R4577453
N/A	1-1/4 "	R4133720	R4133721	R4166923	NR	R4111630[222]	N/A	R4577452	R4577453
N/A	1-1/4 "	R4133581	R4133581	R4166923	NR	R4111992[214]	R4122386	R4577452	R4577453
N/A	1-1/2 "	R4033607	R4033607	R4166818	NR	-	-	R4577147	R4577147

329 - Forward

340 - Use 69160457 for Disc Pad Retainer Clip

341 - Use 69160445 for Disc Pad Retainer Clip

MAKE MODEL YEAR AXLE CODE AXLE WEIGHT	AXLE & BRK. TYPE	BRK. MFG.	BRAKE SIZE	FMSI	MERITOR DISC PAD OR BRAKE SHOE	MERITOR GUIDE PIN OR RETURN SPRING KIT	MERITOR CALIPER HWD. KIT OR RETURN SPRING KIT	MERITOR ADJUSTER KIT (LEFT WHEEL)	MERITOR ADJUSTER KIT (RIGHT WHEEL)
FORD(Cont.)									
LT800 SERIES: LOUISVILLE CONVENTIONAL 106.4 BBC TANDEM CHASSIS CAB TRUCK(Cont.)									
1980									
R170, R175	Ra	WG	15 " x 5 "	1252 - 346	R700346	R40H597	R40H9200	R40H3540	R40H3541
R185	Ra	WG	15 " x 6 "	4596 - 381	R700381	R40H597	R40H9200	R40H3540	R40H3541
	Ra	WG	15 " x 7 "	4597 - 383	R700383	R40H597	R40H9200	R40H3540	R40H3541
1979									
	Ra	LG	15 " x 6 "	4504A - 543	N/A	R40H618	NR	SP7888S	SP7888S
	Ra	LG	15 " x 6 "	4504A - 543	N/A	R40H618	NR	NR	NR
	Ra	LG	15 " x 7 "	4505A - 544	N/A	R40H618	NR	NR	NR
	Ra	LG	15 " x 7 "	4505A - 544	N/A	R40H618	NR	SP7888S	SP7888S
F050, F055, F060	Fa	KH	14 " x 2-1/2 "	2060 - 361	Discontinued	R40H596	R40H9219	R40H3536	R40H3537
F070	Fa	WG	15 " x 3 "	1245C - 321	R700321	R40H521	R40H9237	R40H3502	R40H3503
	Fa	WG	15 " x 3 "	1245C - 321	R700321	R40H521	R40H9237	R40H3502	R40H3503
	Fa	WG	15 " x 3 "	1245C - 321	R700321	R40H521	R40H9237	R40H3502	R40H3503
	Fa	WG	15 " x 3 "	1245C - 321	R700321	R40H521	R40H9237	R40H3502	R40H3503
	Fd	DN		7141 - D224	MD224[340]	69310693	60050153	NR	NR
F080, F090	Fd	DN		7149 - D236	MD236[341]	69310693	R40H5523	NR	NR
	Fd	DN		7149 - D236	MD236[341]	69310693	R40H5523	NR	NR
F090, F120	Fa	WG	15 " x 3 "	1245C - 321	R700321	R40H521	R40H9237	R40H3502	R40H3503
	Fa	WG	15 " x 3 "	1245C - 321	R700321	R40H521	R40H9237	R40H3502	R40H3503
R170, R175	Ra	KH	15 " x 5 "	4646 - 400	R700400	R40H595	R40H9220	R40H3538	R40H3539
	Ra	WG	15 " x 5 "	1252 - 346	R700346	R40H597	R40H9200	R40H3540	R40H3541
R185	Ra	WG	15 " x 6 "	4596 - 381	R700381	R40H597	R40H9200	R40H3540	R40H3541
	Ra	WG	15 " x 7 "	4597 - 383	R700383	R40H597	R40H9200	R40H3540	R40H3541
1978									
	Ra	LG	15 " x 6 "	4504A - 543	N/A	R40H618	NR	SP7888S	SP7888S
	Ra	LG	15 " x 6 "	4504A - 543	N/A	R40H618	NR	NR	NR
	Ra	LG	15 " x 7 "	4505A - 544	N/A	R40H618	NR	SP7888S	SP7888S
	Ra	LG	15 " x 7 "	4505A - 544	N/A	R40H618	NR	NR	NR
F050, F055, F060	Fa	KH	14 " x 2-1/2 "	2060 - 361	Discontinued	R40H596	R40H9219	R40H3536	R40H3537
F070	Fa	WG	15 " x 3 "	1245C - 321	R700321	R40H521	R40H9237	R40H3502	R40H3503
	Fa	WG	15 " x 3 "	1245C - 321	R700321	R40H521	R40H9237	R40H3502	R40H3503
	Fa	WG	15 " x 3 "	1245C - 321	R700321	R40H521	R40H9237	R40H3502	R40H3503
	Fa	WG	15 " x 3 "	1245C - 321	R700321	R40H521	R40H9237	R40H3502	R40H3503
	Fd	DN		7141 - D224	MD224[340]	69310693	60050153	NR	NR
F080, F090	Fd	DN		7149 - D236	MD236[341]	69310693	R40H5523	NR	NR
	Fd	DN		7149 - D236	MD236[341]	69310693	R40H5523	NR	NR
F090, F120	Fa	WG	15 " x 3 "	1245C - 321	R700321	R40H521	R40H9237	R40H3502	R40H3503
	Fa	WG	15 " x 3 "	1245C - 321	R700321	R40H521	R40H9237	R40H3502	R40H3503
R170, R175	Ra	KH	15 " x 5 "	4646 - 400	R700400	R40H595	R40H9220	R40H3538	R40H3539
	Ra	WG	15 " x 5 "	1252 - 346	R700346	R40H597	R40H9200	R40H3540	R40H3541
R185	Ra	WG	15 " x 6 "	4596 - 381	R700381	R40H597	R40H9200	R40H3540	R40H3541
	Ra	WG	15 " x 7 "	4597 - 383	R700383	R40H597	R40H9200	R40H3540	R40H3541
1977									
	Ra	LG	15 " x 6 "	4504A - 543	N/A	R40H618	NR	NR	NR
	Ra	LG	15 " x 6 "	4504A - 543	N/A	R40H618	NR	SP7888S	SP7888S
	Ra	LG	15 " x 7 "	4505A - 544	N/A	R40H618	NR	SP7888S	SP7888S
	Ra	LG	15 " x 7 "	4505A - 544	N/A	R40H618	NR	NR	NR
F050, F055, F060	Fa	KH	14 " x 2-1/2 "	2060 - 361	Discontinued	R40H596	R40H9219	R40H3536	R40H3537
F070	Fa	WG	15 " x 3 "	1245C - 321	R700321	R40H521	R40H9237	R40H3502	R40H3503
	Fa	WG	15 " x 3 "	1245C - 321	R700321	R40H521	R40H9237	R40H3502	R40H3503
	Fa	WG	15 " x 3 "	1245C - 321	R700321	R40H521	R40H9237	R40H3502	R40H3503
	Fa	WG	15 " x 3 "	1245C - 321	R700321	R40H521	R40H9237	R40H3502	R40H3503
	Fd	DN		7141 - D224	MD224[340]	69310693	60050153	NR	NR
F080, F090	Fd	DN		7149 - D236	MD236[341]	69310693	R40H5523	NR	NR
	Fd	DN		7149 - D236	MD236[341]	69310693	R40H5523	NR	NR
F090, F120	Fa	WG	15 " x 3 "	1245C - 321	R700321	R40H521	R40H9237	R40H3502	R40H3503
	Fa	WG	15 " x 3 "	1245C - 321	R700321	R40H521	R40H9237	R40H3502	R40H3503
R170, R175	Ra	KH	15 " x 5 "	4646 - 400	R700400	R40H595	R40H9220	R40H3538	R40H3539
	Ra	WG	15 " x 5 "	1252 - 346	R700346	R40H597	R40H9200	R40H3540	R40H3541
R185	Ra	WG	15 " x 6 "	4596 - 381	R700381	R40H597	R40H9200	R40H3540	R40H3541
	Ra	WG	15 " x 7 "	4597 - 383	R700383	R40H597	R40H9200	R40H3540	R40H3541
1976									
	Ra	LG	15 " x 6 "	4504A - 543	N/A	R40H618	NR	NR	NR
	Ra	LG	15 " x 6 "	4504A - 543	N/A	R40H618	NR	SP7888S	SP7888S

9 - 6 Stud, Dayton Rotor, Hat Style
53 - Power Brakes
214 - Power Brakes, Split System

37 - Also available as a New unit
186 - 10 Stud
221 - Power Brakes, 17,500 or 18,500 lb. Rear Axle

41 - Aluminum piston
188 - 6 Stud, 9.251" Hub
222 - Power Brakes, 18,500 or 22,000 lb. Rear Axle

MERITOR DRUM OR ROTOR NO.	CALIPER OR CYLINDER BORE SIZE	MERITOR CALIPER OR WHEEL CYLINDER (LEFT)	MERITOR CALIPER OR WHEEL CYLINDER (RIGHT)	MERITOR CALIPER OR WHEEL CYLINDER REPAIR KIT	MERITOR CALIPER PISTON	MERITOR MASTER CYLINDER	MERITOR MASTER CYLINDER KIT	MERITOR BRAKE HOSE (LEFT)	MERITOR BRAKE HOSE (RIGHT)
									FORD(Cont.)
LT800 SERIES: LOUISVILLE CONVENTIONAL 106.4 BBC TANDEM CHASSIS CAB TRUCK(Cont.)									
N/A	1-5/8 "	R4133338	R4133338	R4166689	NR	-	-	R4577147	R4577147
N/A	1-5/8 "	R4133338	R4133338	R4166689	NR	-	-	R4577147	R4577147
N/A	1-3/4 "	R4133400	R4133400	R4166917	NR	-	-	R4577147	R4577147
N/A	1-5/8 "	201185	201186[329]	SP7895S	NR	-	-	R4577147	R4577147
N/A	1-5/8 "	201181	201182	SP7895S	NR	-	-	R4577147	R4577147
N/A	1-5/8 "	201181	201182	SP7895S	NR	-	-	R4577147	R4577147
N/A	1-5/8 "	201185	201186[329]	SP7895S	NR	-	-	R4577147	R4577147
N/A	1.09375	R4133484	R4133485	R4166819	NR	R4111629[53]	R4122484	R4577460	R4577460
N/A	1-1/8 "	R4133714	R4133715	R4166926	NR	R4111995[53]	-	R4577454	R4577455
N/A	1-1/8 "	R4133716	R4133717	R4166926	NR	R4111772[53]	R4122488	R4577454	R4577455
N/A	1-1/8 "	R4133714	R4133715	R4166926	NR	R4111631[221]	R4122486	R4577452	R4577453
N/A	1-1/8 "	R4133719	R4133718	R4166926	NR	R4111634[53]	N/A	R4577452	R4577453
23-122700-002[9]	2-1/2 "	R424244X	R424244X[37]	60050266	69270757[41]	R4111992[214]	R4122386	R4577452	R4577453
23-122703-002[186]	2-7/8 "	60050145X	60050145X[37]	60050146	69270702[41]	R4111992[214]	R4122386	R4577452	R4577453
23-122691-002[188]	2-7/8 "	60050145X	60050145X[37]	60050146	69270702[41]	R4111992[214]	R4122386	R4577452	R4577453
N/A	1-1/4 "	R4133720	R4133721	R4166923	NR	R4111630[222]	N/A	R4577452	R4577453
N/A	1-1/4 "	R4133581	R4133581	R4166923	NR	R4111992[214]	R4122386	R4577452	R4577453
N/A	1-1/2 "	R4033607	R4033607	R4166818	NR	-	-	R4577147	R4577147
N/A	1-5/8 "	R4133338	R4133338	R4166689	NR	-	-	R4577147	R4577147
N/A	1-5/8 "	R4133338	R4133338	R4166689	NR	-	-	R4577147	R4577147
N/A	1-3/4 "	R4133400	R4133400	R4166917	NR	-	-	R4577147	R4577147
N/A	1-5/8 "	201185	201186[329]	SP7895S	NR	-	-	R4577147	R4577147
N/A	1-5/8 "	201181	201182	SP7895S	NR	-	-	R4577147	R4577147
N/A	1-5/8 "	201185	201186[329]	SP7895S	NR	-	-	R4577147	R4577147
N/A	1-5/8 "	201181	201182	SP7895S	NR	-	-	R4577147	R4577147
N/A	1.09375	R4133484	R4133485	R4166819	NR	R4111629[53]	R4122484	R4577460	R4577460
N/A	1-1/8 "	R4133716	R4133717	R4166926	NR	R4111772[53]	R4122488	R4577454	R4577455
N/A	1-1/8 "	R4133714	R4133715	R4166926	NR	R4111995[53]	-	R4577454	R4577455
N/A	1-1/8 "	R4133719	R4133718	R4166926	NR	R4111634[53]	N/A	R4577452	R4577453
N/A	1-1/8 "	R4133714	R4133715	R4166926	NR	R4111631[221]	R4122486	R4577452	R4577453
23-122700-002[9]	2-1/2 "	R424244X	R424244X[37]	60050266	69270757[41]	R4111992[214]	R4122386	R4577452	R4577453
23-122703-002[186]	2-7/8 "	60050145X	60050145X[37]	60050146	69270702[41]	R4111992[214]	R4122386	R4577452	R4577453
23-122691-002[188]	2-7/8 "	60050145X	60050145X[37]	60050146	69270702[41]	R4111992[214]	R4122386	R4577452	R4577453
N/A	1-1/4 "	R4133720	R4133721	R4166923	NR	R4111630[222]	N/A	R4577452	R4577453
N/A	1-1/4 "	R4133581	R4133581	R4166923	NR	R4111992[214]	R4122386	R4577452	R4577453
N/A	1-1/2 "	R4033607	R4033607	R4166818	NR	-	-	R4577147	R4577147
N/A	1-5/8 "	R4133338	R4133338	R4166689	NR	-	-	R4577147	R4577147
N/A	1-5/8 "	R4133338	R4133338	R4166689	NR	-	-	R4577147	R4577147
N/A	1-3/4 "	R4133400	R4133400	R4166917	NR	-	-	R4577147	R4577147
N/A	1-5/8 "	201181	201182	SP7895S	NR	-	-	R4577147	R4577147
N/A	1-5/8 "	201185	201186[329]	SP7895S	NR	-	-	R4577147	R4577147
N/A	1-5/8 "	201185	201186[329]	SP7895S	NR	-	-	R4577147	R4577147
N/A	1-5/8 "	201181	201182	SP7895S	NR	-	-	R4577147	R4577147
N/A	1.09375	R4133484	R4133485	R4166819	NR	R4111629[53]	R4122484	R4577460	R4577460
N/A	1-1/8 "	R4133716	R4133717	R4166926	NR	R4111772[53]	R4122488	R4577454	R4577455
N/A	1-1/8 "	R4133714	R4133715	R4166926	NR	R4111995[53]	-	R4577454	R4577455
N/A	1-1/8 "	R4133719	R4133718	R4166926	NR	R4111634[53]	N/A	R4577452	R4577453
N/A	1-1/8 "	R4133714	R4133715	R4166926	NR	R4111631[221]	R4122486	R4577452	R4577453
23-122700-002[9]	2-1/2 "	R424244X	R424244X[37]	60050266	69270757[41]	R4111992[214]	R4122386	R4577452	R4577453
23-122691-002[188]	2-7/8 "	60050145X	60050145X[37]	60050146	69270702[41]	R4111992[214]	R4122386	R4577452	R4577453
23-122703-002[186]	2-7/8 "	60050145X	60050145X[37]	60050146	69270702[41]	R4111992[214]	R4122386	R4577452	R4577453
N/A	1-1/4 "	R4133720	R4133721	R4166923	NR	R4111630[222]	N/A	R4577452	R4577453
N/A	1-1/4 "	R4133581	R4133581	R4166923	NR	R4111992[214]	R4122386	R4577452	R4577453
N/A	1-1/2 "	R4033607	R4033607	R4166818	NR	-	-	R4577147	R4577147
N/A	1-5/8 "	R4133338	R4133338	R4166689	NR	-	-	R4577147	R4577147
N/A	1-5/8 "	R4133338	R4133338	R4166689	NR	-	-	R4577147	R4577147
N/A	1-3/4 "	R4133400	R4133400	R4166917	NR	-	-	R4577147	R4577147
N/A	1-5/8 "	201181	201182	SP7895S	NR	-	-	R4577147	R4577147
N/A	1-5/8 "	201185	201186[329]	SP7895S	NR	-	-	R4577147	R4577147

329 - Forward

340 - Use 69160457 for Disc Pad Retainer Clip

341 - Use 69160445 for Disc Pad Retainer Clip

MAKE MODEL YEAR AXLE CODE AXLE WEIGHT	AXLE & BRK. TYPE	BRK. MFG.	BRAKE SIZE	FMSI	MERITOR DISC PAD OR BRAKE SHOE	MERITOR GUIDE PIN OR RETURN SPRING KIT	MERITOR CALIPER HWD. KIT OR RETURN SPRING KIT	MERITOR ADJUSTER KIT (LEFT WHEEL)	MERITOR ADJUSTER KIT (RIGHT WHEEL)
FORD(Cont.)									
LT800 SERIES: LOUISVILLE CONVENTIONAL 106.4 BBC TANDEM CHASSIS CAB TRUCK(Cont.)									
1976									
	Ra	LG	15 " x 7 "	4505A - 544	N/A	R40H618	NR	SP7888S	SP7888S
	Ra	LG	15 " x 7 "	4505A - 544	N/A	R40H618	NR	NR	NR
F050, F055, F060	Fa	KH	14 " x 2-1/2 "	2060 - 361	Discontinued	R40H596	R40H9219	R40H3536	R40H3537
F070	Fa	WG	15 " x 3 "	1245C - 321	R700321	R40H521	R40H9237	R40H3502	R40H3503
	Fa	WG	15 " x 3 "	1245C - 321	R700321	R40H521	R40H9237	R40H3502	R40H3503
	Fa	WG	15 " x 3 "	1245C - 321	R700321	R40H521	R40H9237	R40H3502	R40H3503
	Fa	WG	15 " x 3 "	1245C - 321	R700321	R40H521	R40H9237	R40H3502	R40H3503
	Fd	DN		7141 - D224	MD224[340]	69310693	60050153	NR	NR
F080, F090	Fd	DN		7149 - D236	MD236[341]	69310693	R40H5523	NR	NR
	Fd	DN		7149 - D236	MD236[341]	69310693	R40H5523	NR	NR
F090, F120	Fa	WG	15 " x 3 "	1245C - 321	R700321	R40H521	R40H9237	R40H3502	R40H3503
	Fa	WG	15 " x 3 "	1245C - 321	R700321	R40H521	R40H9237	R40H3502	R40H3503
R170, R175	Ra	KH	15 " x 5 "	4646 - 400	R700400	R40H595	R40H9220	R40H3538	R40H3539
	Ra	WG	15 " x 5 "	1252 - 346	R700346	R40H597	R40H9200	R40H3540	R40H3541
R185	Ra	WG	15 " x 6 "	4596 - 381	R700381	R40H597	R40H9200	R40H3540	R40H3541
	Ra	WG	15 " x 7 "	4597 - 383	R700383	R40H597	R40H9200	R40H3540	R40H3541
1975									
	Ra	LG	15 " x 6 "	4504A - 543	N/A	R40H618	NR	NR	NR
	Ra	LG	15 " x 6 "	4504A - 543	N/A	R40H618	NR	SP7888S	SP7888S
	Ra	LG	15 " x 7 "	4505A - 544	N/A	R40H618	NR	NR	NR
	Ra	LG	15 " x 7 "	4505A - 544	N/A	R40H618	NR	SP7888S	SP7888S
F050, F055, F060	Fa	KH	14 " x 2-1/2 "	2060 - 361	Discontinued	R40H596	R40H9219	R40H3536	R40H3537
F070	Fa	WG	15 " x 3 "	1245C - 321	R700321	R40H521	R40H9237	R40H3502	R40H3503
	Fa	WG	15 " x 3 "	1245C - 321	R700321	R40H521	R40H9237	R40H3502	R40H3503
	Fa	WG	15 " x 3 "	1245C - 321	R700321	R40H521	R40H9237	R40H3502	R40H3503
	Fa	WG	15 " x 3 "	1245C - 321	R700321	R40H521	R40H9237	R40H3502	R40H3503
	Fd	DN		7141 - D224	MD224[340]	69310693	60050153	NR	NR
F080, F090	Fd	DN		7149 - D236	MD236[341]	69310693	R40H5523	NR	NR
	Fd	DN		7149 - D236	MD236[341]	69310693	R40H5523	NR	NR
F090, F120	Fa	WG	15 " x 3 "	1245C - 321	R700321	R40H521	R40H9237	R40H3502	R40H3503
	Fa	WG	15 " x 3 "	1245C - 321	R700321	R40H521	R40H9237	R40H3502	R40H3503
R170, R175	Ra	KH	15 " x 5 "	4646 - 400	R700400	R40H595	R40H9220	R40H3538	R40H3539
	Ra	WG	15 " x 5 "	1252 - 346	R700346	R40H597	R40H9200	R40H3540	R40H3541
R185	Ra	WG	15 " x 6 "	4596 - 381	R700381	R40H597	R40H9200	R40H3540	R40H3541
	Ra	WG	15 " x 7 "	4597 - 383	R700383	R40H597	R40H9200	R40H3540	R40H3541
1974									
	Ra	LG	15 " x 6 "	4504A - 543	N/A	R40H618	NR	NR	NR
	Ra	LG	15 " x 6 "	4504A - 543	N/A	R40H618	NR	SP7888S	SP7888S
	Ra	LG	15 " x 7 "	4505A - 544	N/A	R40H618	NR	SP7888S	SP7888S
	Ra	LG	15 " x 7 "	4505A - 544	N/A	R40H618	NR	NR	NR
F050, F055, F060	Fa	KH	14 " x 2-1/2 "	2060 - 361	Discontinued	R40H596	R40H9219	R40H3536	R40H3537
F070	Fa	WG	15 " x 3 "	1245C - 321	R700321	R40H521	R40H9237	R40H3502	R40H3503
	Fa	WG	15 " x 3 "	1245C - 321	R700321	R40H521	R40H9237	R40H3502	R40H3503
	Fa	WG	15 " x 3 "	1245C - 321	R700321	R40H521	R40H9237	R40H3502	R40H3503
	Fa	WG	15 " x 3 "	1245C - 321	R700321	R40H521	R40H9237	R40H3502	R40H3503
	Fd	DN		7141 - D224	MD224[340]	69310693	60050153	NR	NR
F080, F090	Fd	DN		7149 - D236	MD236[341]	69310693	R40H5523	NR	NR
	Fd	DN		7149 - D236	MD236[341]	69310693	R40H5523	NR	NR
F090, F120	Fa	WG	15 " x 3 "	1245C - 321	R700321	R40H521	R40H9237	R40H3502	R40H3503
	Fa	WG	15 " x 3 "	1245C - 321	R700321	R40H521	R40H9237	R40H3502	R40H3503
R170, R175	Ra	KH	15 " x 5 "	4646 - 400	R700400	R40H595	R40H9220	R40H3538	R40H3539
	Ra	WG	15 " x 5 "	1252 - 346	R700346	R40H597	R40H9200	R40H3540	R40H3541
R185	Ra	WG	15 " x 6 "	4596 - 381	R700381	R40H597	R40H9200	R40H3540	R40H3541
	Ra	WG	15 " x 7 "	4597 - 383	R700383	R40H597	R40H9200	R40H3540	R40H3541
1973									
	Ra	LG	15 " x 6 "	4504A - 543	N/A	R40H618	NR	NR	NR
	Ra	LG	15 " x 6 "	4504A - 543	N/A	R40H618	NR	SP7888S	SP7888S
	Ra	LG	15 " x 7 "	4505A - 544	N/A	R40H618	NR	NR	NR
	Ra	LG	15 " x 7 "	4505A - 544	N/A	R40H618	NR	SP7888S	SP7888S
F050, F055, F060	Fa	KH	14 " x 2-1/2 "	2060 - 361	Discontinued	R40H596	R40H9219	R40H3536	R40H3537
F070	Fa	WG	15 " x 3 "	1245C - 321	R700321	R40H521	R40H9237	R40H3502	R40H3503
	Fa	WG	15 " x 3 "	1245C - 321	R700321	R40H521	R40H9237	R40H3502	R40H3503
	Fa	WG	15 " x 3 "	1245C - 321	R700321	R40H521	R40H9237	R40H3502	R40H3503

9 - 6 Stud, Dayton Rotor, Hat Style
53 - Power Brakes
214 - Power Brakes, Split System
37 - Also available as a New unit
186 - 10 Stud
221 - Power Brakes, 17,500 or 18,500 lb. Rear Axle
41 - Aluminum piston
188 - 6 Stud, 9.251" Hub
222 - Power Brakes, 18,500 or 22,000 lb. Rear Axle

MERITOR DRUM OR ROTOR NO.	CALIPER OR CYLINDER BORE SIZE	MERITOR CALIPER OR WHEEL CYLINDER (LEFT)	MERITOR CALIPER OR WHEEL CYLINDER (RIGHT)	MERITOR CALIPER OR WHEEL CYLINDER REPAIR KIT	MERITOR CALIPER PISTON	MERITOR MASTER CYLINDER	MERITOR MASTER CYLINDER KIT	MERITOR BRAKE HOSE (LEFT)	MERITOR BRAKE HOSE (RIGHT)
									FORD(Cont.)
LT800 SERIES: LOUISVILLE CONVENTIONAL 106.4 BBC TANDEM CHASSIS CAB TRUCK(Cont.)									
N/A	1-5/8 "	201185	201186[329]	SP7895S	NR	-	-	R4577147	R4577147
N/A	1-5/8 "	201181	201182	SP7895S	NR	-	-	R4577147	R4577147
N/A	1.09375	R4133484	R4133485	R4166819	NR	R4111629[53]	R4122484	R4577460	R4577460
N/A	1-1/8 "	R4133716	R4133717	R4166926	NR	R4111772[53]	R4122488	R4577454	R4577455
N/A	1-1/8 "	R4133714	R4133715	R4166926	NR	R4111995[53]	-	R4577454	R4577455
N/A	1-1/8 "	R4133719	R4133718	R4166926	NR	R4111634[53]	N/A	R4577452	R4577453
N/A	1-1/8 "	R4133714	R4133715	R4166926	NR	R4111631[221]	R4122486	R4577452	R4577453
23-122700-002[9]	2-1/2 "	R424244X	R424244X[37]	60050266	69270757[41]	R4111992[214]	R4122386	R4577452	R4577453
23-122703-002[186]	2-7/8 "	60050145X	60050145X[37]	60050146	69270702[41]	R4111992[214]	R4122386	R4577452	R4577453
23-122691-002[188]	2-7/8 "	60050145X	60050145X[37]	60050146	69270702[41]	R4111992[214]	R4122386	R4577452	R4577453
N/A	1-1/4 "	R4133720	R4133721	R4166923	NR	R4111630[222]	N/A	R4577452	R4577453
N/A	1-1/4 "	R4133581	R4133581	R4166923	NR	R4111992[214]	R4122386	R4577452	R4577453
N/A	1-1/2 "	R4033607	R4033607	R4166818	NR	-	-	R4577147	R4577147
N/A	1-5/8 "	R4133338	R4133338	R4166689	NR	-	-	R4577147	R4577147
N/A	1-5/8 "	R4133338	R4133338	R4166689	NR	-	-	R4577147	R4577147
N/A	1-3/4 "	R4133400	R4133400	R4166917	NR	-	-	R4577147	R4577147
N/A	1-5/8 "	201181	201182	SP7895S	NR	-	-	R4577147	R4577147
N/A	1-5/8 "	201185	201186[329]	SP7895S	NR	-	-	R4577147	R4577147
N/A	1-5/8 "	201181	201182	SP7895S	NR	-	-	R4577147	R4577147
N/A	1-5/8 "	201185	201186[329]	SP7895S	NR	-	-	R4577147	R4577147
N/A	1.09375	R4133484	R4133485	R4166819	NR	R4111629[53]	R4122484	R4577460	R4577460
N/A	1-1/8 "	R4133714	R4133715	R4166926	NR	R4111995[53]	-	R4577454	R4577455
N/A	1-1/8 "	R4133714	R4133715	R4166926	NR	R4111631[221]	R4122486	R4577452	R4577453
N/A	1-1/8 "	R4133719	R4133718	R4166926	NR	R4111634[53]	N/A	R4577452	R4577453
N/A	1-1/8 "	R4133716	R4133717	R4166926	NR	R4111772[53]	R4122488	R4577454	R4577455
23-122700-002[9]	2-1/2 "	R424244X	R424244X[37]	60050266	69270757[41]	R4111992[214]	R4122386	R4577452	R4577453
23-122691-002[188]	2-7/8 "	60050145X	60050145X[37]	60050146	69270702[41]	R4111992[214]	R4122386	R4577452	R4577453
23-122703-002[186]	2-7/8 "	60050145X	60050145X[37]	60050146	69270702[41]	R4111992[214]	R4122386	R4577452	R4577453
N/A	1-1/4 "	R4133720	R4133721	R4166923	NR	R4111630[222]	N/A	R4577452	R4577453
N/A	1-1/4 "	R4133581	R4133581	R4166923	NR	R4111992[214]	R4122386	R4577452	R4577453
N/A	1-1/2 "	R4033607	R4033607	R4166818	NR	-	-	R4577147	R4577147
N/A	1-5/8 "	R4133338	R4133338	R4166689	NR	-	-	R4577147	R4577147
N/A	1-5/8 "	R4133338	R4133338	R4166689	NR	-	-	R4577147	R4577147
N/A	1-3/4 "	R4133400	R4133400	R4166917	NR	-	-	R4577147	R4577147
N/A	1-5/8 "	201181	201182	SP7895S	NR	-	-	R4577147	R4577147
N/A	1-5/8 "	201185	201186[329]	SP7895S	NR	-	-	R4577147	R4577147
N/A	1-5/8 "	201185	201186[329]	SP7895S	NR	-	-	R4577147	R4577147
N/A	1-5/8 "	201181	201182	SP7895S	NR	-	-	R4577147	R4577147
N/A	1.09375	R4133484	R4133485	R4166819	NR	R4111629[53]	R4122484	R4577460	R4577460
N/A	1-1/8 "	R4133714	R4133715	R4166926	NR	R4111995[53]	-	R4577454	R4577455
N/A	1-1/8 "	R4133716	R4133717	R4166926	NR	R4111772[53]	R4122488	R4577454	R4577455
N/A	1-1/8 "	R4133714	R4133715	R4166926	NR	R4111631[221]	R4122486	R4577452	R4577453
N/A	1-1/8 "	R4133719	R4133718	R4166926	NR	R4111634[53]	N/A	R4577452	R4577453
23-122700-002[9]	2-1/2 "	R424244X	R424244X[37]	60050266	69270757[41]	R4111992[214]	R4122386	R4577452	R4577453
23-122703-002[186]	2-7/8 "	60050145X	60050145X[37]	60050146	69270702[41]	R4111992[214]	R4122386	R4577452	R4577453
23-122691-002[188]	2-7/8 "	60050145X	60050145X[37]	60050146	69270702[41]	R4111992[214]	R4122386	R4577452	R4577453
N/A	1-1/4 "	R4133581	R4133581	R4166923	NR	R4111992[214]	R4122386	R4577452	R4577453
N/A	1-1/4 "	R4133720	R4133721	R4166923	NR	R4111630[222]	N/A	R4577452	R4577453
N/A	1-1/2 "	R4033607	R4033607	R4166818	NR	-	-	R4577147	R4577147
N/A	1-5/8 "	R4133338	R4133338	R4166689	NR	-	-	R4577147	R4577147
N/A	1-5/8 "	R4133338	R4133338	R4166689	NR	-	-	R4577147	R4577147
N/A	1-3/4 "	R4133400	R4133400	R4166917	NR	-	-	R4577147	R4577147
N/A	1-5/8 "	201181	201182	SP7895S	NR	-	-	R4577147	R4577147
N/A	1-5/8 "	201185	201186[329]	SP7895S	NR	-	-	R4577147	R4577147
N/A	1-5/8 "	201181	201182	SP7895S	NR	-	-	R4577147	R4577147
N/A	1-5/8 "	201185	201186[329]	SP7895S	NR	-	-	R4577147	R4577147
N/A	1.09375	R4133484	R4133485	R4166819	NR	R4111629[53]	R4122484	R4577460	R4577460
N/A	1-1/8 "	R4133714	R4133715	R4166926	NR	R4111995[53]	-	R4577454	R4577455
N/A	1-1/8 "	R4133714	R4133715	R4166926	NR	R4111631[221]	R4122486	R4577452	R4577453
N/A	1-1/8 "	R4133719	R4133718	R4166926	NR	R4111634[53]	N/A	R4577452	R4577453

329 - Forward

340 - Use 69160457 for Disc Pad Retainer Clip

341 - Use 69160445 for Disc Pad Retainer Clip

MAKE MODEL YEAR AXLE CODE AXLE WEIGHT	AXLE & BRK. TYPE	BRK. MFG.	BRAKE SIZE	FMSI	MERITOR DISC PAD OR BRAKE SHOE	MERITOR GUIDE PIN OR RETURN SPRING KIT	MERITOR CALIPER HWD. KIT OR RETURN SPRING KIT	MERITOR ADJUSTER KIT (LEFT WHEEL)	MERITOR ADJUSTER KIT (RIGHT WHEEL)
FORD(Cont.)									
LT800 SERIES: LOUISVILLE CONVENTIONAL 106.4 BBC TANDEM CHASSIS CAB TRUCK(Cont.)									
1973									
	Fa	WG	15 " x 3 "	1245C - 321	R700321	R40H521	R40H9237	R40H3502	R40H3503
	Fd	DN		7141 - D224	MD224[340]	69310693	60050153	NR	NR
F080, F090	Fd	DN		7149 - D236	MD236[341]	69310693	R40H5523	NR	NR
	Fd	DN		7149 - D236	MD236[341]	69310693	R40H5523	NR	NR
F090, F120	Fa	WG	15 " x 3 "	1245C - 321	R700321	R40H521	R40H9237	R40H3502	R40H3503
	Fa	WG	15 " x 3 "	1245C - 321	R700321	R40H521	R40H9237	R40H3502	R40H3503
R170, R175	Ra	KH	15 " x 5 "	4646 - 400	R700400	R40H595	R40H9220	R40H3538	R40H3539
	Ra	WG	15 " x 5 "	1252 - 346	R700346	R40H597	R40H9200	R40H3540	R40H3541
R185	Ra	WG	15 " x 6 "	4596 - 381	R700381	R40H597	R40H9200	R40H3540	R40H3541
	Ra	WG	15 " x 7 "	4597 - 383	R700383	R40H597	R40H9200	R40H3540	R40H3541
LTS800 SERIES: LOUISVILLE 106.3 BBC TANDEM CHASSIS CAB, SET BACK FRONT AXLE TRUCK									
1992									
	Fd	DN		7149 - D236	MD236[341]	69310693	69310782	NR	NR
	Fd	DN		7149 - D236	MD236[341]	69310693	69310782	NR	NR
	Fd	DN		7149 - D236	MD236[341]	69310693	69310782	NR	NR
	Fd	DN		7141 - D224	MD224[340]	69310693	60050153	NR	NR
	Ra	LG	15 " x 7 "	4505A - 544	N/A	R40H618	NR	NR	NR
	Ra	LG	15 " x 7 "	4505A - 544	N/A	R40H618	NR	SP7887S	SP7887S
1991									
	Fd	DN		7141 - D224	MD224[340]	69310693	60050153	NR	NR
	Fd	DN		7149 - D236	MD236[341]	69310693	69310782	NR	NR
	Fd	DN		7149 - D236	MD236[341]	69310693	69310782	NR	NR
	Fd	DN		7149 - D236	MD236[341]	69310693	69310782	NR	NR
	Ra	LG	15 " x 7 "	4505A - 544	N/A	R40H618	NR	SP7887S	SP7887S
	Ra	LG	15 " x 7 "	4505A - 544	N/A	R40H618	NR	NR	NR
1990									
	Fd	DN		7149 - D236	MD236[341]	69310693	69310782	NR	NR
	Fd	DN		7149 - D236	MD236[341]	69310693	69310782	NR	NR
	Fd	DN		7141 - D224	MD224[340]	69310693	60050153	NR	NR
	Fd	DN		7149 - D236	MD236[341]	69310693	69310782	NR	NR
	Ra	LG	15 " x 7 "	4505A - 544	N/A	R40H618	NR	NR	NR
	Ra	LG	15 " x 7 "	4505A - 544	N/A	R40H618	NR	SP7887S	SP7887S
1989									
	Fd	DN		7141 - D224	MD224[340]	69310693	60050153	NR	NR
	Fd	DN		7149 - D236	MD236[341]	69310693	69310782[43]	NR	NR
	Fd	DN		7149 - D236	MD236[341]	69310693	69310782[43]	NR	NR
	Fd	DN		7149 - D236	MD236[341]	69310693	69310782[43]	NR	NR
	Ra	LG	15 " x 7 "	4505A - 544	N/A	R40H618	NR	SP7887S	SP7887S
	Ra	LG	15 " x 7 "	4505A - 544	N/A	R40H618	NR	NR	NR
1988									
	Fd	DN		7149 - D236	MD236[341]	69310693	69310782[43]	NR	NR
	Fd	DN		7141 - D224	MD224[340]	69310693	60050153	NR	NR
	Fd	DN		7149 - D236	MD236[341]	69310693	69310782[43]	NR	NR
	Fd	DN		7149 - D236	MD236[341]	69310693	69310782[43]	NR	NR
	Ra	LG	15 " x 7 "	4505A - 544	N/A	R40H618	NR	NR	NR
	Ra	LG	15 " x 7 "	4505A - 544	N/A	R40H618	NR	SP7887S	SP7887S
1987									
	Fd	DN		7141 - D224	MD224[340]	69310693	60050153	NR	NR
	Fd	DN		7149 - D236	MD236[341]	69310693	69310782[43]	NR	NR
	Fd	DN		7149 - D236	MD236[341]	69310693	69310782[43]	NR	NR
	Fd	DN		7149 - D236	MD236[341]	69310693	69310782[43]	NR	NR
	Ra	LG	15 " x 7 "	4505A - 544	N/A	R40H618	NR	SP7887S	SP7887S
	Ra	LG	15 " x 7 "	4505A - 544	N/A	R40H618	NR	NR	NR
1986									
	Fd	DN		7149 - D236	MD236[341]	69310693	69310782	NR	NR
	Fd	DN		7141 - D224	MD224[340]	69310693	60050153	NR	NR
	Fd	DN		7149 - D236	MD236[341]	69310693	69310782	NR	NR
	Fd	DN		7149 - D236	MD236[341]	69310693	69310782	NR	NR
	Ra	LG	15 " x 7 "	4505A - 544	N/A	R40H618	NR	NR	NR
	Ra	LG	15 " x 7 "	4505A - 544	N/A	R40H618	NR	SP7887S	SP7887S
1985									
	Fd	DN		7149 - D236	MD236[341]	69310693	R40H5523	NR	NR
	Fd	DN		7149 - D236	MD236[341]	69310693	R40H5523	NR	NR

9 - 6 Stud, Dayton Rotor, Hat Style
43 - For Applications Taking A Longer Shim, Use R404151706
187 - 6 Stud, 6.443" Hub
37 - Also available as a New unit
53 - Power Brakes
188 - 6 Stud, 9.251" Hub
41 - Aluminum piston
186 - 10 Stud
204 - Right Hand; use E-4057 for Left Hand Expander Kits

MERITOR DRUM OR ROTOR NO.	CALIPER OR CYLINDER BORE SIZE	MERITOR CALIPER OR WHEEL CYLINDER (LEFT)	MERITOR CALIPER OR WHEEL CYLINDER (RIGHT)	MERITOR CALIPER OR WHEEL CYLINDER REPAIR KIT	MERITOR CALIPER PISTON	MERITOR MASTER CYLINDER	MERITOR MASTER CYLINDER KIT	MERITOR BRAKE HOSE (LEFT)	MERITOR BRAKE HOSE (RIGHT)
									FORD(Cont.)
LT800 SERIES: LOUISVILLE CONVENTIONAL 106.4 BBC TANDEM CHASSIS CAB TRUCK(Cont.)									
N/A	1-1/8 "	R4133716	R4133717	R4166926	NR	R4111772[53]	R4122488	R4577454	R4577455
23-122700-002[9]	2-1/2 "	R424244X	R424244X[37]	60050266	69270757[41]	R4111992[214]	R4122386	R4577452	R4577453
23-122691-002[188]	2-7/8 "	60050145X	60050145X[37]	60050146	69270702[41]	R4111992[214]	R4122386	R4577452	R4577453
23-122703-002[186]	2-7/8 "	60050145X	60050145X[37]	60050146	69270702[41]	R4111992[214]	R4122386	R4577452	R4577453
N/A	1-1/4 "	R4133581	R4133581	R4166923	NR	R4111992[214]	R4122386	R4577452	R4577453
N/A	1-1/4 "	R4133720	R4133721	R4166923	NR	R4111630[222]	N/A	R4577452	R4577453
N/A	1-1/2 "	R4033607	R4033607	R4166818	NR	-	-	R4577147	R4577147
N/A	1-5/8 "	R4133338	R4133338	R4166689	NR	-	-	R4577147	R4577147
N/A	1-5/8 "	R4133338	R4133338	R4166689	NR	-	-	R4577147	R4577147
N/A	1-3/4 "	R4133400	R4133400	R4166917	NR	-	-	R4577147	R4577147
LTS800 SERIES: LOUISVILLE 106.3 BBC TANDEM CHASSIS CAB, SET BACK FRONT AXLE TRUCK									
23-122691-002[188]	2-7/8 "	60050145X	60050145X[37]	60050146	69270702[41]	R4111995[53]	-	R4577454	R4577455
23-122703-002[186]	2-7/8 "	60050145X	60050145X[37]	60050146	69270702[41]	R4111995[53]	-	R4577454	R4577455
23-122743-002[187]	2-7/8 "	60050145X	60050145X[37]	60050146	69270702[41]	R4111995[53]	-	R4577454	R4577455
23-122700-002[9]	2-1/2 "	R424244X	R424244X[37]	60050266	69270757[41]	R4111995[53]	-	R4577454	R4577455
N/A	1-3/4 "	201179X	201180X	SP7873S	SP7880S[204]	-	-	R4577870	R4577870
N/A	1-3/4 "	201183X	201184X[329]	SP7873S	NR	-	-	R4577870	R4577870
23-122700-002[9]	2-1/2 "	R424244X	R424244X[37]	60050266	69270757[41]	R4111995[53]	-	R4577454	R4577455
23-122691-002[188]	2-7/8 "	60050145X	60050145X[37]	60050146	69270702[41]	R4111995[53]	-	R4577454	R4577455
23-122703-002[186]	2-7/8 "	60050145X	60050145X[37]	60050146	69270702[41]	R4111995[53]	-	R4577454	R4577455
23-122743-002[187]	2-7/8 "	60050145X	60050145X[37]	60050146	69270702[41]	R4111995[53]	-	R4577454	R4577455
N/A	1-3/4 "	201183X	201184X[329]	SP7873S	NR	-	-	R4577870	R4577870
N/A	1-3/4 "	201179X	201180X	SP7873S	SP7880S[204]	-	-	R4577870	R4577870
23-122743-002[187]	2-7/8 "	60050145X	60050145X[37]	60050146	69270702[41]	R4111995[53]	-	R4577454	R4577455
23-122691-002[188]	2-7/8 "	60050145X	60050145X[37]	60050146	69270702[41]	R4111995[53]	-	R4577454	R4577455
23-122700-002[9]	2-1/2 "	R424244X	R424244X[37]	60050266	69270757[41]	R4111995[53]	-	R4577454	R4577455
23-122703-002[186]	2-7/8 "	60050145X	60050145X[37]	60050146	69270702[41]	R4111995[53]	-	R4577454	R4577455
N/A	1-3/4 "	201179X	201180X	SP7873S	SP7880S[204]	-	-	R4577870	R4577870
N/A	1-3/4 "	201183X	201184X[329]	SP7873S	NR	-	-	R4577870	R4577870
23-122700-002[9]	2-1/2 "	R424244X	R424244X[37]	60050266	69270757[41]	R4111995[53]	-	R4577454	R4577455
23-122691-002[188]	2-7/8 "	60050145X	60050145X[37]	60050146	69270702[41]	R4111995[53]	-	R4577454	R4577455
23-122743-002[187]	2-7/8 "	60050145X	60050145X[37]	60050146	69270702[41]	R4111995[53]	-	R4577454	R4577455
23-122703-002[186]	2-7/8 "	60050145X	60050145X[37]	60050146	69270702[41]	R4111995[53]	-	R4577454	R4577455
N/A	1-3/4 "	201183X	201184X[329]	SP7873S	NR	-	-	N/A	N/A
N/A	1-3/4 "	201179X	201180X	SP7873S	SP7880S[204]	-	-	N/A	N/A
23-122691-002[188]	2-7/8 "	60050145X	60050145X[37]	60050146	69270702[41]	R4111995[53]	-	R4577454	R4577455
23-122700-002[9]	2-1/2 "	R424244X	R424244X[37]	60050266	69270757[41]	R4111995[53]	-	R4577454	R4577455
23-122703-002[186]	2-7/8 "	60050145X	60050145X[37]	60050146	69270702[41]	R4111995[53]	-	R4577454	R4577455
23-122743-002[187]	2-7/8 "	60050145X	60050145X[37]	60050146	69270702[41]	R4111995[53]	-	R4577454	R4577455
N/A	1-3/4 "	201179X	201180X	SP7873S	SP7880S[204]	-	-	N/A	N/A
N/A	1-3/4 "	201183X	201184X[329]	SP7873S	NR	-	-	N/A	N/A
23-122700-002[9]	2-1/2 "	R424244X	R424244X[37]	60050266	69270757[41]	R4111995[53]	-	R4577454	R4577455
23-122743-002[187]	2-7/8 "	60050145X	60050145X[37]	60050146	69270702[41]	R4111995[53]	-	R4577454	R4577455
23-122703-002[186]	2-7/8 "	60050145X	60050145X[37]	60050146	69270702[41]	R4111995[53]	-	R4577454	R4577455
23-122691-002[188]	2-7/8 "	60050145X	60050145X[37]	60050146	69270702[41]	R4111995[53]	-	R4577454	R4577455
N/A	1-3/4 "	201183X	201184X[329]	SP7873S	NR	-	-	N/A	N/A
N/A	1-3/4 "	201179X	201180X	SP7873S	SP7880S[204]	-	-	N/A	N/A
23-122691-002[188]	2-7/8 "	60050145X	60050145X[37]	60050146	69270702[41]	R4111995[53]	-	R4577454	R4577455
23-122700-002[9]	2-1/2 "	R424244X	R424244X[37]	60050266	69270757[41]	R4111995[53]	-	R4577454	R4577455
23-122743-002[187]	2-7/8 "	60050145X	60050145X[37]	60050146	69270702[41]	R4111995[53]	-	R4577454	R4577455
23-122703-002[186]	2-7/8 "	60050145X	60050145X[37]	60050146	69270702[41]	R4111995[53]	-	R4577454	R4577455
N/A	1-3/4 "	201179X	201180X	SP7873S	SP7880S[204]	-	-	N/A	N/A
N/A	1-3/4 "	201183X	201184X[329]	SP7873S	NR	-	-	N/A	N/A
23-122703-002[186]	2-7/8 "	60050145X	60050145X[37]	60050146	69270702[41]	R4111995[53]	-	R4577454	R4577455
23-122743-002[187]	2-7/8 "	60050145X	60050145X[37]	60050146	69270702[41]	R4111995[53]	-	R4577454	R4577455

214 - Power Brakes, Split System
222 - Power Brakes, 18,500 or 22,000 lb. Rear Axle
329 - Forward
340 - Use 69160457 for Disc Pad Retainer Clip
341 - Use 69160445 for Disc Pad Retainer Clip

MAKE MODEL YEAR AXLE CODE AXLE WEIGHT	AXLE & BRK. TYPE	BRK. MFG.	BRAKE SIZE	FMSI	MERITOR DISC PAD OR BRAKE SHOE	MERITOR GUIDE PIN OR RETURN SPRING KIT	MERITOR CALIPER HWD. KIT OR RETURN SPRING KIT	MERITOR ADJUSTER KIT (LEFT WHEEL)	MERITOR ADJUSTER KIT (RIGHT WHEEL)
FORD(Cont.)									
LTS800 SERIES: LOUISVILLE 106.3 BBC TANDEM CHASSIS CAB, SET BACK FRONT AXLE TRUCK(Cont.)									
1985									
	Fd	DN		7149 - D236	MD236[341]	69310693	R40H5523	NR	NR
	Fd	DN		7141 - D224	MD224[340]	69310693	60050153	NR	NR
	Ra	LG	15 " x 7 "	4505A - 544	N/A	R40H618	NR	NR	NR
	Ra	LG	15 " x 7 "	4505A - 544	N/A	R40H618	NR	SP7887S	SP7887S
1984									
	Fd	DN		7141 - D224	MD224[340]	69310693	60050153	NR	NR
	Fd	DN		7149 - D236	MD236[341]	69310693	R40H5523	NR	NR
	Fd	DN		7149 - D236	MD236[341]	69310693	R40H5523	NR	NR
	Fd	DN		7149 - D236	MD236[341]	69310693	R40H5523	NR	NR
	Ra	LG	15 " x 7 "	4505A - 544	N/A	R40H618	NR	SP7887S	SP7887S
	Ra	LG	15 " x 7 "	4505A - 544	N/A	R40H618	NR	NR	NR
1983									
	Ra	LG	15 " x 6 "	4504A - 543	N/A	R40H618	NR	NR	NR
	Ra	LG	15 " x 6 "	4504A - 543	N/A	R40H618	NR	SP7888S	SP7888S
	Ra	LG	15 " x 7 "	4505A - 544	N/A	R40H618	NR	NR	NR
	Ra	LG	15 " x 7 "	4505A - 544	N/A	R40H618	NR	SP7888S	SP7888S
F050, F055, F060	Fa	KH	14 " x 2-1/2 "	2060 - 361	Discontinued	R40H596	R40H9219	R40H3536	R40H3537
F070	Fa	WG	15 " x 3 "	1245C - 321	R700321	R40H521	R40H9237	R40H3502	R40H3503
	Fa	WG	15 " x 3 "	1245C - 321	R700321	R40H521	R40H9237	R40H3502	R40H3503
	Fa	WG	15 " x 3 "	1245C - 321	R700321	R40H521	R40H9237	R40H3502	R40H3503
	Fa	WG	15 " x 3 "	1245C - 321	R700321	R40H521	R40H9237	R40H3502	R40H3503
	Fd	DN		7141 - D224	MD224[340]	69310693	60050153	NR	NR
F080, F090	Fd	DN		7149 - D236	MD236[341]	69310693	R40H5523	NR	NR
	Fd	DN		7149 - D236	MD236[341]	69310693	R40H5523	NR	NR
F090, F120	Fa	WG	15 " x 3 "	1245C - 321	R700321	R40H521	R40H9237	R40H3502	R40H3503
	Fa	WG	15 " x 3 "	1245C - 321	R700321	R40H521	R40H9237	R40H3502	R40H3503
R170, R175	Ra	KH	15 " x 5 "	4646 - 400	R700400	R40H595	R40H9220	R40H3538	R40H3539
	Ra	WG	15 " x 5 "	1252 - 346	R700346	R40H597	R40H9200	R40H3540	R40H3541
R185	Ra	WG	15 " x 6 "	4596 - 381	R700381	R40H597	R40H9200	R40H3540	R40H3541
	Ra	WG	15 " x 7 "	4597 - 383	R700383	R40H597	R40H9200	R40H3540	R40H3541
1982									
	Ra	LG	15 " x 6 "	4504A - 543	N/A	R40H618	NR	NR	NR
	Ra	LG	15 " x 6 "	4504A - 543	N/A	R40H618	NR	SP7888S	SP7888S
	Ra	LG	15 " x 7 "	4505A - 544	N/A	R40H618	NR	SP7888S	SP7888S
	Ra	LG	15 " x 7 "	4505A - 544	N/A	R40H618	NR	NR	NR
F050, F055, F060	Fa	KH	14 " x 2-1/2 "	2060 - 361	Discontinued	R40H596	R40H9219	R40H3536	R40H3537
F070	Fa	WG	15 " x 3 "	1245C - 321	R700321	R40H521	R40H9237	R40H3502	R40H3503
	Fa	WG	15 " x 3 "	1245C - 321	R700321	R40H521	R40H9237	R40H3502	R40H3503
	Fa	WG	15 " x 3 "	1245C - 321	R700321	R40H521	R40H9237	R40H3502	R40H3503
	Fa	WG	15 " x 3 "	1245C - 321	R700321	R40H521	R40H9237	R40H3502	R40H3503
	Fd	DN		7141 - D224	MD224[340]	69310693	60050153	NR	NR
F080, F090	Fd	DN		7149 - D236	MD236[341]	69310693	R40H5523	NR	NR
	Fd	DN		7149 - D236	MD236[341]	69310693	R40H5523	NR	NR
F090, F120	Fa	WG	15 " x 3 "	1245C - 321	R700321	R40H521	R40H9237	R40H3502	R40H3503
	Fa	WG	15 " x 3 "	1245C - 321	R700321	R40H521	R40H9237	R40H3502	R40H3503
R170, R175	Ra	KH	15 " x 5 "	4646 - 400	R700400	R40H595	R40H9220	R40H3538	R40H3539
	Ra	WG	15 " x 5 "	1252 - 346	R700346	R40H597	R40H9200	R40H3540	R40H3541
R185	Ra	WG	15 " x 6 "	4596 - 381	R700381	R40H597	R40H9200	R40H3540	R40H3541
	Ra	WG	15 " x 7 "	4597 - 383	R700383	R40H597	R40H9200	R40H3540	R40H3541
1981									
	Ra	LG	15 " x 6 "	4504A - 543	N/A	R40H618	NR	NR	NR
	Ra	LG	15 " x 6 "	4504A - 543	N/A	R40H618	NR	SP7888S	SP7888S
	Ra	LG	15 " x 7 "	4505A - 544	N/A	R40H618	NR	SP7888S	SP7888S
	Ra	LG	15 " x 7 "	4505A - 544	N/A	R40H618	NR	NR	NR
F050, F055, F060	Fa	KH	14 " x 2-1/2 "	2060 - 361	Discontinued	R40H596	R40H9219	R40H3536	R40H3537
F070	Fa	WG	15 " x 3 "	1245C - 321	R700321	R40H521	R40H9237	R40H3502	R40H3503
	Fa	WG	15 " x 3 "	1245C - 321	R700321	R40H521	R40H9237	R40H3502	R40H3503
	Fa	WG	15 " x 3 "	1245C - 321	R700321	R40H521	R40H9237	R40H3502	R40H3503
	Fa	WG	15 " x 3 "	1245C - 321	R700321	R40H521	R40H9237	R40H3502	R40H3503
	Fd	DN		7141 - D224	MD224[340]	69310693	60050153	NR	NR
F080, F090	Fd	DN		7149 - D236	MD236[341]	69310693	R40H5523	NR	NR
	Fd	DN		7149 - D236	MD236[341]	69310693	R40H5523	NR	NR

9 - 6 Stud, Dayton Rotor, Hat Style
53 - Power Brakes
188 - 6 Stud, 9.251" Hub

37 - Also available as a New unit
186 - 10 Stud
204 - Right Hand; use E-4057 for Left Hand Expander Kits

41 - Aluminum piston
187 - 6 Stud, 6.443" Hub
214 - Power Brakes, Split System

MERITOR DRUM OR ROTOR NO.	CALIPER OR CYLINDER BORE SIZE	MERITOR CALIPER OR WHEEL CYLINDER (LEFT)	MERITOR CALIPER OR WHEEL CYLINDER (RIGHT)	MERITOR CALIPER OR WHEEL CYLINDER REPAIR KIT	MERITOR CALIPER PISTON	MERITOR MASTER CYLINDER	MERITOR MASTER CYLINDER KIT	MERITOR BRAKE HOSE (LEFT)	MERITOR BRAKE HOSE (RIGHT)
									FORD(Cont.)
LTS800 SERIES: LOUISVILLE 106.3 BBC TANDEM CHASSIS CAB, SET BACK FRONT AXLE TRUCK(Cont.)									
23-122691-002[188]	2-7/8 "	60050145X	60050145X[37]	60050146	69270702[41]	R4111995[53]	-	R4577454	R4577455
23-122700-002[9]	2-1/2 "	R424244X	R424244X[37]	60050266	69270757[41]	R4111995[53]	-	R4577454	R4577455
N/A	1-3/4 "	201179X	201180X	SP7873S	SP7880S[204]	-	-	N/A	N/A
N/A	1-3/4 "	201183X	201184X[329]	SP7873S	NR	-	-	N/A	N/A
23-122700-002[9]	2-1/2 "	R424244X	R424244X[37]	60050266	69270757[41]	R4111995[53]	-	R4577454	R4577455
23-122691-002[188]	2-7/8 "	60050145X	60050145X[37]	60050146	69270702[41]	R4111995[53]	-	R4577454	R4577455
23-122743-002[187]	2-7/8 "	60050145X	60050145X[37]	60050146	69270702[41]	R4111995[53]	-	R4577454	R4577455
23-122703-002[186]	2-7/8 "	60050145X	60050145X[37]	60050146	69270702[41]	R4111995[53]	-	R4577454	R4577455
N/A	1-3/4 "	201183X	201184X[329]	SP7873S	NR	-	-	N/A	N/A
N/A	1-3/4 "	201179X	201180X	SP7873S	SP7880S[204]	-	-	N/A	N/A
N/A	1-5/8 "	201181	201182	SP7895S	NR	-	-	R4577147	R4577147
N/A	1-5/8 "	201185	201186[329]	SP7895S	NR	-	-	R4577147	R4577147
N/A	1-5/8 "	201181	201182	SP7895S	NR	-	-	R4577147	R4577147
N/A	1-5/8 "	201185	201186[329]	SP7895S	NR	-	-	R4577147	R4577147
N/A	1.09375	R4133484	R4133485	R4166819	NR	R4111629[53]	R4122484	R4577460	R4577460
N/A	1-1/8 "	R4133714	R4133715	R4166926	NR	R4111995[53]	-	R4577454	R4577455
N/A	1-1/8 "	R4133719	R4133718	R4166926	NR	R4111634[53]	N/A	R4577452	R4577453
N/A	1-1/8 "	R4133716	R4133717	R4166926	NR	R4111772[53]	R4122488	R4577454	R4577455
N/A	1-1/8 "	R4133714	R4133715	R4166926	NR	R4111631[221]	R4122486	R4577452	R4577453
23-122700-002[9]	2-1/2 "	R424244X	R424244X[37]	60050266	69270757[41]	R4111992[214]	R4122386	R4577452	R4577453
23-122691-002[188]	2-7/8 "	60050145X	60050145X[37]	60050146	69270702[41]	R4111992[214]	R4122386	R4577452	R4577453
23-122703-002[186]	2-7/8 "	60050145X	60050145X[37]	60050146	69270702[41]	R4111992[214]	R4122386	R4577452	R4577453
N/A	1-1/4 "	R4133581	R4133581	R4166923	NR	R4111992[214]	R4122386	R4577452	R4577453
N/A	1-1/4 "	R4133720	R4133721	R4166923	NR	R4111630[222]	N/A	R4577452	R4577453
N/A	1-1/2 "	R4033607	R4033607	R4166818	NR	-	-	R4577147	R4577147
N/A	1-5/8 "	R4133338	R4133338	R4166689	NR	-	-	R4577147	R4577147
N/A	1-5/8 "	R4133338	R4133338	R4166689	NR	-	-	R4577147	R4577147
N/A	1-3/4 "	R4133400	R4133400	R4166917	NR	-	-	R4577147	R4577147
N/A	1-5/8 "	201181	201182	SP7895S	NR	-	-	R4577147	R4577147
N/A	1-5/8 "	201185	201186[329]	SP7895S	NR	-	-	R4577147	R4577147
N/A	1-5/8 "	201185	201186[329]	SP7895S	NR	-	-	R4577147	R4577147
N/A	1-5/8 "	201181	201182	SP7895S	NR	-	-	R4577147	R4577147
N/A	1.09375	R4133484	R4133485	R4166819	NR	R4111629[53]	R4122484	R4577460	R4577460
N/A	1-1/8 "	R4133714	R4133715	R4166926	NR	R4111995[53]	-	R4577454	R4577455
N/A	1-1/8 "	R4133716	R4133717	R4166926	NR	R4111772[53]	R4122488	R4577454	R4577455
N/A	1-1/8 "	R4133714	R4133715	R4166926	NR	R4111631[221]	R4122486	R4577452	R4577453
N/A	1-1/8 "	R4133719	R4133718	R4166926	NR	R4111634[53]	N/A	R4577452	R4577453
23-122700-002[9]	2-1/2 "	R424244X	R424244X[37]	60050266	69270757[41]	R4111992[214]	R4122386	R4577452	R4577453
23-122703-002[186]	2-7/8 "	60050145X	60050145X[37]	60050146	69270702[41]	R4111992[214]	R4122386	R4577452	R4577453
23-122691-002[188]	2-7/8 "	60050145X	60050145X[37]	60050146	69270702[41]	R4111992[214]	R4122386	R4577452	R4577453
N/A	1-1/4 "	R4133581	R4133581	R4166923	NR	R4111992[214]	R4122386	R4577452	R4577453
N/A	1-1/4 "	R4133720	R4133721	R4166923	NR	R4111630[222]	N/A	R4577452	R4577453
N/A	1-1/2 "	R4033607	R4033607	R4166818	NR	-	-	R4577147	R4577147
N/A	1-5/8 "	R4133338	R4133338	R4166689	NR	-	-	R4577147	R4577147
N/A	1-5/8 "	R4133338	R4133338	R4166689	NR	-	-	R4577147	R4577147
N/A	1-3/4 "	R4133400	R4133400	R4166917	NR	-	-	R4577147	R4577147
N/A	1-5/8 "	201181	201182	SP7895S	NR	-	-	R4577147	R4577147
N/A	1-5/8 "	201185	201186[329]	SP7895S	NR	-	-	R4577147	R4577147
N/A	1-5/8 "	201185	201186[329]	SP7895S	NR	-	-	R4577147	R4577147
N/A	1-5/8 "	201181	201182	SP7895S	NR	-	-	R4577147	R4577147
N/A	1.09375	R4133484	R4133485	R4166819	NR	R4111629[53]	R4122484	R4577460	R4577460
N/A	1-1/8 "	R4133714	R4133715	R4166926	NR	R4111995[53]	-	R4577454	R4577455
N/A	1-1/8 "	R4133714	R4133715	R4166926	NR	R4111631[221]	R4122486	R4577452	R4577453
N/A	1-1/8 "	R4133719	R4133718	R4166926	NR	R4111634[53]	N/A	R4577452	R4577453
N/A	1-1/8 "	R4133716	R4133717	R4166926	NR	R4111772[53]	R4122488	R4577454	R4577455
23-122700-002[9]	2-1/2 "	R424244X	R424244X[37]	60050266	69270757[41]	R4111992[214]	R4122386	R4577452	R4577453
23-122703-002[186]	2-7/8 "	60050145X	60050145X[37]	60050146	69270702[41]	R4111992[214]	R4122386	R4577452	R4577453
23-122691-002[188]	2-7/8 "	60050145X	60050145X[37]	60050146	69270702[41]	R4111992[214]	R4122386	R4577452	R4577453

221 - Power Brakes, 17,500 or 18,500 lb. Rear Axle
222 - Power Brakes, 18,500 or 22,000 lb. Rear Axle
329 - Forward
340 - Use 69160457 for Disc Pad Retainer Clip
341 - Use 69160445 for Disc Pad Retainer Clip

MAKE MODEL YEAR AXLE CODE AXLE WEIGHT	AXLE & BRK. TYPE	BRK. MFG.	BRAKE SIZE	FMSI	MERITOR DISC PAD OR BRAKE SHOE	MERITOR GUIDE PIN OR RETURN SPRING KIT	MERITOR CALIPER HWD. KIT OR RETURN SPRING KIT	MERITOR ADJUSTER KIT (LEFT WHEEL)	MERITOR ADJUSTER KIT (RIGHT WHEEL)
FORD(Cont.)									
LTS800 SERIES: LOUISVILLE 106.3 BBC TANDEM CHASSIS CAB, SET BACK FRONT AXLE TRUCK(Cont.)									
1981									
F090, F120	Fa	WG	15 " x 3 "	1245C - 321	R700321	R40H521	R40H9237	R40H3502	R40H3503
	Fa	WG	15 " x 3 "	1245C - 321	R700321	R40H521	R40H9237	R40H3502	R40H3503
R170, R175	Ra	KH	15 " x 5 "	4646 - 400	R700400	R40H595	R40H9220	R40H3538	R40H3539
	Ra	WG	15 " x 5 "	1252 - 346	R700346	R40H597	R40H9200	R40H3540	R40H3541
R185	Ra	WG	15 " x 6 "	4596 - 381	R700381	R40H597	R40H9200	R40H3540	R40H3541
	Ra	WG	15 " x 7 "	4597 - 383	R700383	R40H597	R40H9200	R40H3540	R40H3541
1980									
	Ra	LG	15 " x 6 "	4504A - 543	N/A	R40H618	NR	SP7888S	SP7888S
	Ra	LG	15 " x 6 "	4504A - 543	N/A	R40H618	NR	NR	NR
	Ra	LG	15 " x 7 "	4505A - 544	N/A	R40H618	NR	SP7888S	SP7888S
	Ra	LG	15 " x 7 "	4505A - 544	N/A	R40H618	NR	NR	NR
F050, F055, F060	Fa	KH	14 " x 2-1/2 "	2060 - 361	Discontinued	R40H596	R40H9219	R40H3536	R40H3537
F070	Fa	WG	15 " x 3 "	1245C - 321	R700321	R40H521	R40H9237	R40H3502	R40H3503
	Fa	WG	15 " x 3 "	1245C - 321	R700321	R40H521	R40H9237	R40H3502	R40H3503
	Fa	WG	15 " x 3 "	1245C - 321	R700321	R40H521	R40H9237	R40H3502	R40H3503
	Fa	WG	15 " x 3 "	1245C - 321	R700321	R40H521	R40H9237	R40H3502	R40H3503
	Fd	DN		7141 - D224	MD224[340]	69310693	60050153	NR	NR
F080, F090	Fd	DN		7149 - D236	MD236[341]	69310693	R40H5523	NR	NR
	Fd	DN		7149 - D236	MD236[341]	69310693	R40H5523	NR	NR
F090, F120	Fa	WG	15 " x 3 "	1245C - 321	R700321	R40H521	R40H9237	R40H3502	R40H3503
	Fa	WG	15 " x 3 "	1245C - 321	R700321	R40H521	R40H9237	R40H3502	R40H3503
R170, R175	Ra	KH	15 " x 5 "	4646 - 400	R700400	R40H595	R40H9220	R40H3538	R40H3539
	Ra	WG	15 " x 5 "	1252 - 346	R700346	R40H597	R40H9200	R40H3540	R40H3541
R185	Ra	WG	15 " x 6 "	4596 - 381	R700381	R40H597	R40H9200	R40H3540	R40H3541
	Ra	WG	15 " x 7 "	4597 - 383	R700383	R40H597	R40H9200	R40H3540	R40H3541
1979									
	Ra	LG	15 " x 6 "	4504A - 543	N/A	R40H618	NR	NR	NR
	Ra	LG	15 " x 6 "	4504A - 543	N/A	R40H618	NR	SP7888S	SP7888S
	Ra	LG	15 " x 7 "	4505A - 544	N/A	R40H618	NR	SP7888S	SP7888S
	Ra	LG	15 " x 7 "	4505A - 544	N/A	R40H618	NR	NR	NR
F050, F055, F060	Fa	KH	14 " x 2-1/2 "	2060 - 361	Discontinued	R40H596	R40H9219	R40H3536	R40H3537
F070	Fa	WG	15 " x 3 "	1245C - 321	R700321	R40H521	R40H9237	R40H3502	R40H3503
	Fa	WG	15 " x 3 "	1245C - 321	R700321	R40H521	R40H9237	R40H3502	R40H3503
	Fa	WG	15 " x 3 "	1245C - 321	R700321	R40H521	R40H9237	R40H3502	R40H3503
	Fa	WG	15 " x 3 "	1245C - 321	R700321	R40H521	R40H9237	R40H3502	R40H3503
	Fd	DN		7141 - D224	MD224[340]	69310693	60050153	NR	NR
F080, F090	Fd	DN		7149 - D236	MD236[341]	69310693	R40H5523	NR	NR
	Fd	DN		7149 - D236	MD236[341]	69310693	R40H5523	NR	NR
F090, F120	Fa	WG	15 " x 3 "	1245C - 321	R700321	R40H521	R40H9237	R40H3502	R40H3503
	Fa	WG	15 " x 3 "	1245C - 321	R700321	R40H521	R40H9237	R40H3502	R40H3503
R170, R175	Ra	KH	15 " x 5 "	4646 - 400	R700400	R40H595	R40H9220	R40H3538	R40H3539
	Ra	WG	15 " x 5 "	1252 - 346	R700346	R40H597	R40H9200	R40H3540	R40H3541
R185	Ra	WG	15 " x 6 "	4596 - 381	R700381	R40H597	R40H9200	R40H3540	R40H3541
	Ra	WG	15 " x 7 "	4597 - 383	R700383	R40H597	R40H9200	R40H3540	R40H3541
1978									
	Ra	LG	15 " x 6 "	4504A - 543	N/A	R40H618	NR	SP7888S	SP7888S
	Ra	LG	15 " x 6 "	4504A - 543	N/A	R40H618	NR	NR	NR
	Ra	LG	15 " x 7 "	4505A - 544	N/A	R40H618	NR	NR	NR
	Ra	LG	15 " x 7 "	4505A - 544	N/A	R40H618	NR	SP7888S	SP7888S
F050, F055, F060	Fa	KH	14 " x 2-1/2 "	2060 - 361	Discontinued	R40H596	R40H9219	R40H3536	R40H3537
F070	Fa	WG	15 " x 3 "	1245C - 321	R700321	R40H521	R40H9237	R40H3502	R40H3503
	Fa	WG	15 " x 3 "	1245C - 321	R700321	R40H521	R40H9237	R40H3502	R40H3503
	Fa	WG	15 " x 3 "	1245C - 321	R700321	R40H521	R40H9237	R40H3502	R40H3503
	Fa	WG	15 " x 3 "	1245C - 321	R700321	R40H521	R40H9237	R40H3502	R40H3503
	Fd	DN		7141 - D224	MD224[340]	69310693	60050153	NR	NR
F080, F090	Fd	DN		7149 - D236	MD236[341]	69310693	R40H5523	NR	NR
	Fd	DN		7149 - D236	MD236[341]	69310693	R40H5523	NR	NR
F090, F120	Fa	WG	15 " x 3 "	1245C - 321	R700321	R40H521	R40H9237	R40H3502	R40H3503
	Fa	WG	15 " x 3 "	1245C - 321	R700321	R40H521	R40H9237	R40H3502	R40H3503
R170, R175	Ra	KH	15 " x 5 "	4646 - 400	R700400	R40H595	R40H9220	R40H3538	R40H3539
	Ra	WG	15 " x 5 "	1252 - 346	R700346	R40H597	R40H9200	R40H3540	R40H3541
R185	Ra	WG	15 " x 6 "	4596 - 381	R700381	R40H597	R40H9200	R40H3540	R40H3541

9 - 6 Stud, Dayton Rotor, Hat Style
53 - Power Brakes
214 - Power Brakes, Split System
37 - Also available as a New unit
186 - 10 Stud
221 - Power Brakes, 17,500 or 18,500 lb. Rear Axle
41 - Aluminum piston
188 - 6 Stud, 9.251" Hub
222 - Power Brakes, 18,500 or 22,000 lb. Rear Axle

MERITOR DRUM OR ROTOR NO.	CALIPER OR CYLINDER BORE SIZE	MERITOR CALIPER OR WHEEL CYLINDER (LEFT)	MERITOR CALIPER OR WHEEL CYLINDER (RIGHT)	MERITOR CALIPER OR WHEEL CYLINDER REPAIR KIT	MERITOR CALIPER PISTON	MERITOR MASTER CYLINDER	MERITOR MASTER CYLINDER KIT	MERITOR BRAKE HOSE (LEFT)	MERITOR BRAKE HOSE (RIGHT)
									FORD(Cont.)
LTS800 SERIES: LOUISVILLE 106.3 BBC TANDEM CHASSIS CAB, SET BACK FRONT AXLE TRUCK(Cont.)									
N/A	1-1/4 "	R4133720	R4133721	R4166923	NR	R4111630[222]	N/A	R4577452	R4577453
N/A	1-1/4 "	R4133581	R4133581	R4166923	NR	R4111992[214]	R4122386	R4577452	R4577453
N/A	1-1/2 "	R4033607	R4033607	R4166818	NR	-	-	R4577147	R4577147
N/A	1-5/8 "	R4133338	R4133338	R4166689	NR	-	-	R4577147	R4577147
N/A	1-5/8 "	R4133338	R4133338	R4166689	NR	-	-	R4577147	R4577147
N/A	1-3/4 "	R4133400	R4133400	R4166917	NR	-	-	R4577147	R4577147
N/A	1-5/8 "	201185	201186[329]	SP7895S	NR	-	-	R4577147	R4577147
N/A	1-5/8 "	201181	201182	SP7895S	NR	-	-	R4577147	R4577147
N/A	1-5/8 "	201185	201186[329]	SP7895S	NR	-	-	R4577147	R4577147
N/A	1-5/8 "	201181	201182	SP7895S	NR	-	-	R4577147	R4577147
N/A	1.09375	R4133484	R4133485	R4166819	NR	R4111629[53]	R4122484	R4577460	R4577460
N/A	1-1/8 "	R4133716	R4133717	R4166926	NR	R4111772[53]	R4122488	R4577454	R4577455
N/A	1-1/8 "	R4133714	R4133715	R4166926	NR	R4111995[53]	-	R4577454	R4577455
N/A	1-1/8 "	R4133714	R4133715	R4166926	NR	R4111631[221]	R4122486	R4577452	R4577453
N/A	1-1/8 "	R4133719	R4133718	R4166926	NR	R4111634[53]	N/A	R4577452	R4577453
23-122700-002[9]	2-1/2 "	R424244X	R424244X[37]	60050266	69270757[41]	R4111992[214]	R4122386	R4577452	R4577453
23-122703-002[186]	2-7/8 "	60050145X	60050145X[37]	60050146	69270702[41]	R4111992[214]	R4122386	R4577452	R4577453
23-122691-002[188]	2-7/8 "	60050145X	60050145X[37]	60050146	69270702[41]	R4111992[214]	R4122386	R4577452	R4577453
N/A	1-1/4 "	R4133720	R4133721	R4166923	NR	R4111630[222]	N/A	R4577452	R4577453
N/A	1-1/4 "	R4133581	R4133581	R4166923	NR	R4111992[214]	R4122386	R4577452	R4577453
N/A	1-1/2 "	R4033607	R4033607	R4166818	NR	-	-	R4577147	R4577147
N/A	1-5/8 "	R4133338	R4133338	R4166689	NR	-	-	R4577147	R4577147
N/A	1-5/8 "	R4133338	R4133338	R4166689	NR	-	-	R4577147	R4577147
N/A	1-3/4 "	R4133400	R4133400	R4166917	NR	-	-	R4577147	R4577147
N/A	1-5/8 "	201181	201182	SP7895S	NR	-	-	R4577147	R4577147
N/A	1-5/8 "	201185	201186[329]	SP7895S	NR	-	-	R4577147	R4577147
N/A	1-5/8 "	201185	201186[329]	SP7895S	NR	-	-	R4577147	R4577147
N/A	1-5/8 "	201181	201182	SP7895S	NR	-	-	R4577147	R4577147
N/A	1.09375	R4133484	R4133485	R4166819	NR	R4111629[53]	R4122484	R4577460	R4577460
N/A	1-1/8 "	R4133714	R4133715	R4166926	NR	R4111995[53]	-	R4577454	R4577455
N/A	1-1/8 "	R4133716	R4133717	R4166926	NR	R4111772[53]	R4122488	R4577454	R4577455
N/A	1-1/8 "	R4133719	R4133718	R4166926	NR	R4111634[53]	N/A	R4577452	R4577453
N/A	1-1/8 "	R4133714	R4133715	R4166926	NR	R4111631[221]	R4122486	R4577452	R4577453
23-122700-002[9]	2-1/2 "	R424244X	R424244X[37]	60050266	69270757[41]	R4111992[214]	R4122386	R4577452	R4577453
23-122703-002[186]	2-7/8 "	60050145X	60050145X[37]	60050146	69270702[41]	R4111992[214]	R4122386	R4577452	R4577453
23-122691-002[188]	2-7/8 "	60050145X	60050145X[37]	60050146	69270702[41]	R4111992[214]	R4122386	R4577452	R4577453
N/A	1-1/4 "	R4133720	R4133721	R4166923	NR	R4111630[222]	N/A	R4577452	R4577453
N/A	1-1/4 "	R4133581	R4133581	R4166923	NR	R4111992[214]	R4122386	R4577452	R4577453
N/A	1-1/2 "	R4033607	R4033607	R4166818	NR	-	-	R4577147	R4577147
N/A	1-5/8 "	R4133338	R4133338	R4166689	NR	-	-	R4577147	R4577147
N/A	1-5/8 "	R4133338	R4133338	R4166689	NR	-	-	R4577147	R4577147
N/A	1-3/4 "	R4133400	R4133400	R4166917	NR	-	-	R4577147	R4577147
N/A	1-5/8 "	201185	201186[329]	SP7895S	NR	-	-	R4577147	R4577147
N/A	1-5/8 "	201181	201182	SP7895S	NR	-	-	R4577147	R4577147
N/A	1-5/8 "	201181	201182	SP7895S	NR	-	-	R4577147	R4577147
N/A	1-5/8 "	201185	201186[329]	SP7895S	NR	-	-	R4577147	R4577147
N/A	1.09375	R4133484	R4133485	R4166819	NR	R4111629[53]	R4122484	R4577460	R4577460
N/A	1-1/8 "	R4133714	R4133715	R4166926	NR	R4111631[221]	R4122486	R4577452	R4577453
N/A	1-1/8 "	R4133719	R4133718	R4166926	NR	R4111634[53]	N/A	R4577452	R4577453
N/A	1-1/8 "	R4133714	R4133715	R4166926	NR	R4111995[53]	-	R4577454	R4577455
N/A	1-1/8 "	R4133716	R4133717	R4166926	NR	R4111772[53]	R4122488	R4577454	R4577455
23-122700-002[9]	2-1/2 "	R424244X	R424244X[37]	60050266	69270757[41]	R4111992[214]	R4122386	R4577452	R4577453
23-122691-002[188]	2-7/8 "	60050145X	60050145X[37]	60050146	69270702[41]	R4111992[214]	R4122386	R4577452	R4577453
23-122703-002[186]	2-7/8 "	60050145X	60050145X[37]	60050146	69270702[41]	R4111992[214]	R4122386	R4577452	R4577453
N/A	1-1/4 "	R4133720	R4133721	R4166923	NR	R4111630[222]	N/A	R4577452	R4577453
N/A	1-1/4 "	R4133581	R4133581	R4166923	NR	R4111992[214]	R4122386	R4577452	R4577453
N/A	1-1/2 "	R4033607	R4033607	R4166818	NR	-	-	R4577147	R4577147
N/A	1-5/8 "	R4133338	R4133338	R4166689	NR	-	-	R4577147	R4577147
N/A	1-5/8 "	R4133338	R4133338	R4166689	NR	-	-	R4577147	R4577147

329 - Forward

340 - Use 69160457 for Disc Pad Retainer Clip

341 - Use 69160445 for Disc Pad Retainer Clip

MAKE MODEL YEAR AXLE CODE AXLE WEIGHT	AXLE & BRK. TYPE	BRK. MFG.	BRAKE SIZE	FMSI	MERITOR DISC PAD OR BRAKE SHOE	MERITOR GUIDE PIN OR RETURN SPRING KIT	MERITOR CALIPER HWD. KIT OR RETURN SPRING KIT	MERITOR ADJUSTER KIT (LEFT WHEEL)	MERITOR ADJUSTER KIT (RIGHT WHEEL)
FORD(Cont.)									
LTS800 SERIES: LOUISVILLE 106.3 BBC TANDEM CHASSIS CAB, SET BACK FRONT AXLE TRUCK(Cont.)									
1978									
R185	Ra	WG	15 " x 7 "	4597 - 383	R700383	R40H597	R40H9200	R40H3540	R40H3541
1977									
	Ra	LG	15 " x 6 "	4504A - 543	N/A	R40H618	NR	NR	NR
	Ra	LG	15 " x 6 "	4504A - 543	N/A	R40H618	NR	SP7888S	SP7888S
	Ra	LG	15 " x 7 "	4505A - 544	N/A	R40H618	NR	SP7888S	SP7888S
	Ra	LG	15 " x 7 "	4505A - 544	N/A	R40H618	NR	NR	NR
F050, F055, F060	Fa	KH	14 " x 2-1/2 "	2060 - 361	Discontinued	R40H596	R40H9219	R40H3536	R40H3537
F070	Fa	WG	15 " x 3 "	1245C - 321	R700321	R40H521	R40H9237	R40H3502	R40H3503
	Fa	WG	15 " x 3 "	1245C - 321	R700321	R40H521	R40H9237	R40H3502	R40H3503
	Fa	WG	15 " x 3 "	1245C - 321	R700321	R40H521	R40H9237	R40H3502	R40H3503
	Fa	WG	15 " x 3 "	1245C - 321	R700321	R40H521	R40H9237	R40H3502	R40H3503
	Fd	DN		7141 - D224	MD224[340]	69310693	60050153	NR	NR
F080, F090	Fd	DN		7149 - D236	MD236[341]	69310693	R40H5523	NR	NR
	Fd	DN		7149 - D236	MD236[341]	69310693	R40H5523	NR	NR
F090, F120	Fa	WG	15 " x 3 "	1245C - 321	R700321	R40H521	R40H9237	R40H3502	R40H3503
	Fa	WG	15 " x 3 "	1245C - 321	R700321	R40H521	R40H9237	R40H3502	R40H3503
R170, R175	Ra	KH	15 " x 5 "	4646 - 400	R700400	R40H595	R40H9220	R40H3538	R40H3539
	Ra	WG	15 " x 5 "	1252 - 346	R700346	R40H597	R40H9200	R40H3540	R40H3541
R185	Ra	WG	15 " x 6 "	4596 - 381	R700381	R40H597	R40H9200	R40H3540	R40H3541
	Ra	WG	15 " x 7 "	4597 - 383	R700383	R40H597	R40H9200	R40H3540	R40H3541
1976									
	Ra	LG	15 " x 6 "	4504A - 543	N/A	R40H618	NR	NR	NR
	Ra	LG	15 " x 6 "	4504A - 543	N/A	R40H618	NR	SP7888S	SP7888S
	Ra	LG	15 " x 7 "	4505A - 544	N/A	R40H618	NR	SP7888S	SP7888S
	Ra	LG	15 " x 7 "	4505A - 544	N/A	R40H618	NR	NR	NR
F050, F055, F060	Fa	KH	14 " x 2-1/2 "	2060 - 361	Discontinued	R40H596	R40H9219	R40H3536	R40H3537
F070	Fa	WG	15 " x 3 "	1245C - 321	R700321	R40H521	R40H9237	R40H3502	R40H3503
	Fa	WG	15 " x 3 "	1245C - 321	R700321	R40H521	R40H9237	R40H3502	R40H3503
	Fa	WG	15 " x 3 "	1245C - 321	R700321	R40H521	R40H9237	R40H3502	R40H3503
	Fa	WG	15 " x 3 "	1245C - 321	R700321	R40H521	R40H9237	R40H3502	R40H3503
	Fd	DN		7141 - D224	MD224[340]	69310693	60050153	NR	NR
F080, F090	Fd	DN		7149 - D236	MD236[341]	69310693	R40H5523	NR	NR
	Fd	DN		7149 - D236	MD236[341]	69310693	R40H5523	NR	NR
F090, F120	Fa	WG	15 " x 3 "	1245C - 321	R700321	R40H521	R40H9237	R40H3502	R40H3503
	Fa	WG	15 " x 3 "	1245C - 321	R700321	R40H521	R40H9237	R40H3502	R40H3503
R170, R175	Ra	KH	15 " x 5 "	4646 - 400	R700400	R40H595	R40H9220	R40H3538	R40H3539
	Ra	WG	15 " x 5 "	1252 - 346	R700346	R40H597	R40H9200	R40H3540	R40H3541
R185	Ra	WG	15 " x 6 "	4596 - 381	R700381	R40H597	R40H9200	R40H3540	R40H3541
	Ra	WG	15 " x 7 "	4597 - 383	R700383	R40H597	R40H9200	R40H3540	R40H3541
1975									
	Ra	LG	15 " x 6 "	4504A - 543	N/A	R40H618	NR	NR	NR
	Ra	LG	15 " x 6 "	4504A - 543	N/A	R40H618	NR	SP7888S	SP7888S
	Ra	LG	15 " x 7 "	4505A - 544	N/A	R40H618	NR	SP7888S	SP7888S
	Ra	LG	15 " x 7 "	4505A - 544	N/A	R40H618	NR	NR	NR
F050, F055, F060	Fa	KH	14 " x 2-1/2 "	2060 - 361	Discontinued	R40H596	R40H9219	R40H3536	R40H3537
F070	Fa	WG	15 " x 3 "	1245C - 321	R700321	R40H521	R40H9237	R40H3502	R40H3503
	Fa	WG	15 " x 3 "	1245C - 321	R700321	R40H521	R40H9237	R40H3502	R40H3503
	Fa	WG	15 " x 3 "	1245C - 321	R700321	R40H521	R40H9237	R40H3502	R40H3503
	Fa	WG	15 " x 3 "	1245C - 321	R700321	R40H521	R40H9237	R40H3502	R40H3503
	Fd	DN		7141 - D224	MD224[340]	69310693	60050153	NR	NR
F080, F090	Fd	DN		7149 - D236	MD236[341]	69310693	R40H5523	NR	NR
	Fd	DN		7149 - D236	MD236[341]	69310693	R40H5523	NR	NR
F090, F120	Fa	WG	15 " x 3 "	1245C - 321	R700321	R40H521	R40H9237	R40H3502	R40H3503
	Fa	WG	15 " x 3 "	1245C - 321	R700321	R40H521	R40H9237	R40H3502	R40H3503
R170, R175	Ra	KH	15 " x 5 "	4646 - 400	R700400	R40H595	R40H9220	R40H3538	R40H3539
	Ra	WG	15 " x 5 "	1252 - 346	R700346	R40H597	R40H9200	R40H3540	R40H3541
R185	Ra	WG	15 " x 6 "	4596 - 381	R700381	R40H597	R40H9200	R40H3540	R40H3541
	Ra	WG	15 " x 7 "	4597 - 383	R700383	R40H597	R40H9200	R40H3540	R40H3541
1974									
	Ra	LG	15 " x 6 "	4504A - 543	N/A	R40H618	NR	SP7888S	SP7888S
	Ra	LG	15 " x 6 "	4504A - 543	N/A	R40H618	NR	NR	NR
	Ra	LG	15 " x 7 "	4505A - 544	N/A	R40H618	NR	NR	NR

9 - 6 Stud, Dayton Rotor, Hat Style
53 - Power Brakes
214 - Power Brakes, Split System

37 - Also available as a New unit
186 - 10 Stud
221 - Power Brakes, 17,500 or 18,500 lb. Rear Axle

41 - Aluminum piston
188 - 6 Stud, 9.251" Hub
222 - Power Brakes, 18,500 or 22,000 lb. Rear Axle

MERITOR DRUM OR ROTOR NO.	CALIPER OR CYLINDER BORE SIZE	MERITOR CALIPER OR WHEEL CYLINDER (LEFT)	MERITOR CALIPER OR WHEEL CYLINDER (RIGHT)	MERITOR CALIPER OR WHEEL CYLINDER REPAIR KIT	MERITOR CALIPER PISTON	MERITOR MASTER CYLINDER	MERITOR MASTER CYLINDER KIT	MERITOR BRAKE HOSE (LEFT)	MERITOR BRAKE HOSE (RIGHT)
									FORD(Cont.)
LTS800 SERIES: LOUISVILLE 106.3 BBC TANDEM CHASSIS CAB, SET BACK FRONT AXLE TRUCK(Cont.)									
N/A	1-3/4 "	R4133400	R4133400	R4166917	NR	-	-	R4577147	R4577147
N/A	1-5/8 "	201181	201182	SP7895S	NR	-	-	R4577147	R4577147
N/A	1-5/8 "	201185	201186[329]	SP7895S	NR	-	-	R4577147	R4577147
N/A	1-5/8 "	201185	201186[329]	SP7895S	NR	-	-	R4577147	R4577147
N/A	1-5/8 "	201181	201182	SP7895S	NR	-	-	R4577147	R4577147
N/A	1.09375	R4133484	R4133485	R4166819	NR	R4111629[53]	R4122484	R4577460	R4577460
N/A	1-1/8 "	R4133719	R4133718	R4166926	NR	R4111634[53]	N/A	R4577452	R4577453
N/A	1-1/8 "	R4133714	R4133715	R4166926	NR	R4111995[53]	-	R4577454	R4577455
N/A	1-1/8 "	R4133716	R4133717	R4166926	NR	R4111772[53]	R4122488	R4577454	R4577455
N/A	1-1/8 "	R4133714	R4133715	R4166926	NR	R4111631[221]	R4122486	R4577452	R4577453
23-122700-002[9]	2-1/2 "	R424244X	R424244X[37]	60050266	69270757[41]	R4111992[214]	R4122386	R4577452	R4577453
23-122703-002[186]	2-7/8 "	60050145X	60050145X[37]	60050146	69270702[41]	R4111992[214]	R4122386	R4577452	R4577453
23-122691-002[188]	2-7/8 "	60050145X	60050145X[37]	60050146	69270702[41]	R4111992[214]	R4122386	R4577452	R4577453
N/A	1-1/4 "	R4133581	R4133581	R4166923	NR	R4111992[214]	R4122386	R4577452	R4577453
N/A	1-1/4 "	R4133720	R4133721	R4166923	NR	R4111630[222]	N/A	R4577452	R4577453
N/A	1-1/2 "	R4033607	R4033607	R4166818	NR	-	-	R4577147	R4577147
N/A	1-5/8 "	R4133338	R4133338	R4166689	NR	-	-	R4577147	R4577147
N/A	1-5/8 "	R4133338	R4133338	R4166689	NR	-	-	R4577147	R4577147
N/A	1-3/4 "	R4133400	R4133400	R4166917	NR	-	-	R4577147	R4577147
N/A	1-5/8 "	201181	201182	SP7895S	NR	-	-	R4577147	R4577147
N/A	1-5/8 "	201185	201186[329]	SP7895S	NR	-	-	R4577147	R4577147
N/A	1-5/8 "	201185	201186[329]	SP7895S	NR	-	-	R4577147	R4577147
N/A	1-5/8 "	201181	201182	SP7895S	NR	-	-	R4577147	R4577147
N/A	1.09375	R4133484	R4133485	R4166819	NR	R4111629[53]	R4122484	R4577460	R4577460
N/A	1-1/8 "	R4133716	R4133717	R4166926	NR	R4111772[53]	R4122488	R4577454	R4577455
N/A	1-1/8 "	R4133714	R4133715	R4166926	NR	R4111631[221]	R4122486	R4577452	R4577453
N/A	1-1/8 "	R4133714	R4133715	R4166926	NR	R4111995[53]	-	R4577454	R4577455
N/A	1-1/8 "	R4133719	R4133718	R4166926	NR	R4111634[53]	N/A	R4577452	R4577453
23-122700-002[9]	2-1/2 "	R424244X	R424244X[37]	60050266	69270757[41]	R4111992[214]	R4122386	R4577452	R4577453
23-122691-002[188]	2-7/8 "	60050145X	60050145X[37]	60050146	69270702[41]	R4111992[214]	R4122386	R4577452	R4577453
23-122703-002[186]	2-7/8 "	60050145X	60050145X[37]	60050146	69270702[41]	R4111992[214]	R4122386	R4577452	R4577453
N/A	1-1/4 "	R4133581	R4133581	R4166923	NR	R4111992[214]	R4122386	R4577452	R4577453
N/A	1-1/4 "	R4133720	R4133721	R4166923	NR	R4111630[222]	N/A	R4577452	R4577453
N/A	1-1/2 "	R4033607	R4033607	R4166818	NR	-	-	R4577147	R4577147
N/A	1-5/8 "	R4133338	R4133338	R4166689	NR	-	-	R4577147	R4577147
N/A	1-5/8 "	R4133338	R4133338	R4166689	NR	-	-	R4577147	R4577147
N/A	1-3/4 "	R4133400	R4133400	R4166917	NR	-	-	R4577147	R4577147
N/A	1-5/8 "	201181	201182	SP7895S	NR	-	-	R4577147	R4577147
N/A	1-5/8 "	201185	201186[329]	SP7895S	NR	-	-	R4577147	R4577147
N/A	1-5/8 "	201185	201186[329]	SP7895S	NR	-	-	R4577147	R4577147
N/A	1-5/8 "	201181	201182	SP7895S	NR	-	-	R4577147	R4577147
N/A	1.09375	R4133484	R4133485	R4166819	NR	R4111629[53]	R4122484	R4577460	R4577460
N/A	1-1/8 "	R4133714	R4133715	R4166926	NR	R4111631[221]	R4122486	R4577452	R4577453
N/A	1-1/8 "	R4133719	R4133718	R4166926	NR	R4111634[53]	N/A	R4577452	R4577453
N/A	1-1/8 "	R4133716	R4133717	R4166926	NR	R4111772[53]	R4122488	R4577454	R4577455
N/A	1-1/8 "	R4133714	R4133715	R4166926	NR	R4111995[53]	-	R4577454	R4577455
23-122700-002[9]	2-1/2 "	R424244X	R424244X[37]	60050266	69270757[41]	R4111992[214]	R4122386	R4577452	R4577453
23-122691-002[188]	2-7/8 "	60050145X	60050145X[37]	60050146	69270702[41]	R4111992[214]	R4122386	R4577452	R4577453
23-122703-002[186]	2-7/8 "	60050145X	60050145X[37]	60050146	69270702[41]	R4111992[214]	R4122386	R4577452	R4577453
N/A	1-1/4 "	R4133581	R4133581	R4166923	NR	R4111992[214]	R4122386	R4577452	R4577453
N/A	1-1/4 "	R4133720	R4133721	R4166923	NR	R4111630[222]	N/A	R4577452	R4577453
N/A	1-1/2 "	R4033607	R4033607	R4166818	NR	-	-	R4577147	R4577147
N/A	1-5/8 "	R4133338	R4133338	R4166689	NR	-	-	R4577147	R4577147
N/A	1-5/8 "	R4133338	R4133338	R4166689	NR	-	-	R4577147	R4577147
N/A	1-3/4 "	R4133400	R4133400	R4166917	NR	-	-	R4577147	R4577147
N/A	1-5/8 "	201185	201186[329]	SP7895S	NR	-	-	R4577147	R4577147
N/A	1-5/8 "	201181	201182	SP7895S	NR	-	-	R4577147	R4577147
N/A	1-5/8 "	201181	201182	SP7895S	NR	-	-	R4577147	R4577147

329 - Forward

340 - Use 69160457 for Disc Pad Retainer Clip

341 - Use 69160445 for Disc Pad Retainer Clip

MAKE MODEL YEAR AXLE CODE AXLE WEIGHT	AXLE & BRK. TYPE	BRK. MFG.	BRAKE SIZE	FMSI	MERITOR DISC PAD OR BRAKE SHOE	MERITOR GUIDE PIN OR RETURN SPRING KIT	MERITOR CALIPER HWD. KIT OR RETURN SPRING KIT	MERITOR ADJUSTER KIT (LEFT WHEEL)	MERITOR ADJUSTER KIT (RIGHT WHEEL)
FORD(Cont.)									
LTS800 SERIES: LOUISVILLE 106.3 BBC TANDEM CHASSIS CAB, SET BACK FRONT AXLE TRUCK(Cont.)									
1974									
	Ra	LG	15 " x 7 "	4505A - 544	N/A	R40H618	NR	SP7888S	SP7888S
F050, F055, F060	Fa	KH	14 " x 2-1/2 "	2060 - 361	Discontinued	R40H596	R40H9219	R40H3536	R40H3537
F070	Fa	WG	15 " x 3 "	1245C - 321	R700321	R40H521	R40H9237	R40H3502	R40H3503
	Fa	WG	15 " x 3 "	1245C - 321	R700321	R40H521	R40H9237	R40H3502	R40H3503
	Fa	WG	15 " x 3 "	1245C - 321	R700321	R40H521	R40H9237	R40H3502	R40H3503
	Fa	WG	15 " x 3 "	1245C - 321	R700321	R40H521	R40H9237	R40H3502	R40H3503
	Fd	DN		7141 - D224	MD224[340]	69310693	60050153	NR	NR
F080, F090	Fd	DN		7149 - D236	MD236[341]	69310693	R40H5523	NR	NR
	Fd	DN		7149 - D236	MD236[341]	69310693	R40H5523	NR	NR
F090, F120	Fa	WG	15 " x 3 "	1245C - 321	R700321	R40H521	R40H9237	R40H3502	R40H3503
	Fa	WG	15 " x 3 "	1245C - 321	R700321	R40H521	R40H9237	R40H3502	R40H3503
R170, R175	Ra	KH	15 " x 5 "	4646 - 400	R700400	R40H595	R40H9220	R40H3538	R40H3539
	Ra	WG	15 " x 5 "	1252 - 346	R700346	R40H597	R40H9200	R40H3540	R40H3541
R185	Ra	WG	15 " x 6 "	4596 - 381	R700381	R40H597	R40H9200	R40H3540	R40H3541
	Ra	WG	15 " x 7 "	4597 - 383	R700383	R40H597	R40H9200	R40H3540	R40H3541
1973									
	Ra	LG	15 " x 6 "	4504A - 543	N/A	R40H618	NR	NR	NR
	Ra	LG	15 " x 6 "	4504A - 543	N/A	R40H618	NR	SP7888S	SP7888S
	Ra	LG	15 " x 7 "	4505A - 544	N/A	R40H618	NR	NR	NR
	Ra	LG	15 " x 7 "	4505A - 544	N/A	R40H618	NR	SP7888S	SP7888S
F050, F055, F060	Fa	KH	14 " x 2-1/2 "	2060 - 361	Discontinued	R40H596	R40H9219	R40H3536	R40H3537
F070	Fa	WG	15 " x 3 "	1245C - 321	R700321	R40H521	R40H9237	R40H3502	R40H3503
	Fa	WG	15 " x 3 "	1245C - 321	R700321	R40H521	R40H9237	R40H3502	R40H3503
	Fa	WG	15 " x 3 "	1245C - 321	R700321	R40H521	R40H9237	R40H3502	R40H3503
	Fa	WG	15 " x 3 "	1245C - 321	R700321	R40H521	R40H9237	R40H3502	R40H3503
	Fd	DN		7141 - D224	MD224[340]	69310693	60050153	NR	NR
F080, F090	Fd	DN		7149 - D236	MD236[341]	69310693	R40H5523	NR	NR
	Fd	DN		7149 - D236	MD236[341]	69310693	R40H5523	NR	NR
F090, F120	Fa	WG	15 " x 3 "	1245C - 321	R700321	R40H521	R40H9237	R40H3502	R40H3503
	Fa	WG	15 " x 3 "	1245C - 321	R700321	R40H521	R40H9237	R40H3502	R40H3503
R170, R175	Ra	KH	15 " x 5 "	4646 - 400	R700400	R40H595	R40H9220	R40H3538	R40H3539
	Ra	WG	15 " x 5 "	1252 - 346	R700346	R40H597	R40H9200	R40H3540	R40H3541
R185	Ra	WG	15 " x 6 "	4596 - 381	R700381	R40H597	R40H9200	R40H3540	R40H3541
	Ra	WG	15 " x 7 "	4597 - 383	R700383	R40H597	R40H9200	R40H3540	R40H3541
FREIGHTLINER									
FL50									
2004									
	Fd	Bosch		7654 - D786	MD786A	R4011754	NR	NR	NR
	Fd	Bosch		7655 - D786	MD786	R4011754	NR	NR	NR
	Rd	Bosch		7655 - D786	MD786	R4011754	NR	NR	NR
	Rd	Bosch		7654 - D786	MD786A	R4011754	NR	NR	NR
2003									
	Fd	Bosch		7655 - D786	MD786	R4011754	NR	NR	NR
	Fd	Bosch		7654 - D786	MD786A	R4011754	NR	NR	NR
	Rd	Bosch		7655 - D786	MD786	R4011754	NR	NR	NR
	Rd	Bosch		7654 - D786	MD786A	R4011754	NR	NR	NR
2002									
	Fd	Bosch		7655 - D786	MD786	R4011754	NR	NR	NR
	Fd	Bosch		7654 - D786	MD786A	R4011754	NR	NR	NR
	Rd	Bosch		7654 - D786	MD786A	R4011754	NR	NR	NR
	Rd	Bosch		7655 - D786	MD786	R4011754	NR	NR	NR
2001									
	Fd	Bosch		7655 - D786	MD786	R4011754	NR	NR	NR
	Fd	Bosch		7654 - D786	MD786A	R4011754	NR	NR	NR
	Rd	Bosch		7655 - D786	MD786	R4011754	NR	NR	NR
	Rd	Bosch		7654 - D786	MD786A	R4011754	NR	NR	NR
2000									
	Fd	Bosch		7655 - D786	MD786	R4011754	NR	NR	NR
	Fd	Bosch		7654 - D786	MD786A	R4011754	NR	NR	NR
	Fd	BX		7142 - D225	MD225	R40H5010	R40H5522	NR	NR

9 - 6 Stud, Dayton Rotor, Hat Style
53 - Power Brakes
37 - Also available as a New unit
72 - Phenolic/Steel Face
41 - Aluminum piston
186 - 10 Stud
188 - 6 Stud, 9.251" Hub
214 - Power Brakes, Split System
221 - Power Brakes, 17,500 or 18,500 lb. Rear Axle

MERITOR DRUM OR ROTOR NO.	CALIPER OR CYLINDER BORE SIZE	MERITOR CALIPER OR WHEEL CYLINDER (LEFT)	MERITOR CALIPER OR WHEEL CYLINDER (RIGHT)	MERITOR CALIPER OR WHEEL CYLINDER REPAIR KIT	MERITOR CALIPER PISTON	MERITOR MASTER CYLINDER	MERITOR MASTER CYLINDER KIT	MERITOR BRAKE HOSE (LEFT)	MERITOR BRAKE HOSE (RIGHT)
FORD(Cont.)									
LTS800 SERIES: LOUISVILLE 106.3 BBC TANDEM CHASSIS CAB, SET BACK FRONT AXLE TRUCK(Cont.)									
N/A	1-5/8 "	201185	201186[329]	SP7895S	NR	-	-	R4577147	R4577147
N/A	1.09375	R4133484	R4133485	R4166819	NR	R4111629[53]	R4122484	R4577460	R4577460
N/A	1-1/8 "	R4133714	R4133715	R4166926	NR	R4111995[53]	-	R4577454	R4577455
N/A	1-1/8 "	R4133716	R4133717	R4166926	NR	R4111772[53]	R4122488	R4577454	R4577455
N/A	1-1/8 "	R4133719	R4133718	R4166926	NR	R4111634[53]	N/A	R4577452	R4577453
N/A	1-1/8 "	R4133714	R4133715	R4166926	NR	R4111631[221]	R4122486	R4577452	R4577453
23-122700-002[9]	2-1/2 "	R424244X	R424244X[37]	60050266	69270757[41]	R4111992[214]	R4122386	R4577452	R4577453
23-122703-002[186]	2-7/8 "	60050145X	60050145X[37]	60050146	69270702[41]	R4111992[214]	R4122386	R4577452	R4577453
23-122691-002[188]	2-7/8 "	60050145X	60050145X[37]	60050146	69270702[41]	R4111992[214]	R4122386	R4577452	R4577453
N/A	1-1/4 "	R4133581	R4133581	R4166923	NR	R4111992[214]	R4122386	R4577452	R4577453
N/A	1-1/4 "	R4133720	R4133721	R4166923	NR	R4111630[222]	N/A	R4577452	R4577453
N/A	1-1/2 "	R4033607	R4033607	R4166818	NR	-	-	R4577147	R4577147
N/A	1-5/8 "	R4133338	R4133338	R4166689	NR	-	-	R4577147	R4577147
N/A	1-5/8 "	R4133338	R4133338	R4166689	NR	-	-	R4577147	R4577147
N/A	1-3/4 "	R4133400	R4133400	R4166917	NR	-	-	R4577147	R4577147
N/A	1-5/8 "	201181	201182	SP7895S	NR	-	-	R4577147	R4577147
N/A	1-5/8 "	201185	201186[329]	SP7895S	NR	-	-	R4577147	R4577147
N/A	1-5/8 "	201181	201182	SP7895S	NR	-	-	R4577147	R4577147
N/A	1-5/8 "	201185	201186[329]	SP7895S	NR	-	-	R4577147	R4577147
N/A	1.09375	R4133484	R4133485	R4166819	NR	R4111629[53]	R4122484	R4577460	R4577460
N/A	1-1/8 "	R4133719	R4133718	R4166926	NR	R4111634[53]	N/A	R4577452	R4577453
N/A	1-1/8 "	R4133714	R4133715	R4166926	NR	R4111631[221]	R4122486	R4577452	R4577453
N/A	1-1/8 "	R4133716	R4133717	R4166926	NR	R4111772[53]	R4122488	R4577454	R4577455
N/A	1-1/8 "	R4133714	R4133715	R4166926	NR	R4111995[53]	-	R4577454	R4577455
23-122700-002[9]	2-1/2 "	R424244X	R424244X[37]	60050266	69270757[41]	R4111992[214]	R4122386	R4577452	R4577453
23-122691-002[188]	2-7/8 "	60050145X	60050145X[37]	60050146	69270702[41]	R4111992[214]	R4122386	R4577452	R4577453
23-122703-002[186]	2-7/8 "	60050145X	60050145X[37]	60050146	69270702[41]	R4111992[214]	R4122386	R4577452	R4577453
N/A	1-1/4 "	R4133720	R4133721	R4166923	NR	R4111630[222]	N/A	R4577452	R4577453
N/A	1-1/4 "	R4133581	R4133581	R4166923	NR	R4111992[214]	R4122386	R4577452	R4577453
N/A	1-1/2 "	R4033607	R4033607	R4166818	NR	-	-	R4577147	R4577147
N/A	1-5/8 "	R4133338	R4133338	R4166689	NR	-	-	R4577147	R4577147
N/A	1-5/8 "	R4133338	R4133338	R4166689	NR	-	-	R4577147	R4577147
N/A	1-3/4 "	R4133400	R4133400	R4166917	NR	-	-	R4577147	R4577147
FREIGHTLINER									
FL50									
-	66mm	R424153263	R424153263[356]	R4011752	R4011751	-	-	-	-
-	73mm	R424153216	R424153216[365]	R4011758	R4011757	-	-	-	-
-	73mm	R424153216	R424153216[365]	R4011758	R4011757	-	-	-	-
-	66mm	R424153263	R424153263[356]	R4011752	R4011751	-	-	-	-
-	73mm	R424153216	R424153216[365]	R4011758	R4011757	-	-	-	-
-	66mm	R424153263	R424153263[356]	R4011752	R4011751	-	-	-	-
-	73mm	R424153216	R424153216[365]	R4011758	R4011757	-	-	-	-
-	66mm	R424153263	R424153263[356]	R4011752	R4011751	-	-	-	-
-	73mm	R424153216	R424153216[365]	R4011758	R4011757	-	-	-	-
-	66mm	R424153263	R424153263[356]	R4011752	R4011751	-	-	-	-
-	66mm	R424153263	R424153263[356]	R4011752	R4011751	-	-	-	-
-	73mm	R424153216	R424153216[365]	R4011758	R4011757	-	-	-	-
-	73mm	R424153216	R424153216[365]	R4011758	R4011757[72]	-	-	-	-
-	66mm	R424153263	R424153263[356]	R4011752	R4011751[72]	-	-	-	-
-	73mm	R424153216	R424153216[365]	R4011758	R4011757[72]	-	-	-	-
-	66mm	R424153263	R424153263[356]	R4011752	R4011751[72]	-	-	-	-
-	73mm	R424153216	R424153216[365]	R4011758	R4011757[72]	-	-	-	-
-	66mm	R424153263	R424153263[356]	R4011752	R4011751[72]	-	-	-	-
-	2-7/8 "	R4255656	R4255656	R4066365	R4090096[72]	-	-	-	-

222 - Power Brakes, 18,500 or 22,000 lb. Rear Axle
329 - Forward
340 - Use 69160457 for Disc Pad Retainer Clip
341 - Use 69160445 for Disc Pad Retainer Clip
356 - Single Hydraulic System, Bosch Cylinder, after Serial No. Q20000, 18,500lb. Rear Axle
365 - Caliper Loaded with Hardware and Disc Pads

MAKE MODEL YEAR AXLE CODE AXLE WEIGHT	AXLE & BRK. TYPE	BRK. MFG.	BRAKE SIZE	FMSI	MERITOR DISC PAD OR BRAKE SHOE	MERITOR GUIDE PIN OR RETURN SPRING KIT	MERITOR CALIPER HWD. KIT OR RETURN SPRING KIT	MERITOR ADJUSTER KIT (LEFT WHEEL)	MERITOR ADJUSTER KIT (RIGHT WHEEL)
FREIGHTLINER(Cont.)									
FL50(Cont.)									
2000									
	Fd	BX		7815 - D380	MD184	R40H5010	R40H5519	NR	NR
	Rd	Bosch		7655 - D786	MD786	R4011754	NR	NR	NR
	Rd	Bosch		7654 - D786	MD786A	R4011754	NR	NR	NR
	Rd	BX		7142 - D225	MD225	R40H5010	R40H5522	NR	NR
	Rd	BX		7815 - D380	MD184	R40H5010	R40H5519	NR	NR
1999									
	Fd	BX		7815 - D380	MD184	R40H5010	R40H5519	NR	NR
	Fd	BX		7142 - D225	MD225	R40H5010	R40H5522	NR	NR
	Rd	BX		7142 - D225	MD225	R40H5010	R40H5522	NR	NR
	Rd	BX		7815 - D380	MD184	R40H5010	R40H5519	NR	NR
1998									
	Fd	BX		7142 - D225	MD225	R40H5010	R40H5522	NR	NR
	Fd	BX		7815 - D380	MD184	R40H5010	R40H5519	NR	NR
	Rd	BX		7142 - D225	MD225	R40H5010	R40H5522	NR	NR
	Rd	BX		7815 - D380	MD184	R40H5010	R40H5519	NR	NR
1997									
	Fd	BX		7815 - D380	MD184	R40H5010	R40H5519	NR	NR
	Fd	BX		7142 - D225	MD225	R40H5010	R40H5522	NR	NR
	Rd	BX		7142 - D225	MD225	R40H5010	R40H5522	NR	NR
	Rd	BX		7815 - D380	MD184	R40H5010	R40H5519	NR	NR
1996									
	Fd	BX		7108 - D184	MD184	R40H5010	R40H5519	NR	NR
	Fd	BX		7142 - D225	MD225	R40H5010	R40H5522	NR	NR
	Fd	BX		7108 - D184	MD184	R40H5010	R40H5519	NR	NR
	Fd	BX		7108 - D184	MD184	R40H5010	R40H5519	NR	NR
	Fd	BX		7142 - D225	MD225	R40H5010	R40H5522	NR	NR
	Fd	BX		7142 - D225	MD225	R40H5010	R40H5522	NR	NR
	Fd	BX		7142 - D225	MD225	R40H5010	R40H5522	NR	NR
	Rd	BX		7142 - D225	MD225	R40H5010	R40H5522	NR	NR
	Rd	BX		7142 - D225	MD225	R40H5010	R40H5522	NR	NR
	Rd	BX		7142 - D225	MD225	R40H5010	R40H5522	NR	NR
	Rd	BX		7108 - D184	MD184	R40H5010	R40H5519	NR	NR
	Rd	BX		7142 - D225	MD225	R40H5010	R40H5522	NR	NR
	Rd	BX		7108 - D184	MD184	R40H5010	R40H5519	NR	NR
	Rd	BX		7108 - D184	MD184	R40H5010	R40H5519	NR	NR
1992									
	Fd	BX		7108 - D184	MD184	R40H5010	R40H5519	NR	NR
	Fd	BX		7142 - D225	MD225	R40H5010	R40H5522	NR	NR
	Rd	BX		7142 - D225	MD225	R40H5010	R40H5522	NR	NR
	Rd	BX		7108 - D184	MD184	R40H5010	R40H5519	NR	NR
FL60									
2004									
	Fd	Bosch		7655 - D786	MD786	R4011754	NR	NR	NR
	Fd	Bosch		7654 - D786	MD786A	R4011754	NR	NR	NR
	Rd	Bosch		7654 - D786	MD786A	R4011754	NR	NR	NR
	Rd	Bosch		7655 - D786	MD786	R4011754	NR	NR	NR
2003									
	Fd	Bosch		7655 - D786	MD786	R4011754	NR	NR	NR
	Fd	Bosch		7654 - D786	MD786A	R4011754	NR	NR	NR
	Rd	Bosch		7654 - D786	MD786A	R4011754	NR	NR	NR
	Rd	Bosch		7655 - D786	MD786	R4011754	NR	NR	NR
2002									
	Fd	Bosch		7655 - D786	MD786	R4011754	NR	NR	NR
	Fd	Bosch		7654 - D786	MD786A	R4011754	NR	NR	NR
	Rd	Bosch		7655 - D786	MD786	R4011754	NR	NR	NR
	Rd	Bosch		7654 - D786	MD786A	R4011754	NR	NR	NR
2001									
	Fd	Bosch		7655 - D786	MD786	R4011754	NR	NR	NR
	Fd	Bosch		7654 - D786	MD786A	R4011754	NR	NR	NR
	Rd	Bosch		7654 - D786	MD786A	R4011754	NR	NR	NR
	Rd	Bosch		7655 - D786	MD786	R4011754	NR	NR	NR
2000									
	Fd	Bosch		7655 - D786	MD786	R4011754	NR	NR	NR

72 - Phenolic/Steel Face

356 - Single Hydraulic System, Bosch Cylinder, after Serial No. Q20000, 18,500lb. Rear Axle

365 - Caliper Loaded with Hardware and Disc Pads

MERITOR DRUM OR ROTOR NO.	CALIPER OR CYLINDER BORE SIZE	MERITOR CALIPER OR WHEEL CYLINDER (LEFT)	MERITOR CALIPER OR WHEEL CYLINDER (RIGHT)	MERITOR CALIPER OR WHEEL CYLINDER REPAIR KIT	MERITOR CALIPER PISTON	MERITOR MASTER CYLINDER	MERITOR MASTER CYLINDER KIT	MERITOR BRAKE HOSE (LEFT)	MERITOR BRAKE HOSE (RIGHT)
FREIGHTLINER(Cont.)									
FL50(Cont.)									
-	2-19/32 "	R4255313	R4255313	R40107771	R4090100P[72]	-	-	-	-
-	73mm	R424153216	R424153216[365]	R4011758	R4011757[72]	-	-	-	-
-	66mm	R424153263	R424153263[356]	R4011752	R4011751[72]	-	-	-	-
-	2-7/8 "	R4255656	R4255656	R4066365	R4090096[72]	-	-	-	-
-	2-19/32 "	R4255313	R4255313	R40107771	R4090100P[72]	-	-	-	-
-	2-19/32 "	R4255313	R4255313	R40107771	R4090100P[72]	-	-	-	-
-	2-7/8 "	R4255656	R4255656	R4066365	R4090096[72]	-	-	-	-
-	2-7/8 "	R4255656	R4255656	R4066365	R4090096[72]	-	-	-	-
-	2-19/32 "	R4255313	R4255313	R40107771	R4090100P[72]	-	-	-	-
-	2-7/8 "	R4255656	R4255656	R4066365	R4090096[72]	-	-	-	-
-	2-19/32 "	R4255313	R4255313	R40107771	R4090100P[72]	-	-	-	-
-	2-7/8 "	R4255656	R4255656	R4066365	R4090096[72]	-	-	-	-
-	2-19/32 "	R4255313	R4255313	R40107771	R4090100P[72]	-	-	-	-
-	2-19/32 "	R4255313	R4255313	R40107771	R4090100P[72]	-	-	-	-
-	2-7/8 "	R4255656	R4255656	R4066365	R4090096[72]	-	-	-	-
-	2-7/8 "	R4255656	R4255656	R4066365	R4090096[72]	-	-	-	-
-	2-19/32 "	R4255313	R4255313	R40107771	R4090100P[72]	-	-	-	-
N/A	2-19/32 "	R42R55314	R42R55314	R40107771	R4090100P[72]	-	-	-	-
N/A	2-7/8 "	R4255656	R4255656	R4066365	R4090096[72]	-	-	-	-
N/A	2-19/32 "	R42R55314	R42R55314	R40107771	R4090100P[72]	-	-	-	-
N/A	2-19/32 "	R42R55314	R42R55314	R40107771	R4090100P[72]	-	-	-	-
N/A	2-7/8 "	R4255656	R4255656	R4066365	R4090096[72]	-	-	-	-
N/A	2-7/8 "	R4255656	R4255656	R4066365	R4090096[72]	-	-	-	-
N/A	2-7/8 "	R4255656	R4255656	R4066365	R4090096[72]	-	-	-	-
N/A	2-7/8 "	R4255656	R4255656	R4066365	R4090096[72]	-	-	-	-
N/A	2-7/8 "	R4255656	R4255656	R4066365	R4090096[72]	-	-	-	-
N/A	2-7/8 "	R4255656	R4255656	R4066365	R4090096[72]	-	-	-	-
N/A	2-19/32 "	R42R55314	R42R55314	R40107771	R4090100P[72]	-	-	-	-
N/A	2-7/8 "	R4255656	R4255656	R4066365	R4090096[72]	-	-	-	-
N/A	2-19/32 "	R42R55314	R42R55314	R40107771	R4090100P[72]	-	-	-	-
N/A	2-19/32 "	R42R55314	R42R55314	R40107771	R4090100P[72]	-	-	-	-
N/A	2-19/32 "	R42R55314	R42R55314	R40107771	R4090100P[72]	-	-	-	-
N/A	2-7/8 "	R4255656	R4255656	R4066365	R4090096[72]	-	-	-	-
N/A	2-7/8 "	R4255656	R4255656	R4066365	R4090096[72]	-	-	-	-
N/A	2-19/32 "	R42R55314	R42R55314	R40107771	R4090100P[72]	-	-	-	-
FL60									
-	73mm	R424153216	R424153216[365]	R4011758	R4011757	-	-	-	-
-	66mm	R424153263	R424153263[356]	R4011752	R4011751	-	-	-	-
-	66mm	R424153263	R424153263[356]	R4011752	R4011751	-	-	-	-
-	73mm	R424153216	R424153216[365]	R4011758	R4011757	-	-	-	-
-	73mm	R424153216	R424153216[365]	R4011758	R4011757	-	-	-	-
-	66mm	R424153263	R424153263[356]	R4011752	R4011751	-	-	-	-
-	66mm	R424153263	R424153263[356]	R4011752	R4011751	-	-	-	-
-	73mm	R424153216	R424153216[365]	R4011758	R4011757	-	-	-	-
-	73mm	R424153216	R424153216[365]	R4011758	R4011757	-	-	-	-
-	66mm	R424153263	R424153263[356]	R4011752	R4011751	-	-	-	-
-	73mm	R424153216	R424153216[365]	R4011758	R4011757[72]	-	-	-	-
-	66mm	R424153263	R424153263[356]	R4011752	R4011751[72]	-	-	-	-
-	66mm	R424153263	R424153263[356]	R4011752	R4011751[72]	-	-	-	-
-	73mm	R424153216	R424153216[365]	R4011758	R4011757[72]	-	-	-	-
-	73mm	R424153216	R424153216[365]	R4011758	R4011757[72]	-	-	-	-

MAKE MODEL YEAR AXLE CODE AXLE WEIGHT	AXLE & BRK. TYPE	BRK. MFG.	BRAKE SIZE	FMSI	MERITOR DISC PAD OR BRAKE SHOE	MERITOR GUIDE PIN OR RETURN SPRING KIT	MERITOR CALIPER HWD. KIT OR RETURN SPRING KIT	MERITOR ADJUSTER KIT (LEFT WHEEL)	MERITOR ADJUSTER KIT (RIGHT WHEEL)
FREIGHTLINER(Cont.)									
FL60(Cont.)									
2000									
	Fd	Bosch		7654 - D786	MD786A	R4011754	NR	NR	NR
	Fd	BX		7142 - D225	MD225	R40H5010	R40H5522	NR	NR
	Fd	BX		7815 - D380	MD184	R40H5010	R40H5519	NR	NR
	Rd	Bosch		7654 - D786	MD786A	R4011754	NR	NR	NR
	Rd	Bosch		7655 - D786	MD786	R4011754	NR	NR	NR
	Rd	BX		7815 - D380	MD184	R40H5010	R40H5519	NR	NR
	Rd	BX		7142 - D225	MD225	R40H5010	R40H5522	NR	NR
1999									
	Fd	BX		7142 - D225	MD225	R40H5010	R40H5522	NR	NR
	Fd	BX		7815 - D380	MD184	R40H5010	R40H5519	NR	NR
	Rd	BX		7142 - D225	MD225	R40H5010	R40H5522	NR	NR
	Rd	BX		7815 - D380	MD184	R40H5010	R40H5519	NR	NR
1998									
	Fd	BX		7142 - D225	MD225	R40H5010	R40H5522	NR	NR
	Fd	BX		7815 - D380	MD184	R40H5010	R40H5519	NR	NR
	Rd	BX		7142 - D225	MD225	R40H5010	R40H5522	NR	NR
	Rd	BX		7815 - D380	MD184	R40H5010	R40H5519	NR	NR
1997									
	Fd	BX		7815 - D380	MD184	R40H5010	R40H5519	NR	NR
	Fd	BX		7142 - D225	MD225	R40H5010	R40H5522	NR	NR
	Rd	BX		7815 - D380	MD184	R40H5010	R40H5519	NR	NR
	Rd	BX		7142 - D225	MD225	R40H5010	R40H5522	NR	NR
1996									
	Fd	BX		7142 - D225	MD225	R40H5010	R40H5522	NR	NR
	Fd	BX		7108 - D184	MD184	R40H5010	R40H5519	NR	NR
	Fd	BX		7108 - D184	MD184	R40H5010	R40H5519	NR	NR
	Fd	BX		7142 - D225	MD225	R40H5010	R40H5522	NR	NR
	Fd	BX		7142 - D225	MD225	R40H5010	R40H5522	NR	NR
	Fd	BX		7108 - D184	MD184	R40H5010	R40H5519	NR	NR
	Fd	BX		7142 - D225	MD225	R40H5010	R40H5522	NR	NR
	Rd	BX		7108 - D184	MD184	R40H5010	R40H5519	NR	NR
	Rd	BX		7142 - D225	MD225	R40H5010	R40H5522	NR	NR
	Rd	BX		7108 - D184	MD184	R40H5010	R40H5519	NR	NR
	Rd	BX		7108 - D184	MD184	R40H5010	R40H5519	NR	NR
	Rd	BX		7142 - D225	MD225	R40H5010	R40H5522	NR	NR
	Rd	BX		7142 - D225	MD225	R40H5010	R40H5522	NR	NR
	Rd	BX		7142 - D225	MD225	R40H5010	R40H5522	NR	NR
1992									
	Fd	BX		7142 - D225	MD225	R40H5010	R40H5522	NR	NR
	Fd	BX		7108 - D184	MD184	R40H5010	R40H5519	NR	NR
	Rd	BX		7108 - D184	MD184	R40H5010	R40H5519	NR	NR
	Rd	BX		7142 - D225	MD225	R40H5010	R40H5522	NR	NR
FL70									
2004									
	Fd	Bosch		7654 - D786	MD786A	R4011754	NR	NR	NR
	Fd	Bosch		7655 - D786	MD786	R4011754	NR	NR	NR
	Rd	Bosch		7655 - D786	MD786	R4011754	NR	NR	NR
	Rd	Bosch		7654 - D786	MD786A	R4011754	NR	NR	NR
2003									
	Fd	Bosch		7655 - D786	MD786	R4011754	NR	NR	NR
	Fd	Bosch		7654 - D786	MD786A	R4011754	NR	NR	NR
	Rd	Bosch		7655 - D786	MD786	R4011754	NR	NR	NR
	Rd	Bosch		7654 - D786	MD786A	R4011754	NR	NR	NR
2002									
	Fd	Bosch		7654 - D786	MD786A	R4011754	NR	NR	NR
	Fd	Bosch		7655 - D786	MD786	R4011754	NR	NR	NR
	Rd	Bosch		7654 - D786	MD786A	R4011754	NR	NR	NR
	Rd	Bosch		7655 - D786	MD786	R4011754	NR	NR	NR
2001									
	Fd	Bosch		7654 - D786	MD786A	R4011754	NR	NR	NR
	Fd	Bosch		7655 - D786	MD786	R4011754	NR	NR	NR
	Rd	Bosch		7654 - D786	MD786A	R4011754	NR	NR	NR
	Rd	Bosch		7655 - D786	MD786	R4011754	NR	NR	NR

72 - Phenolic/Steel Face

356 - Single Hydraulic System, Bosch Cylinder, after Serial No. Q20000, 18,500lb. Rear Axle

365 - Caliper Loaded with Hardware and Disc Pads

MERITOR DRUM OR ROTOR NO.	CALIPER OR CYLINDER BORE SIZE	MERITOR CALIPER OR WHEEL CYLINDER (LEFT)	MERITOR CALIPER OR WHEEL CYLINDER (RIGHT)	MERITOR CALIPER OR WHEEL CYLINDER REPAIR KIT	MERITOR CALIPER PISTON	MERITOR MASTER CYLINDER	MERITOR MASTER CYLINDER KIT	MERITOR BRAKE HOSE (LEFT)	MERITOR BRAKE HOSE (RIGHT)
FREIGHTLINER(Cont.)									
FL60(Cont.)									
-	66mm	R424153263	R424153263[356]	R4011752	R4011751[72]	-	-	-	-
-	2-7/8 "	R4255656	R4255656	R4066365	R4090096[72]	-	-	-	-
-	2-19/32 "	R4255313	R4255313	R40107771	R4090100P[72]	-	-	-	-
-	66mm	R424153263	R424153263[356]	R4011752	R4011751[72]	-	-	-	-
-	73mm	R424153216	R424153216[365]	R4011758	R4011757[72]	-	-	-	-
-	2-19/32 "	R4255313	R4255313	R40107771	R4090100P[72]	-	-	-	-
-	2-7/8 "	R4255656	R4255656	R4066365	R4090096[72]	-	-	-	-
-	2-7/8 "	R4255656	R4255656	R4066365	R4090096[72]	-	-	-	-
-	2-19/32 "	R4255313	R4255313	R40107771	R4090100P[72]	-	-	-	-
-	2-7/8 "	R4255656	R4255656	R4066365	R4090096[72]	-	-	-	-
-	2-19/32 "	R4255313	R4255313	R40107771	R4090100P[72]	-	-	-	-
-	2-7/8 "	R4255656	R4255656	R4066365	R4090096[72]	-	-	-	-
-	2-19/32 "	R4255313	R4255313	R40107771	R4090100P[72]	-	-	-	-
-	2-19/32 "	R4255313	R4255313	R40107771	R4090100P[72]	-	-	-	-
-	2-7/8 "	R4255656	R4255656	R4066365	R4090096[72]	-	-	-	-
-	2-19/32 "	R4255313	R4255313	R40107771	R4090100P[72]	-	-	-	-
-	2-7/8 "	R4255656	R4255656	R4066365	R4090096[72]	-	-	-	-
N/A	2-7/8 "	R4255656	R4255656	R4066365	R4090096[72]	-	-	-	-
N/A	2-19/32 "	R42R55314	R42R55314	R40107771	R4090100P[72]	-	-	-	-
N/A	2-19/32 "	R42R55314	R42R55314	R40107771	R4090100P[72]	-	-	-	-
N/A	2-7/8 "	R4255656	R4255656	R4066365	R4090096[72]	-	-	-	-
N/A	2-7/8 "	R4255656	R4255656	R4066365	R4090096[72]	-	-	-	-
N/A	2-19/32 "	R42R55314	R42R55314	R40107771	R4090100P[72]	-	-	-	-
N/A	2-7/8 "	R4255656	R4255656	R4066365	R4090096[72]	-	-	-	-
N/A	2-19/32 "	R42R55314	R42R55314	R40107771	R4090100P[72]	-	-	-	-
N/A	2-7/8 "	R4255656	R4255656	R4066365	R4090096[72]	-	-	-	-
N/A	2-19/32 "	R42R55314	R42R55314	R40107771	R4090100P[72]	-	-	-	-
N/A	2-19/32 "	R42R55314	R42R55314	R40107771	R4090100P[72]	-	-	-	-
N/A	2-7/8 "	R4255656	R4255656	R4066365	R4090096[72]	-	-	-	-
N/A	2-7/8 "	R4255656	R4255656	R4066365	R4090096[72]	-	-	-	-
N/A	2-7/8 "	R4255656	R4255656	R4066365	R4090096[72]	-	-	-	-
N/A	2-7/8 "	R4255656	R4255656	R4066365	R4090096[72]	-	-	-	-
N/A	2-19/32 "	R42R55314	R42R55314	R40107771	R4090100P[72]	-	-	-	-
N/A	2-19/32 "	R42R55314	R42R55314	R40107771	R4090100P[72]	-	-	-	-
N/A	2-7/8 "	R4255656	R4255656	R4066365	R4090096[72]	-	-	-	-
FL70									
-	66mm	R424153263	R424153263[356]	R4011752	R4011751	-	-	-	-
-	73mm	R424153216	R424153216[365]	R4011758	R4011757	-	-	-	-
-	73mm	R424153216	R424153216[365]	R4011758	R4011757	-	-	-	-
-	66mm	R424153263	R424153263[356]	R4011752	R4011751	-	-	-	-
-	73mm	R424153216	R424153216[365]	R4011758	R4011757	-	-	-	-
-	66mm	R424153263	R424153263[356]	R4011752	R4011751	-	-	-	-
-	73mm	R424153216	R424153216[365]	R4011758	R4011757	-	-	-	-
-	66mm	R424153263	R424153263[356]	R4011752	R4011751	-	-	-	-
-	66mm	R424153263	R424153263[356]	R4011752	R4011751	-	-	-	-
-	66mm	R424153263	R424153263[356]	R4011752	R4011751	-	-	-	-
-	73mm	R424153216	R424153216[365]	R4011758	R4011757	-	-	-	-
-	66mm	R424153263	R424153263[356]	R4011752	R4011751	-	-	-	-
-	73mm	R424153216	R424153216[365]	R4011758	R4011757	-	-	-	-
-	66mm	R424153263	R424153263[356]	R4011752	R4011751[72]	-	-	-	-
-	73mm	R424153216	R424153216[365]	R4011758	R4011757[72]	-	-	-	-
-	66mm	R424153263	R424153263[356]	R4011752	R4011751[72]	-	-	-	-
-	73mm	R424153216	R424153216[365]	R4011758	R4011757[72]	-	-	-	-

MAKE MODEL YEAR AXLE CODE AXLE WEIGHT	AXLE & BRK. TYPE	BRK. MFG.	BRAKE SIZE	FMSI	MERITOR DISC PAD OR BRAKE SHOE	MERITOR GUIDE PIN OR RETURN SPRING KIT	MERITOR CALIPER HWD. KIT OR RETURN SPRING KIT	MERITOR ADJUSTER KIT (LEFT WHEEL)	MERITOR ADJUSTER KIT (RIGHT WHEEL)
FREIGHTLINER(Cont.)									
FL70(Cont.)									
2000									
	Fd	Bosch		7655 - D786	MD786	R4011754	NR	NR	NR
	Fd	Bosch		7654 - D786	MD786A	R4011754	NR	NR	NR
	Fd	BX		7815 - D380	MD184	R40H5010	R40H5519	NR	NR
	Fd	BX		7142 - D225	MD225	R40H5010	R40H5522	NR	NR
	Rd	Bosch		7654 - D786	MD786A	R4011754	NR	NR	NR
	Rd	Bosch		7655 - D786	MD786	R4011754	NR	NR	NR
	Rd	BX		7142 - D225	MD225	R40H5010	R40H5522	NR	NR
	Rd	BX		7815 - D380	MD184	R40H5010	R40H5519	NR	NR
1999									
	Fd	BX		7815 - D380	MD184	R40H5010	R40H5519	NR	NR
	Fd	BX		7142 - D225	MD225	R40H5010	R40H5522	NR	NR
	Rd	BX		7815 - D380	MD184	R40H5010	R40H5519	NR	NR
	Rd	BX		7142 - D225	MD225	R40H5010	R40H5522	NR	NR
1998									
	Fd	BX		7142 - D225	MD225	R40H5010	R40H5522	NR	NR
	Fd	BX		7815 - D380	MD184	R40H5010	R40H5519	NR	NR
	Rd	BX		7815 - D380	MD184	R40H5010	R40H5519	NR	NR
	Rd	BX		7142 - D225	MD225	R40H5010	R40H5522	NR	NR
1997									
	Fd	BX		7815 - D380	MD184	R40H5010	R40H5519	NR	NR
	Fd	BX		7142 - D225	MD225	R40H5010	R40H5522	NR	NR
	Rd	BX		7815 - D380	MD184	R40H5010	R40H5519	NR	NR
	Rd	BX		7142 - D225	MD225	R40H5010	R40H5522	NR	NR
1996									
	Fd	BX		7108 - D184	MD184	R40H5010	R40H5519	NR	NR
	Fd	BX		7142 - D225	MD225	R40H5010	R40H5522	NR	NR
	Fd	BX		7142 - D225	MD225	R40H5010	R40H5522	NR	NR
	Fd	BX		7108 - D184	MD184	R40H5010	R40H5519	NR	NR
	Fd	BX		7108 - D184	MD184	R40H5010	R40H5519	NR	NR
	Fd	BX		7142 - D225	MD225	R40H5010	R40H5522	NR	NR
	Fd	BX		7142 - D225	MD225	R40H5010	R40H5522	NR	NR
	Rd	BX		7142 - D225	MD225	R40H5010	R40H5522	NR	NR
	Rd	BX		7142 - D225	MD225	R40H5010	R40H5522	NR	NR
	Rd	BX		7108 - D184	MD184	R40H5010	R40H5519	NR	NR
	Rd	BX		7108 - D184	MD184	R40H5010	R40H5519	NR	NR
	Rd	BX		7108 - D184	MD184	R40H5010	R40H5519	NR	NR
	Rd	BX		7142 - D225	MD225	R40H5010	R40H5522	NR	NR
	Rd	BX		7142 - D225	MD225	R40H5010	R40H5522	NR	NR
1992									
	Fd	BX		7108 - D184	MD184	R40H5010	R40H5519	NR	NR
	Fd	BX		7142 - D225	MD225	R40H5010	R40H5522	NR	NR
	Rd	BX		7108 - D184	MD184	R40H5010	R40H5519	NR	NR
	Rd	BX		7142 - D225	MD225	R40H5010	R40H5522	NR	NR
FW700									
2006									
	Fd	Bosch		7654 - D786	MD786A	R4011754	NR	NR	NR
	Fd	Bosch		7655 - D786	MD786	R4011754	NR	NR	NR
	Fd	Bosch		7655 - D786	MD786	R4011754	NR	NR	NR
	Fd	Bosch		7654 - D786	MD786A	R4011754	NR	NR	NR
	Fd	Bosch		7654 - D786	MD786A	R4011754	NR	NR	NR
	Fd	Bosch		7655 - D786	MD786	R4011754	NR	NR	NR
	Fd	Bosch		7654 - D786	MD786A	R4011754	NR	NR	NR
	Fd	Bosch		7655 - D786	MD786	R4011754	NR	NR	NR
	Rd	Bosch		7654 - D786	MD786A	R4011754	NR	NR	NR
	Rd	Bosch		7655 - D786	MD786	R4011754	NR	NR	NR
	Rd	Bosch		7654 - D786	MD786A	R4011754	NR	NR	NR
	Rd	Bosch		7654 - D786	MD786A	R4011754	NR	NR	NR
	Rd	Bosch		7655 - D786	MD786	R4011754	NR	NR	NR
	Rd	Bosch		7655 - D786	MD786	R4011754	NR	NR	NR
	Rd	Bosch		7654 - D786	MD786A	R4011754	NR	NR	NR
	Rd	Bosch		7655 - D786	MD786	R4011754	NR	NR	NR
2005									
	Fd	Bosch		7655 - D786	MD786	R4011754	NR	NR	NR

72 - Phenolic/Steel Face

356 - Single Hydraulic System, Bosch Cylinder, after Serial No. Q20000, 18,500lb. Rear Axle

365 - Caliper Loaded with Hardware and Disc Pads

387 - 10 Hole Rotor

388 - 5 Hole Rotor

391 - 6 Hole Rotor

MERITOR DRUM OR ROTOR NO.	CALIPER OR CYLINDER BORE SIZE	MERITOR CALIPER OR WHEEL CYLINDER (LEFT)	MERITOR CALIPER OR WHEEL CYLINDER (RIGHT)	MERITOR CALIPER OR WHEEL CYLINDER REPAIR KIT	MERITOR CALIPER PISTON	MERITOR MASTER CYLINDER	MERITOR MASTER CYLINDER KIT	MERITOR BRAKE HOSE (LEFT)	MERITOR BRAKE HOSE (RIGHT)
FREIGHTLINER(Cont.)									
FL70(Cont.)									
-	73mm	R424153216	R424153216[365]	R4011758	R4011757[72]	-	-	-	-
-	66mm	R424153263	R424153263[356]	R4011752	R4011751[72]	-	-	-	-
-	2-19/32 "	R4255313	R4255313	R40107771	R4090100P[72]	-	-	-	-
-	2-7/8 "	R4255656	R4255656	R4066365	R4090096[72]	-	-	-	-
-	66mm	R424153263	R424153263[356]	R4011752	R4011751[72]	-	-	-	-
-	73mm	R424153216	R424153216[365]	R4011758	R4011757[72]	-	-	-	-
-	2-7/8 "	R4255656	R4255656	R4066365	R4090096[72]	-	-	-	-
-	2-19/32 "	R4255313	R4255313	R40107771	R4090100P[72]	-	-	-	-
-	2-19/32 "	R4255313	R4255313	R40107771	R4090100P[72]	-	-	-	-
-	2-7/8 "	R4255656	R4255656	R4066365	R4090096[72]	-	-	-	-
-	2-19/32 "	R4255313	R4255313	R40107771	R4090100P[72]	-	-	-	-
-	2-7/8 "	R4255656	R4255656	R4066365	R4090096[72]	-	-	-	-
-	2-7/8 "	R4255656	R4255656	R4066365	R4090096[72]	-	-	-	-
-	2-19/32 "	R4255313	R4255313	R40107771	R4090100P[72]	-	-	-	-
-	2-19/32 "	R4255313	R4255313	R40107771	R4090100P[72]	-	-	-	-
-	2-7/8 "	R4255656	R4255656	R4066365	R4090096[72]	-	-	-	-
-	2-19/32 "	R4255313	R4255313	R40107771	R4090100P[72]	-	-	-	-
-	2-7/8 "	R4255656	R4255656	R4066365	R4090096[72]	-	-	-	-
N/A	2-19/32 "	R42R55314	R42R55314	R40107771	R4090100P[72]	-	-	-	-
N/A	2-7/8 "	R4255656	R4255656	R4066365	R4090096[72]	-	-	-	-
N/A	2-7/8 "	R4255656	R4255656	R4066365	R4090096[72]	-	-	-	-
N/A	2-19/32 "	R42R55314	R42R55314	R40107771	R4090100P[72]	-	-	-	-
N/A	2-19/32 "	R42R55314	R42R55314	R40107771	R4090100P[72]	-	-	-	-
N/A	2-7/8 "	R4255656	R4255656	R4066365	R4090096[72]	-	-	-	-
N/A	2-7/8 "	R4255656	R4255656	R4066365	R4090096[72]	-	-	-	-
N/A	2-7/8 "	R4255656	R4255656	R4066365	R4090096[72]	-	-	-	-
N/A	2-7/8 "	R4255656	R4255656	R4066365	R4090096[72]	-	-	-	-
N/A	2-19/32 "	R42R55314	R42R55314	R40107771	R4090100P[72]	-	-	-	-
N/A	2-19/32 "	R42R55314	R42R55314	R40107771	R4090100P[72]	-	-	-	-
N/A	2-19/32 "	R42R55314	R42R55314	R40107771	R4090100P[72]	-	-	-	-
N/A	2-7/8 "	R4255656	R4255656	R4066365	R4090096[72]	-	-	-	-
N/A	2-7/8 "	R4255656	R4255656	R4066365	R4090096[72]	-	-	-	-
N/A	2-19/32 "	R42R55314	R42R55314	R40107771	R4090100P[72]	-	-	-	-
N/A	2-7/8 "	R4255656	R4255656	R4066365	R4090096[72]	-	-	-	-
N/A	2-19/32 "	R42R55314	R42R55314	R40107771	R4090100P[72]	-	-	-	-
N/A	2-7/8 "	R4255656	R4255656	R4066365	R4090096[72]	-	-	-	-
FW700									
23-123550-004[387]	66mm	R424153263	R424153263[356]	R4011752	R4011751[72]	-	-	-	-
23-123552-004[387]	73mm	R424153216	R424153216[365]	R4011758	R4011757[72]	-	-	-	-
23-123572-004[391]	73mm	R424153216	R424153216[365]	R4011758	R4011757[72]	-	-	-	-
R44141476[388]	66mm	R424153263	R424153263[356]	R4011752	R4011751[72]	-	-	-	-
23-123552-004[387]	66mm	R424153263	R424153263[356]	R4011752	R4011751[72]	-	-	-	-
R44141476[388]	73mm	R424153216	R424153216[365]	R4011758	R4011757[72]	-	-	-	-
23-123572-004[391]	66mm	R424153263	R424153263[356]	R4011752	R4011751[72]	-	-	-	-
23-123550-004[387]	73mm	R424153216	R424153216[365]	R4011758	R4011757[72]	-	-	-	-
23-123550-004[387]	66mm	R424153263	R424153263[356]	R4011752	R4011751[72]	-	-	-	-
R44141476[388]	73mm	R424153216	R424153216[365]	R4011758	R4011757[72]	-	-	-	-
23-123552-004[387]	66mm	R424153263	R424153263[356]	R4011752	R4011751[72]	-	-	-	-
R44141476[388]	66mm	R424153263	R424153263[356]	R4011752	R4011751[72]	-	-	-	-
23-123572-004[391]	73mm	R424153216	R424153216[365]	R4011758	R4011757[72]	-	-	-	-
23-123552-004[387]	73mm	R424153216	R424153216[365]	R4011758	R4011757[72]	-	-	-	-
23-123572-004[391]	66mm	R424153263	R424153263[356]	R4011752	R4011751[72]	-	-	-	-
23-123550-004[387]	73mm	R424153216	R424153216[365]	R4011758	R4011757[72]	-	-	-	-
R44141476[388]	73mm	R424153216	R424153216[365]	R4011758	R4011757[72]	-	-	-	-

MAKE MODEL YEAR AXLE CODE AXLE WEIGHT	AXLE & BRK. TYPE	BRK. MFG.	BRAKE SIZE	FMSI	MERITOR DISC PAD OR BRAKE SHOE	MERITOR GUIDE PIN OR RETURN SPRING KIT	MERITOR CALIPER HWD. KIT OR RETURN SPRING KIT	MERITOR ADJUSTER KIT (LEFT WHEEL)	MERITOR ADJUSTER KIT (RIGHT WHEEL)
FREIGHTLINER(Cont.)									
FW700(Cont.)									
2005									
	Fd	Bosch		7655 - D786	MD786	R4011754	NR	NR	NR
	Fd	Bosch		7655 - D786	MD786	R4011754	NR	NR	NR
	Fd	Bosch		7655 - D786	MD786	R4011754	NR	NR	NR
	Fd	Bosch		7654 - D786	MD786A	R4011754	NR	NR	NR
	Fd	Bosch		7654 - D786	MD786A	R4011754	NR	NR	NR
	Fd	Bosch		7654 - D786	MD786A	R4011754	NR	NR	NR
	Fd	Bosch		7654 - D786	MD786A	R4011754	NR	NR	NR
	Rd	Bosch		7655 - D786	MD786	R4011754	NR	NR	NR
	Rd	Bosch		7654 - D786	MD786A	R4011754	NR	NR	NR
	Rd	Bosch		7655 - D786	MD786	R4011754	NR	NR	NR
	Rd	Bosch		7655 - D786	MD786	R4011754	NR	NR	NR
	Rd	Bosch		7655 - D786	MD786	R4011754	NR	NR	NR
	Rd	Bosch		7654 - D786	MD786A	R4011754	NR	NR	NR
	Rd	Bosch		7654 - D786	MD786A	R4011754	NR	NR	NR
	Rd	Bosch		7654 - D786	MD786A	R4011754	NR	NR	NR
2004									
	Fd	Bosch		7654 - D786	MD786A	R4011754	NR	NR	NR
	Fd	Bosch		7655 - D786	MD786	R4011754	NR	NR	NR
	Fd	Bosch		7655 - D786	MD786	R4011754	NR	NR	NR
	Fd	Bosch		7654 - D786	MD786A	R4011754	NR	NR	NR
	Fd	Bosch		7655 - D786	MD786	R4011754	NR	NR	NR
	Fd	Bosch		7654 - D786	MD786A	R4011754	NR	NR	NR
	Fd	Bosch		7654 - D786	MD786A	R4011754	NR	NR	NR
	Fd	Bosch		7655 - D786	MD786	R4011754	NR	NR	NR
	Rd	Bosch		7655 - D786	MD786	R4011754	NR	NR	NR
	Rd	Bosch		7655 - D786	MD786	R4011754	NR	NR	NR
	Rd	Bosch		7655 - D786	MD786	R4011754	NR	NR	NR
	Rd	Bosch		7655 - D786	MD786	R4011754	NR	NR	NR
	Rd	Bosch		7654 - D786	MD786A	R4011754	NR	NR	NR
	Rd	Bosch		7654 - D786	MD786A	R4011754	NR	NR	NR
	Rd	Bosch		7654 - D786	MD786A	R4011754	NR	NR	NR
	Rd	Bosch		7654 - D786	MD786A	R4011754	NR	NR	NR
M2									
2006									
4x2 106 BBC	Fd	Bosch		7655 - D786	MD786	R4011754	NR	NR	NR
	Fd	Bosch		7655 - D786	MD786	R4011754	NR	NR	NR
	Fd	Bosch		7655 - D786	MD786	R4011754	NR	NR	NR
	Fd	Bosch		7655 - D786	MD786	R4011754	NR	NR	NR
	Fd	Bosch		7654 - D786	MD786A	R4011754	NR	NR	NR
	Fd	Bosch		7654 - D786	MD786A	R4011754	NR	NR	NR
	Fd	Bosch		7654 - D786	MD786A	R4011754	NR	NR	NR
	Fd	Bosch		7654 - D786	MD786A	R4011754	NR	NR	NR
	Rd	Bosch		7655 - D786	MD786	R4011754	NR	NR	NR
	Rd	Bosch		7655 - D786	MD786	R4011754	NR	NR	NR
	Rd	Bosch		7655 - D786	MD786	R4011754	NR	NR	NR
	Rd	Bosch		7655 - D786	MD786	R4011754	NR	NR	NR
	Rd	Bosch		7654 - D786	MD786A	R4011754	NR	NR	NR
	Rd	Bosch		7654 - D786	MD786A	R4011754	NR	NR	NR
	Rd	Bosch		7654 - D786	MD786A	R4011754	NR	NR	NR
	Rd	Bosch		7654 - D786	MD786A	R4011754	NR	NR	NR
2005									
	Fd	Bosch		7655 - D786	MD786	R4011754	NR	NR	NR
	Fd	Bosch		7655 - D786	MD786	R4011754	NR	NR	NR
	Fd	Bosch		7654 - D786	MD786A	R4011754	NR	NR	NR
	Fd	Bosch		7655 - D786	MD786	R4011754	NR	NR	NR
	Fd	Bosch		7655 - D786	MD786	R4011754	NR	NR	NR
	Fd	Bosch		7654 - D786	MD786A	R4011754	NR	NR	NR
	Fd	Bosch		7654 - D786	MD786A	R4011754	NR	NR	NR
	Fd	Bosch		7654 - D786	MD786A	R4011754	NR	NR	NR
	Rd	Bosch		7655 - D786	MD786	R4011754	NR	NR	NR
	Rd	Bosch		7655 - D786	MD786	R4011754	NR	NR	NR
	Rd	Bosch		7655 - D786	MD786	R4011754	NR	NR	NR
	Rd	Bosch		7655 - D786	MD786	R4011754	NR	NR	NR
	Rd	Bosch		7654 - D786	MD786A	R4011754	NR	NR	NR

72 - Phenolic/Steel Face

356 - Single Hydraulic System, Bosch Cylinder, after Serial No. Q20000, 18,500lb. Rear Axle

365 - Caliper Loaded with Hardware and Disc Pads

387 - 10 Hole Rotor

388 - 5 Hole Rotor

391 - 6 Hole Rotor

MERITOR DRUM OR ROTOR NO.	CALIPER OR CYLINDER BORE SIZE	MERITOR CALIPER OR WHEEL CYLINDER (LEFT)	MERITOR CALIPER OR WHEEL CYLINDER (RIGHT)	MERITOR CALIPER OR WHEEL CYLINDER REPAIR KIT	MERITOR CALIPER PISTON	MERITOR MASTER CYLINDER	MERITOR MASTER CYLINDER KIT	MERITOR BRAKE HOSE (LEFT)	MERITOR BRAKE HOSE (RIGHT)
FREIGHTLINER(Cont.)									
FW700(Cont.)									
23-123572-004[391]	73mm	R424153216	R424153216[365]	R4011758	R4011757[72]	-	-	-	-
23-123552-004[387]	73mm	R424153216	R424153216[365]	R4011758	R4011757[72]	-	-	-	-
23-123550-004[387]	73mm	R424153216	R424153216[365]	R4011758	R4011757[72]	-	-	-	-
23-123552-004[387]	66mm	R424153263	R424153263[356]	R4011752	R4011751[72]	-	-	-	-
23-123550-004[387]	66mm	R424153263	R424153263[356]	R4011752	R4011751[72]	-	-	-	-
R44141476[388]	66mm	R424153263	R424153263[356]	R4011752	R4011751[72]	-	-	-	-
23-123572-004[391]	66mm	R424153263	R424153263[356]	R4011752	R4011751[72]	-	-	-	-
23-123572-004[391]	73mm	R424153216	R424153216[365]	R4011758	R4011757[72]	-	-	-	-
23-123552-004[387]	66mm	R424153263	R424153263[356]	R4011752	R4011751[72]	-	-	-	-
R44141476[388]	73mm	R424153216	R424153216[365]	R4011758	R4011757[72]	-	-	-	-
23-123550-004[387]	73mm	R424153216	R424153216[365]	R4011758	R4011757[72]	-	-	-	-
23-123552-004[387]	73mm	R424153216	R424153216[365]	R4011758	R4011757[72]	-	-	-	-
R44141476[388]	66mm	R424153263	R424153263[356]	R4011752	R4011751[72]	-	-	-	-
23-123572-004[391]	66mm	R424153263	R424153263[356]	R4011752	R4011751[72]	-	-	-	-
23-123550-004[387]	66mm	R424153263	R424153263[356]	R4011752	R4011751[72]	-	-	-	-
23-123552-004[387]	66mm	R424153263	R424153263[356]	R4011752	R4011751[72]	-	-	-	-
23-123572-004[391]	73mm	R424153216	R424153216[365]	R4011758	R4011757[72]	-	-	-	-
R44141476[388]	73mm	R424153216	R424153216[365]	R4011758	R4011757[72]	-	-	-	-
R44141476[388]	66mm	R424153263	R424153263[356]	R4011752	R4011751[72]	-	-	-	-
23-123552-004[387]	73mm	R424153216	R424153216[365]	R4011758	R4011757[72]	-	-	-	-
23-123550-004[387]	66mm	R424153263	R424153263[356]	R4011752	R4011751[72]	-	-	-	-
23-123572-004[391]	66mm	R424153263	R424153263[356]	R4011752	R4011751[72]	-	-	-	-
23-123550-004[387]	73mm	R424153216	R424153216[365]	R4011758	R4011757[72]	-	-	-	-
23-123552-004[387]	73mm	R424153216	R424153216[365]	R4011758	R4011757[72]	-	-	-	-
23-123572-004[391]	73mm	R424153216	R424153216[365]	R4011758	R4011757[72]	-	-	-	-
23-123550-004[387]	73mm	R424153216	R424153216[365]	R4011758	R4011757[72]	-	-	-	-
R44141476[388]	73mm	R424153216	R424153216[365]	R4011758	R4011757[72]	-	-	-	-
R44141476[388]	66mm	R424153263	R424153263[356]	R4011752	R4011751[72]	-	-	-	-
23-123550-004[387]	66mm	R424153263	R424153263[356]	R4011752	R4011751[72]	-	-	-	-
23-123572-004[391]	66mm	R424153263	R424153263[356]	R4011752	R4011751[72]	-	-	-	-
23-123552-004[387]	66mm	R424153263	R424153263[356]	R4011752	R4011751[72]	-	-	-	-
M2									
23-123572-004[391]	73mm	R424153216	R424153216[365]	R4011758	R4011757[72]	-	-	-	-
23-123552-004[387]	73mm	R424153216	R424153216[365]	R4011758	R4011757[72]	-	-	-	-
R44141476[388]	73mm	R424153216	R424153216[365]	R4011758	R4011757[72]	-	-	-	-
23-123550-004[387]	73mm	R424153216	R424153216[365]	R4011758	R4011757[72]	-	-	-	-
23-123550-004[387]	66mm	R424153263	R424153263[356]	R4011752	R4011751[72]	-	-	-	-
R44141476[388]	66mm	R424153263	R424153263[356]	R4011752	R4011751[72]	-	-	-	-
23-123552-004[387]	66mm	R424153263	R424153263[356]	R4011752	R4011751[72]	-	-	-	-
23-123572-004[391]	66mm	R424153263	R424153263[356]	R4011752	R4011751[72]	-	-	-	-
23-123552-004[387]	73mm	R424153216	R424153216[365]	R4011758	R4011757[72]	-	-	-	-
23-123572-004[391]	73mm	R424153216	R424153216[365]	R4011758	R4011757[72]	-	-	-	-
R44141476[388]	73mm	R424153216	R424153216[365]	R4011758	R4011757[72]	-	-	-	-
23-123550-004[387]	73mm	R424153216	R424153216[365]	R4011758	R4011757[72]	-	-	-	-
23-123550-004[387]	66mm	R424153263	R424153263[356]	R4011752	R4011751[72]	-	-	-	-
R44141476[388]	66mm	R424153263	R424153263[356]	R4011752	R4011751[72]	-	-	-	-
23-123572-004[391]	66mm	R424153263	R424153263[356]	R4011752	R4011751[72]	-	-	-	-
23-123552-004[387]	66mm	R424153263	R424153263[356]	R4011752	R4011751[72]	-	-	-	-
R44141476[388]	73mm	R424153216	R424153216[365]	R4011758	R4011757[72]	-	-	-	-
23-123552-004[387]	73mm	R424153216	R424153216[365]	R4011758	R4011757[72]	-	-	-	-
23-123552-004[387]	66mm	R424153263	R424153263[356]	R4011752	R4011751[72]	-	-	-	-
23-123572-004[391]	73mm	R424153216	R424153216[365]	R4011758	R4011757[72]	-	-	-	-
23-123550-004[387]	73mm	R424153216	R424153216[365]	R4011758	R4011757[72]	-	-	-	-
R44141476[388]	66mm	R424153263	R424153263[356]	R4011752	R4011751[72]	-	-	-	-
23-123550-004[387]	66mm	R424153263	R424153263[356]	R4011752	R4011751[72]	-	-	-	-
23-123572-004[391]	66mm	R424153263	R424153263[356]	R4011752	R4011751[72]	-	-	-	-
23-123552-004[387]	73mm	R424153216	R424153216[365]	R4011758	R4011757[72]	-	-	-	-
23-123572-004[391]	73mm	R424153216	R424153216[365]	R4011758	R4011757[72]	-	-	-	-
23-123550-004[387]	73mm	R424153216	R424153216[365]	R4011758	R4011757[72]	-	-	-	-
R44141476[388]	73mm	R424153216	R424153216[365]	R4011758	R4011757[72]	-	-	-	-
R44141476[388]	66mm	R424153263	R424153263[356]	R4011752	R4011751[72]	-	-	-	-

MAKE MODEL YEAR AXLE CODE AXLE WEIGHT	AXLE & BRK. TYPE	BRK. MFG.	BRAKE SIZE	FMSI	MERITOR DISC PAD OR BRAKE SHOE	MERITOR GUIDE PIN OR RETURN SPRING KIT	MERITOR CALIPER HWD. KIT OR RETURN SPRING KIT	MERITOR ADJUSTER KIT (LEFT WHEEL)	MERITOR ADJUSTER KIT (RIGHT WHEEL)
FREIGHTLINER(Cont.)									
M2(Cont.)									
2005									
	Rd	Bosch		7654 - D786	MD786A	R4011754	NR	NR	NR
	Rd	Bosch		7654 - D786	MD786A	R4011754	NR	NR	NR
	Rd	Bosch		7654 - D786	MD786A	R4011754	NR	NR	NR
2004									
	Fd	Bosch		7654 - D786	MD786A	R4011754	NR	NR	NR
	Fd	Bosch		7655 - D786	MD786	R4011754	NR	NR	NR
	Fd	Bosch		7655 - D786	MD786	R4011754	NR	NR	NR
	Fd	Bosch		7654 - D786	MD786A	R4011754	NR	NR	NR
	Fd	Bosch		7654 - D786	MD786A	R4011754	NR	NR	NR
	Fd	Bosch		7655 - D786	MD786	R4011754	NR	NR	NR
	Fd	Bosch		7655 - D786	MD786	R4011754	NR	NR	NR
	Fd	Bosch		7654 - D786	MD786A	R4011754	NR	NR	NR
	Rd	Bosch		7655 - D786	MD786	R4011754	NR	NR	NR
	Rd	Bosch		7655 - D786	MD786	R4011754	NR	NR	NR
	Rd	Bosch		7655 - D786	MD786	R4011754	NR	NR	NR
	Rd	Bosch		7654 - D786	MD786A	R4011754	NR	NR	NR
	Rd	Bosch		7654 - D786	MD786A	R4011754	NR	NR	NR
	Rd	Bosch		7655 - D786	MD786	R4011754	NR	NR	NR
	Rd	Bosch		7654 - D786	MD786A	R4011754	NR	NR	NR
	Rd	Bosch		7654 - D786	MD786A	R4011754	NR	NR	NR
MB50									
1996									
	Fd	BX		7142 - D225	MD225	R40H5010	R40H5522	NR	NR
	Fd	BX		7108 - D184	MD184	R40H5010	R40H5519	NR	NR
	Fd	BX		7108 - D184	MD184	R40H5010	R40H5519	NR	NR
	Fd	BX		7142 - D225	MD225	R40H5010	R40H5522	NR	NR
	Fd	BX		7142 - D225	MD225	R40H5010	R40H5522	NR	NR
	Fd	BX		7108 - D184	MD184	R40H5010	R40H5519	NR	NR
	Fd	BX		7142 - D225	MD225	R40H5010	R40H5522	NR	NR
	Rd	BX		7142 - D225	MD225	R40H5010	R40H5522	NR	NR
	Rd	BX		7108 - D184	MD184	R40H5010	R40H5519	NR	NR
	Rd	BX		7108 - D184	MD184	R40H5010	R40H5519	NR	NR
	Rd	BX		7142 - D225	MD225	R40H5010	R40H5522	NR	NR
	Rd	BX		7142 - D225	MD225	R40H5010	R40H5522	NR	NR
	Rd	BX		7108 - D184	MD184	R40H5010	R40H5519	NR	NR
	Rd	BX		7142 - D225	MD225	R40H5010	R40H5522	NR	NR
1992									
	Fd	BX		7108 - D184	MD184	R40H5010	R40H5519	NR	NR
	Fd	BX		7142 - D225	MD225	R40H5010	R40H5522	NR	NR
	Rd	BX		7142 - D225	MD225	R40H5010	R40H5522	NR	NR
	Rd	BX		7108 - D184	MD184	R40H5010	R40H5519	NR	NR
MB60									
1996									
	Fd	BX		7142 - D225	MD225	R40H5010	R40H5522	NR	NR
	Fd	BX		7142 - D225	MD225	R40H5010	R40H5522	NR	NR
	Fd	BX		7142 - D225	MD225	R40H5010	R40H5522	NR	NR
	Fd	BX		7108 - D184	MD184	R40H5010	R40H5519	NR	NR
	Fd	BX		7108 - D184	MD184	R40H5010	R40H5519	NR	NR
	Fd	BX		7108 - D184	MD184	R40H5010	R40H5519	NR	NR
	Fd	BX		7142 - D225	MD225	R40H5010	R40H5522	NR	NR
	Rd	BX		7108 - D184	MD184	R40H5010	R40H5519	NR	NR
	Rd	BX		7142 - D225	MD225	R40H5010	R40H5522	NR	NR
	Rd	BX		7142 - D225	MD225	R40H5010	R40H5522	NR	NR
	Rd	BX		7108 - D184	MD184	R40H5010	R40H5519	NR	NR
	Rd	BX		7142 - D225	MD225	R40H5010	R40H5522	NR	NR
	Rd	BX		7108 - D184	MD184	R40H5010	R40H5519	NR	NR
	Rd	BX		7142 - D225	MD225	R40H5010	R40H5522	NR	NR
1992									
	Fd	BX		7108 - D184	MD184	R40H5010	R40H5519	NR	NR
	Fd	BX		7142 - D225	MD225	R40H5010	R40H5522	NR	NR
	Rd	BX		7108 - D184	MD184	R40H5010	R40H5519	NR	NR
	Rd	BX		7142 - D225	MD225	R40H5010	R40H5522	NR	NR

72 - Phenolic/Steel Face

356 - Single Hydraulic System, Bosch Cylinder, after Serial No. Q20000, 18,500lb. Rear Axle

365 - Caliper Loaded with Hardware and Disc Pads

387 - 10 Hole Rotor

388 - 5 Hole Rotor

391 - 6 Hole Rotor

MERITOR DRUM OR ROTOR NO.	CALIPER OR CYLINDER BORE SIZE	MERITOR CALIPER OR WHEEL CYLINDER (LEFT)	MERITOR CALIPER OR WHEEL CYLINDER (RIGHT)	MERITOR CALIPER OR WHEEL CYLINDER REPAIR KIT	MERITOR CALIPER PISTON	MERITOR MASTER CYLINDER	MERITOR MASTER CYLINDER KIT	MERITOR BRAKE HOSE (LEFT)	MERITOR BRAKE HOSE (RIGHT)
FREIGHTLINER(Cont.)									
M2(Cont.)									
23-123550-004[387]	66mm	R424153263	R424153263[356]	R4011752	R4011751[72]	-	-	-	-
23-123552-004[387]	66mm	R424153263	R424153263[356]	R4011752	R4011751[72]	-	-	-	-
23-123572-004[391]	66mm	R424153263	R424153263[356]	R4011752	R4011751[72]	-	-	-	-
R44141476[388]	66mm	R424153263	R424153263[356]	R4011752	R4011751[72]	-	-	-	-
R44141476[388]	73mm	R424153216	R424153216[365]	R4011758	R4011757[72]	-	-	-	-
23-123552-004[387]	73mm	R424153216	R424153216[365]	R4011758	R4011757[72]	-	-	-	-
23-123552-004[387]	66mm	R424153263	R424153263[356]	R4011752	R4011751[72]	-	-	-	-
23-123550-004[387]	66mm	R424153263	R424153263[356]	R4011752	R4011751[72]	-	-	-	-
23-123572-004[391]	73mm	R424153216	R424153216[365]	R4011758	R4011757[72]	-	-	-	-
23-123550-004[387]	73mm	R424153216	R424153216[365]	R4011758	R4011757[72]	-	-	-	-
23-123572-004[391]	66mm	R424153263	R424153263[356]	R4011752	R4011751[72]	-	-	-	-
23-123572-004[391]	73mm	R424153216	R424153216[365]	R4011758	R4011757[72]	-	-	-	-
R44141476[388]	73mm	R424153216	R424153216[365]	R4011758	R4011757[72]	-	-	-	-
23-123552-004[387]	73mm	R424153216	R424153216[365]	R4011758	R4011757[72]	-	-	-	-
23-123572-004[391]	66mm	R424153263	R424153263[356]	R4011752	R4011751[72]	-	-	-	-
R44141476[388]	66mm	R424153263	R424153263[356]	R4011752	R4011751[72]	-	-	-	-
23-123550-004[387]	73mm	R424153216	R424153216[365]	R4011758	R4011757[72]	-	-	-	-
23-123552-004[387]	66mm	R424153263	R424153263[356]	R4011752	R4011751[72]	-	-	-	-
23-123550-004[387]	66mm	R424153263	R424153263[356]	R4011752	R4011751[72]	-	-	-	-
MB50									
N/A	2-7/8 "	R4255656	R4255656	R4066365	R4090096[72]	-	-	-	-
N/A	2-19/32 "	R42R55314	R42R55314	R40107771	R4090100P[72]	-	-	-	-
N/A	2-19/32 "	R42R55314	R42R55314	R40107771	R4090100P[72]	-	-	-	-
N/A	2-7/8 "	R4255656	R4255656	R4066365	R4090096[72]	-	-	-	-
N/A	2-7/8 "	R4255656	R4255656	R4066365	R4090096[72]	-	-	-	-
N/A	2-19/32 "	R42R55314	R42R55314	R40107771	R4090100P[72]	-	-	-	-
N/A	2-7/8 "	R4255656	R4255656	R4066365	R4090096[72]	-	-	-	-
N/A	2-7/8 "	R4255656	R4255656	R4066365	R4090096[72]	-	-	-	-
N/A	2-19/32 "	R42R55314	R42R55314	R40107771	R4090100P[72]	-	-	-	-
N/A	2-19/32 "	R42R55314	R42R55314	R40107771	R4090100P[72]	-	-	-	-
N/A	2-7/8 "	R4255656	R4255656	R4066365	R4090096[72]	-	-	-	-
N/A	2-7/8 "	R4255656	R4255656	R4066365	R4090096[72]	-	-	-	-
N/A	2-19/32 "	R42R55314	R42R55314	R40107771	R4090100P[72]	-	-	-	-
N/A	2-7/8 "	R4255656	R4255656	R4066365	R4090096[72]	-	-	-	-
N/A	2-19/32 "	R42R55314	R42R55314	R40107771	R4090100P[72]	-	-	-	-
N/A	2-7/8 "	R4255656	R4255656	R4066365	R4090096[72]	-	-	-	-
N/A	2-7/8 "	R4255656	R4255656	R4066365	R4090096[72]	-	-	-	-
N/A	2-19/32 "	R42R55314	R42R55314	R40107771	R4090100P[72]	-	-	-	-
MB60									
N/A	2-7/8 "	R4255656	R4255656	R4066365	R4090096[72]	-	-	-	-
N/A	2-7/8 "	R4255656	R4255656	R4066365	R4090096[72]	-	-	-	-
N/A	2-7/8 "	R4255656	R4255656	R4066365	R4090096[72]	-	-	-	-
N/A	2-19/32 "	R42R55314	R42R55314	R40107771	R4090100P[72]	-	-	-	-
N/A	2-19/32 "	R42R55314	R42R55314	R40107771	R4090100P[72]	-	-	-	-
N/A	2-19/32 "	R42R55314	R42R55314	R40107771	R4090100P[72]	-	-	-	-
N/A	2-7/8 "	R4255656	R4255656	R4066365	R4090096[72]	-	-	-	-
N/A	2-19/32 "	R42R55314	R42R55314	R40107771	R4090100P[72]	-	-	-	-
N/A	2-7/8 "	R4255656	R4255656	R4066365	R4090096[72]	-	-	-	-
N/A	2-7/8 "	R4255656	R4255656	R4066365	R4090096[72]	-	-	-	-
N/A	2-19/32 "	R42R55314	R42R55314	R40107771	R4090100P[72]	-	-	-	-
N/A	2-7/8 "	R4255656	R4255656	R4066365	R4090096[72]	-	-	-	-
N/A	2-19/32 "	R42R55314	R42R55314	R40107771	R4090100P[72]	-	-	-	-
N/A	2-7/8 "	R4255656	R4255656	R4066365	R4090096[72]	-	-	-	-
N/A	2-19/32 "	R42R55314	R42R55314	R40107771	R4090100P[72]	-	-	-	-
N/A	2-7/8 "	R4255656	R4255656	R4066365	R4090096[72]	-	-	-	-
N/A	2-19/32 "	R42R55314	R42R55314	R40107771	R4090100P[72]	-	-	-	-
N/A	2-7/8 "	R4255656	R4255656	R4066365	R4090096[72]	-	-	-	-

MAKE MODEL YEAR AXLE CODE AXLE WEIGHT	AXLE & BRK. TYPE	BRK. MFG.	BRAKE SIZE	FMSI	MERITOR DISC PAD OR BRAKE SHOE	MERITOR GUIDE PIN OR RETURN SPRING KIT	MERITOR CALIPER HWD. KIT OR RETURN SPRING KIT	MERITOR ADJUSTER KIT (LEFT WHEEL)	MERITOR ADJUSTER KIT (RIGHT WHEEL)
FREIGHTLINER(Cont.)									
MB70									
1996									
	Fd	BX		7108 - D184	MD184	R40H5010	R40H5519	NR	NR
	Fd	BX		7108 - D184	MD184	R40H5010	R40H5519	NR	NR
	Fd	BX		7142 - D225	MD225	R40H5010	R40H5522	NR	NR
	Fd	BX		7142 - D225	MD225	R40H5010	R40H5522	NR	NR
	Fd	BX		7142 - D225	MD225	R40H5010	R40H5522	NR	NR
	Fd	BX		7142 - D225	MD225	R40H5010	R40H5522	NR	NR
	Fd	BX		7108 - D184	MD184	R40H5010	R40H5519	NR	NR
	Rd	BX		7108 - D184	MD184	R40H5010	R40H5519	NR	NR
	Rd	BX		7142 - D225	MD225	R40H5010	R40H5522	NR	NR
	Rd	BX		7142 - D225	MD225	R40H5010	R40H5522	NR	NR
	Rd	BX		7108 - D184	MD184	R40H5010	R40H5519	NR	NR
	Rd	BX		7108 - D184	MD184	R40H5010	R40H5519	NR	NR
	Rd	BX		7142 - D225	MD225	R40H5010	R40H5522	NR	NR
	Rd	BX		7142 - D225	MD225	R40H5010	R40H5522	NR	NR
1992									
	Fd	BX		7142 - D225	MD225	R40H5010	R40H5522	NR	NR
	Fd	BX		7108 - D184	MD184	R40H5010	R40H5519	NR	NR
	Rd	BX		7108 - D184	MD184	R40H5010	R40H5519	NR	NR
	Rd	BX		7142 - D225	MD225	R40H5010	R40H5522	NR	NR
MT45									
2006									
	Fd	Bosch		7655 - D786	MD786	R4011754	NR	NR	NR
	Fd	Bosch		7655 - D786	MD786	R4011754	NR	NR	NR
	Fd	Bosch		7654 - D786	MD786A	R4011754	NR	NR	NR
	Fd	Bosch		7654 - D786	MD786A	R4011754	NR	NR	NR
	Fd	Bosch		7655 - D786	MD786	R4011754	NR	NR	NR
	Fd	Bosch		7654 - D786	MD786A	R4011754	NR	NR	NR
	Fd	Bosch		7654 - D786	MD786A	R4011754	NR	NR	NR
	Fd	Bosch		7655 - D786	MD786	R4011754	NR	NR	NR
	Rd	Bosch		7654 - D786	MD786A	R4011754	NR	NR	NR
	Rd	Bosch		7655 - D786	MD786	R4011754	NR	NR	NR
	Rd	Bosch		7655 - D786	MD786	R4011754	NR	NR	NR
	Rd	Bosch		7654 - D786	MD786A	R4011754	NR	NR	NR
	Rd	Bosch		7655 - D786	MD786	R4011754	NR	NR	NR
	Rd	Bosch		7654 - D786	MD786A	R4011754	NR	NR	NR
	Rd	Bosch		7654 - D786	MD786A	R4011754	NR	NR	NR
	Rd	Bosch		7655 - D786	MD786	R4011754	NR	NR	NR
2005									
	Fd	Bosch		7655 - D786	MD786	R4011754	NR	NR	NR
	Fd	Bosch		7655 - D786	MD786	R4011754	NR	NR	NR
	Fd	Bosch		7655 - D786	MD786	R4011754	NR	NR	NR
	Fd	Bosch		7655 - D786	MD786	R4011754	NR	NR	NR
	Fd	Bosch		7654 - D786	MD786A	R4011754	NR	NR	NR
	Fd	Bosch		7654 - D786	MD786A	R4011754	NR	NR	NR
	Fd	Bosch		7654 - D786	MD786A	R4011754	NR	NR	NR
	Fd	Bosch		7654 - D786	MD786A	R4011754	NR	NR	NR
	Rd	Bosch		7655 - D786	MD786	R4011754	NR	NR	NR
	Rd	Bosch		7654 - D786	MD786A	R4011754	NR	NR	NR
	Rd	Bosch		7655 - D786	MD786	R4011754	NR	NR	NR
	Rd	Bosch		7655 - D786	MD786	R4011754	NR	NR	NR
	Rd	Bosch		7655 - D786	MD786	R4011754	NR	NR	NR
	Rd	Bosch		7654 - D786	MD786A	R4011754	NR	NR	NR
	Rd	Bosch		7654 - D786	MD786A	R4011754	NR	NR	NR
	Rd	Bosch		7654 - D786	MD786A	R4011754	NR	NR	NR
2004									
	Fd	Bosch		7655 - D786	MD786	R4011754	NR	NR	NR
	Fd	Bosch		7655 - D786	MD786	R4011754	NR	NR	NR
	Fd	Bosch		7655 - D786	MD786	R4011754	NR	NR	NR
	Fd	Bosch		7655 - D786	MD786	R4011754	NR	NR	NR
	Fd	Bosch		7654 - D786	MD786A	R4011754	NR	NR	NR
	Fd	Bosch		7654 - D786	MD786A	R4011754	NR	NR	NR
	Fd	Bosch		7654 - D786	MD786A	R4011754	NR	NR	NR
	Fd	Bosch		7654 - D786	MD786A	R4011754	NR	NR	NR

72 - Phenolic/Steel Face

356 - Single Hydraulic System, Bosch Cylinder, after Serial No. Q20000, 18,500lb. Rear Axle

365 - Caliper Loaded with Hardware and Disc Pads

387 - 10 Hole Rotor

388 - 5 Hole Rotor

391 - 6 Hole Rotor

MERITOR DRUM OR ROTOR NO.	CALIPER OR CYLINDER BORE SIZE	MERITOR CALIPER OR WHEEL CYLINDER (LEFT)	MERITOR CALIPER OR WHEEL CYLINDER (RIGHT)	MERITOR CALIPER OR WHEEL CYLINDER REPAIR KIT	MERITOR CALIPER PISTON	MERITOR MASTER CYLINDER	MERITOR MASTER CYLINDER KIT	MERITOR BRAKE HOSE (LEFT)	MERITOR BRAKE HOSE (RIGHT)
FREIGHTLINER(Cont.)									
MB70									
N/A	2-19/32 "	R42R55314	R42R55314	R40107771	R4090100P[72]	-	-	-	-
N/A	2-19/32 "	R42R55314	R42R55314	R40107771	R4090100P[72]	-	-	-	-
N/A	2-7/8 "	R4255656	R4255656	R4066365	R4090096[72]	-	-	-	-
N/A	2-7/8 "	R4255656	R4255656	R4066365	R4090096[72]	-	-	-	-
N/A	2-7/8 "	R4255656	R4255656	R4066365	R4090096[72]	-	-	-	-
N/A	2-7/8 "	R4255656	R4255656	R4066365	R4090096[72]	-	-	-	-
N/A	2-19/32 "	R42R55314	R42R55314	R40107771	R4090100P[72]	-	-	-	-
N/A	2-19/32 "	R42R55314	R42R55314	R40107771	R4090100P[72]	-	-	-	-
N/A	2-7/8 "	R4255656	R4255656	R4066365	R4090096[72]	-	-	-	-
N/A	2-7/8 "	R4255656	R4255656	R4066365	R4090096[72]	-	-	-	-
N/A	2-19/32 "	R42R55314	R42R55314	R40107771	R4090100P[72]	-	-	-	-
N/A	2-19/32 "	R42R55314	R42R55314	R40107771	R4090100P[72]	-	-	-	-
N/A	2-7/8 "	R4255656	R4255656	R4066365	R4090096[72]	-	-	-	-
N/A	2-7/8 "	R4255656	R4255656	R4066365	R4090096[72]	-	-	-	-
N/A	2-7/8 "	R4255656	R4255656	R4066365	R4090096[72]	-	-	-	-
N/A	2-19/32 "	R42R55314	R42R55314	R40107771	R4090100P[72]	-	-	-	-
N/A	2-19/32 "	R42R55314	R42R55314	R40107771	R4090100P[72]	-	-	-	-
N/A	2-7/8 "	R4255656	R4255656	R4066365	R4090096[72]	-	-	-	-
N/A	2-7/8 "	R4255656	R4255656	R4066365	R4090096[72]	-	-	-	-
MT45									
23-123572-004[391]	73mm	R424153216	R424153216[365]	R4011758	R4011757[72]	-	-	-	-
R44141476[388]	73mm	R424153216	R424153216[365]	R4011758	R4011757[72]	-	-	-	-
23-123572-004[391]	66mm	R424153263	R424153263[356]	R4011752	R4011751[72]	-	-	-	-
23-123550-004[387]	66mm	R424153263	R424153263[356]	R4011752	R4011751[72]	-	-	-	-
23-123552-004[387]	73mm	R424153216	R424153216[365]	R4011758	R4011757[72]	-	-	-	-
23-123552-004[387]	66mm	R424153263	R424153263[356]	R4011752	R4011751[72]	-	-	-	-
R44141476[388]	66mm	R424153263	R424153263[356]	R4011752	R4011751[72]	-	-	-	-
23-123550-004[387]	73mm	R424153216	R424153216[365]	R4011758	R4011757[72]	-	-	-	-
23-123572-004[391]	66mm	R424153263	R424153263[356]	R4011752	R4011751[72]	-	-	-	-
R44141476[388]	73mm	R424153216	R424153216[365]	R4011758	R4011757[72]	-	-	-	-
23-123572-004[391]	73mm	R424153216	R424153216[365]	R4011758	R4011757[72]	-	-	-	-
R44141476[388]	66mm	R424153263	R424153263[356]	R4011752	R4011751[72]	-	-	-	-
23-123550-004[387]	73mm	R424153216	R424153216[365]	R4011758	R4011757[72]	-	-	-	-
23-123552-004[387]	66mm	R424153263	R424153263[356]	R4011752	R4011751[72]	-	-	-	-
23-123550-004[387]	66mm	R424153263	R424153263[356]	R4011752	R4011751[72]	-	-	-	-
23-123552-004[387]	73mm	R424153216	R424153216[365]	R4011758	R4011757[72]	-	-	-	-
23-123572-004[391]	73mm	R424153216	R424153216[365]	R4011758	R4011757[72]	-	-	-	-
R44141476[388]	73mm	R424153216	R424153216[365]	R4011758	R4011757[72]	-	-	-	-
23-123550-004[387]	73mm	R424153216	R424153216[365]	R4011758	R4011757[72]	-	-	-	-
23-123552-004[387]	73mm	R424153216	R424153216[365]	R4011758	R4011757[72]	-	-	-	-
23-123572-004[391]	66mm	R424153263	R424153263[356]	R4011752	R4011751[72]	-	-	-	-
23-123552-004[387]	66mm	R424153263	R424153263[356]	R4011752	R4011751[72]	-	-	-	-
R44141476[388]	66mm	R424153263	R424153263[356]	R4011752	R4011751[72]	-	-	-	-
23-123550-004[387]	66mm	R424153263	R424153263[356]	R4011752	R4011751[72]	-	-	-	-
23-123552-004[387]	73mm	R424153216	R424153216[365]	R4011758	R4011757[72]	-	-	-	-
23-123572-004[391]	66mm	R424153263	R424153263[356]	R4011752	R4011751[72]	-	-	-	-
23-123572-004[391]	73mm	R424153216	R424153216[365]	R4011758	R4011757[72]	-	-	-	-
R44141476[388]	73mm	R424153216	R424153216[365]	R4011758	R4011757[72]	-	-	-	-
23-123550-004[387]	73mm	R424153216	R424153216[365]	R4011758	R4011757[72]	-	-	-	-
23-123550-004[387]	66mm	R424153263	R424153263[356]	R4011752	R4011751[72]	-	-	-	-
R44141476[388]	66mm	R424153263	R424153263[356]	R4011752	R4011751[72]	-	-	-	-
23-123552-004[387]	66mm	R424153263	R424153263[356]	R4011752	R4011751[72]	-	-	-	-
23-123572-004[391]	73mm	R424153216	R424153216[365]	R4011758	R4011757[72]	-	-	-	-
23-123550-004[387]	73mm	R424153216	R424153216[365]	R4011758	R4011757[72]	-	-	-	-
R44141476[388]	73mm	R424153216	R424153216[365]	R4011758	R4011757[72]	-	-	-	-
23-123552-004[387]	73mm	R424153216	R424153216[365]	R4011758	R4011757[72]	-	-	-	-
23-123552-004[387]	66mm	R424153263	R424153263[356]	R4011752	R4011751[72]	-	-	-	-
23-123572-004[391]	66mm	R424153263	R424153263[356]	R4011752	R4011751[72]	-	-	-	-
23-123550-004[387]	66mm	R424153263	R424153263[356]	R4011752	R4011751[72]	-	-	-	-
R44141476[388]	66mm	R424153263	R424153263[356]	R4011752	R4011751[72]	-	-	-	-

MAKE MODEL YEAR AXLE CODE AXLE WEIGHT	AXLE & BRK. TYPE	BRK. MFG.	BRAKE SIZE	FMSI	MERITOR DISC PAD OR BRAKE SHOE	MERITOR GUIDE PIN OR RETURN SPRING KIT	MERITOR CALIPER HWD. KIT OR RETURN SPRING KIT	MERITOR ADJUSTER KIT (LEFT WHEEL)	MERITOR ADJUSTER KIT (RIGHT WHEEL)
FREIGHTLINER(Cont.)									
MT45(Cont.)									
2004									
	Rd	Bosch		7654 - D786	MD786A	R4011754	NR	NR	NR
	Rd	Bosch		7654 - D786	MD786A	R4011754	NR	NR	NR
	Rd	Bosch		7655 - D786	MD786	R4011754	NR	NR	NR
	Rd	Bosch		7655 - D786	MD786	R4011754	NR	NR	NR
	Rd	Bosch		7655 - D786	MD786	R4011754	NR	NR	NR
	Rd	Bosch		7655 - D786	MD786	R4011754	NR	NR	NR
	Rd	Bosch		7654 - D786	MD786A	R4011754	NR	NR	NR
	Rd	Bosch		7654 - D786	MD786A	R4011754	NR	NR	NR
GMC									
C-2500 SERIES- 3/4 TON - CONVENTIONAL CAB, PICKUP AND SUBURBAN									
1999									
4x2	Ra	GM	11.1563 x 2-3/4 "	2073TT - 473	R46473	R40H369	R40H4072DP[278]	R40H2586	R40H2587
	Ra	GM	13 " x 2-1/2 "	2042AT - 451	R46451	R40H378	R40H7055	R40H2588	R40H2589
	Ra	GM	13 " x 2-1/2 "	2042AT - 451	R46451	R40H378	R40H7055	R40H2588	R40H2589
	Ra	GM	13 " x 2-1/2 "	2042AT - 451	R46451	R40H378	R40H7055	R40H2588	R40H2589
4x2									
7,200 lb. GVW	Fd	GM		7259 - D369	MD369	R40H5083	R40H5707	NR	NR
	Fd	GM		7259 - D369	MD369	R40H5083	R40H5707	NR	NR
4x2									
8,600 lb. GVW	Fd	GM		7260 - D370	MD370	R40H5083	R40H5707	NR	NR
	Fd	GM		7260 - D370	MD370	R40H5083	R40H5707	NR	NR
1998									
	Ra	GM	11.1563 x 2-3/4 "	2073TT - 473	R46473	R40H369	R40H4072DP[278]	R40H2586	R40H2587
	Ra	GM	13 " x 2-1/2 "	2042AT - 451	R46451	R40H378	R40H7055	R40H2588	R40H2589
	Ra	GM	13 " x 2-1/2 "	2042AT - 451	R46451	R40H378	R40H7055	R40H2588	R40H2589
	Ra	GM	13 " x 2-1/2 "	2042AT - 451	R46451	R40H378	R40H7055	R40H2588	R40H2589
7,200 lb. GVW	Fd	GM		7259 - D369	MD369	R40H5083	R40H5707	NR	NR
	Fd	GM		7259 - D369	MD369	R40H5083	R40H5707	NR	NR
8,600 lb. GVW	Fd	GM		7260 - D370	MD370	R40H5083	R40H5707	NR	NR
	Fd	GM		7260 - D370	MD370	R40H5083	R40H5707	NR	NR
1997									
	Ra	GM	11.1563 x 2-3/4 "	2073TT - 473	R46473	R40H369	R40H4072DP[278]	R40H2586	R40H2587
	Ra	GM	13 " x 2-1/2 "	2042AT - 451	R46451	R40H378	R40H7055	R40H2588	R40H2589
	Ra	GM	13 " x 2-1/2 "	2042AT - 451	R46451	R40H378	R40H7055	R40H2588	R40H2589
	Ra	GM	13 " x 2-1/2 "	2042AT - 451	R46451	R40H378	R40H7055	R40H2588	R40H2589
7,200 lb. GVW	Fd	GM		7259 - D369	MD369	R40H5083	R40H5707	NR	NR
	Fd	GM		7259 - D369	MD369	R40H5083	R40H5707	NR	NR
8,600 lb. GVW	Fd	GM		7260 - D370	MD370	R40H5083	R40H5707	NR	NR
	Fd	GM		7260 - D370	MD370	R40H5083	R40H5707	NR	NR
1996									
	Ra	GM	11.1563 x 2-3/4 "	2073TT - 473	R46473	R40H369	R40H4072DP[278]	R40H2586	R40H2587
	Ra	GM	13 " x 2-1/2 "	2042AT - 451	R46451	R40H378	R40H7055	R40H2588	R40H2589
	Ra	GM	13 " x 2-1/2 "	2042AT - 451	R46451	R40H378	R40H7055	R40H2588	R40H2589
	Ra	GM	13 " x 2-1/2 "	2042AT - 451	R46451	R40H378	R40H7055	R40H2588	R40H2589
7,200 lb. GVW	Fd	GM		7259 - D369	MD369	R40H5083	R40H5707	NR	NR
	Fd	GM		7259 - D369	MD369	R40H5083	R40H5707	NR	NR
8,600 lb. GVW	Fd	GM		7260 - D370	MD370	R40H5083	R40H5707	NR	NR
	Fd	GM		7260 - D370	MD370	R40H5083	R40H5707	NR	NR
1995									
	Ra	GM	11.1563 x 2-3/4 "	2073TT - 473	R46473	R40H369	R40H4072DP[278]	R40H2586	R40H2587
	Ra	GM	13 " x 2-1/2 "	2042AT - 451	R46451	R40H378	R40H7055	R40H2588	R40H2589
	Ra	GM	13 " x 2-1/2 "	2042AT - 451	R46451	R40H378	R40H7055	R40H2588	R40H2589
7,200 lb. GVW	Fd	GM		7259 - D369	MD369	R40H5083	R40H5707	NR	NR
	Fd	GM		7259 - D369	MD369	R40H5083	R40H5707	NR	NR
8,600 lb. GVW	Fd	GM		7260 - D370	MD370	R40H5083	R40H5707	NR	NR
	Fd	GM		7260 - D370	MD370	R40H5083	R40H5707	NR	NR
1994									
	Ra	GM	11.1563 x 2-3/4 "	2073TT - 473	R46473	R40H369	R40H4072DP[278]	R40H2586	R40H2587
	Ra	GM	13 " x 2-1/2 "	2042AT - 451	R46451	R40H378	R40H7055	R40H2588	R40H2589
	Ra	GM	13 " x 2-1/2 "	2042AT - 451	R46451	R40H378	R40H7055	R40H2588	R40H2589
	Ra	GM	13 " x 2-1/2 "	2042AT - 451	R46451	R40H378	R40H7055	R40H2588	R40H2589
7,200 lb. GVW	Fd	GM		7259 - D369	MD369	R40H5083	R40H5707	NR	NR

72 - Phenolic/Steel Face

278 - For Heavy Duty version use E-11287

282 - 10 1/2" Ring Gear, First Design; Use 3 3/8" Outside Diameter Axle Tubes

291 - Except 9 1/2" Ring Gear

293 - With 9 1/2" Ring Gear and 6 3/8" Drum Width

332 - Power Brakes, Hydraulic Booster

334 - Power Brakes, Vacuum Booster

356 - Single Hydraulic System, Bosch Cylinder, after Serial No. Q20000, 18,500lb. Rear Axle

365 - Caliper Loaded with Hardware and Disc Pads

MERITOR DRUM OR ROTOR NO.	CALIPER OR CYLINDER BORE SIZE	MERITOR CALIPER OR WHEEL CYLINDER (LEFT)	MERITOR CALIPER OR WHEEL CYLINDER (RIGHT)	MERITOR CALIPER OR WHEEL CYLINDER REPAIR KIT	MERITOR CALIPER PISTON	MERITOR MASTER CYLINDER	MERITOR MASTER CYLINDER KIT	MERITOR BRAKE HOSE (LEFT)	MERITOR BRAKE HOSE (RIGHT)
FREIGHTLINER(Cont.)									
MT45(Cont.)									
23-123572-004[391]	66mm	R424153263	R424153263[356]	R4011752	R4011751[72]	-	-	-	-
23-123552-004[387]	66mm	R424153263	R424153263[356]	R4011752	R4011751[72]	-	-	-	-
23-123572-004[391]	73mm	R424153216	R424153216[365]	R4011758	R4011757[72]	-	-	-	-
23-123550-004[387]	73mm	R424153216	R424153216[365]	R4011758	R4011757[72]	-	-	-	-
R44141476[388]	73mm	R424153216	R424153216[365]	R4011758	R4011757[72]	-	-	-	-
23-123552-004[387]	73mm	R424153216	R424153216[365]	R4011758	R4011757[72]	-	-	-	-
23-123550-004[387]	66mm	R424153263	R424153263[356]	R4011752	R4011751[72]	-	-	-	-
R44141476[388]	66mm	R424153263	R424153263[356]	R4011752	R4011751[72]	-	-	-	-
GMC									
C-2500 SERIES- 3/4 TON - CONVENTIONAL CAB, PICKUP AND SUBURBAN									
R44140543[291]	1 "	R4134037	R4134037	R4166620	NR	-	-	-	-
R44140449[293]	1-1/16 "	R4133709	R4133709	N/A	NR	-	-	-	-
R44140682	1-1/16 "	R4133709	R4133709	N/A	NR	-	-	-	-
R44140363[282]	1-1/16 "	R4133709	R4133709	N/A	NR	-	-	-	-
R44145107	2-15/16 "	R42R55501	R42R55500	R4066306	R4090087S	R4110372[334]	R4122202	-	-
R44145107	2-15/16 "	R42R55501	R42R55500	R4066306	R4090087S	R4113056[332]	N/A	-	-
R44141818[390]	3-5/32 "	R42R55497	R42R55496	R4066330	R4090101S	R4113056[332]	N/A	-	-
R44141818[390]	3-5/32 "	R42R55497	R42R55496	R4066330	R4090101S	R4110372[334]	R4122202	-	-
R44140543[291]	1 "	R4134037	R4134037	R4166620	NR	-	-	-	-
R44140449[293]	1-1/16 "	R4133709	R4133709	N/A	NR	-	-	-	-
R44140682	1-1/16 "	R4133709	R4133709	N/A	NR	-	-	-	-
R44140363[282]	1-1/16 "	R4133709	R4133709	N/A	NR	-	-	-	-
R44145107	2-15/16 "	R42R55501	R42R55500	R4066306	R4090087S	R4113056[332]	N/A	-	-
R44145107	2-15/16 "	R42R55501	R42R55500	R4066306	R4090087S	R4110372[334]	R4122202	-	-
R44141818[390]	3-5/32 "	R42R55497	R42R55496	R4066330	R4090101S	R4113056[332]	N/A	-	-
R44141818[390]	3-5/32 "	R42R55497	R42R55496	R4066330	R4090101S	R4110372[334]	R4122202	-	-
R44140543[291]	1 "	R4134037	R4134037	R4166620	NR	-	-	-	-
R44140449[293]	1-1/16 "	R4133709	R4133709	N/A	NR	-	-	-	-
R44140682	1-1/16 "	R4133709	R4133709	N/A	NR	-	-	-	-
R44140363[282]	1-1/16 "	R4133709	R4133709	N/A	NR	-	-	-	-
R44145107	2-15/16 "	R42R55501	R42R55500	R4066306	R4090087S	R4110372[334]	R4122202	-	-
R44145107	2-15/16 "	R42R55501	R42R55500	R4066306	R4090087S	R4113056[332]	N/A	-	-
R44141818[390]	3-5/32 "	R42R55497	R42R55496	R4066330	R4090101S	R4113056[332]	N/A	-	-
R44141818[390]	3-5/32 "	R42R55497	R42R55496	R4066330	R4090101S	R4110372[334]	R4122202	-	-
R44140543[291]	1 "	R4134037	R4134037	R4166620	NR	-	-	-	-
R44140363[282]	1-1/16 "	R4133709	R4133709	N/A	NR	-	-	-	-
R44140682	1-1/16 "	R4133709	R4133709	N/A	NR	-	-	-	-
R44140449[293]	1-1/16 "	R4133709	R4133709	N/A	NR	-	-	-	-
R44145107	2-15/16 "	R42R55501	R42R55500	R4066306	R4090087S	R4113056[332]	N/A	-	-
R44145107	2-15/16 "	R42R55501	R42R55500	R4066306	R4090087S	R4110372[334]	R4122202	-	-
R44141818[390]	3-5/32 "	R42R55497	R42R55496	R4066330	R4090101S	R4113056[332]	N/A	-	-
R44141818[390]	3-5/32 "	R42R55497	R42R55496	R4066330	R4090101S	R4110372[334]	R4122202	-	-
R44140543[291]	1 "	R4134037	R4134037	R4166620	NR	-	-	-	-
R44140363[282]	1-1/16 "	R4133709	R4133709	N/A	NR	-	-	-	-
R44140449[293]	1-1/16 "	R4133709	R4133709	N/A	NR	-	-	-	-
R44145107	2-15/16 "	R42R55501	R42R55500	R4066306	R4090087S	R4110372[334]	R4122202	-	-
R44145107	2-15/16 "	R42R55501	R42R55500	R4066306	R4090087S	R4113056[332]	N/A	-	-
R44141818[390]	3-5/32 "	R42R55497	R42R55496	R4066330	R4090101S	R4113056[332]	N/A	-	-
R44141818[390]	3-5/32 "	R42R55497	R42R55496	R4066330	R4090101S	R4110372[334]	R4122202	-	-
R44140543[291]	1 "	R4134037	R4134037	R4166620	NR	-	-	-	-
R44140449[293]	1-1/16 "	R4133709	R4133709	N/A	NR	-	-	-	-
R44140682	1-1/16 "	R4133709	R4133709	N/A	NR	-	-	-	-
R44140363[282]	1-1/16 "	R4133709	R4133709	N/A	NR	-	-	-	-
R44145107	2-15/16 "	R42R55501	R42R55500	R4066306	R4090087S	R4110372[334]	R4122202	-	-

387 - 10 Hole Rotor

388 - 5 Hole Rotor

390 - Rotor and Hub One Piece Assembly With ABS Ring

391 - 6 Hole Rotor

MAKE MODEL YEAR AXLE CODE AXLE WEIGHT	AXLE & BRK. TYPE	BRK. MFG.	BRAKE SIZE	FMSI	MERITOR DISC PAD OR BRAKE SHOE	MERITOR GUIDE PIN OR RETURN SPRING KIT	MERITOR CALIPER HWD. KIT OR RETURN SPRING KIT	MERITOR ADJUSTER KIT (LEFT WHEEL)	MERITOR ADJUSTER KIT (RIGHT WHEEL)
GMC(Cont.)									
C-2500 SERIES- 3/4 TON - CONVENTIONAL CAB, PICKUP AND SUBURBAN(Cont.)									
1994									
	Fd	GM		7259 - D369	MD369	R40H5083	R40H5707	NR	NR
8,600 lb. GVW	Fd	GM		7260 - D370	MD370	R40H5083	R40H5707	NR	NR
	Fd	GM		7260 - D370	MD370	R40H5083	R40H5707	NR	NR
1993									
	Ra	GM	11.1563 x 2-3/4 "	2073TT - 473	R46473	R40H369	R40H4072DP[278]	R40H2586	R40H2587
	Ra	GM	13 " x 2-1/2 "	2042AT - 451	R46451	R40H378	R40H7055	R40H2588	R40H2589
	Ra	GM	13 " x 2-1/2 "	2042AT - 451	R46451	R40H378	R40H7055	R40H2588	R40H2589
7,200 lb. GVW	Fd	GM		7259 - D369	MD369	R40H5083	R40H5707	NR	NR
	Fd	GM		7259 - D369	MD369	R40H5083	R40H5707	NR	NR
8,600 lb. GVW	Fd	GM		7260 - D370	MD370	R40H5083	R40H5707	NR	NR
	Fd	GM		7260 - D370	MD370	R40H5083	R40H5707	NR	NR
1992									
	Ra	GM	11.1563 x 2-3/4 "	2073TT - 473	R46473	R40H369	R40H4072DP[278]	R40H2586	R40H2587
	Ra	GM	13 " x 2-1/2 "	2042AT - 451	R46451	R40H378	R40H7055	R40H2588	R40H2589
	Ra	GM	13 " x 2-1/2 "	2042AT - 451	R46451	R40H378	R40H7055	R40H2588	R40H2589
7,200 lb. GVW	Fd	GM		7259 - D369	MD369	R40H5083	R40H5707	NR	NR
	Fd	GM		7259 - D369	MD369	R40H5083	R40H5707	NR	NR
8,600 lb. GVW	Fd	GM		7260 - D370	MD370	R40H5083	R40H5707	NR	NR
	Fd	GM		7260 - D370	MD370	R40H5083	R40H5707	NR	NR
1991									
	Ra	GM	11.1563 x 2-3/4 "	2073TT - 473	R46473	R40H369	R40H4072DP[278]	R40H2586	R40H2587
	Ra	GM	13 " x 2-1/2 "	2042AT - 451	R46451	R40H378	R40H7055	R40H2588	R40H2589
	Ra	GM	13 " x 2-1/2 "	2042AT - 451	R46451	R40H378	R40H7055	R40H2588	R40H2589
7,200 lb. GVW	Fd	GM		7259 - D369	MD369	R40H5083	R40H5707	NR	NR
	Fd	GM		7259 - D369	MD369	R40H5083	R40H5707	NR	NR
8,600 lb. GVW	Fd	GM		7260 - D370	MD370	R40H5083	R40H5707	NR	NR
	Fd	GM		7260 - D370	MD370	R40H5083	R40H5707	NR	NR
1990									
	Ra	GM	11.1563 x 2-3/4 "	2073TT - 473	R46473	R40H369	R40H4072DP[278]	R40H2586	R40H2587
	Ra	GM	13 " x 2-1/2 "	2042AT - 451	R46451	R40H378	R40H7055	R40H2588	R40H2589
	Ra	GM	13 " x 2-1/2 "	2042AT - 451	R46451	R40H378	R40H7055	R40H2588	R40H2589
7,200 lb. GVW	Fd	GM		7259 - D369	MD369	R40H5083	R40H5707	NR	NR
	Fd	GM		7259 - D369	MD369	R40H5083	R40H5707	NR	NR
8,600 lb. GVW	Fd	GM		7260 - D370	MD370	R40H5083	R40H5707	NR	NR
	Fd	GM		7260 - D370	MD370	R40H5083	R40H5707	NR	NR
1989									
	Ra	GM	11.1563 x 2-3/4 "	2073TT - 473	R46473	R40H369	R40H4072DP[278]	R40H2586	R40H2587
	Ra	GM	13 " x 2-1/2 "	2042AT - 451	R46451	R40H378	R40H7055	R40H2588	R40H2589
	Ra	GM	13 " x 2-1/2 "	2042AT - 451	R46451	R40H378	R40H7055	R40H2588	R40H2589
7,200 lb. GVW	Fd	GM		7259 - D369	MD369	R40H5083	R40H5707	NR	NR
	Fd	GM		7259 - D369	MD369	R40H5083	R40H5707	NR	NR
8,600 lb. GVW	Fd	GM		7260 - D370	MD370	R40H5083	R40H5707	NR	NR
	Fd	GM		7260 - D370	MD370	R40H5083	R40H5707	NR	NR
1988									
	Ra	GM	11.1563 x 2-3/4 "	2073TT - 473	R46473	R40H369	R40H4072DP[278]	R40H2586	R40H2587
	Ra	GM	13 " x 2-1/2 "	2042AT - 451	R46451	R40H378	R40H7055	R40H2588	R40H2589
	Ra	GM	13 " x 2-1/2 "	2042AT - 451	R46451	R40H378	R40H7055	R40H2588	R40H2589
7,200 lb. GVW	Fd	GM		7259 - D369	MD369	R40H5083	R40H5707	NR	NR
	Fd	GM		7259 - D369	MD369	R40H5083	R40H5707	NR	NR
8,600 lb. GVW	Fd	GM		7260 - D370	MD370	R40H5083	R40H5707	NR	NR
	Fd	GM		7260 - D370	MD370	R40H5083	R40H5707	NR	NR
1986									
	Fd	GM		728A - D52	MD52	R40H5004DP	R40H5500	NR	NR
	Fd	GM		728A - D52	MD52	R40H5004DP	R40H5500	NR	NR
	Fd	GM		728A - D52	MD52	R40H5004DP	R40H5500	NR	NR
	Fd	GM		7084A - D153	MD392	R40H5004DP	R40H5500	NR	NR
	Fd	GM		728A - D52	MD52	R40H5004DP	R40H5500	NR	NR
	Fd	GM		7084A - D153	MD392	R40H5004DP	R40H5500	NR	NR
	Ra	GM	11.1563 x 2-3/4 "	2073TT - 473	R46473	R40H369	R40H4072DP[278]	R40H2586	R40H2587
	Ra	GM	11.1563 x 2-3/4 "	2073TT - 473	R46473	R40H369	R40H4072DP[278]	R40H2586	R40H2587
	Ra	GM	13 " x 2-1/2 "	2042AT - 451	R46451	R40H378	R40H7055	R40H2588	R40H2589
	Ra	GM	13 " x 2-1/2 "	2042AT - 451	R46451	R40H378	R40H7055	R40H2588	R40H2589
	Ra	GM	13 " x 2-1/2 "	2042AT - 451	R46451	R40H378	R40H7055	R40H2588	R40H2589

53 - Power Brakes

278 - For Heavy Duty version use E-11287

282 - 10 1/2" Ring Gear, First Design; Use 3 3/8" Outside Diameter Axle Tubes

291 - Except 9 1/2" Ring Gear

293 - With 9 1/2" Ring Gear and 6 3/8" Drum Width

303 - Power Brakes, Except Export

309 - Power Brakes, Hydroboost

332 - Power Brakes, Hydraulic Booster

334 - Power Brakes, Vacuum Booster

MERITOR DRUM OR ROTOR NO.	CALIPER OR CYLINDER BORE SIZE	MERITOR CALIPER OR WHEEL CYLINDER (LEFT)	MERITOR CALIPER OR WHEEL CYLINDER (RIGHT)	MERITOR CALIPER OR WHEEL CYLINDER REPAIR KIT	MERITOR CALIPER PISTON	MERITOR MASTER CYLINDER	MERITOR MASTER CYLINDER KIT	MERITOR BRAKE HOSE (LEFT)	MERITOR BRAKE HOSE (RIGHT)
									GMC(Cont.)
C-2500 SERIES- 3/4 TON - CONVENTIONAL CAB, PICKUP AND SUBURBAN(Cont.)									
R44145107	2-15/16 "	R42R55501	R42R55500	R4066306	R4090087S	R4113056[332]	N/A	-	-
R44141818[390]	3-5/32 "	R42R55497	R42R55496	R4066330	R4090101S	R4110372[334]	R4122202	-	-
R44141818[390]	3-5/32 "	R42R55497	R42R55496	R4066330	R4090101S	R4113056[332]	N/A	-	-
R44140543[291]	1 "	R4134037	R4134037	R4166620	NR	-	-	-	-
R44140449[293]	1-1/16 "	R4133709	R4133709	N/A	NR	-	-	-	-
R44140363[282]	1-1/16 "	R4133709	R4133709	N/A	NR	-	-	-	-
R44145107	2-15/16 "	R42R55501	R42R55500	R4066306	R4090087S	R4113056[332]	N/A	-	-
R44145107	2-15/16 "	R42R55501	R42R55500	R4066306	R4090087S	R4110372[334]	R4122202	-	-
R44141818[390]	3-5/32 "	R42R55497	R42R55496	R4066330	R4090101S	R4113056[332]	N/A	-	-
R44141818[390]	3-5/32 "	R42R55497	R42R55496	R4066330	R4090101S	R4110372[334]	R4122202	-	-
R44140543[291]	1 "	R4134037	R4134037	R4166620	NR	-	-	-	-
R44140363[282]	1-1/16 "	R4133709	R4133709	N/A	NR	-	-	-	-
R44140449[293]	1-1/16 "	R4133709	R4133709	N/A	NR	-	-	-	-
R44145107	2-15/16 "	R42R55501	R42R55500	R4066306	R4090087S	R4113056[332]	N/A	-	-
R44145107	2-15/16 "	R42R55501	R42R55500	R4066306	R4090087S	R4110372[334]	R4122202	-	-
R44141818[390]	3-5/32 "	R42R55497	R42R55496	R4066330	R4090101S	R4110372[334]	R4122202	-	-
R44141818[390]	3-5/32 "	R42R55497	R42R55496	R4066330	R4090101S	R4113056[332]	N/A	-	-
R44140543[291]	1 "	R4134037	R4134037	R4166620	NR	-	-	-	-
R44140449[293]	1-1/16 "	R4133709	R4133709	N/A	NR	-	-	-	-
R44140363[282]	1-1/16 "	R4133709	R4133709	N/A	NR	-	-	-	-
R44145107	2-15/16 "	R42R55501	R42R55500	R4066306	R4090087S	R4112219[334]	N/A	-	-
R44145107	2-15/16 "	R42R55501	R42R55500	R4066306	R4090087S	R4112219[334]	N/A	-	-
R44141818[390]	3-5/32 "	R42R55497	R42R55496	R4066330	R4090101S	R4112220[309]	R4122141	-	-
R44141818[390]	3-5/32 "	R42R55497	R42R55496	R4066330	R4090101S	R4112220[309]	R4122141	-	-
R44140543[291]	1 "	R4134037	R4134037	R4166620	NR	-	-	-	-
R44140449[293]	1-1/16 "	R4133709	R4133709	N/A	NR	-	-	-	-
R44140363[282]	1-1/16 "	R4133709	R4133709	N/A	NR	-	-	-	-
R44145107	2-15/16 "	R42R55501	R42R55500	R4066306	R4090087S	R4112219[334]	N/A	-	-
R44145107	2-15/16 "	R42R55501	R42R55500	R4066306	R4090087S	R4112219[334]	N/A	-	-
R44141818[390]	3-5/32 "	R42R55497	R42R55496	R4066330	R4090101S	R4112220[309]	R4122141	-	-
R44141818[390]	3-5/32 "	R42R55497	R42R55496	R4066330	R4090101S	R4112220[309]	R4122141	-	-
R44140543[291]	1 "	R4134037	R4134037	R4166620	NR	-	-	-	-
R44140449[293]	1-1/16 "	R4133709	R4133709	N/A	NR	-	-	-	-
R44140363[282]	1-1/16 "	R4133709	R4133709	N/A	NR	-	-	-	-
R44145107	2-15/16 "	R42R55501	R42R55500	R4066306	R4090087S	R4112219[334]	N/A	-	-
R44145107	2-15/16 "	R42R55501	R42R55500	R4066306	R4090087S	R4112219[334]	N/A	-	-
R44141818[390]	3-5/32 "	R42R55497	R42R55496	R4066330	R4090101S	R4112220[309]	R4122141	-	-
R44141818[390]	3-5/32 "	R42R55497	R42R55496	R4066330	R4090101S	R4112220[309]	R4122141	-	-
R44141186[381]	2-15/16 "	R42R55208	R42R55207	R4066848	R4090013S	R4112058[303]	N/A	-	-
R44141186[381]	2-15/16 "	R42R55208	R42R55207	R4066848	R4090013S	R4111863[303]	N/A	R4577417	R4577418
R44141186[381]	2-15/16 "	R42R55061	R42R55060	R4066848	R4090013S	R4111863[303]	N/A	R4577417	R4577418
R44141186[381]	3-5/32 "	R42R55382	R42R55381	R4066557	R4090068S	R4111989[53]	N/A	-	-
R44141186[381]	2-15/16 "	R42R55061	R42R55060	R4066848	R4090013S	R4112058[303]	N/A	-	-
R44141186[381]	3-5/32 "	R42R55382	R42R55381	R4066557	R4090068S	R4111989[53]	N/A	-	-
R44140450	1 "	R4133608	R4133608	R4166620	NR	-	-	-	-
R44140450	1 "	R4133608	R4133608	R4166620	NR	-	-	-	-
R44140449[293]	1-1/16 "	R4133709	R4133709	N/A	NR	-	-	-	-
R44140363[282]	1-1/16 "	R4133709	R4133709	N/A	NR	-	-	-	-
R44140449[293]	1-1/16 "	R4133709	R4133709	N/A	NR	-	-	-	-

381 - Rotor and Hub One Piece Assembly W/O ABS Ring

390 - Rotor and Hub One Piece Assembly With ABS Ring

MAKE MODEL YEAR AXLE CODE AXLE WEIGHT	AXLE & BRK. TYPE	BRK. MFG.	BRAKE SIZE	FMSI	MERITOR DISC PAD OR BRAKE SHOE	MERITOR GUIDE PIN OR RETURN SPRING KIT	MERITOR CALIPER HWD. KIT OR RETURN SPRING KIT	MERITOR ADJUSTER KIT (LEFT WHEEL)	MERITOR ADJUSTER KIT (RIGHT WHEEL)
GMC(Cont.)									
C-2500 SERIES- 3/4 TON - CONVENTIONAL CAB, PICKUP AND SUBURBAN(Cont.)									
1986									
	Ra	GM	13 " x 2-1/2 "	2042AT - 451	R46451	R40H378	R40H7055	R40H2588	R40H2589
1985									
	Ra	GM	11.1563 x 2-3/4 "	2073TT - 473	R46473	R40H369	R40H4072DP[278]	R40H2586	R40H2587
	Ra	GM	11.1563 x 2-3/4 "	2073TT - 473	R46473	R40H369	R40H4072DP[278]	R40H2586	R40H2587
	Ra	GM	13 " x 2-1/2 "	2042AT - 451	R46451	R40H378	R40H7055	R40H2588	R40H2589
	Ra	GM	13 " x 2-1/2 "	2042AT - 451	R46451	R40H378	R40H7055	R40H2588	R40H2589
	Ra	GM	13 " x 2-1/2 "	2042AT - 451	R46451	R40H378	R40H7055	R40H2588	R40H2589
	Ra	GM	13 " x 2-1/2 "	2042AT - 451	R46451	R40H378	R40H7055	R40H2588	R40H2589
7,200 lb. GVW	Fd	GM		728A - D52	MD52	R40H5004DP	R40H5500	NR	NR
Suburban									
7,200 lb. GVW	Fd	GM		728A - D52	MD52	R40H5004DP	R40H5500	NR	NR
8,400 lb. GVW	Fd	GM		7084A - D153	MD392	R40H5004DP	R40H5500	NR	NR
	Fd	GM		7084A - D153	MD392	R40H5004DP	R40H5500	NR	NR
1984									
	Ra	GM	11.1563 x 2-3/4 "	2073TT - 473	R46473	R40H369	R40H4072DP[278]	R40H2586	R40H2587
	Ra	GM	11.1563 x 2-3/4 "	2073TT - 473	R46473	R40H369	R40H4072DP[278]	R40H2586	R40H2587
	Ra	GM	13 " x 2-1/2 "	2042AT - 451	R46451	R40H378	R40H7055	R40H2588	R40H2589
	Ra	GM	13 " x 2-1/2 "	2042AT - 451	R46451	R40H378	R40H7055	R40H2588	R40H2589
	Ra	GM	13 " x 2-1/2 "	2042AT - 451	R46451	R40H378	R40H7055	R40H2588	R40H2589
	Ra	GM	13 " x 2-1/2 "	2042AT - 451	R46451	R40H378	R40H7055	R40H2588	R40H2589
6,400 lb. GVW	Fd	GM		728A - D52	MD52	R40H5004DP	R40H5500	NR	NR
Suburban									
6,400, 7,200lb. GVW	Fd	GM		728A - D52	MD52	R40H5004DP	R40H5500	NR	NR
8,400 lb. GVW	Fd	GM		7084A - D153	MD392	R40H5004DP	R40H5500	NR	NR
	Fd	GM		7084A - D153	MD392	R40H5004DP	R40H5500	NR	NR
1983									
	Ra	GM	11.1563 x 2-3/4 "	2073TT - 473	R46473	R40H369	R40H4072DP[278]	R40H2586	R40H2587
	Ra	GM	11.1563 x 2-3/4 "	2073TT - 473	R46473	R40H369	R40H4072DP[278]	R40H2586	R40H2587
	Ra	GM	11.1563 x 2-3/4 "	2073TT - 473	R46473	R40H369	R40H4072DP[278]	R40H2586	R40H2587
	Ra	GM	11.1563 x 2-3/4 "	2073TT - 473	R46473	R40H369	R40H4072DP[278]	R40H2586	R40H2587
	Ra	GM	13 " x 2-1/2 "	2042AT - 451	R46451	R40H378	R40H7055	R40H2588	R40H2589
	Ra	GM	13 " x 2-1/2 "	2042AT - 451	R46451	R40H378	R40H7055	R40H2588	R40H2589
	Ra	GM	13 " x 2-1/2 "	2042AT - 451	R46451	R40H378	R40H7055	R40H2588	R40H2589
	Ra	GM	13 " x 2-1/2 "	2042AT - 451	R46451	R40H378	R40H7055	R40H2588	R40H2589
	Ra	GM	13 " x 2-1/2 "	2042AT - 451	R46451	R40H378	R40H7055	R40H2588	R40H2589
	Ra	GM	13 " x 2-1/2 "	2042AT - 451	R46451	R40H378	R40H7055	R40H2588	R40H2589
6,400 lb. GVW	Fd	GM		728A - D52	MD52	R40H5004DP	R40H5500	NR	NR
Suburban									
6,400, 7,200lb. GVW	Fd	GM		728A - D52	MD52	R40H5004DP	R40H5500	NR	NR
8,200, 8,600lb. GVW	Fd	GM		7084A - D153	MD392	R40H5004DP	R40H5500	NR	NR
	Fd	GM		7084A - D153	MD392	R40H5004DP	R40H5500	NR	NR
1982									
	Ra	GM	13 " x 2-1/2 "	2042AT - 451	R46451	R40H378	R40H7055	R40H2588	R40H2589
	Ra	GM	13 " x 2-1/2 "	2042AT - 451	R46451	R40H378	R40H7055	R40H2588	R40H2589
	Ra	GM	13 " x 2-1/2 "	2042AT - 451	R46451	R40H378	R40H7055	R40H2588	R40H2589
	Ra	GM	13 " x 2-1/2 "	2042AT - 451	R46451	R40H378	R40H7055	R40H2588	R40H2589
	Ra	GM	11.1563 x 2-3/4 "	2073TT - 473	R46473	R40H369	R40H4072DP[278]	R40H2586	R40H2587
Pickup	Ra	GM	11.1563 x 2-3/4 "	2073TT - 473	R46473	R40H369	R40H4072DP[278]	R40H2586	R40H2587
6,400 lb. GVW	Fd	GM		728A - D52	MD52	R40H5004DP	R40H5500	NR	NR
6,400, 7,200lb. GVW	Fd	GM		728A - D52	MD52	R40H5004DP	R40H5500	NR	NR
Heavy Duty Option									
8,600 lb. GVW	Fd	GM		7084A - D153	MD392	R40H5004DP	R40H5500	NR	NR
	Fd	GM		7084A - D153	MD392	R40H5004DP	R40H5500	NR	NR
1981									
	Ra	GM	11.1563 x 2-3/4 "	2073TT - 473	R46473	R40H369	R40H4072DP[278]	R40H2586	R40H2587
	Ra	GM	13 " x 2-1/2 "	2042AT - 451	R46451	R40H378	R40H7055	R40H2588	R40H2589
Pickup	Ra	GM	11.1563 x 2-3/4 "	2073TT - 473	R46473	R40H369	R40H4072DP[278]	R40H2586	R40H2587
	Ra	GM	13 " x 2-1/2 "	2042AT - 451	R46451	R40H378	R40H7055	R40H2588	R40H2589
6,400 lb. GVW	Fd	GM		728A - D52	MD52	R40H5004DP	R40H5500	NR	NR
Suburban									
6,400, 7,100lb. GVW	Fd	GM		728A - D52	MD52	R40H5004DP	R40H5500	NR	NR
7,500, 8,200lb. GVW	Fd	GM		7084A - D153	MD392	R40H5004DP	R40H5500	NR	NR
	Fd	GM		7084A - D153	MD392	R40H5004DP	R40H5500	NR	NR

278 - For Heavy Duty version use E-11287

282 - 10 1/2" Ring Gear, First Design; Use 3 3/8" Outside Diameter Axle Tubes

283 - 4 5/8" Drum Width

293 - With 9 1/2" Ring Gear and 6 3/8" Drum Width

294 - With 9 1/2" Ring Gear and 4 5/8" Drum Width

381 - Rotor and Hub One Piece Assembly W/O ABS Ring

MERITOR DRUM OR ROTOR NO.	CALIPER OR CYLINDER BORE SIZE	MERITOR CALIPER OR WHEEL CYLINDER (LEFT)	MERITOR CALIPER OR WHEEL CYLINDER (RIGHT)	MERITOR CALIPER OR WHEEL CYLINDER REPAIR KIT	MERITOR CALIPER PISTON	MERITOR MASTER CYLINDER	MERITOR MASTER CYLINDER KIT	MERITOR BRAKE HOSE (LEFT)	MERITOR BRAKE HOSE (RIGHT)
									GMC(Cont.)
C-2500 SERIES- 3/4 TON - CONVENTIONAL CAB, PICKUP AND SUBURBAN(Cont.)									
R44140363[282]	1-1/16 "	R4133709	R4133709	N/A	NR	-	-	-	-
R44140450	1 "	R4133608	R4133608	R4166620	NR	-	-	-	-
R44140450	1 "	R4133608	R4133608	R4166620	NR	-	-	-	-
R44140449[293]	1-1/16 "	R4133709	R4133709	N/A	NR	-	-	-	-
R44140449[293]	1-1/16 "	R4133709	R4133709	N/A	NR	-	-	-	-
R44140363[282]	1-1/16 "	R4133709	R4133709	N/A	NR	-	-	-	-
R44140363[282]	1-1/16 "	R4133709	R4133709	N/A	NR	-	-	-	-
R44141186[381]	2-15/16 "	R42R55208	R42R55207	R4066848	R4090013S	-	-	-	-
R44141186[381]	2-15/16 "	R42R55208	R42R55207	R4066848	R4090013S	-	-	-	-
R44141186[381]	3-5/32 "	R42R55382	R42R55381	R4066557	R4090068S	-	-	-	-
R44141186[381]	3-5/32 "	R42R55382	R42R55381	R4066557	R4090068S	-	-	-	-
R44140450	1 "	R4133608	R4133608	R4166620	NR	-	-	-	-
R44140450	1 "	R4133608	R4133608	R4166620	NR	-	-	-	-
R44140449[293]	1-1/16 "	R4133709	R4133709	N/A	NR	-	-	-	-
R44140363[282]	1-1/16 "	R4133709	R4133709	N/A	NR	-	-	-	-
R44140449[293]	1-1/16 "	R4133709	R4133709	N/A	NR	-	-	-	-
R44140363[282]	1-1/16 "	R4133709	R4133709	N/A	NR	-	-	-	-
R44141186[381]	2-15/16 "	R42R55208	R42R55207	R4066848	R4090013S	-	-	-	-
R44141186[381]	2-15/16 "	R42R55208	R42R55207	R4066848	R4090013S	-	-	-	-
R44141186[381]	3-5/32 "	R42R55382	R42R55381	R4066557	R4090068S	-	-	-	-
R44141186[381]	3-5/32 "	R42R55382	R42R55381	R4066557	R4090068S	-	-	-	-
R44140408[283]	1 "	R4133608	R4133608	R4166620	NR	-	-	-	-
R44140408[283]	1 "	R4133608	R4133608	R4166620	NR	-	-	-	-
R44140450	1 "	R4133608	R4133608	R4166620	NR	-	-	-	-
R44140450	1 "	R4133608	R4133608	R4166620	NR	-	-	-	-
R44140363[282]	1-1/16 "	R4133709	R4133709	N/A	NR	-	-	-	-
R44140363[282]	1-1/16 "	R4133709	R4133709	N/A	NR	-	-	-	-
R44140409[294]	1-1/16 "	R4133709	R4133709	N/A	NR	-	-	-	-
R44140449[293]	1-1/16 "	R4133709	R4133709	N/A	NR	-	-	-	-
R44140409[294]	1-1/16 "	R4133709	R4133709	N/A	NR	-	-	-	-
R44140449[293]	1-1/16 "	R4133709	R4133709	N/A	NR	-	-	-	-
R44141186[381]	2-15/16 "	R42R55208	R42R55207	R4066848	R4090013S	-	-	-	-
R44141186[381]	2-15/16 "	R42R55208	R42R55207	R4066848	R4090013S	-	-	-	-
R44141186[381]	3-5/32 "	R42R55382	R42R55381	R4066557	R4090068S	-	-	-	-
R44141186[381]	3-5/32 "	R42R55382	R42R55381	R4066557	R4090068S	-	-	-	-
R44140363[282]	1-1/16 "	R4133709	R4133709	N/A	NR	-	-	-	-
R44140409[294]	1-1/16 "	R4133709	R4133709	N/A	NR	-	-	-	-
R44140363[282]	1-1/16 "	R4133709	R4133709	N/A	NR	-	-	-	-
R44140409[294]	1-1/16 "	R4133709	R4133709	N/A	NR	-	-	-	-
R44140408[283]	1 "	R4133608	R4133608	R4166620	NR	-	-	-	-
R44140408[283]	1 "	R4133608	R4133608	R4166620	NR	-	-	-	-
R44141186[381]	2-15/16 "	R42R55208	R42R55207	R4066848	R4090013S	-	-	-	-
R44141186[381]	2-15/16 "	R42R55208	R42R55207	R4066848	R4090013S	-	-	-	-
R44141186[381]	3-5/32 "	R42R55382	R42R55381	R4066557	R4090068S	-	-	-	-
R44141186[381]	3-5/32 "	R42R55382	R42R55381	R4066557	R4090068S	-	-	-	-
R44140408[283]	1 "	R4133608	R4133608	R4166620	NR	-	-	-	-
R44140409[294]	1-1/16 "	R4133709	R4133709	N/A	NR	-	-	-	-
R44140408[283]	1 "	R4133608	R4133608	R4166620	NR	-	-	-	-
R44140409[294]	1-1/16 "	R4133709	R4133709	N/A	NR	-	-	-	-
R44141186[381]	2-15/16 "	R42R55208	R42R55207	R4066848	R4090013S	-	-	-	-
R44141186[381]	2-15/16 "	R42R55208	R42R55207	R4066848	R4090013S	-	-	-	-
R44141186[381]	3-5/32 "	R42R55382	R42R55381	R4066557	R4090068S	-	-	-	-
R44141186[381]	3-5/32 "	R42R55382	R42R55381	R4066557	R4090068S	-	-	-	-

MAKE MODEL YEAR AXLE CODE AXLE WEIGHT	AXLE & BRK. TYPE	BRK. MFG.	BRAKE SIZE	FMSI	MERITOR DISC PAD OR BRAKE SHOE	MERITOR GUIDE PIN OR RETURN SPRING KIT	MERITOR CALIPER HWD. KIT OR RETURN SPRING KIT	MERITOR ADJUSTER KIT (LEFT WHEEL)	MERITOR ADJUSTER KIT (RIGHT WHEEL)
GMC(Cont.)									
C-2500 SERIES- 3/4 TON - CONVENTIONAL CAB, PICKUP AND SUBURBAN(Cont.)									
1978									
	Fd	GM		728A - D52	MD52	R40H5004DP	R40H5500	NR	NR
	Fd	GM		728A - D52	MD52	R40H5004DP	R40H5500	NR	NR
	Ra	GM	11.1563 x 2-3/4 "	2073TT - 473	R46473	R40H369	R40H4072DP[278]	R40H2586	R40H2587
	Ra	GM	11.1563 x 2-3/4 "	2073TT - 473	R46473	R40H369	R40H4072DP[278]	R40H2586	R40H2587
	Ra	GM	13 " x 2-1/2 "	2042AT - 451	R46451	R40H378	R40H7055	R40H2588	R40H2589
	Ra	GM	13 " x 2-1/2 "	2042AT - 451	R46451	R40H378	R40H7055	R40H2588	R40H2589
1977									
	Fd	GM		728A - D52	MD52	R40H5004DP	R40H5500	NR	NR
	Fd	GM		728A - D52	MD52	R40H5004DP	R40H5500	NR	NR
	Ra	GM	11.1563 x 2-3/4 "	2073TT - 473	R46473	R40H369	R40H4072DP[278]	R40H2586	R40H2587
	Ra	GM	11.1563 x 2-3/4 "	2073TT - 473	R46473	R40H369	R40H4072DP[278]	R40H2586	R40H2587
	Ra	GM	13 " x 2-1/2 "	2042AT - 451	R46451	R40H378	R40H7055	R40H2588	R40H2589
	Ra	GM	13 " x 2-1/2 "	2042AT - 451	R46451	R40H378	R40H7055	R40H2588	R40H2589
1976									
	Fd	GM		728A - D52	MD52	R40H5004DP	R40H5500	NR	NR
	Fd	GM		728A - D52	MD52	R40H5004DP	R40H5500	NR	NR
	Ra	GM	11.1563 x 2-3/4 "	2073TT - 473	R46473	R40H369	R40H4072DP[278]	R40H2586	R40H2587
	Ra	GM	11.1563 x 2-3/4 "	2073TT - 473	R46473	R40H369	R40H4072DP[278]	R40H2586	R40H2587
	Ra	GM	13 " x 2-1/2 "	2042AT - 451	R46451	R40H378	R40H7055	R40H2588	R40H2589
	Ra	GM	13 " x 2-1/2 "	2042AT - 451	R46451	R40H378	R40H7055	R40H2588	R40H2589
GMC / CHEV									
2500 SIERRA , SILVERADO									
2007									
4x2	Rd	GM		7653 - D785	MVD785	NR	R40H5930	NR	NR
	Rd	GM		7653 - D785	MVD785	NR	R40H5930	NR	NR
4x2 EXC. w/ 8600 GVWR Crew Cab	Fd	GM		7652 - D784	MVD784	NR	R40H5931	NR	NR
4x2 w/ 8600 GVWR Crew Cab	Fd	GM		7652 - D784	MVD784	NR	R40H5931	NR	NR
4x4	Rd	GM		7653 - D785	MVD785	NR	R40H5930	NR	NR
	Rd	GM		7653 - D785	MVD785	NR	R40H5930	NR	NR
4x4 EXC. w/ 8600 GVWR Crew Cab	Fd	GM		7652 - D784	MVD784	NR	R40H5931	NR	NR
4x4 w/ 8600 GVWR Crew Cab	Fd	GM		7652 - D784	MVD784	NR	R40H5931	NR	NR
2006									
4x2	Rd	GM		7653 - D785	MVD785	NR	R40H5930	NR	NR
	Rd	GM		7653 - D785	MVD785	NR	R40H5930	NR	NR
4x2 EXC. w/ 8600 GVWR Crew Cab	Fd	GM		7652 - D784	MVD784	NR	R40H5931	NR	NR
4x2 w/ 8600 GVWR Crew Cab	Fd	GM		7652 - D784	MVD784	NR	R40H5931	NR	NR
4x4	Rd	GM		7653 - D785	MVD785	NR	R40H5930	NR	NR
	Rd	GM		7653 - D785	MVD785	NR	R40H5930	NR	NR
4x4 EXC. w/ 8600 GVWR Crew Cab	Fd	GM		7652 - D784	MVD784	NR	R40H5931	NR	NR
4x4 w/ 8600 GVWR Crew Cab	Fd	GM		7652 - D784	MVD784	NR	R40H5931	NR	NR
2005									
4x2	Rd	GM		7653 - D785	MVD785	NR	R40H5930	NR	NR
	Rd	GM		7653 - D785	MVD785	NR	R40H5930	NR	NR
4x2 EXC. w/ 8600 GVWR Crew Cab	Fd	GM		7652 - D784	MVD784	NR	R40H5931	NR	NR
4x2 w/ 8600 GVWR Crew Cab	Fd	GM		7652 - D784	MVD784	NR	R40H5931	NR	NR
4x4	Rd	GM		7653 - D785	MVD785	NR	R40H5930	NR	NR
	Rd	GM		7653 - D785	MVD785	NR	R40H5930	NR	NR
4x4 EXC. w/ 8600 GVWR Crew Cab	Fd	GM		7652 - D784	MVD784	NR	R40H5931	NR	NR
4x4 w/ 8600 GVWR Crew Cab	Fd	GM		7652 - D784	MVD784	NR	R40H5931	NR	NR
2004									
4x2	Rd	GM		7653 - D785	MVD785	NR	R40H5930	NR	NR

278 - For Heavy Duty version use E-11287

282 - 10 1/2" Ring Gear, First Design; Use 3 3/8" Outside Diameter Axle Tubes

283 - 4 5/8" Drum Width

366 - 13" Dia Rotor - 8 Stud w/ 4.630" Dia CTR Pilot Hole

367 - 13" Dia Rotor - 8 Stud w/ 4.873" Dia CTR Pilot Hole

381 - Rotor and Hub One Piece Assembly W/O ABS Ring

405 - Rotor Only

MERITOR DRUM OR ROTOR NO.	CALIPER OR CYLINDER BORE SIZE	MERITOR CALIPER OR WHEEL CYLINDER (LEFT)	MERITOR CALIPER OR WHEEL CYLINDER (RIGHT)	MERITOR CALIPER OR WHEEL CYLINDER REPAIR KIT	MERITOR CALIPER PISTON	MERITOR MASTER CYLINDER	MERITOR MASTER CYLINDER KIT	MERITOR BRAKE HOSE (LEFT)	MERITOR BRAKE HOSE (RIGHT)
									GMC(Cont.)
									C-2500 SERIES- 3/4 TON - CONVENTIONAL CAB, PICKUP AND SUBURBAN(Cont.)
R44141186[381]	2-15/16 "	R42R55061	R42R55060	R4066848	R4090013S	-	-	-	-
R44141186[381]	2-15/16 "	R42R55061	R42R55060	R4066848	R4090013S	-	-	-	-
R44140408[283]	1 "	R4133608	R4133608	R4166620	NR	-	-	-	-
R44140408[283]	1 "	R4133608	R4133608	R4166620	NR	-	-	-	-
R44140363[282]	1-1/16 "	R4133709	R4133709	N/A	NR	-	-	-	-
R44140363[282]	1-1/16 "	R4133709	R4133709	N/A	NR	-	-	-	-
R44141186[381]	2-15/16 "	R42R55061	R42R55060	R4066848	R4090013S	-	-	-	-
R44141186[381]	2-15/16 "	R42R55061	R42R55060	R4066848	R4090013S	-	-	-	-
R44140408[283]	1 "	R4133608	R4133608	R4166620	NR	-	-	-	-
R44140408[283]	1 "	R4133608	R4133608	R4166620	NR	-	-	-	-
R44140363[282]	1-1/16 "	R4133709	R4133709	N/A	NR	-	-	-	-
R44140363[282]	1-1/16 "	R4133709	R4133709	N/A	NR	-	-	-	-
R44141186[381]	2-15/16 "	R42R55061	R42R55060	R4066848	R4090013S	-	-	-	-
R44141186[381]	2-15/16 "	R42R55061	R42R55060	R4066848	R4090013S	-	-	-	-
R44140408[283]	1 "	R4133608	R4133608	R4166620	NR	-	-	-	-
R44140408[283]	1 "	R4133608	R4133608	R4166620	NR	-	-	-	-
R44140363[282]	1-1/16 "	R4133709	R4133709	N/A	NR	-	-	-	-
R44140363[282]	1-1/16 "	R4133709	R4133709	N/A	NR	-	-	-	-
									GMC / CHEV
									2500 SIERRA , SILVERADO
R44145262[366]		R42R55854	R42R55853	-	-	-	-	-	-
R44145260[367]		R42R55854	R42R55853	-	-	-	-	-	-
R44145316	2-1/4 "	R42R55856	R42R55855	-	-	-	-	-	-
R44145261[405]	2-1/4 "	R42R55856	R42R55855	-	-	-	-	-	-
R44145262[366]		R42R55854	R42R55853	-	-	-	-	-	-
R44145260[367]		R42R55854	R42R55853	-	-	-	-	-	-
R44145316	2-1/4 "	R42R55856	R42R55855	-	-	-	-	-	-
R44145261[405]	2-1/4 "	R42R55856	R42R55855	-	-	-	-	-	-
R44145262[366]		R42R55854	R42R55853	-	-	-	-	-	-
R44145260[367]		R42R55854	R42R55853	-	-	-	-	-	-
R44145316	2-1/4 "	R42R55856	R42R55855	-	-	-	-	-	-
R44145261[405]	2-1/4 "	R42R55856	R42R55855	-	-	-	-	-	-
R44145262[366]		R42R55854	R42R55853	-	-	-	-	-	-
R44145260[367]		R42R55854	R42R55853	-	-	-	-	-	-
R44145316	2-1/4 "	R42R55856	R42R55855	-	-	-	-	-	-
R44145261[405]	2-1/4 "	R42R55856	R42R55855	-	-	-	-	-	-
R44145262[366]		R42R55854	R42R55853	-	-	-	-	-	-
R44145260[367]		R42R55854	R42R55853	-	-	-	-	-	-
R44145316	2-1/4 "	R42R55856	R42R55855	-	-	-	-	-	-
R44145261[405]	2-1/4 "	R42R55856	R42R55855	-	-	-	-	-	-
R44145260[367]		R42R55854	R42R55853	-	-	-	-	-	-

MAKE MODEL YEAR AXLE CODE AXLE WEIGHT	AXLE & BRK. TYPE	BRK. MFG.	BRAKE SIZE	FMSI	MERITOR DISC PAD OR BRAKE SHOE	MERITOR GUIDE PIN OR RETURN SPRING KIT	MERITOR CALIPER HWD. KIT OR RETURN SPRING KIT	MERITOR ADJUSTER KIT (LEFT WHEEL)	MERITOR ADJUSTER KIT (RIGHT WHEEL)
GMC / CHEV(Cont.)									
2500 SIERRA , SILVERADO(Cont.)									
2004									
	Rd	GM		7653 - D785	MVD785	NR	R40H5930	NR	NR
4x2 EXC. w/ 8600 GVWR Crew Cab	Fd	GM		7652 - D784	MVD784	NR	R40H5931	NR	NR
4x2 w/ 8600 GVWR Crew Cab	Fd	GM		7652 - D784	MVD784	NR	R40H5931	NR	NR
4x4	Rd	GM		7653 - D785	MVD785	NR	R40H5930	NR	NR
	Rd	GM		7653 - D785	MVD785	NR	R40H5930	NR	NR
4x4 EXC. w/ 8600 GVWR Crew Cab	Fd	GM		7652 - D784	MVD784	NR	R40H5931	NR	NR
4x4 w/ 8600 GVWR Crew Cab	Fd	GM		7652 - D784	MVD784	NR	R40H5931	NR	NR
2003									
4x2	Rd	GM		7653 - D785	MVD785	NR	R40H5930	NR	NR
	Rd	GM		7653 - D785	MVD785	NR	R40H5930	NR	NR
4x2 EXC. w/ 8600 GVWR Crew Cab	Fd	GM		7652 - D784	MVD784	NR	R40H5931	NR	NR
4x2 w/ 8600 GVWR Crew Cab	Fd	GM		7652 - D784	MVD784	NR	R40H5931	NR	NR
4x4	Rd	GM		7653 - D785	MVD785	NR	R40H5930	NR	NR
	Rd	GM		7653 - D785	MVD785	NR	R40H5930	NR	NR
4x4 EXC. w/ 8600 GVWR Crew Cab	Fd	GM		7652 - D784	MVD784	NR	R40H5931	NR	NR
4x4 w/ 8600 GVWR Crew Cab	Fd	GM		7652 - D784	MVD784	NR	R40H5931	NR	NR
2002									
4x2	Fd	GM		7652 - D784	MVD784	NR	R40H5931	NR	NR
	Rd	GM		7653 - D785	MVD785	NR	R40H5930	NR	NR
	Rd	GM		7653 - D785	MVD785	NR	R40H5930	NR	NR
4x4	Fd	GM		7652 - D784	MVD784	NR	R40H5931	NR	NR
	Rd	GM		7653 - D785	MVD785	NR	R40H5930	NR	NR
	Rd	GM		7653 - D785	MVD785	NR	R40H5930	NR	NR
2001									
4x2	Fd	GM		7652 - D784	MVD784	NR	R40H5931	NR	NR
	Rd	GM		7653 - D785	MVD785	NR	R40H5930	NR	NR
	Rd	GM		7653 - D785	MVD785	NR	R40H5930	NR	NR
4x4	Fd	GM		7652 - D784	MVD784	NR	R40H5931	NR	NR
	Rd	GM		7653 - D785	MVD785	NR	R40H5930	NR	NR
	Rd	GM		7653 - D785	MVD785	NR	R40H5930	NR	NR
2000									
4x2	Fd	GM		7652 - D784	MVD784	NR	R40H5931	NR	NR
	Rd	GM		7653 - D785	MVD785	NR	R40H5930	NR	NR
	Rd	GM		7653 - D785	MVD785	NR	R40H5930	NR	NR
4x4	Fd	GM		7652 - D784	MVD784	NR	R40H5931	NR	NR
	Rd	GM		7653 - D785	MVD785	NR	R40H5930	NR	NR
	Rd	GM		7653 - D785	MVD785	NR	R40H5930	NR	NR
1999									
4x2	Fd	GM		7652 - D784	MVD784	NR	R40H5931	NR	NR
	Rd	GM		7653 - D785	MVD785	NR	R40H5930	NR	NR
	Rd	GM		7653 - D785	MVD785	NR	R40H5930	NR	NR
4x4	Fd	GM		7652 - D784	MVD784	NR	R40H5931	NR	NR
	Rd	GM		7653 - D785	MVD785	NR	R40H5930	NR	NR
	Rd	GM		7653 - D785	MVD785	NR	R40H5930	NR	NR
3500 SIERRA , SILVERADO									
2005									
4x2	Rd	GM		7653 - D785	MVD785	NR	R40H5930	NR	NR
	Rd	GM		7653 - D785	MVD785	NR	R40H5930	NR	NR
4x2 EXC. w/ 8600 GVWR Crew Cab	Fd	GM		7652 - D784	MVD784	NR	R40H5931	NR	NR
4x2 w/ 8600 GVWR Crew Cab	Fd	GM		7652 - D784	MVD784	NR	R40H5931	NR	NR
4x4	Rd	GM		7653 - D785	MVD785	NR	R40H5930	NR	NR
	Rd	GM		7653 - D785	MVD785	NR	R40H5930	NR	NR

366 - 13" Dia Rotor - 8 Stud w/ 4.630" Dia CTR Pilot Hole 367 - 13" Dia Rotor - 8 Stud w/ 4.873" Dia CTR Pilot Hole 405 - Rotor Only

MERITOR DRUM OR ROTOR NO.	CALIPER OR CYLINDER BORE SIZE	MERITOR CALIPER OR WHEEL CYLINDER (LEFT)	MERITOR CALIPER OR WHEEL CYLINDER (RIGHT)	MERITOR CALIPER OR WHEEL CYLINDER REPAIR KIT	MERITOR CALIPER PISTON	MERITOR MASTER CYLINDER	MERITOR MASTER CYLINDER KIT	MERITOR BRAKE HOSE (LEFT)	MERITOR BRAKE HOSE (RIGHT)
									GMC / CHEV(Cont.)
									2500 SIERRA , SILVERADO(Cont.)
R44145262[366]		R42R55854	R42R55853	-	-	-	-	-	-
R44145316	2-1/4 "	R42R55856	R42R55855	-	-	-	-	-	-
R44145261[405]	2-1/4 "	R42R55856	R42R55855	-	-	-	-	-	-
R44145262[366]		R42R55854	R42R55853	-	-	-	-	-	-
R44145260[367]		R42R55854	R42R55853	-	-	-	-	-	-
R44145316	2-1/4 "	R42R55856	R42R55855	-	-	-	-	-	-
R44145261[405]	2-1/4 "	R42R55856	R42R55855	-	-	-	-	-	-
R44145262[366]		R42R55854	R42R55853	-	-	-	-	-	-
R44145260[367]		R42R55854	R42R55853	-	-	-	-	-	-
R44145316	2-1/4 "	R42R55856	R42R55855	-	-	-	-	-	-
R44145261[405]	2-1/4 "	R42R55856	R42R55855	-	-	-	-	-	-
R44145262[366]		R42R55854	R42R55853	-	-	-	-	-	-
R44145260[367]		R42R55854	R42R55853	-	-	-	-	-	-
R44145316	2-1/4 "	R42R55856	R42R55855	-	-	-	-	-	-
R44145261[405]	2-1/4 "	R42R55856	R42R55855	-	-	-	-	-	-
R44145261[405]	2-1/4 "	R42R55856	R42R55855	-	-	R4113607	-	-	-
R44145260[367]		R42R55854	R42R55853	-	-	-	-	-	-
R44145262[366]		R42R55854	R42R55853	-	-	-	-	-	-
R44145261[405]	2-1/4 "	R42R55856	R42R55855	-	-	R4113607	-	-	-
R44145260[367]		R42R55854	R42R55853	-	-	-	-	-	-
R44145262[366]		R42R55854	R42R55853	-	-	-	-	-	-
R44145261[405]	2-1/4 "	R42R55856	R42R55855	-	-	R4113607	-	-	-
R44145260[367]		R42R55854	R42R55853	-	-	-	-	-	-
R44145262[366]		R42R55854	R42R55853	-	-	-	-	-	-
R44145261[405]	2-1/4 "	R42R55856	R42R55855	-	-	R4113607	-	-	-
R44145260[367]		R42R55854	R42R55853	-	-	-	-	-	-
R44145262[366]		R42R55854	R42R55853	-	-	-	-	-	-
R44145261[405]	2-1/4 "	R42R55856	R42R55855	-	-	R4113607	-	R4578880	-
R44145260[367]		R42R55854	R42R55853	-	-	-	-	R4578912	-
R44145262[366]		R42R55854	R42R55853	-	-	-	-	R4578843	R4578843
R44145261[405]	2-1/4 "	R42R55856	R42R55855	-	-	R4113607	-	R4578880	-
R44145260[367]		R42R55854	R42R55853	-	-	-	-	R4578912	-
R44145262[366]		R42R55854	R42R55853	-	-	-	-	R4578843	R4578843
R44145261[405]	2-1/4 "	R42R55856	R42R55855	-	-	R4113607	-	R4578880	-
R44145262[366]		R42R55854	R42R55853	-	-	-	-	R4578843	R4578843
R44145260[367]		R42R55854	R42R55853	-	-	-	-	R4578912	-
R44145261[405]	2-1/4 "	R42R55856	R42R55855	-	-	R4113607	-	R4578880	-
R44145260[367]		R42R55854	R42R55853	-	-	-	-	R4578912	-
R44145262[366]		R42R55854	R42R55853	-	-	-	-	R4578843	R4578843
									3500 SIERRA , SILVERADO
R44145262[366]		R42R55854	R42R55853	-	-	-	-	-	-
R44145260[367]		R42R55854	R42R55853	-	-	-	-	-	-
R44145316	2-1/4 "	R42R55856	R42R55855	-	-	-	-	-	-
R44145261[405]	2-1/4 "	R42R55856	R42R55855	-	-	-	-	-	-
R44145262[366]		R42R55854	R42R55853	-	-	-	-	-	-
R44145260[367]		R42R55854	R42R55853	-	-	-	-	-	-

MAKE MODEL YEAR AXLE CODE AXLE WEIGHT	AXLE & BRK. TYPE	BRK. MFG.	BRAKE SIZE	FMSI	MERITOR DISC PAD OR BRAKE SHOE	MERITOR GUIDE PIN OR RETURN SPRING KIT	MERITOR CALIPER HWD. KIT OR RETURN SPRING KIT	MERITOR ADJUSTER KIT (LEFT WHEEL)	MERITOR ADJUSTER KIT (RIGHT WHEEL)
GMC / CHEV(Cont.)									
3500 SIERRA , SILVERADO(Cont.)									
2005									
4x4 EXC. w/ 8600 GVWR Crew Cab	Fd	GM		7652 - D784	MVD784	NR	R40H5931	NR	NR
4x4 w/ 8600 GVWR Crew Cab	Fd	GM		7652 - D784	MVD784	NR	R40H5931	NR	NR
2004									
4x2	Rd	GM		7653 - D785	MVD785	NR	R40H5930	NR	NR
	Rd	GM		7653 - D785	MVD785	NR	R40H5930	NR	NR
4x2 EXC. w/ 8600 GVWR Crew Cab	Fd	GM		7652 - D784	MVD784	NR	R40H5931	NR	NR
4x2 w/ 8600 GVWR Crew Cab	Fd	GM		7652 - D784	MVD784	NR	R40H5931	NR	NR
4x4	Rd	GM		7653 - D785	MVD785	NR	R40H5930	NR	NR
	Rd	GM		7653 - D785	MVD785	NR	R40H5930	NR	NR
4x4 EXC. w/ 8600 GVWR Crew Cab	Fd	GM		7652 - D784	MVD784	NR	R40H5931	NR	NR
4x4 w/ 8600 GVWR Crew Cab	Fd	GM		7652 - D784	MVD784	NR	R40H5931	NR	NR
2003									
4x2	Rd	GM		7653 - D785	MVD785	NR	R40H5930	NR	NR
	Rd	GM		7653 - D785	MVD785	NR	R40H5930	NR	NR
4x2 EXC. w/ 8600 GVWR Crew Cab	Fd	GM		7652 - D784	MVD784	NR	R40H5931	NR	NR
4x2 w/ 8600 GVWR Crew Cab	Fd	GM		7652 - D784	MVD784	NR	R40H5931	NR	NR
4x4	Rd	GM		7653 - D785	MVD785	NR	R40H5930	NR	NR
	Rd	GM		7653 - D785	MVD785	NR	R40H5930	NR	NR
4x4 EXC. w/ 8600 GVWR Crew Cab	Fd	GM		7652 - D784	MVD784	NR	R40H5931	NR	NR
4x4 w/ 8600 GVWR Crew Cab	Fd	GM		7652 - D784	MVD784	NR	R40H5931	NR	NR
2002									
4x2	Fd	GM		7652 - D784	MVD784	NR	R40H5931	NR	NR
	Rd	GM		7653 - D785	MVD785	NR	R40H5930	NR	NR
	Rd	GM		7653 - D785	MVD785	NR	R40H5930	NR	NR
4x4	Fd	GM		7652 - D784	MVD784	NR	R40H5931	NR	NR
	Rd	GM		7653 - D785	MVD785	NR	R40H5930	NR	NR
	Rd	GM		7653 - D785	MVD785	NR	R40H5930	NR	NR
2001									
4x2	Fd	GM		7652 - D784	MVD784	NR	R40H5931	NR	NR
	Rd	GM		7653 - D785	MVD785	NR	R40H5930	NR	NR
	Rd	GM		7653 - D785	MVD785	NR	R40H5930	NR	NR
4x4	Fd	GM		7652 - D784	MVD784	NR	R40H5931	NR	NR
	Rd	GM		7653 - D785	MVD785	NR	R40H5930	NR	NR
	Rd	GM		7653 - D785	MVD785	NR	R40H5930	NR	NR
2000									
4x2	Fd	GM		7652 - D784	MVD784	NR	R40H5931	NR	NR
	Rd	GM		7653 - D785	MVD785	NR	R40H5930	NR	NR
	Rd	GM		7653 - D785	MVD785	NR	R40H5930	NR	NR
4x4	Fd	GM		7652 - D784	MVD784	NR	R40H5931	NR	NR
	Rd	GM		7653 - D785	MVD785	NR	R40H5930	NR	NR
	Rd	GM		7653 - D785	MVD785	NR	R40H5930	NR	NR
1999									
4x2	Fd	GM		7652 - D784	MVD784	NR	R40H5931	NR	NR
	Rd	GM		7653 - D785	MVD785	NR	R40H5930	NR	NR
	Rd	GM		7653 - D785	MVD785	NR	R40H5930	NR	NR
4x4	Fd	GM		7652 - D784	MVD784	NR	R40H5931	NR	NR
	Rd	GM		7653 - D785	MVD785	NR	R40H5930	NR	NR
	Rd	GM		7653 - D785	MVD785	NR	R40H5930	NR	NR
40, 4000 SERIES-20,000 lb. GVW									
1997									
W4S042	Fd			7425 - D675	MD675	N/A	N/A	NR	NR
	Fd			7425 - D546	MD675	N/A	N/A	NR	NR

311 - Power Brakes, Stripped Chassis, Front Disc Brakes
366 - 13" Dia Rotor - 8 Stud w/ 4.630" Dia CTR Pilot Hole
367 - 13" Dia Rotor - 8 Stud w/ 4.873" Dia CTR Pilot Hole
405 - Rotor Only

MERITOR DRUM OR ROTOR NO.	CALIPER OR CYLINDER BORE SIZE	MERITOR CALIPER OR WHEEL CYLINDER (LEFT)	MERITOR CALIPER OR WHEEL CYLINDER (RIGHT)	MERITOR CALIPER OR WHEEL CYLINDER REPAIR KIT	MERITOR CALIPER PISTON	MERITOR MASTER CYLINDER	MERITOR MASTER CYLINDER KIT	MERITOR BRAKE HOSE (LEFT)	MERITOR BRAKE HOSE (RIGHT)
									GMC / CHEV(Cont.)
									3500 SIERRA , SILVERADO(Cont.)
R44145316	2-1/4 "	R42R55856	R42R55855	-	-	-	-	-	-
R44145261[405]	2-1/4 "	R42R55856	R42R55855	-	-	-	-	-	-
R44145262[366]		R42R55854	R42R55853	-	-	-	-	-	-
R44145260[367]		R42R55854	R42R55853	-	-	-	-	-	-
R44145316	2-1/4 "	R42R55856	R42R55855	-	-	-	-	-	-
R44145261[405]	2-1/4 "	R42R55856	R42R55855	-	-	-	-	-	-
R44145260[367]		R42R55854	R42R55853	-	-	-	-	-	-
R44145262[366]		R42R55854	R42R55853	-	-	-	-	-	-
R44145316	2-1/4 "	R42R55856	R42R55855	-	-	-	-	-	-
R44145261[405]	2-1/4 "	R42R55856	R42R55855	-	-	-	-	-	-
R44145262[366]		R42R55854	R42R55853	-	-	-	-	-	-
R44145260[367]		R42R55854	R42R55853	-	-	-	-	-	-
R44145316	2-1/4 "	R42R55856	R42R55855	-	-	-	-	-	-
R44145261[405]	2-1/4 "	R42R55856	R42R55855	-	-	-	-	-	-
R44145262[366]		R42R55854	R42R55853	-	-	-	-	-	-
R44145260[367]		R42R55854	R42R55853	-	-	-	-	-	-
R44145316	2-1/4 "	R42R55856	R42R55855	-	-	-	-	-	-
R44145261[405]	2-1/4 "	R42R55856	R42R55855	-	-	-	-	-	-
R44145261[405]	2-1/4 "	R42R55856	R42R55855	-	-	R4113607	-	-	-
R44145260[367]		R42R55854	R42R55853	-	-	-	-	-	-
R44145262[366]		R42R55854	R42R55853	-	-	-	-	-	-
R44145261[405]	2-1/4 "	R42R55856	R42R55855	-	-	R4113607	-	-	-
R44145260[367]		R42R55854	R42R55853	-	-	-	-	-	-
R44145262[366]		R42R55854	R42R55853	-	-	-	-	-	-
R44145261[405]	2-1/4 "	R42R55856	R42R55855	-	-	R4113607	-	-	-
R44145262[366]		R42R55854	R42R55853	-	-	-	-	-	-
R44145260[367]		R42R55854	R42R55853	-	-	-	-	-	-
R44145261[405]	2-1/4 "	R42R55856	R42R55855	-	-	R4113607	-	-	-
R44145262[366]		R42R55854	R42R55853	-	-	-	-	-	-
R44145260[367]		R42R55854	R42R55853	-	-	-	-	-	-
R44145261[405]	2-1/4 "	R42R55856	R42R55855	-	-	R4113607	-	R4578880	-
R44145262[366]		R42R55854	R42R55853	-	-	-	-	R4578843	R4578843
R44145260[367]		R42R55854	R42R55853	-	-	-	-	R4578912	-
R44145261[405]	2-1/4 "	R42R55856	R42R55855	-	-	R4113607	-	R4578880	-
R44145260[367]		R42R55854	R42R55853	-	-	-	-	R4578912	-
R44145262[366]		R42R55854	R42R55853	-	-	-	-	R4578843	R4578843
R44145261[405]	2-1/4 "	R42R55856	R42R55855	-	-	R4113607	-	R4578880	-
R44145262[366]		R42R55854	R42R55853	-	-	-	-	R4578843	R4578843
R44145260[367]		R42R55854	R42R55853	-	-	-	-	R4578912	-
R44145261[405]	2-1/4 "	R42R55856	R42R55855	-	-	R4113607	-	R4578880	-
R44145262[366]		R42R55854	R42R55853	-	-	-	-	R4578843	R4578843
R44145260[367]		R42R55854	R42R55853	-	-	-	-	R4578912	-
									40, 4000 SERIES-20,000 lb. GVW
N/A		-	-	R4066306	R4090126S	-	-	-	-
R44141730[405]		-	-	R4066306	R4090126S	R4113182[311]	R4110409	R4578267	R4578267

MAKE MODEL YEAR AXLE CODE AXLE WEIGHT	AXLE & BRK. TYPE	BRK. MFG.	BRAKE SIZE	FMSI	MERITOR DISC PAD OR BRAKE SHOE	MERITOR GUIDE PIN OR RETURN SPRING KIT	MERITOR CALIPER HWD. KIT OR RETURN SPRING KIT	MERITOR ADJUSTER KIT (LEFT WHEEL)	MERITOR ADJUSTER KIT (RIGHT WHEEL)
GMC / CHEV(Cont.)									
40, 4000 SERIES-20,000 lb. GVW(Cont.)									
1997									
	Fd			7425 - D546	MD675	N/A	N/A	NR	NR
	Fd			7425 - D546	MD675	N/A	N/A	NR	NR
	Fd			7425 - D546	MD675	N/A	N/A	NR	NR
1996									
	Fd			7425 - D546	MD675	N/A	N/A	NR	NR
	Fd			7425 - D675	MD675	N/A	N/A	NR	NR
	Fd			7425 - D546	MD675	N/A	N/A	NR	NR
	Fd			7425 - D546	MD675	N/A	N/A	NR	NR
	Fd			7425 - D546	MD675	N/A	N/A	NR	NR
1995									
					R46735721[342]	R41207361	R40H9238	NR	NR
					R46735721[342]	R41207361	R40H9238	NR	NR
					R46735721[342]	R41207361	R40H9238	NR	NR
					R46735721[342]	R41207361	R40H9238	NR	NR
					R46735721[342]	R41207361	R40H9238	NR	NR
					R46735721[342]	R41207361	R40H9238	NR	NR
					R46735721[342]	R41207361	R40H9238	NR	NR
					R46735721[342]	R41207361	R40H9238	NR	NR
	Fd			7425 - D546	MD675	N/A	N/A	NR	NR
	Fd			7425 - D546	MD675	N/A	N/A	NR	NR
	Fd			7425 - D546	MD675	N/A	N/A	NR	NR
	Fd			7425 - D546	MD675	N/A	N/A	NR	NR
	Fm		320mm x 75mm	1417 - S726	R46735721[342]	R41207361	R40H9238	NR	NR
	Fm		320mm x 75mm	1417 - S726	R46735721[342]	R41207361	R40H9238	NR	NR
	Fm		320mm x 75mm	1417 - S726	R46735721[342]	R41207361	R40H9238	NR	NR
	Fm		320mm x 75mm	1417 - S726	R46735721[342]	R41207361	R40H9238	NR	NR
	Fm		320mm x 75mm	1417 - S726	R46735721[342]	R41207361	R40H9238	NR	NR
	Fm		320mm x 75mm	1417 - S726	R46735721[342]	R41207361	R40H9238	NR	NR
	Fm		320mm x 75mm	1417 - S726	R46735721[342]	R41207361	R40H9238	NR	NR
	Fm		320mm x 75mm	1417 - S726	R46735721[342]	R41207361	R40H9238	NR	NR
	Ra		11-13/16"x2-61/64"	1454 - S668	N/A	N/A	N/A	N/A	N/A
	Rm		320mm x 100mm	1482 - S699	R46699	N/A	N/A	N/A	N/A
	Rm		320mm x 100mm	1482 - S699	R46699	N/A	N/A	N/A	N/A
	Rm		320mm x 75mm	1417 - S726	R46735721[342]	R41207361	R40H9238	NR	NR
	Rm		320mm x 75mm	1417 - S726	R46735721[342]	R41207361	R40H9238	NR	NR
	Rm		320mm x 75mm	1417 - S726	R46735721[342]	R41207361	R40H9238	NR	NR
	Rm		320mm x 75mm	1417 - S726	R46735721[342]	R41207361	R40H9238	NR	NR
1994									
					R46735721[342]	R41207361	R40H9238	NR	NR
					R46735721[342]	R41207361	R40H9238	NR	NR
					R46735721[342]	R41207361	R40H9238	NR	NR
					R46735721[342]	R41207361	R40H9238	NR	NR
					R46735721[342]	R41207361	R40H9238	NR	NR
					R46735721[342]	R41207361	R40H9238	NR	NR
					R46735721[342]	R41207361	R40H9238	NR	NR
					R46735721[342]	R41207361	R40H9238	NR	NR
	Fd			7425 - D546	MD675	N/A	N/A	NR	NR
	Fd			7425 - D546	MD675	N/A	N/A	NR	NR
	Fd			7425 - D546	MD675	N/A	N/A	NR	NR
	Fd			7425 - D546	MD675	N/A	N/A	NR	NR
	Fm		320mm x 75mm	1417 - S726	R46735721[342]	R41207361	R40H9238	NR	NR
	Fm		320mm x 75mm	1417 - S726	R46735721[342]	R41207361	R40H9238	NR	NR
	Fm		320mm x 75mm	1417 - S726	R46735721[342]	R41207361	R40H9238	NR	NR
	Fm		320mm x 75mm	1417 - S726	R46735721[342]	R41207361	R40H9238	NR	NR
	Fm		320mm x 75mm	1417 - S726	R46735721[342]	R41207361	R40H9238	NR	NR
	Fm		320mm x 75mm	1417 - S726	R46735721[342]	R41207361	R40H9238	NR	NR
	Fm		320mm x 75mm	1417 - S726	R46735721[342]	R41207361	R40H9238	NR	NR
	Fm		320mm x 75mm	1417 - S726	R46735721[342]	R41207361	R40H9238	NR	NR
	Ra		11-13/16"x2-61/64"	1454 - S668	N/A	N/A	N/A	N/A	N/A
	Rm		320mm x 100mm	1482 - S699	R46699	N/A	N/A	N/A	N/A
	Rm		320mm x 100mm	1482 - S699	R46699	N/A	N/A	N/A	N/A
	Rm		320mm x 75mm	1417 - S726	R46735721[342]	R41207361	R40H9238	NR	NR

53 - Power Brakes
329 - Forward
342 - Use E-7358 for Lining and Rivet Set
54 - Manual Brakes
330 - Rearward
405 - Rotor Only
311 - Power Brakes, Stripped Chassis, Front Disc Brakes
336 - Manual Brakes, Stripped Chassis, Front Disc Brakes

MERITOR DRUM OR ROTOR NO.	CALIPER OR CYLINDER BORE SIZE	MERITOR CALIPER OR WHEEL CYLINDER (LEFT)	MERITOR CALIPER OR WHEEL CYLINDER (RIGHT)	MERITOR CALIPER OR WHEEL CYLINDER REPAIR KIT	MERITOR CALIPER PISTON	MERITOR MASTER CYLINDER	MERITOR MASTER CYLINDER KIT	MERITOR BRAKE HOSE (LEFT)	MERITOR BRAKE HOSE (RIGHT)
GMC / CHEV(Cont.)									
40, 4000 SERIES-20,000 lb. GVW(Cont.)									
R44141730[405]		-	-	R4066306	R4090126S	N/A[336]	N/A	R4578267	R4578267
R44141730[405]		-	-	R4066306	R4090126S	N/A[54]	N/A	R4578267	R4578267
R44141730[405]		-	-	R4066306	R4090126S	R4113123[53]	R4110409	R4578267	R4578267
R44141730[405]		-	-	R4066306	R4090126S	R4113182[311]	R4110409	R4578267	R4578267
N/A		-	-	R4066306	R4090126S	-	-	-	-
R44141730[405]		-	-	R4066306	R4090126S	R4113123[53]	R4110409	R4578267	R4578267
R44141730[405]		-	-	R4066306	R4090126S	N/A[336]	N/A	R4578267	R4578267
R44141730[405]		-	-	R4066306	R4090126S	N/A[54]	N/A	R4578267	R4578267
N/A		R417363	R417365[329]	R417382	NR	N/A[54]	N/A	R4578267	R4578267
N/A		R41207364	R41207366[330]	R417382	NR	N/A[54]	N/A	R4578267	R4578267
N/A		R417379	R41207375	R417382	NR	N/A[336]	N/A	R4578267	R4578267
N/A		R417379	R41207381	R417382	NR	N/A[336]	N/A	R4578267	R4578267
N/A		R417379	R41207375	R417382	NR	N/A[54]	N/A	R4578267	R4578267
N/A		R41207364	R41207366[330]	R417382	NR	N/A[336]	N/A	R4578267	R4578267
N/A		R417379	R41207381	R417382	NR	N/A[54]	N/A	R4578267	R4578267
N/A		R417363	R417365[329]	R417382	NR	N/A[336]	N/A	R4578267	R4578267
R44141730[405]		-	-	R4066306	R4090126S	N/A[336]	N/A	R4578267	R4578267
R44141730[405]		-	-	R4066306	R4090126S	N/A[54]	N/A	R4578267	R4578267
R44141730[405]		-	-	R4066306	R4090126S	R4113123[53]	R4110409	R4578267	R4578267
R44141730[405]		-	-	R4066306	R4090126S	R4113182[311]	R4110409	R4578267	R4578267
N/A	1-1/16 "	R417379	R41207381	R417382	NR	R4113182[311]	R4110409	R4578267	R4578267
N/A	1-1/16 "	R41207364	R41207366[330]	R417382	NR	R4113182[311]	R4110409	R4578267	R4578267
N/A	1-1/16 "	R417363	R417365[329]	R417382	NR	R4113182[311]	R4110409	R4578267	R4578267
N/A	1-1/16 "	R417379	R41207381	R417382	NR	R4113123[53]	R4110409	R4578267	R4578267
N/A	1-1/16 "	R41207364	R41207366[330]	R417382	NR	R4113123[53]	R4110409	R4578267	R4578267
N/A	1-1/16 "	R417379	R41207375	R417382	NR	R4113123[53]	R4110409	R4578267	R4578267
N/A	1-1/16 "	R417379	R41207375	R417382	NR	R4113182[311]	R4110409	R4578267	R4578267
N/A	1-1/16 "	R417363	R417365[329]	R417382	NR	R4113123[53]	R4110409	R4578267	R4578267
N/A		-	-	N/A	NR	-	-	N/A	N/A
N/A	1 "	-	-	N/A	NR	-	-	N/A	N/A
N/A	1 "	-	-	N/A	NR	-	-	N/A	N/A
N/A	1-1/16 "	R417379	R41207375	R417382	NR	-	-	N/A	N/A
N/A	1-1/16 "	R417379	R41207381	R417382	NR	-	-	N/A	N/A
N/A	1-1/16 "	R417372	R41207375[329]	R417382	NR	-	-	N/A	N/A
N/A	1-1/16 "	R417372	R41207374[330]	R417382	NR	-	-	N/A	N/A
N/A		R41207364	R41207366[330]	R417382	NR	N/A[336]	N/A	R4578267	R4578267
N/A		R417363	R417365[329]	R417382	NR	N/A[54]	N/A	R4578267	R4578267
N/A		R417379	R41207381	R417382	NR	N/A[336]	N/A	R4578267	R4578267
N/A		R417379	R41207375	R417382	NR	N/A[54]	N/A	R4578267	R4578267
N/A		R417363	R417365[329]	R417382	NR	N/A[336]	N/A	R4578267	R4578267
N/A		R417379	R41207375	R417382	NR	N/A[336]	N/A	R4578267	R4578267
N/A		R41207364	R41207366[330]	R417382	NR	N/A[54]	N/A	R4578267	R4578267
N/A		R417379	R41207381	R417382	NR	N/A[54]	N/A	R4578267	R4578267
R44141730[405]		-	-	R4066306	R4090126S	N/A[336]	N/A	R4578267	R4578267
R44141730[405]		-	-	R4066306	R4090126S	R4113182[311]	R4110409	R4578267	R4578267
R44141730[405]		-	-	R4066306	R4090126S	N/A[54]	-	R4578267	R4578267
R44141730[405]		-	-	R4066306	R4090126S	R4113123[53]	R4110409	R4578267	R4578267
N/A	1-1/16 "	R417379	R41207375	R417382	NR	R4113182[311]	R4110409	R4578267	R4578267
N/A	1-1/16 "	R417363	R417365[329]	R417382	NR	R4113182[311]	R4110409	R4578267	R4578267
N/A	1-1/16 "	R417379	R41207381	R417382	NR	R4113182[311]	R4110409	R4578267	R4578267
N/A	1-1/16 "	R417379	R41207375	R417382	NR	R4113123[53]	R4110409	R4578267	R4578267
N/A	1-1/16 "	R417379	R41207381	R417382	NR	R4113123[53]	R4110409	R4578267	R4578267
N/A	1-1/16 "	R41207364	R41207366[330]	R417382	NR	R4113123[53]	R4110409	R4578267	R4578267
N/A	1-1/16 "	R41207364	R41207366[330]	R417382	NR	R4113182[311]	R4110409	R4578267	R4578267
N/A	1-1/16 "	R417363	R417365[329]	R417382	NR	R4113123[53]	R4110409	R4578267	R4578267
N/A		-	-	N/A	NR	-	-	-	-
N/A	1 "	-	-	N/A	NR	-	-	N/A	N/A
N/A	1 "	-	-	N/A	NR	-	-	N/A	N/A
N/A	1-1/16 "	R417379	R41207381	R417382	NR	-	-	N/A	N/A

MAKE MODEL YEAR AXLE CODE AXLE WEIGHT	AXLE & BRK. TYPE	BRK. MFG.	BRAKE SIZE	FMSI	MERITOR DISC PAD OR BRAKE SHOE	MERITOR GUIDE PIN OR RETURN SPRING KIT	MERITOR CALIPER HWD. KIT OR RETURN SPRING KIT	MERITOR ADJUSTER KIT (LEFT WHEEL)	MERITOR ADJUSTER KIT (RIGHT WHEEL)
GMC / CHEV(Cont.)									
40, 4000 SERIES-20,000 lb. GVW(Cont.)									
1994									
W4S042	Rm		320mm x 75mm	1417 - S726	R46735721[342]	R41207361	R40H9238	NR	NR
	Rm		320mm x 75mm	1417 - S726	R46735721[342]	R41207361	R40H9238	NR	NR
	Rm		320mm x 75mm	1417 - S726	R46735721[342]	R41207361	R40H9238	NR	NR
1993									
					R46735721[342]	R41207361	R40H9238	NR	NR
					R46735721[342]	R41207361	R40H9238	NR	NR
					R46735721[342]	R41207361	R40H9238	NR	NR
					R46735721[342]	R41207361	R40H9238	NR	NR
					R46735721[342]	R41207361	R40H9238	NR	NR
					R46735721[342]	R41207361	R40H9238	NR	NR
					R46735721[342]	R41207361	R40H9238	NR	NR
					R46735721[342]	R41207361	R40H9238	NR	NR
	Fd			7425 - D546	MD675	N/A	N/A	NR	NR
	Fd			7425 - D546	MD675	N/A	N/A	NR	NR
	Fd			7425 - D546	MD675	N/A	N/A	NR	NR
	Fd			7425 - D546	MD675	N/A	N/A	NR	NR
	Fm		320mm x 75mm	1417 - S726	R46735721[342]	R41207361	R40H9238	NR	NR
	Fm		320mm x 75mm	1417 - S726	R46735721[342]	R41207361	R40H9238	NR	NR
	Fm		320mm x 75mm	1417 - S726	R46735721[342]	R41207361	R40H9238	NR	NR
	Fm		320mm x 75mm	1417 - S726	R46735721[342]	R41207361	R40H9238	NR	NR
	Fm		320mm x 75mm	1417 - S726	R46735721[342]	R41207361	R40H9238	NR	NR
	Fm		320mm x 75mm	1417 - S726	R46735721[342]	R41207361	R40H9238	NR	NR
	Fm		320mm x 75mm	1417 - S726	R46735721[342]	R41207361	R40H9238	NR	NR
	Fm		320mm x 75mm	1417 - S726	R46735721[342]	R41207361	R40H9238	NR	NR
	Ra		11-13/16"x2-61/64"	1454 - S668	N/A	N/A	N/A	N/A	N/A
	Rm		320mm x 100mm	1482 - S699	R46699	N/A	N/A	N/A	N/A
	Rm		320mm x 100mm	1482 - S699	R46699	N/A	N/A	N/A	N/A
	Rm		320mm x 75mm	1417 - S726	R46735721[342]	R41207361	R40H9238	NR	NR
	Rm		320mm x 75mm	1417 - S726	R46735721[342]	R41207361	R40H9238	NR	NR
	Rm		320mm x 75mm	1417 - S726	R46735721[342]	R41207361	R40H9238	NR	NR
	Rm		320mm x 75mm	1417 - S726	R46735721[342]	R41207361	R40H9238	NR	NR
1992									
					R46735721[342]	R41207361	R40H9238	NR	NR
					R46735721[342]	R41207361	R40H9238	NR	NR
					R46735721[342]	R41207361	R40H9238	NR	NR
					R46735721[342]	R41207361	R40H9238	NR	NR
					R46735721[342]	R41207361	R40H9238	NR	NR
					R46735721[342]	R41207361	R40H9238	NR	NR
					R46735721[342]	R41207361	R40H9238	NR	NR
					R46735721[342]	R41207361	R40H9238	NR	NR
	Fd			7425 - D546	MD675	N/A	N/A	NR	NR
	Fd			7425 - D546	MD675	N/A	N/A	NR	NR
	Fd			7425 - D546	MD675	N/A	N/A	NR	NR
	Fd			7425 - D546	MD675	N/A	N/A	NR	NR
	Fm		320mm x 75mm	1417 - S726	R46735721[342]	R41207361	R40H9238	NR	NR
	Fm		320mm x 75mm	1417 - S726	R46735721[342]	R41207361	R40H9238	NR	NR
	Fm		320mm x 75mm	1417 - S726	R46735721[342]	R41207361	R40H9238	NR	NR
	Fm		320mm x 75mm	1417 - S726	R46735721[342]	R41207361	R40H9238	NR	NR
	Fm		320mm x 75mm	1417 - S726	R46735721[342]	R41207361	R40H9238	NR	NR
	Fm		320mm x 75mm	1417 - S726	R46735721[342]	R41207361	R40H9238	NR	NR
	Fm		320mm x 75mm	1417 - S726	R46735721[342]	R41207361	R40H9238	NR	NR
	Fm		320mm x 75mm	1417 - S726	R46735721[342]	R41207361	R40H9238	NR	NR
	Ra		11-13/16"x2-61/64"	1454 - S668	N/A	N/A	N/A	N/A	N/A
	Rm		320mm x 100mm	1482 - S699	R46699	N/A	N/A	N/A	N/A
	Rm		320mm x 100mm	1482 - S699	R46699	N/A	N/A	N/A	N/A
	Rm		320mm x 75mm	1417 - S726	R46735721[342]	R41207361	R40H9238	NR	NR
	Rm		320mm x 75mm	1417 - S726	R46735721[342]	R41207361	R40H9238	NR	NR
	Rm		320mm x 75mm	1417 - S726	R46735721[342]	R41207361	R40H9238	NR	NR
	Rm		320mm x 75mm	1417 - S726	R46735721[342]	R41207361	R40H9238	NR	NR
1991									
					R46735721[342]	R41207361	R40H9238	NR	NR
					R46735721[342]	R41207361	R40H9238	NR	NR

53 - Power Brakes
329 - Forward
342 - Use E-7358 for Lining and Rivet Set
54 - Manual Brakes
330 - Rearward
405 - Rotor Only
311 - Power Brakes, Stripped Chassis, Front Disc Brakes
336 - Manual Brakes, Stripped Chassis, Front Disc Brakes

MERITOR DRUM OR ROTOR NO.	CALIPER OR CYLINDER BORE SIZE	MERITOR CALIPER OR WHEEL CYLINDER (LEFT)	MERITOR CALIPER OR WHEEL CYLINDER (RIGHT)	MERITOR CALIPER OR WHEEL CYLINDER REPAIR KIT	MERITOR CALIPER PISTON	MERITOR MASTER CYLINDER	MERITOR MASTER CYLINDER KIT	MERITOR BRAKE HOSE (LEFT)	MERITOR BRAKE HOSE (RIGHT)
									GMC / CHEV(Cont.)
									40, 4000 SERIES-20,000 lb. GVW(Cont.)
N/A	1-1/16 "	R417379	R41207375	R417382	NR	-	-	-	-
N/A	1-1/16 "	R417372	R41207375[329]	R417382	NR	-	-	N/A	N/A
N/A	1-1/16 "	R417372	R41207374[330]	R417382	NR	-	-	N/A	N/A
N/A		R417363	R417365[329]	R417382	NR	N/A[336]	N/A	R4578267	R4578267
N/A		R417379	R41207381	R417382	NR	N/A[336]	N/A	R4578267	R4578267
N/A		R417379	R41207381	R417382	NR	N/A[54]	N/A	R4578267	R4578267
N/A		R417363	R417365[329]	R417382	NR	N/A[54]	N/A	R4578267	R4578267
N/A		R41207364	R41207366[330]	R417382	NR	N/A[336]	N/A	R4578267	R4578267
N/A		R417379	R41207375	R417382	NR	N/A[336]	N/A	R4578267	R4578267
N/A		R417379	R41207375	R417382	NR	N/A[54]	N/A	R4578267	R4578267
N/A		R41207364	R41207366[330]	R417382	NR	N/A[54]	N/A	R4578267	R4578267
R44141730[405]		-	-	R4066306	R4090126S	N/A[336]	N/A	R4578267	R4578267
R44141730[405]		-	-	R4066306	R4090126S	R4113182[311]	R4110409	R4578267	R4578267
R44141730[405]		-	-	R4066306	R4090126S	N/A[54]	N/A	R4578267	R4578267
R44141730[405]		-	-	R4066306	R4090126S	R4113123[53]	R4110409	R4578267	R4578267
N/A	1-1/16 "	R417379	R41207381	R417382	NR	R4113182[311]	R4110409	R4578267	R4578267
N/A	1-1/16 "	R41207364	R41207366[330]	R417382	NR	R4113182[311]	R4110409	R4578267	R4578267
N/A	1-1/16 "	R417363	R417365[329]	R417382	NR	R4113182[311]	R4110409	R4578267	R4578267
N/A	1-1/16 "	R417379	R41207381	R417382	NR	R4113123[53]	R4110409	R4578267	R4578267
N/A	1-1/16 "	R417363	R417365[329]	R417382	NR	R4113123[53]	R4110409	R4578267	R4578267
N/A	1-1/16 "	R41207364	R41207366[330]	R417382	NR	R4113123[53]	R4110409	R4578267	R4578267
N/A	1-1/16 "	R417379	R41207375	R417382	NR	R4113123[53]	R4110409	R4578267	R4578267
N/A	1-1/16 "	R417379	R41207375	R417382	NR	R4113182[311]	R4110409	R4578267	R4578267
N/A		-	-	N/A	NR	-	-	N/A	N/A
N/A	1 "	-	-	N/A	NR	-	-	N/A	N/A
N/A	1 "	-	-	N/A	NR	-	-	N/A	N/A
N/A	1-1/16 "	R417372	R41207375[329]	R417382	NR	-	-	N/A	N/A
N/A	1-1/16 "	R417379	R41207375	R417382	NR	-	-	N/A	N/A
N/A	1-1/16 "	R417379	R41207381	R417382	NR	-	-	N/A	N/A
N/A	1-1/16 "	R417372	R41207374[330]	R417382	NR	-	-	N/A	N/A
N/A		R41207364	R41207366[330]	R417382	NR	N/A[336]	N/A	R4578267	R4578267
N/A		R417363	R417365[329]	R417382	NR	N/A[54]	N/A	R4578267	R4578267
N/A		R417379	R41207375	R417382	NR	N/A[336]	N/A	R4578267	R4578267
N/A		R41207364	R41207366[330]	R417382	NR	N/A[54]	N/A	R4578267	R4578267
N/A		R417379	R41207375	R417382	NR	N/A[54]	N/A	R4578267	R4578267
N/A		R417379	R41207381	R417382	NR	N/A[54]	N/A	R4578267	R4578267
N/A		R417379	R41207381	R417382	NR	N/A[336]	N/A	R4578267	R4578267
N/A		R417363	R417365[329]	R417382	NR	N/A[336]	N/A	R4578267	R4578267
R44141730[405]		-	-	R4066306	R4090126S	N/A[336]	N/A	R4578267	R4578267
R44141730[405]		-	-	R4066306	R4090126S	R4113182[311]	R4110409	R4578267	R4578267
R44141730[405]		-	-	R4066306	R4090126S	R4113123[53]	R4110409	R4578267	R4578267
R44141730[405]		-	-	R4066306	R4090126S	N/A[54]	N/A	R4578267	R4578267
N/A	1-1/16 "	R41207364	R41207366[330]	R417382	NR	R4113123[53]	R4110409	R4578267	R4578267
N/A	1-1/16 "	R417363	R417365[329]	R417382	NR	R4113182[311]	R4110409	R4578267	R4578267
N/A	1-1/16 "	R417379	R41207375	R417382	NR	R4113123[53]	R4110409	R4578267	R4578267
N/A	1-1/16 "	R417379	R41207381	R417382	NR	R4113182[311]	R4110409	R4578267	R4578267
N/A	1-1/16 "	R417379	R41207375	R417382	NR	R4113182[311]	R4110409	R4578267	R4578267
N/A	1-1/16 "	R417379	R41207381	R417382	NR	R4113123[53]	R4110409	R4578267	R4578267
N/A	1-1/16 "	R417363	R417365[329]	R417382	NR	R4113123[53]	R4110409	R4578267	R4578267
N/A	1-1/16 "	R41207364	R41207366[330]	R417382	NR	R4113182[311]	R4110409	R4578267	R4578267
N/A		-	-	N/A	NR	-	-	N/A	N/A
N/A	1 "	-	-	N/A	NR	-	-	N/A	N/A
N/A	1 "	-	-	N/A	NR	-	-	N/A	N/A
N/A	1-1/16 "	R417379	R41207375	R417382	NR	-	-	N/A	N/A
N/A	1-1/16 "	R417372	R41207374[330]	R417382	NR	-	-	N/A	N/A
N/A	1-1/16 "	R417379	R41207381	R417382	NR	-	-	N/A	N/A
N/A	1-1/16 "	R417372	R41207375[329]	R417382	NR	-	-	N/A	N/A
N/A		R417363	R417365[329]	R417382	NR	N/A[336]	N/A	R4578267	R4578267
N/A		R41207364	R41207366[330]	R417382	NR	N/A[336]	N/A	R4578267	R4578267

MAKE MODEL YEAR AXLE CODE AXLE WEIGHT	AXLE & BRK. TYPE	BRK. MFG.	BRAKE SIZE	FMSI	MERITOR DISC PAD OR BRAKE SHOE	MERITOR GUIDE PIN OR RETURN SPRING KIT	MERITOR CALIPER HWD. KIT OR RETURN SPRING KIT	MERITOR ADJUSTER KIT (LEFT WHEEL)	MERITOR ADJUSTER KIT (RIGHT WHEEL)
GMC / CHEV(Cont.)									
40, 4000 SERIES-20,000 lb. GVW(Cont.)									
1991					R46735721[342]	R41207361	R40H9238	NR	NR
					R46735721[342]	R41207361	R40H9238	NR	NR
					R46735721[342]	R41207361	R40H9238	NR	NR
					R46735721[342]	R41207361	R40H9238	NR	NR
					R46735721[342]	R41207361	R40H9238	NR	NR
					R46735721[342]	R41207361	R40H9238	NR	NR
	Fd			7425 - D546	MD675	N/A	N/A	NR	NR
	Fd			7425 - D546	MD675	N/A	N/A	NR	NR
	Fd			7425 - D546	MD675	N/A	N/A	NR	NR
	Fd			7425 - D546	MD675	N/A	N/A	NR	NR
	Fm		320mm x 75mm	1417 - S726	R46735721[342]	R41207361	R40H9238	NR	NR
	Fm		320mm x 75mm	1417 - S726	R46735721[342]	R41207361	R40H9238	NR	NR
	Fm		320mm x 75mm	1417 - S726	R46735721[342]	R41207361	R40H9238	NR	NR
	Fm		320mm x 75mm	1417 - S726	R46735721[342]	R41207361	R40H9238	NR	NR
	Fm		320mm x 75mm	1417 - S726	R46735721[342]	R41207361	R40H9238	NR	NR
	Fm		320mm x 75mm	1417 - S726	R46735721[342]	R41207361	R40H9238	NR	NR
	Fm		320mm x 75mm	1417 - S726	R46735721[342]	R41207361	R40H9238	NR	NR
	Fm		320mm x 75mm	1417 - S726	R46735721[342]	R41207361	R40H9238	NR	NR
	Ra		11-13/16"x2-61/64"	1454 - S668	N/A	N/A	N/A	N/A	N/A
	Rm		320mm x 100mm	1482 - S699	R46699	N/A	N/A	N/A	N/A
	Rm		320mm x 100mm	1482 - S699	R46699	N/A	N/A	N/A	N/A
	Rm		320mm x 75mm	1417 - S726	R46735721[342]	R41207361	R40H9238	NR	NR
	Rm		320mm x 75mm	1417 - S726	R46735721[342]	R41207361	R40H9238	NR	NR
	Rm		320mm x 75mm	1417 - S726	R46735721[342]	R41207361	R40H9238	NR	NR
	Rm		320mm x 75mm	1417 - S726	R46735721[342]	R41207361	R40H9238	NR	NR
1990					R46735721[342]	R41207361	R40H9238	NR	NR
					R46735721[342]	R41207361	R40H9238	NR	NR
					R46735721[342]	R41207361	R40H9238	NR	NR
					R46735721[342]	R41207361	R40H9238	NR	NR
					R46735721[342]	R41207361	R40H9238	NR	NR
					R46735721[342]	R41207361	R40H9238	NR	NR
					R46735721[342]	R41207361	R40H9238	NR	NR
					R46735721[342]	R41207361	R40H9238	NR	NR
	Fd			7425 - D546	MD675	N/A	N/A	NR	NR
	Fd			7425 - D546	MD675	N/A	N/A	NR	NR
	Fd			7425 - D546	MD675	N/A	N/A	NR	NR
	Fd			7425 - D546	MD675	N/A	N/A	NR	NR
	Fm		320mm x 75mm	1417 - S726	R46735721[342]	R41207361	R40H9238	NR	NR
	Fm		320mm x 75mm	1417 - S726	R46735721[342]	R41207361	R40H9238	NR	NR
	Fm		320mm x 75mm	1417 - S726	R46735721[342]	R41207361	R40H9238	NR	NR
	Fm		320mm x 75mm	1417 - S726	R46735721[342]	R41207361	R40H9238	NR	NR
	Fm		320mm x 75mm	1417 - S726	R46735721[342]	R41207361	R40H9238	NR	NR
	Fm		320mm x 75mm	1417 - S726	R46735721[342]	R41207361	R40H9238	NR	NR
	Fm		320mm x 75mm	1417 - S726	R46735721[342]	R41207361	R40H9238	NR	NR
	Fm		320mm x 75mm	1417 - S726	R46735721[342]	R41207361	R40H9238	NR	NR
	Ra		11-13/16"x2-61/64"	1454 - S668	N/A	N/A	N/A	N/A	N/A
	Rm		320mm x 100mm	1482 - S699	R46699	N/A	N/A	N/A	N/A
	Rm		320mm x 100mm	1482 - S699	R46699	N/A	N/A	N/A	N/A
	Rm		320mm x 75mm	1417 - S726	R46735721[342]	R41207361	R40H9238	NR	NR
	Rm		320mm x 75mm	1417 - S726	R46735721[342]	R41207361	R40H9238	NR	NR
	Rm		320mm x 75mm	1417 - S726	R46735721[342]	R41207361	R40H9238	NR	NR
	Rm		320mm x 75mm	1417 - S726	R46735721[342]	R41207361	R40H9238	NR	NR
1989					R46735721[342]	R41207361	R40H9238	NR	NR
					R46735721[342]	R41207361	R40H9238	NR	NR
					R46735721[342]	R41207361	R40H9238	NR	NR
					R46735721[342]	R41207361	R40H9238	NR	NR
					R46735721[342]	R41207361	R40H9238	NR	NR
					R46735721[342]	R41207361	R40H9238	NR	NR
					R46735721[342]	R41207361	R40H9238	NR	NR
					R46735721[342]	R41207361	R40H9238	NR	NR

53 - Power Brakes
329 - Forward
342 - Use E-7358 for Lining and Rivet Set
54 - Manual Brakes
330 - Rearward
405 - Rotor Only
311 - Power Brakes, Stripped Chassis, Front Disc Brakes
336 - Manual Brakes, Stripped Chassis, Front Disc Brakes

MERITOR DRUM OR ROTOR NO.	CALIPER OR CYLINDER BORE SIZE	MERITOR CALIPER OR WHEEL CYLINDER (LEFT)	MERITOR CALIPER OR WHEEL CYLINDER (RIGHT)	MERITOR CALIPER OR WHEEL CYLINDER REPAIR KIT	MERITOR CALIPER PISTON	MERITOR MASTER CYLINDER	MERITOR MASTER CYLINDER KIT	MERITOR BRAKE HOSE (LEFT)	MERITOR BRAKE HOSE (RIGHT)
									GMC / CHEV(Cont.)
									40, 4000 SERIES-20,000 lb. GVW(Cont.)
N/A		R417379	R41207381	R417382	NR	N/A[336]	N/A	R4578267	R4578267
N/A		R417379	R41207381	R417382	NR	N/A[54]	N/A	R4578267	R4578267
N/A		R41207364	R41207366[330]	R417382	NR	N/A[54]	N/A	R4578267	R4578267
N/A		R417379	R41207375	R417382	NR	N/A[336]	N/A	R4578267	R4578267
N/A		R417363	R417365[329]	R417382	NR	N/A[54]	N/A	R4578267	R4578267
N/A		R417379	R41207375	R417382	NR	N/A[54]	N/A	R4578267	R4578267
R44141730[405]		-	-	R4066306	R4090126S	N/A[336]	N/A	R4578267	R4578267
R44141730[405]		-	-	R4066306	R4090126S	R4113123[53]	R4110409	R4578267	R4578267
R44141730[405]		-	-	R4066306	R4090126S	R4113182[311]	R4110409	R4578267	R4578267
R44141730[405]		-	-	R4066306	R4090126S	N/A[54]	N/A	R4578267	R4578267
N/A	1-1/16 "	R417379	R41207375	R417382	NR	R4113182[311]	R4110409	R4578267	R4578267
N/A	1-1/16 "	R41207364	R41207366[330]	R417382	NR	R4113123[53]	R4110409	R4578267	R4578267
N/A	1-1/16 "	R417363	R417365[329]	R417382	NR	R4113123[53]	R4110409	R4578267	R4578267
N/A	1-1/16 "	R417379	R41207375	R417382	NR	R4113123[53]	R4110409	R4578267	R4578267
N/A	1-1/16 "	R417379	R41207381	R417382	NR	R4113182[311]	R4110409	R4578267	R4578267
N/A	1-1/16 "	R417363	R417365[329]	R417382	NR	R4113182[311]	R4110409	R4578267	R4578267
N/A	1-1/16 "	R41207364	R41207366[330]	R417382	NR	R4113182[311]	R4110409	R4578267	R4578267
N/A	1-1/16 "	R417379	R41207381	R417382	NR	R4113123[53]	R4110409	R4578267	R4578267
N/A		-	-	N/A	NR	-	-	N/A	N/A
N/A	1 "	-	-	N/A	NR	-	-	N/A	N/A
N/A	1 "	-	-	N/A	NR	-	-	N/A	N/A
N/A	1-1/16 "	R417379	R41207381	R417382	NR	-	-	N/A	N/A
N/A	1-1/16 "	R417379	R41207375	R417382	NR	-	-	N/A	N/A
N/A	1-1/16 "	R417372	R41207375[329]	R417382	NR	-	-	N/A	N/A
N/A	1-1/16 "	R417372	R41207374[330]	R417382	NR	-	-	N/A	N/A
N/A		R417363	R417365[329]	R417382	NR	N/A[54]	N/A	R4578267	R4578267
N/A		R417379	R41207381	R417382	NR	N/A[54]	N/A	R4578267	R4578267
N/A		R417379	R41207375	R417382	NR	N/A[336]	N/A	R4578267	R4578267
N/A		R41207364	R41207366[330]	R417382	NR	N/A[54]	N/A	R4578267	R4578267
N/A		R417363	R417365[329]	R417382	NR	N/A[336]	N/A	R4578267	R4578267
N/A		R417379	R41207375	R417382	NR	N/A[54]	N/A	R4578267	R4578267
N/A		R417379	R41207381	R417382	NR	N/A[336]	N/A	R4578267	R4578267
N/A		R41207364	R41207366[330]	R417382	NR	N/A[336]	N/A	R4578267	R4578267
R44141730[405]		-	-	R4066306	R4090126S	R4113182[311]	R4110409	R4578267	R4578267
R44141730[405]		-	-	R4066306	R4090126S	N/A[54]	N/A	R4578267	R4578267
R44141730[405]		-	-	R4066306	R4090126S	R4113123[53]	R4110409	R4578267	R4578267
R44141730[405]		-	-	R4066306	R4090126S	N/A[336]	N/A	R4578267	R4578267
N/A	1-1/16 "	R417379	R41207381	R417382	NR	R4113182[311]	R4110409	R4578267	R4578267
N/A	1-1/16 "	R417363	R417365[329]	R417382	NR	R4113182[311]	R4110409	R4578267	R4578267
N/A	1-1/16 "	R41207364	R41207366[330]	R417382	NR	R4113182[311]	R4110409	R4578267	R4578267
N/A	1-1/16 "	R417379	R41207381	R417382	NR	R4113123[53]	R4110409	R4578267	R4578267
N/A	1-1/16 "	R417379	R41207375	R417382	NR	R4113123[53]	R4110409	R4578267	R4578267
N/A	1-1/16 "	R41207364	R41207366[330]	R417382	NR	R4113123[53]	R4110409	R4578267	R4578267
N/A	1-1/16 "	R417379	R41207375	R417382	NR	R4113182[311]	R4110409	R4578267	R4578267
N/A	1-1/16 "	R417363	R417365[329]	R417382	NR	R4113123[53]	R4110409	R4578267	R4578267
N/A		-	-	N/A	NR	-	-	N/A	N/A
N/A	1 "	-	-	N/A	NR	-	-	N/A	N/A
N/A	1 "	-	-	N/A	NR	-	-	N/A	N/A
N/A	1-1/16 "	R417379	R41207375	R417382	NR	-	-	N/A	N/A
N/A	1-1/16 "	R417379	R41207381	R417382	NR	-	-	N/A	N/A
N/A	1-1/16 "	R417372	R41207375[329]	R417382	NR	-	-	N/A	N/A
N/A	1-1/16 "	R417372	R41207374[330]	R417382	NR	-	-	N/A	N/A
N/A		R417363	R417365[329]	R417382	NR	N/A[336]	N/A	R4578267	R4578267
N/A		R41207364	R41207366[330]	R417382	NR	N/A[336]	N/A	R4578267	R4578267
N/A		R417379	R41207381	R417382	NR	N/A[54]	N/A	R4578267	R4578267
N/A		R417363	R417365[329]	R417382	NR	N/A[54]	N/A	R4578267	R4578267
N/A		R417379	R41207375	R417382	NR	N/A[54]	N/A	R4578267	R4578267
N/A		R417379	R41207381	R417382	NR	N/A[336]	N/A	R4578267	R4578267
N/A		R41207364	R41207366[330]	R417382	NR	N/A[54]	N/A	R4578267	R4578267
N/A		R417379	R41207375	R417382	NR	N/A[336]	N/A	R4578267	R4578267

MAKE MODEL YEAR AXLE CODE AXLE WEIGHT	AXLE & BRK. TYPE	BRK. MFG.	BRAKE SIZE	FMSI	MERITOR DISC PAD OR BRAKE SHOE	MERITOR GUIDE PIN OR RETURN SPRING KIT	MERITOR CALIPER HWD. KIT OR RETURN SPRING KIT	MERITOR ADJUSTER KIT (LEFT WHEEL)	MERITOR ADJUSTER KIT (RIGHT WHEEL)
GMC / CHEV(Cont.)									
40, 4000 SERIES-20,000 lb. GVW(Cont.)									
1989									
	Fd			7425 - D546	MD675	N/A	N/A	NR	NR
	Fd			7425 - D546	MD675	N/A	N/A	NR	NR
	Fd			7425 - D546	MD675	N/A	N/A	NR	NR
	Fd			7425 - D546	MD675	N/A	N/A	NR	NR
	Fm		320mm x 75mm	1417 - S726	R46735721[342]	R41207361	R40H9238	NR	NR
	Fm		320mm x 75mm	1417 - S726	R46735721[342]	R41207361	R40H9238	NR	NR
	Fm		320mm x 75mm	1417 - S726	R46735721[342]	R41207361	R40H9238	NR	NR
	Fm		320mm x 75mm	1417 - S726	R46735721[342]	R41207361	R40H9238	NR	NR
	Fm		320mm x 75mm	1417 - S726	R46735721[342]	R41207361	R40H9238	NR	NR
	Fm		320mm x 75mm	1417 - S726	R46735721[342]	R41207361	R40H9238	NR	NR
	Fm		320mm x 75mm	1417 - S726	R46735721[342]	R41207361	R40H9238	NR	NR
	Fm		320mm x 75mm	1417 - S726	R46735721[342]	R41207361	R40H9238	NR	NR
	Ra		11-13/16"x2-61/64"	1454 - S668	N/A	N/A	N/A	N/A	N/A
	Rm		320mm x 100mm	1482 - S699	R46699	N/A	N/A	N/A	N/A
	Rm		320mm x 100mm	1482 - S699	R46699	N/A	N/A	N/A	N/A
	Rm		320mm x 75mm	1417 - S726	R46735721[342]	R41207361	R40H9238	NR	NR
	Rm		320mm x 75mm	1417 - S726	R46735721[342]	R41207361	R40H9238	NR	NR
	Rm		320mm x 75mm	1417 - S726	R46735721[342]	R41207361	R40H9238	NR	NR
	Rm		320mm x 75mm	1417 - S726	R46735721[342]	R41207361	R40H9238	NR	NR
1988									
					R46735721[342]	R41207361	R40H9238	NR	NR
					R46735721[342]	R41207361	R40H9238	NR	NR
					R46735721[342]	R41207361	R40H9238	NR	NR
					R46735721[342]	R41207361	R40H9238	NR	NR
					R46735721[342]	R41207361	R40H9238	NR	NR
					R46735721[342]	R41207361	R40H9238	NR	NR
					R46735721[342]	R41207361	R40H9238	NR	NR
					R46735721[342]	R41207361	R40H9238	NR	NR
	Fd			7425 - D546	MD675	N/A	N/A	NR	NR
	Fd			7425 - D546	MD675	N/A	N/A	NR	NR
	Fd			7425 - D546	MD675	N/A	N/A	NR	NR
	Fd			7425 - D546	MD675	N/A	N/A	NR	NR
	Fm		320mm x 75mm	1417 - S726	R46735721[342]	R41207361	R40H9238	NR	NR
	Fm		320mm x 75mm	1417 - S726	R46735721[342]	R41207361	R40H9238	NR	NR
	Fm		320mm x 75mm	1417 - S726	R46735721[342]	R41207361	R40H9238	NR	NR
	Fm		320mm x 75mm	1417 - S726	R46735721[342]	R41207361	R40H9238	NR	NR
	Fm		320mm x 75mm	1417 - S726	R46735721[342]	R41207361	R40H9238	NR	NR
	Fm		320mm x 75mm	1417 - S726	R46735721[342]	R41207361	R40H9238	NR	NR
	Fm		320mm x 75mm	1417 - S726	R46735721[342]	R41207361	R40H9238	NR	NR
	Fm		320mm x 75mm	1417 - S726	R46735721[342]	R41207361	R40H9238	NR	NR
	Ra		11-13/16"x2-61/64"	1454 - S668	N/A	N/A	N/A	N/A	N/A
	Rm		320mm x 100mm	1482 - S699	R46699	N/A	N/A	N/A	N/A
	Rm		320mm x 100mm	1482 - S699	R46699	N/A	N/A	N/A	N/A
	Rm		320mm x 75mm	1417 - S726	R46735721[342]	R41207361	R40H9238	NR	NR
	Rm		320mm x 75mm	1417 - S726	R46735721[342]	R41207361	R40H9238	NR	NR
	Rm		320mm x 75mm	1417 - S726	R46735721[342]	R41207361	R40H9238	NR	NR
	Rm		320mm x 75mm	1417 - S726	R46735721[342]	R41207361	R40H9238	NR	NR
1987									
					R46735721[342]	R41207361	R40H9238	NR	NR
					R46735721[342]	R41207361	R40H9238	NR	NR
					R46735721[342]	R41207361	R40H9238	NR	NR
					R46735721[342]	R41207361	R40H9238	NR	NR
					R46735721[342]	R41207361	R40H9238	NR	NR
					R46735721[342]	R41207361	R40H9238	NR	NR
					R46735721[342]	R41207361	R40H9238	NR	NR
					R46735721[342]	R41207361	R40H9238	NR	NR
	Fd			7425 - D546	MD675	N/A	N/A	NR	NR
	Fd			7425 - D546	MD675	N/A	N/A	NR	NR
	Fd			7425 - D546	MD675	N/A	N/A	NR	NR
	Fd			7425 - D546	MD675	N/A	N/A	NR	NR
	Fm		320mm x 75mm	1417 - S726	R46735721[342]	R41207361	R40H9238	NR	NR
	Fm		320mm x 75mm	1417 - S726	R46735721[342]	R41207361	R40H9238	NR	NR

53 - Power Brakes
54 - Manual Brakes
311 - Power Brakes, Stripped Chassis, Front Disc Brakes
329 - Forward
330 - Rearward
336 - Manual Brakes, Stripped Chassis, Front Disc Brakes
342 - Use E-7358 for Lining and Rivet Set
405 - Rotor Only

MERITOR DRUM OR ROTOR NO.	CALIPER OR CYLINDER BORE SIZE	MERITOR CALIPER OR WHEEL CYLINDER (LEFT)	MERITOR CALIPER OR WHEEL CYLINDER (RIGHT)	MERITOR CALIPER OR WHEEL CYLINDER REPAIR KIT	MERITOR CALIPER PISTON	MERITOR MASTER CYLINDER	MERITOR MASTER CYLINDER KIT	MERITOR BRAKE HOSE (LEFT)	MERITOR BRAKE HOSE (RIGHT)
GMC / CHEV(Cont.)									
40, 4000 SERIES-20,000 lb. GVW(Cont.)									
R44141730[405]		-	-	R4066306	R4090126S	R4113123[53]	R4110409	R4578267	R4578267
R44141730[405]		-	-	R4066306	R4090126S	N/A[336]	N/A	R4578267	R4578267
R44141730[405]		-	-	R4066306	R4090126S	R4113182[311]	R4110409	R4578267	R4578267
R44141730[405]		-	-	R4066306	R4090126S	N/A[54]	N/A	R4578267	R4578267
N/A	1-1/16 "	R417363	R417365[329]	R417382	NR	R4113123[53]	R4110409	R4578267	R4578267
N/A	1-1/16 "	R41207364	R41207366[330]	R417382	NR	R4113123[53]	R4110409	R4578267	R4578267
N/A	1-1/16 "	R417379	R41207375	R417382	NR	R4113123[53]	R4110409	R4578267	R4578267
N/A	1-1/16 "	R417379	R41207381	R417382	NR	R4113182[311]	R4110409	R4578267	R4578267
N/A	1-1/16 "	R417379	R41207375	R417382	NR	R4113182[311]	R4110409	R4578267	R4578267
N/A	1-1/16 "	R417363	R417365[329]	R417382	NR	R4113182[311]	R4110409	R4578267	R4578267
N/A	1-1/16 "	R417379	R41207381	R417382	NR	R4113123[53]	R4110409	R4578267	R4578267
N/A	1-1/16 "	R41207364	R41207366[330]	R417382	NR	R4113182[311]	R4110409	R4578267	R4578267
N/A		-	-	N/A	NR	-	-	N/A	N/A
N/A	1 "	-	-	N/A	NR	-	-	N/A	N/A
N/A	1 "	-	-	N/A	NR	-	-	N/A	N/A
N/A	1-1/16 "	R417379	R41207375	R417382	NR	-	-	N/A	N/A
N/A	1-1/16 "	R417379	R41207381	R417382	NR	-	-	N/A	N/A
N/A	1-1/16 "	R417372	R41207375[329]	R417382	NR	-	-	N/A	N/A
N/A	1-1/16 "	R417372	R41207374[330]	R417382	NR	-	-	N/A	N/A
N/A		R41207364	R41207366[330]	R417382	NR	N/A[54]	N/A	R4578267	R4578267
N/A		R41207364	R41207366[330]	R417382	NR	N/A[336]	N/A	R4578267	R4578267
N/A		R417363	R417365[329]	R417382	NR	N/A[54]	N/A	R4578267	R4578267
N/A		R417379	R41207381	R417382	NR	N/A[336]	N/A	R4578267	R4578267
N/A		R417363	R417365[329]	R417382	NR	N/A[336]	N/A	R4578267	R4578267
N/A		R417379	R41207375	R417382	NR	N/A[336]	N/A	R4578267	R4578267
N/A		R417379	R41207375	R417382	NR	N/A[54]	N/A	R4578267	R4578267
N/A		R417379	R41207381	R417382	NR	N/A[54]	N/A	R4578267	R4578267
R44141730[405]		-	-	R4066306	R4090126S	R4113182[311]	R4110409	R4578267	R4578267
R44141730[405]		-	-	R4066306	R4090126S	R4113123[53]	R4110409	R4578267	R4578267
R44141730[405]		-	-	R4066306	R4090126S	N/A[54]	N/A	R4578267	R4578267
R44141730[405]		-	-	R4066306	R4090126S	N/A[336]	N/A	R4578267	R4578267
N/A	1-1/16 "	R417379	R41207375	R417382	NR	R4113182[311]	R4110409	R4578267	R4578267
N/A	1-1/16 "	R417363	R417365[329]	R417382	NR	R4113182[311]	R4110409	R4578267	R4578267
N/A	1-1/16 "	R417379	R41207381	R417382	NR	R4113123[53]	R4110409	R4578267	R4578267
N/A	1-1/16 "	R417379	R41207375	R417382	NR	R4113123[53]	R4110409	R4578267	R4578267
N/A	1-1/16 "	R417379	R41207381	R417382	NR	R4113182[311]	R4110409	R4578267	R4578267
N/A	1-1/16 "	R41207364	R41207366[330]	R417382	NR	R4113182[311]	R4110409	R4578267	R4578267
N/A	1-1/16 "	R41207364	R41207366[330]	R417382	NR	R4113123[53]	R4110409	R4578267	R4578267
N/A	1-1/16 "	R417363	R417365[329]	R417382	NR	R4113123[53]	R4110409	R4578267	R4578267
N/A		-	-	N/A	NR	-	-	N/A	N/A
N/A	1 "	-	-	N/A	NR	-	-	N/A	N/A
N/A	1 "	-	-	N/A	NR	-	-	N/A	N/A
N/A	1-1/16 "	R417379	R41207375	R417382	NR	-	-	N/A	N/A
N/A	1-1/16 "	R417372	R41207374[330]	R417382	NR	-	-	N/A	N/A
N/A	1-1/16 "	R417379	R41207381	R417382	NR	-	-	N/A	N/A
N/A	1-1/16 "	R417372	R41207375[329]	R417382	NR	-	-	N/A	N/A
N/A		R417363	R417365[329]	R417382	NR	N/A[336]	N/A	R4578267	R4578267
N/A		R41207364	R41207366[330]	R417382	NR	N/A[336]	N/A	R4578267	R4578267
N/A		R41207364	R41207366[330]	R417382	NR	N/A[54]	N/A	R4578267	R4578267
N/A		R417363	R417365[329]	R417382	NR	N/A[54]	N/A	R4578267	R4578267
N/A		R417379	R41207375	R417382	NR	N/A[336]	N/A	R4578267	R4578267
N/A		R417379	R41207381	R417382	NR	N/A[54]	N/A	R4578267	R4578267
N/A		R417379	R41207375	R417382	NR	N/A[54]	N/A	R4578267	R4578267
N/A		R417379	R41207381	R417382	NR	N/A[336]	N/A	R4578267	R4578267
R44141730[405]		-	-	R4066306	R4090126S	N/A[336]	N/A	R4578267	R4578267
R44141730[405]		-	-	R4066306	R4090126S	R4113123[53]	R4110409	R4578267	R4578267
R44141730[405]		-	-	R4066306	R4090126S	N/A[54]	N/A	R4578267	R4578267
R44141730[405]		-	-	R4066306	R4090126S	R4113182[311]	R4110409	R4578267	R4578267
N/A	1-1/16 "	R417363	R417365[329]	R417382	NR	R4113182[311]	R4110409	R4578267	R4578267
N/A	1-1/16 "	R417379	R41207375	R417382	NR	R4113182[311]	R4110409	R4578267	R4578267

MAKE MODEL YEAR AXLE CODE AXLE WEIGHT	AXLE & BRK. TYPE	BRK. MFG.	BRAKE SIZE	FMSI	MERITOR DISC PAD OR BRAKE SHOE	MERITOR GUIDE PIN OR RETURN SPRING KIT	MERITOR CALIPER HWD. KIT OR RETURN SPRING KIT	MERITOR ADJUSTER KIT (LEFT WHEEL)	MERITOR ADJUSTER KIT (RIGHT WHEEL)
GMC / CHEV(Cont.)									
40, 4000 SERIES-20,000 lb. GVW(Cont.)									
1987									
	Fm		320mm x 75mm	1417 - S726	R46735721[342]	R41207361	R40H9238	NR	NR
	Fm		320mm x 75mm	1417 - S726	R46735721[342]	R41207361	R40H9238	NR	NR
	Fm		320mm x 75mm	1417 - S726	R46735721[342]	R41207361	R40H9238	NR	NR
	Fm		320mm x 75mm	1417 - S726	R46735721[342]	R41207361	R40H9238	NR	NR
	Fm		320mm x 75mm	1417 - S726	R46735721[342]	R41207361	R40H9238	NR	NR
	Fm		320mm x 75mm	1417 - S726	R46735721[342]	R41207361	R40H9238	NR	NR
	Ra		11-13/16"x2-61/64"	1454 - S668	N/A	N/A	N/A	N/A	N/A
	Rm		320mm x 100mm	1482 - S699	R46699	N/A	N/A	N/A	N/A
	Rm		320mm x 100mm	1482 - S699	R46699	N/A	N/A	N/A	N/A
	Rm		320mm x 75mm	1417 - S726	R46735721[342]	R41207361	R40H9238	NR	NR
	Rm		320mm x 75mm	1417 - S726	R46735721[342]	R41207361	R40H9238	NR	NR
	Rm		320mm x 75mm	1417 - S726	R46735721[342]	R41207361	R40H9238	NR	NR
	Rm		320mm x 75mm	1417 - S726	R46735721[342]	R41207361	R40H9238	NR	NR
1986									
	Fm		320mm x 75mm	1417 - S726	R46735721[342]	R41207361	R40H9238	NR	NR
	Fm		320mm x 75mm	1417 - S726	R46735721[342]	R41207361	R40H9238	NR	NR
	Rm		320mm x 75mm	1417 - S726	R46735721[342]	R41207361	R40H9238	NR	NR
	Rm		320mm x 75mm	1417 - S726	R46735721[342]	R41207361	R40H9238	NR	NR
1985									
	Fm		320mm x 75mm	1417 - S726	R46735721[342]	R41207361	R40H9238	NR	NR
	Fm		320mm x 75mm	1417 - S726	R46735721[342]	R41207361	R40H9238	NR	NR
	Rm		320mm x 75mm	1417 - S726	R46735721[342]	R41207361	R40H9238	NR	NR
	Rm		320mm x 75mm	1417 - S726	R46735721[342]	R41207361	R40H9238	NR	NR
1984									
P4T042	Fa	GM	14 " x 2-1/2 "	2039 - 299	N/A	R40H599	R40H9206	R40H3500	R40H3501
	Ra	GM	15 " x 4 "	4640 - 427	R700427	R40H550	R404121	R40H3510	R40H3511
	Ra	GM	15 " x 4 "	4640 - 427	R700427	R40H550	R404121	R40H3510	R40H3511
	Ra	GM	15 " x 5 "	4639 - 442	R700442	R40H550	R404121	R40H3510	R40H3511
	Ra	GM	15 " x 5 "	4639 - 442	R700442	R40H550	R404121	R40H3510	R40H3511
	Ra	WG	15 " x 6 "	4596 - 381	R700381	R40H597	R40H9200	R40H3540	R40H3541
	Ra	WG	15 " x 6 "	4596 - 381	R700381	R40H597	R40H9200	R40H3540	R40H3541
W4S042	Fm		320mm x 75mm	1417 - S726	R46735721[342]	R41207361	R40H9238	NR	NR
	Fm		320mm x 75mm	1417 - S726	R46735721[342]	R41207361	R40H9238	NR	NR
	Rm		320mm x 75mm	1417 - S726	R46735721[342]	R41207361	R40H9238	NR	NR
	Rm		320mm x 75mm	1417 - S726	R46735721[342]	R41207361	R40H9238	NR	NR
1983									
P4T042	Fa	GM	14 " x 2-1/2 "	2039 - 299	N/A	R40H599	R40H9206	R40H3500	R40H3501
	Ra	GM	15 " x 4 "	4640 - 427	R700427	R40H550	R404121	R40H3510	R40H3511
	Ra	GM	15 " x 4 "	4640 - 427	R700427	R40H550	R404121	R40H3510	R40H3511
	Ra	GM	15 " x 5 "	4639 - 442	R700442	R40H550	R404121	R40H3510	R40H3511
	Ra	GM	15 " x 5 "	4639 - 442	R700442	R40H550	R404121	R40H3510	R40H3511
	Ra	WG	15 " x 6 "	4596 - 381	R700381	R40H597	R40H9200	R40H3540	R40H3541
	Ra	WG	15 " x 6 "	4596 - 381	R700381	R40H597	R40H9200	R40H3540	R40H3541
1982									
	Fa	GM	14 " x 2-1/2 "	2039 - 299	N/A	R40H599	R40H9206	R40H3500	R40H3501
	Ra	GM	15 " x 4 "	4640 - 427	R700427	R40H550	R404121	R40H3510	R40H3511
	Ra	GM	15 " x 4 "	4640 - 427	R700427	R40H550	R404121	R40H3510	R40H3511
	Ra	GM	15 " x 5 "	4639 - 442	R700442	R40H550	R404121	R40H3510	R40H3511
	Ra	GM	15 " x 5 "	4639 - 442	R700442	R40H550	R404121	R40H3510	R40H3511
	Ra	WG	15 " x 6 "	4596 - 381	R700381	R40H597	R40H9200	R40H3540	R40H3541
	Ra	WG	15 " x 6 "	4596 - 381	R700381	R40H597	R40H9200	R40H3540	R40H3541
1981									
	Fa	GM	14 " x 2-1/2 "	2039 - 299	N/A	R40H599	R40H9206	R40H3500	R40H3501
	Ra	GM	15 " x 4 "	4640 - 427	R700427	R40H550	R404121	R40H3510	R40H3511
	Ra	GM	15 " x 4 "	4640 - 427	R700427	R40H550	R404121	R40H3510	R40H3511
	Ra	GM	15 " x 5 "	4639 - 442	R700442	R40H550	R404121	R40H3510	R40H3511
	Ra	GM	15 " x 5 "	4639 - 442	R700442	R40H550	R404121	R40H3510	R40H3511
	Ra	WG	15 " x 6 "	4596 - 381	R700381	R40H597	R40H9200	R40H3540	R40H3541
	Ra	WG	15 " x 6 "	4596 - 381	R700381	R40H597	R40H9200	R40H3540	R40H3541
1980									
	Fa	GM	14 " x 2-1/2 "	2039 - 299	N/A	R40H599	R40H9206	R40H3500	R40H3501
	Ra	GM	15 " x 4 "	4640 - 427	R700427	R40H550	R404121	R40H3510	R40H3511
	Ra	GM	15 " x 4 "	4640 - 427	R700427	R40H550	R404121	R40H3510	R40H3511

53 - Power Brakes
329 - Forward
284 - 5 Hole Drum
330 - Rearward
311 - Power Brakes, Stripped Chassis, Front Disc Brakes
342 - Use E-7358 for Lining and Rivet Set

MERITOR DRUM OR ROTOR NO.	CALIPER OR CYLINDER BORE SIZE	MERITOR CALIPER OR WHEEL CYLINDER (LEFT)	MERITOR CALIPER OR WHEEL CYLINDER (RIGHT)	MERITOR CALIPER OR WHEEL CYLINDER REPAIR KIT	MERITOR CALIPER PISTON	MERITOR MASTER CYLINDER	MERITOR MASTER CYLINDER KIT	MERITOR BRAKE HOSE (LEFT)	MERITOR BRAKE HOSE (RIGHT)
GMC / CHEV(Cont.)									
40, 4000 SERIES-20,000 lb. GVW(Cont.)									
N/A	1-1/16 "	R417379	R41207381	R417382	NR	R4113123[53]	R4110409	R4578267	R4578267
N/A	1-1/16 "	R41207364	R41207366[330]	R417382	NR	R4113123[53]	R4110409	R4578267	R4578267
N/A	1-1/16 "	R417379	R41207381	R417382	NR	R4113182[311]	R4110409	R4578267	R4578267
N/A	1-1/16 "	R417379	R41207375	R417382	NR	R4113123[53]	R4110409	R4578267	R4578267
N/A	1-1/16 "	R417363	R417365[329]	R417382	NR	R4113123[53]	R4110409	R4578267	R4578267
N/A	1-1/16 "	R41207364	R41207366[330]	R417382	NR	R4113182[311]	R4110409	R4578267	R4578267
N/A		-	-	N/A	NR	-	-	N/A	N/A
N/A	1 "	-	-	N/A	NR	-	-	N/A	N/A
N/A	1 "	-	-	N/A	NR	-	-	N/A	N/A
N/A	1-1/16 "	R417379	R41207381	R417382	NR	-	-	N/A	N/A
N/A	1-1/16 "	R417372	R41207374[330]	R417382	NR	-	-	N/A	N/A
N/A	1-1/16 "	R417372	R41207375[329]	R417382	NR	-	-	N/A	N/A
N/A	1-1/16 "	R417379	R41207375	R417382	NR	-	-	N/A	N/A
N/A[284]	1-3/16 "	R417367	R417369	R417383	NR	-	-	-	-
N/A[284]	1-3/16 "	R417368	R417370	R417383	NR	-	-	-	-
N/A[284]	1-3/16 "	R417376	R417377[329]	R417383	NR	-	-	-	-
N/A[284]	1-3/16 "	R417376	R417377[330]	R417383	NR	-	-	-	-
N/A[284]	1-3/16 "	R417368	R417370	R417383	NR	-	-	-	-
N/A[284]	1-3/16 "	R417367	R417369	R417383	NR	-	-	-	-
N/A[284]	1-3/16 "	R417376	R417377[330]	R417383	NR	-	-	-	-
N/A[284]	1-3/16 "	R417376	R417377[329]	R417383	NR	-	-	-	-
N/A	7/8 "	R4133406	R4133407	R4166820	NR	-	-	-	-
N/A	1-1/2 "	R4133655	R4133656	R415194	NR	-	-	-	-
N/A	1-1/2 "	R4133655	R4133656	R415194	NR	-	-	-	-
N/A	1-1/2 "	R4133655	R4133656	R415194	NR	-	-	-	-
N/A	1-1/2 "	R4133655	R4133656	R415194	NR	-	-	-	-
N/A	1-5/8 "	R4133338	R4133338	R4166689	NR	-	-	-	-
N/A	1-5/8 "	R4133338	R4133338	R4166689	NR	-	-	-	-
N/A[284]	1-3/16 "	R417368	R417370	R417383	NR	-	-	-	-
N/A[284]	1-3/16 "	R417367	R417369	R417383	NR	-	-	-	-
N/A[284]	1-3/16 "	R417376	R417377[330]	R417383	NR	-	-	-	-
N/A[284]	1-3/16 "	R417376	R417377[329]	R417383	NR	-	-	-	-
N/A	7/8 "	R4133406	R4133407	R4166820	NR	-	-	-	-
N/A	1-1/2 "	R4133655	R4133656	R415194	NR	-	-	-	-
N/A	1-1/2 "	R4133655	R4133656	R415194	NR	-	-	-	-
N/A	1-1/2 "	R4133655	R4133656	R415194	NR	-	-	-	-
N/A	1-1/2 "	R4133655	R4133656	R415194	NR	-	-	-	-
N/A	1-5/8 "	R4133338	R4133338	R4166689	NR	-	-	-	-
N/A	1-5/8 "	R4133338	R4133338	R4166689	NR	-	-	-	-
N/A	7/8 "	R4133406	R4133407	R4166820	NR	-	-	-	-
N/A	1-1/2 "	R4133655	R4133656	R415194	NR	-	-	-	-
N/A	1-1/2 "	R4133655	R4133656	R415194	NR	-	-	-	-
N/A	1-1/2 "	R4133655	R4133656	R415194	NR	-	-	-	-
N/A	1-1/2 "	R4133655	R4133656	R415194	NR	-	-	-	-
N/A	1-5/8 "	R4133338	R4133338	R4166689	NR	-	-	-	-
N/A	1-5/8 "	R4133338	R4133338	R4166689	NR	-	-	-	-
N/A	7/8 "	R4133406	R4133407	R4166820	NR	-	-	-	-
N/A	1-1/2 "	R4133655	R4133656	R415194	NR	-	-	-	-
N/A	1-1/2 "	R4133655	R4133656	R415194	NR	-	-	-	-
N/A	1-1/2 "	R4133655	R4133656	R415194	NR	-	-	-	-
N/A	1-1/2 "	R4133655	R4133656	R415194	NR	-	-	-	-
N/A	1-5/8 "	R4133338	R4133338	R4166689	NR	-	-	-	-
N/A	1-5/8 "	R4133338	R4133338	R4166689	NR	-	-	-	-
N/A	7/8 "	R4133406	R4133407	R4166820	NR	-	-	-	-
N/A	1-1/2 "	R4133655	R4133656	R415194	NR	-	-	-	-
N/A	1-1/2 "	R4133655	R4133656	R415194	NR	-	-	-	-

MAKE MODEL YEAR AXLE CODE AXLE WEIGHT	AXLE & BRK. TYPE	BRK. MFG.	BRAKE SIZE	FMSI	MERITOR DISC PAD OR BRAKE SHOE	MERITOR GUIDE PIN OR RETURN SPRING KIT	MERITOR CALIPER HWD. KIT OR RETURN SPRING KIT	MERITOR ADJUSTER KIT (LEFT WHEEL)	MERITOR ADJUSTER KIT (RIGHT WHEEL)
GMC / CHEV(Cont.)									
40, 4000 SERIES-20,000 lb. GVW(Cont.)									
1980									
	Ra	GM	15 " x 5 "	4639 - 442	R700442	R40H550	R404121	R40H3510	R40H3511
	Ra	GM	15 " x 5 "	4639 - 442	R700442	R40H550	R404121	R40H3510	R40H3511
	Ra	WG	15 " x 6 "	4596 - 381	R700381	R40H597	R40H9200	R40H3540	R40H3541
	Ra	WG	15 " x 6 "	4596 - 381	R700381	R40H597	R40H9200	R40H3540	R40H3541
1979									
	Fa	GM	14 " x 2-1/2 "	2039 - 299	N/A	R40H599	R40H9206	R40H3500	R40H3501
	Fa	GM	14 " x 2-1/2 "	2039 - 299	N/A	R40H599	R40H9206	R40H3500	R40H3501
	Fa	GM	14 " x 2-1/2 "	2039 - 299	N/A	R40H599	R40H9206	R40H3500	R40H3501
	Ra	GM	15 " x 4 "	4640 - 427	R700427	R40H550	R404121	R40H3510	R40H3511
	Ra	GM	15 " x 4 "	4640 - 427	R700427	R40H550	R404121	R40H3510	R40H3511
	Ra	GM	15 " x 5 "	4639 - 442	R700442	R40H550	R404121	R40H3510	R40H3511
	Ra	GM	15 " x 5 "	4639 - 442	R700442	R40H550	R404121	R40H3510	R40H3511
	Ra	WG	15 " x 6 "	4596 - 381	R700381	R40H597	R40H9200	R40H3540	R40H3541
	Ra	WG	15 " x 6 "	4596 - 381	R700381	R40H597	R40H9200	R40H3540	R40H3541
1972									
	Ra	GM	15 " x 4 "	4640 - 427	R700427	R40H550	R404121	R40H3510	R40H3511
P4T042 F050	Fa	GM	14 " x 2-1/2 "	2039 - 299	N/A	R40H599	R40H9206	R40H3500	R40H3501
P4T042 F070	Fa	GM	14 " x 2-1/2 "	2039 - 299	N/A	R40H599	R40H9206	R40H3500	R40H3501
P4T042 H110, H135	Ra	GM	15 " x 4 "	4640 - 427	R700427	R40H550	R404121	R40H3510	R40H3511
P4T042 H135, H150	Ra	GM	15 " x 5 "	4639 - 442	R700442	R40H550	R404121	R40H3510	R40H3511
1971 P4T042	Ra	GM	15 " x 4 "	4640 - 427	R700427	R40H550	R404121	R40H3510	R40H3511
P4T042 F050	Fa	GM	14 " x 2-1/2 "	2039 - 299	N/A	R40H599	R40H9206	R40H3500	R40H3501
P4T042 F070	Fa	GM	14 " x 2-1/2 "	2039 - 299	N/A	R40H599	R40H9206	R40H3500	R40H3501
P4T042 H110, H135	Ra	GM	15 " x 4 "	4640 - 427	R700427	R40H550	R404121	R40H3510	R40H3511
P4T042 H135, H150	Ra	GM	15 " x 5 "	4639 - 442	R700442	R40H550	R404121	R40H3510	R40H3511
1970 P4T042	Ra	GM	15 " x 4 "	4640 - 427	R700427	R40H550	R404121	R40H3510	R40H3511
P4T042 F050	Fa	GM	14 " x 2-1/2 "	2039 - 299	N/A	R40H599	R40H9206	R40H3500	R40H3501
P4T042 F070	Fa	GM	14 " x 2-1/2 "	2039 - 299	N/A	R40H599	R40H9206	R40H3500	R40H3501
P4T042 H110, H135	Ra	GM	15 " x 4 "	4640 - 427	R700427	R40H550	R404121	R40H3510	R40H3511
P4T042 H135, H150	Ra	GM	15 " x 5 "	4639 - 442	R700442	R40H550	R404121	R40H3510	R40H3511
1969 P4T042	Ra	GM	15 " x 4 "	4640 - 427	R700427	R40H550	R404121	R40H3510	R40H3511
P4T042 F050	Fa	GM	14 " x 2-1/2 "	2039 - 299	N/A	R40H599	R40H9206	R40H3500	R40H3501
P4T042 F070	Fa	GM	14 " x 2-1/2 "	2039 - 299	N/A	R40H599	R40H9206	R40H3500	R40H3501
P4T042 H110, H135	Ra	GM	15 " x 4 "	4640 - 427	R700427	R40H550	R404121	R40H3510	R40H3511
P4T042 H135, H150	Ra	GM	15 " x 5 "	4639 - 442	R700442	R40H550	R404121	R40H3510	R40H3511
1968 P4T042	Ra	GM	15 " x 4 "	4640 - 427	R700427	R40H550	R404121	R40H3510	R40H3511
P4T042 F050	Fa	GM	14 " x 2-1/2 "	2039 - 299	N/A	R40H599	R40H9206	R40H3500	R40H3501
P4T042 F070	Fa	GM	14 " x 2-1/2 "	2039 - 299	N/A	R40H599	R40H9206	R40H3500	R40H3501
P4T042 H110, H135	Ra	GM	15 " x 4 "	4640 - 427	R700427	R40H550	R404121	R40H3510	R40H3511
P4T042 H135, H150	Ra	GM	15 " x 5 "	4639 - 442	R700442	R40H550	R404121	R40H3510	R40H3511

MERITOR DRUM OR ROTOR NO.	CALIPER OR CYLINDER BORE SIZE	MERITOR CALIPER OR WHEEL CYLINDER (LEFT)	MERITOR CALIPER OR WHEEL CYLINDER (RIGHT)	MERITOR CALIPER OR WHEEL CYLINDER REPAIR KIT	MERITOR CALIPER PISTON	MERITOR MASTER CYLINDER	MERITOR MASTER CYLINDER KIT	MERITOR BRAKE HOSE (LEFT)	MERITOR BRAKE HOSE (RIGHT)
GMC / CHEV(Cont.)									
40, 4000 SERIES-20,000 lb. GVW(Cont.)									
N/A	1-1/2 "	R4133655	R4133656	R415194	NR	-	-	-	-
N/A	1-1/2 "	R4133655	R4133656	R415194	NR	-	-	-	-
N/A	1-5/8 "	R4133338	R4133338	R4166689	NR	-	-	-	-
N/A	1-5/8 "	R4133338	R4133338	R4166689	NR	-	-	-	-
N/A	7/8 "	R4133406	R4133407	R4166820	NR	-	-	-	-
N/A	7/8 "	R4133406	R4133407	R4166820	NR	-	-	-	-
N/A	7/8 "	R4133406	R4133407	R4166820	NR	-	-	-	-
N/A	1-1/2 "	R4133655	R4133656	R415194	NR	-	-	-	-
N/A	1-1/2 "	R4133655	R4133656	R415194	NR	-	-	-	-
N/A	1-1/2 "	R4133655	R4133656	R415194	NR	-	-	-	-
N/A	1-1/2 "	R4133655	R4133656	R415194	NR	-	-	-	-
N/A	1-5/8 "	R4133338	R4133338	R4166689	NR	-	-	-	-
N/A	1-5/8 "	R4133338	R4133338	R4166689	NR	-	-	-	-
-	1-1/2 "	R4133655	R4133656	R415194	NR	-	-	-	-
-	7/8 "	R4133406	R4133407	R4166820	NR	-	-	-	-
-	7/8 "	R4133406	R4133407	R4166820	NR	-	-	R451125	R451125
-	1-1/2 "	R4133655	R4133656	R415194	NR	-	-	-	-
-	1-1/2 "	R4133655	R4133656	R415194	NR	-	-	-	-
-	1-1/2 "	R4133655	R4133656	R415194	NR	-	-	-	-
-	7/8 "	R4133406	R4133407	R4166820	NR	-	-	-	-
-	7/8 "	R4133406	R4133407	R4166820	NR	-	-	R451125	R451125
-	1-1/2 "	R4133655	R4133656	R415194	NR	-	-	-	-
-	1-1/2 "	R4133655	R4133656	R415194	NR	-	-	-	-
-	1-1/2 "	R4133655	R4133656	R415194	NR	-	-	-	-
-	7/8 "	R4133406	R4133407	R4166820	NR	-	-	-	-
-	7/8 "	R4133406	R4133407	R4166820	NR	-	-	R451125	R451125
-	1-1/2 "	R4133655	R4133656	R415194	NR	-	-	-	-
-	1-1/2 "	R4133655	R4133656	R415194	NR	-	-	-	-
-	1-1/2 "	R4133655	R4133656	R415194	NR	-	-	-	-
-	7/8 "	R4133406	R4133407	R4166820	NR	-	-	-	-
-	7/8 "	R4133406	R4133407	R4166820	NR	-	-	R451125	R451125
-	1-1/2 "	R4133655	R4133656	R415194	NR	-	-	-	-
-	1-1/2 "	R4133655	R4133656	R415194	NR	-	-	-	-

MAKE MODEL YEAR AXLE CODE AXLE WEIGHT	AXLE & BRK. TYPE	BRK. MFG.	BRAKE SIZE	FMSI	MERITOR DISC PAD OR BRAKE SHOE	MERITOR GUIDE PIN OR RETURN SPRING KIT	MERITOR CALIPER HWD. KIT OR RETURN SPRING KIT	MERITOR ADJUSTER KIT (LEFT WHEEL)	MERITOR ADJUSTER KIT (RIGHT WHEEL)
GMC / CHEV(Cont.)									
40, 4000 SERIES-20,000 lb. GVW(Cont.)									
1967 P4T042	Ra	GM	15 " x 4 "	4640 - 427	R700427	R40H550	R404121	R40H3510	R40H3511
P4T042 F050	Fa	GM	14 " x 2-1/2 "	2039 - 299	N/A	R40H599	R40H9206	R40H3500	R40H3501
P4T042 F070	Fa	GM	14 " x 2-1/2 "	2039 - 299	N/A	R40H599	R40H9206	R40H3500	R40H3501
P4T042 H110, H135	Ra	GM	15 " x 4 "	4640 - 427	R700427	R40H550	R404121	R40H3510	R40H3511
P4T042 H135, H150	Ra	GM	15 " x 5 "	4639 - 442	R700442	R40H550	R404121	R40H3510	R40H3511
50, 500, 5000 SERIES									
2002 C5H042, C5H064 Topkick, Kodiak	Fd	BX		7815 - D380	MD184	R40H5010	R40H5519	NR	NR
	Fd	BX		7815 - D380	MD184	R40H5010	R40H5519	NR	NR
	Rd	DN		7141 - D224	MD224[339]	69310693	60050153[277]	NR	NR
	Rd	DN		7141 - D224	MD224[339]	69310693	60050153[277]	NR	NR
2001	Fd	BX		7815 - D380	MD184	R40H5010	R40H5519	NR	NR
	Fd	BX		7815 - D380	MD184	R40H5010	R40H5519	NR	NR
	Rd	DN		7141 - D224	MD224[339]	69310693	60050153[277]	NR	NR
	Rd	DN		7141 - D224	MD224[339]	69310693	60050153[277]	NR	NR
2000	Fd	BX		7815 - D380	MD184	R40H5010	R40H5519	NR	NR
	Fd	BX		7815 - D380	MD184	R40H5010	R40H5519	NR	NR
	Rd	DN		7141 - D224	MD224[339]	69310693	60050153[277]	NR	NR
	Rd	DN		7141 - D224	MD224[339]	69310693	60050153[277]	NR	NR
1999	Fd	BX		7815 - D380	MD184	R40H5010	R40H5519	NR	NR
	Fd	BX		7815 - D380	MD184	R40H5010	R40H5519	NR	NR
	Rd	DN		7141 - D224	MD224[339]	69310693	60050153[277]	NR	NR
	Rd	DN		7141 - D224	MD224[339]	69310693	60050153[277]	NR	NR
1998	Fd	BX		7815 - D380	MD184	R40H5010	R40H5519	NR	NR
	Fd	BX		7815 - D380	MD184	R40H5010	R40H5519	NR	NR
	Rd	DN		7141 - D224	MD224[339]	69310693	60050153[277]	NR	NR
	Rd	DN		7141 - D224	MD224[339]	69310693	60050153[277]	NR	NR
1997	Fd	BX		7815 - D380	MD184	R40H5010	R40H5519	NR	NR
	Fd	BX		7815 - D380	MD184	R40H5010	R40H5519	NR	NR
	Rd	DN		7141 - D224	MD224[339]	69310693	60050153[277]	NR	NR
	Rd	DN		7141 - D224	MD224[339]	69310693	60050153[277]	NR	NR
1996	Fd	BX		7815 - D380	MD184	R40H5010	R40H5519	NR	NR
	Fd	BX		7815 - D380	MD184	R40H5010	R40H5519	NR	NR
	Rd	DN		7141 - D224	MD224[339]	69310693	60050153[277]	NR	NR
	Rd	DN		7141 - D224	MD224[339]	69310693	60050153[277]	NR	NR
1995	Fd	BX		7815 - D380	MD184	R40H5010	R40H5519	NR	NR
	Fd	BX		7815 - D380	MD184	R40H5010	R40H5519	NR	NR
	Rd	DN		7141 - D224	MD224[339]	69310693	60050153[277]	NR	NR
	Rd	DN		7141 - D224	MD224[339]	69310693	60050153[277]	NR	NR
W5S042	Fa		12-19/32" x 4-5/16"	1458 - S672	R46672	R4011281	R4011262	N/A	N/A
	Ra		12-19/32"x4-23/32"	1455 - S669	R469826	N/A	N/A	N/A	N/A
	Ra		12-19/32"x4-23/32"	1455 - S669	R469826	N/A	N/A	N/A	N/A
1994 C5H042, C5H064 Topkick, Kodiak	Fd	BX		7815 - D380	MD184	R40H5010	R40H5519	NR	NR
	Fd	BX		7815 - D380	MD184	R40H5010	R40H5519	NR	NR
	Rd	DN		7141 - D224	MD224[339]	69310693	60050153[277]	NR	NR
	Rd	DN		7141 - D224	MD224[339]	69310693	60050153[277]	NR	NR

37 - Also available as a New unit
268 - 5 Stud, Hat Shape
323 - 17.50" Length

41 - Aluminum piston
277 - For Pad Retainer, Use 69160441
339 - Use 69160441 for Disc Pad Retainer Clip

72 - Phenolic/Steel Face
307 - Power Brakes, Single System Hydrovac

Contact our Customer Service Teams
1-888-725-9355

MERITOR DRUM OR ROTOR NO.	CALIPER OR CYLINDER BORE SIZE	MERITOR CALIPER OR WHEEL CYLINDER (LEFT)	MERITOR CALIPER OR WHEEL CYLINDER (RIGHT)	MERITOR CALIPER OR WHEEL CYLINDER REPAIR KIT	MERITOR CALIPER PISTON	MERITOR MASTER CYLINDER	MERITOR MASTER CYLINDER KIT	MERITOR BRAKE HOSE (LEFT)	MERITOR BRAKE HOSE (RIGHT)
									GMC / CHEV(Cont.)
									40, 4000 SERIES-20,000 lb. GVW(Cont.)
-	1-1/2 "	R4133655	R4133656	R415194	NR	-	-	-	-
-	7/8 "	R4133406	R4133407	R4166820	NR	-	-	-	-
-	7/8 "	R4133406	R4133407	R4166820	NR	-	-	R451125	R451125
-	1-1/2 "	R4133655	R4133656	R415194	NR	-	-	-	-
-	1-1/2 "	R4133655	R4133656	R415194	NR	-	-	-	-
									50, 500, 5000 SERIES
23-123046-002	2-19/32 "	R42R55314	R42R55314[37]	R40107771	R4090100P[72]	R4111264	N/A	R4577857	R4577857
23-123041-002	2-19/32 "	R42R55314	R42R55314[37]	R40107771	R4090100P[72]	R4111264	N/A	R4577868	R4577868
23-123486-002[268]	2-1/2 "	R424244X	R424244X[37]	60050266	69270757[41]	-	-	R451124[323]	R451124
23-123486-002[268]	2-1/2 "	R424244X	R424244X[37]	60050266	69270757[41]	-	-	R451124[323]	R451124
23-123041-002	2-19/32 "	R42R55314	R42R55314[37]	R40107771	R4090100P[72]	R4111264	N/A	R4577868	R4577868
23-123046-002	2-19/32 "	R42R55314	R42R55314[37]	R40107771	R4090100P[72]	R4111264	N/A	R4577857	R4577857
23-123486-002[268]	2-1/2 "	R424244X	R424244X[37]	60050266	69270757[41]	-	-	R451124[323]	R451124
23-123486-002[268]	2-1/2 "	R424244X	R424244X[37]	60050266	69270757[41]	-	-	R451124[323]	R451124
23-123041-002	2-19/32 "	R42R55314	R42R55314[37]	R40107771	R4090100P[72]	R4111264	N/A	R4577868	R4577868
23-123046-002	2-19/32 "	R42R55314	R42R55314[37]	R40107771	R4090100P[72]	R4111264	N/A	R4577857	R4577857
23-123486-002[268]	2-1/2 "	R424244X	R424244X[37]	60050266	69270757[41]	-	-	R451124[323]	R451124
23-123486-002[268]	2-1/2 "	R424244X	R424244X[37]	60050266	69270757[41]	-	-	R451124[323]	R451124
23-123046-002	2-19/32 "	R42R55314	R42R55314[37]	R40107771	R4090100P[72]	R4111264	N/A	R4577857	R4577857
23-123041-002	2-19/32 "	R42R55314	R42R55314[37]	R40107771	R4090100P[72]	R4111264	N/A	R4577868	R4577868
23-123486-002[268]	2-1/2 "	R424244X	R424244X[37]	60050266	69270757[41]	-	-	R451124[323]	R451124
23-123486-002[268]	2-1/2 "	R424244X	R424244X[37]	60050266	69270757[41]	-	-	R451124[323]	R451124
23-123046-002	2-19/32 "	R42R55314	R42R55314[37]	R40107771	R4090100P[72]	R4111264	N/A	R4577857	R4577857
23-123041-002	2-19/32 "	R42R55314	R42R55314[37]	R40107771	R4090100P[72]	R4111264	N/A	R4577868	R4577868
23-123486-002[268]	2-1/2 "	R424244X	R424244X[37]	60050266	69270757[41]	-	-	R451124[323]	R451124
23-123486-002[268]	2-1/2 "	R424244X	R424244X[37]	60050266	69270757[41]	-	-	R451124[323]	R451124
23-123041-002	2-19/32 "	R42R55314	R42R55314[37]	R40107771	R4090100P[72]	R4111264	N/A	R4577868	R4577868
23-123046-002	2-19/32 "	R42R55314	R42R55314[37]	R40107771	R4090100P[72]	R4111264	N/A	R4577857	R4577857
23-123486-002[268]	2-1/2 "	R424244X	R424244X[37]	60050266	69270757[41]	-	-	R451124[323]	R451124
23-123486-002[268]	2-1/2 "	R424244X	R424244X[37]	60050266	69270757[41]	-	-	R451124[323]	R451124
23-123041-002	2-19/32 "	R42R55314	R42R55314[37]	R40107771	R4090100P[72]	R4111264	N/A	R4577868	R4577868
23-123046-002	2-19/32 "	R42R55314	R42R55314[37]	R40107771	R4090100P[72]	R4111264	N/A	R4577857	R4577857
23-123486-002[268]	2-1/2 "	R424244X	R424244X[37]	60050266	69270757[41]	-	-	R451124[323]	R451124
23-123486-002[268]	2-1/2 "	R424244X	R424244X[37]	60050266	69270757[41]	-	-	R451124[323]	R451124
N/A	1.4375	N/A	R4111282	R4111292	NR	R4110348[307]	R4110406	R4511249	R4511249
N/A	1-1/2 "	R 4111284	R 4111283	R4111291	NR	-	-	-	-
N/A	1-1/2 "	R 4111286	R 4111285	R4111291	NR	-	-	-	-
23-123041-002	2-19/32 "	R42R55314	R42R55314[37]	R40107771	R4090100P[72]	R4111264	N/A	R4577868	R4577868
23-123046-002	2-19/32 "	R42R55314	R42R55314[37]	R40107771	R4090100P[72]	R4111264	N/A	R4577857	R4577857
23-123486-002[268]	2-1/2 "	R424244X	R424244X[37]	60050266	69270757[41]	-	-	R451124[323]	R451124
23-123486-002[268]	2-1/2 "	R424244X	R424244X[37]	60050266	69270757[41]	-	-	R451124[323]	R451124

MAKE MODEL YEAR AXLE CODE AXLE WEIGHT	AXLE & BRK. TYPE	BRK. MFG.	BRAKE SIZE	FMSI	MERITOR DISC PAD OR BRAKE SHOE	MERITOR GUIDE PIN OR RETURN SPRING KIT	MERITOR CALIPER HWD. KIT OR RETURN SPRING KIT	MERITOR ADJUSTER KIT (LEFT WHEEL)	MERITOR ADJUSTER KIT (RIGHT WHEEL)
GMC / CHEV(Cont.)									
50, 500, 5000 SERIES(Cont.)									
1994 W5S042	Fa		320mm x 110mm	1458 - S672	R46672	R4011281	R4011262	N/A	N/A
	Ra		12-19/32"x4-23/32"	1455 - S669	R469826	N/A	N/A	N/A	N/A
	Ra		12-19/32"x4-23/32"	1455 - S669	R469826	N/A	N/A	N/A	N/A
1993 C5H042, C5H064 Topkick, Kodiak	Fd	BX		7815 - D380	MD184	R40H5010	R40H5519	NR	NR
	Fd	BX		7815 - D380	MD184	R40H5010	R40H5519	NR	NR
	Rd	DN		7141 - D224	MD224[339]	69310693	60050153[277]	NR	NR
	Rd	DN		7141 - D224	MD224[339]	69310693	60050153[277]	NR	NR
W5S042	Fa		12-19/32" x 4-5/16"	1458 - S672	R46672	R4011281	R4011262	N/A	N/A
	Ra		12-19/32"x4-23/32"	1455 - S669	R469826	N/A	N/A	N/A	N/A
	Ra		12-19/32"x4-23/32"	1455 - S669	R469826	N/A	N/A	N/A	N/A
1992 C5H042, C5H064 Topkick, Kodiak	Fd	BX		7815 - D380	MD184	R40H5010	R40H5519	NR	NR
	Fd	BX		7815 - D380	MD184	R40H5010	R40H5519	NR	NR
	Rd	DN		7141 - D224	MD224[339]	69310693	60050153[277]	NR	NR
	Rd	DN		7141 - D224	MD224[339]	69310693	60050153[277]	NR	NR
W5S042	Fa		12-19/32 " x 4-5/16 "	1458 - S672	R46672	R4011281	R4011262	N/A	N/A
	Ra		12-19/32"x4-23/32"	1455 - S669	R469826	N/A	N/A	N/A	N/A
	Ra		12-19/32"x4-23/32"	1455 - S669	R469826	N/A	N/A	N/A	N/A
1991 C5H042, C5H064 Topkick, Kodiak	Fd	BX		7815 - D380	MD184	R40H5010	R40H5519	NR	NR
	Fd	BX		7815 - D380	MD184	R40H5010	R40H5519	NR	NR
	Rd	DN		7141 - D224	MD224[339]	69310693	60050153[277]	NR	NR
	Rd	DN		7141 - D224	MD224[339]	69310693	60050153[277]	NR	NR
W5S042					R46672	R4011281	R4011262	N/A	N/A
	Fa		12-19/32" x 4-5/16"	1458 - S672	R46672	R4011281	R4011262	N/A	N/A
	Ra		12-19/32"x4-23/32"	1455 - S669	R469826	N/A	N/A	N/A	N/A
	Ra		12-19/32"x4-23/32"	1455 - S669	R469826	N/A	N/A	N/A	N/A
1990 C5D042, C5D064 Conventional	Rd	DN		7141 - D224	MD224[339]	69310693	60050153[277]	NR	NR
	Rd	DN		7141 - D224	MD224[339]	69310693	60050153[277]	NR	NR
	Rd	DN		7141 - D224	MD224[339]	69310693	60050153[277]	NR	NR
	Rd	DN		7141 - D224	MD224[339]	69310693	60050153[277]	NR	NR
	Rd	DN		7141 - D224	MD224[339]	69310693	60050153[277]	NR	NR
	Rd	DN		7141 - D224	MD224[339]	69310693	60050153[277]	NR	NR
C5H042, C5H064 Topkick, Kodiak	Fd	BX		7815 - D380	MD184	R40H5010	R40H5519	NR	NR
	Fd	BX		7815 - D380	MD184	R40H5010	R40H5519	NR	NR
	Rd	DN		7141 - D224	MD224[339]	69310693	60050153[277]	NR	NR
	Rd	DN		7141 - D224	MD224[339]	69310693	60050153[277]	NR	NR
W5S042					R46672	R4011281	R4011262	N/A	N/A
	Fa		12-19/32" x 4-5/16"	1458 - S672	R46672	R4011281	R4011262	N/A	N/A
	Ra		12-19/32"x4-23/32"	1455 - S669	R469826	N/A	N/A	N/A	N/A
	Ra		12-19/32"x4-23/32"	1455 - S669	R469826	N/A	N/A	N/A	N/A
1989 C5D042, C5D064 Conventional	Fd	BX		7815 - D380	MD184	R40H5010	R40H5519	NR	NR

37 - Also available as a New unit
72 - Phenolic/Steel Face
307 - Power Brakes, Single System Hydrovac
41 - Aluminum piston
268 - 5 Stud, Hat Shape
323 - 17.50" Length
54 - Manual Brakes
277 - For Pad Retainer, Use 69160441
339 - Use 69160441 for Disc Pad Retainer Clip

MERITOR DRUM OR ROTOR NO.	CALIPER OR CYLINDER BORE SIZE	MERITOR CALIPER OR WHEEL CYLINDER (LEFT)	MERITOR CALIPER OR WHEEL CYLINDER (RIGHT)	MERITOR CALIPER OR WHEEL CYLINDER REPAIR KIT	MERITOR CALIPER PISTON	MERITOR MASTER CYLINDER	MERITOR MASTER CYLINDER KIT	MERITOR BRAKE HOSE (LEFT)	MERITOR BRAKE HOSE (RIGHT)
GMC / CHEV(Cont.)									
50, 500, 5000 SERIES(Cont.)									
N/A	1.4375	N/A	R4111282	R4111292	NR	R4110348[307]	R4110406	R4511249	R4511249
N/A	1-1/2 "	R 4111284	R 4111283	R4111291	NR	-	-	-	-
N/A	1-1/2 "	R 4111286	R 4111285	R4111291	NR	-	-	-	-
23-123041-002	2-19/32 "	R42R55314	R42R55314[37]	R40107771	R4090100P[72]	R4111264	N/A	R4577868	R4577868
23-123046-002	2-19/32 "	R42R55314	R42R55314[37]	R40107771	R4090100P[72]	R4111264	N/A	R4577857	R4577857
23-123486-002[268]	2-1/2 "	R424244X	R424244X[37]	60050266	6927075741	-	-	R451124[323]	R451124
23-123486-002[268]	2-1/2 "	R424244X	R424244X[37]	60050266	6927075741	-	-	R451124[323]	R451124
N/A	1.4375	N/A	R4111282	R4111292	NR	R4110348[307]	R4110406	R4511249	R4511249
N/A	1-1/2 "	R 4111284	R 4111283	R4111291	NR	-	-	-	-
N/A	1-1/2 "	R 4111286	R 4111285	R4111291	NR	-	-	-	-
23-123046-002	2-19/32 "	R42R55314	R42R55314[37]	R40107771	R4090100P[72]	R4111264	N/A	R4577857	R4577857
23-123041-002	2-19/32 "	R42R55314	R42R55314[37]	R40107771	R4090100P[72]	R4111264	N/A	R4577868	R4577868
23-123486-002[268]	2-1/2 "	R424244X	R424244X[37]	60050266	6927075741	-	-	R451124[323]	R451124
23-123486-002[268]	2-1/2 "	R424244X	R424244X[37]	60050266	6927075741	-	-	R451124[323]	R451124
N/A	1.4375	N/A	R4111282	R4111292	NR	R4110348[307]	R4110406	R4511249	R4511249
N/A	1-1/2 "	R 4111284	R 4111283	R4111291	NR	-	-	-	-
N/A	1-1/2 "	R 4111286	R 4111285	R4111291	NR	-	-	-	-
23-123046-002	2-19/32 "	R42R55314	R42R55314[37]	R40107771	R4090100P[72]	R4111264	N/A	R4577857	R4577857
23-123041-002	2-19/32 "	R42R55314	R42R55314[37]	R40107771	R4090100P[72]	R4111264	N/A	R4577868	R4577868
23-123486-002[268]	2-1/2 "	R424244X	R424244X[37]	60050266	6927075741	-	-	R451124[323]	R451124
23-123486-002[268]	2-1/2 "	R424244X	R424244X[37]	60050266	6927075741	-	-	R451124[323]	R451124
N/A		N/A	R4111282	R4111292	NR	N/A[54]	N/A	R4511249	R4511249
N/A	1.4375	N/A	R4111282	R4111292	NR	R4110348[307]	R4110406	R4511249	R4511249
N/A	1-1/2 "	R 4111286	R 4111285	R4111291	NR	-	-	-	-
N/A	1-1/2 "	R 4111284	R 4111283	R4111291	NR	-	-	-	-
23-123486-002[268]	2-1/2 "	R424244X	R424244X[37]	60050266	6927075741	-	-	R4510645	Discontinued
23-123486-002[268]	2-1/2 "	R424244X	R424244X[37]	60050266	6927075741	-	-	R451124[323]	R451124
23-123486-002[268]	2-1/2 "	R424244X	R424244X[37]	60050266	6927075741	-	-	R451124[323]	R451124
23-123486-002[268]	2-1/2 "	R424244X	R424244X[37]	60050266	6927075741	-	-	R4510645	Discontinued
23-123486-002[268]	2-1/2 "	R424244X	R424244X[37]	60050266	6927075741	-	-	R451124[323]	R451124
23-123486-002[268]	2-1/2 "	R424244X	R424244X[37]	60050266	6927075741	-	-	R451124[323]	R451124
23-123046-002	2-19/32 "	R42R55314	R42R55314[37]	R40107771	R4090100P[72]	R4111264	N/A	R4577857	R4577857
23-123041-002	2-19/32 "	R42R55314	R42R55314[37]	R40107771	R4090100P[72]	R4111264	N/A	R4577868	R4577868
23-123486-002[268]	2-1/2 "	R424244X	R424244X[37]	60050266	6927075741	-	-	R451124[323]	R451124
23-123486-002[268]	2-1/2 "	R424244X	R424244X[37]	60050266	6927075741	-	-	R451124[323]	R451124
N/A		N/A	R4111282	R4111292	NR	N/A[54]	N/A	R4511249	R4511249
N/A	1.4375	N/A	R4111282	R4111292	NR	R4110348[307]	R4110406	R4511249	R4511249
N/A	1-1/2 "	R 4111284	R 4111283	R4111291	NR	-	-	-	-
N/A	1-1/2 "	R 4111286	R 4111285	R4111291	NR	-	-	-	-
23-123041-002	2-19/32 "	R42R55314	R42R55314[37]	R40107771	R4090100P[72]	R4111264	N/A	R4577857	R4577857

MAKE MODEL YEAR AXLE CODE AXLE WEIGHT	AXLE & BRK. TYPE	BRK. MFG.	BRAKE SIZE	FMSI	MERITOR DISC PAD OR BRAKE SHOE	MERITOR GUIDE PIN OR RETURN SPRING KIT	MERITOR CALIPER HWD. KIT OR RETURN SPRING KIT	MERITOR ADJUSTER KIT (LEFT WHEEL)	MERITOR ADJUSTER KIT (RIGHT WHEEL)
GMC / CHEV(Cont.)									
50, 500, 5000 SERIES(Cont.)									
1989									
	Fd	BX		7815 - D380	MD184	R40H5010	R40H5519	NR	NR
	Rd	DN		7141 - D224	MD224[339]	69310693	60050153[277]	NR	NR
	Rd	DN		7141 - D224	MD224[339]	69310693	60050153[277]	NR	NR
	Rd	DN		7141 - D224	MD224[339]	69310693	60050153[277]	NR	NR
C5H042, C5H064 Topkick, Kodiak									
	Rd	DN		7141 - D224	MD224[339]	69310693	60050153[277]	NR	NR
	Rd	DN		7141 - D224	MD224[339]	69310693	60050153[277]	NR	NR
W5S042					R46672	R4011281	R4011262	N/A	N/A
	Fa		12-19/32" x 4-5/16"	1458 - S672	R46672	R4011281	R4011262	N/A	N/A
	Ra		12-19/32"x4-23/32"	1455 - S669	R469826	N/A	N/A	N/A	N/A
	Ra		12-19/32"x4-23/32"	1455 - S669	R469826	N/A	N/A	N/A	N/A
1988 C5D042, C5D064 Conventional									
	Fd	BX		7815 - D380	MD184	R40H5010	R40H5519	NR	NR
	Fd	BX		7815 - D380	MD184	R40H5010	R40H5519	NR	NR
	Rd	DN		7141 - D224	MD224[339]	69310693	60050153[277]	NR	NR
	Rd	DN		7141 - D224	MD224[339]	69310693	60050153[277]	NR	NR
	Rd	DN		7141 - D224	MD224[339]	69310693	60050153[277]	NR	NR
	Rd	DN		7141 - D224	MD224[339]	69310693	60050153[277]	NR	NR
C5H042, C5H064 Topkick, Kodiak									
	Rd	DN		7141 - D224	MD224[339]	69310693	60050153[277]	NR	NR
	Rd	DN		7141 - D224	MD224[339]	69310693	60050153[277]	NR	NR
W5S042					R46672	R4011281	R4011262	N/A	N/A
	Fa		12-19/32" x 4-5/16"	1458 - S672	R46672	R4011281	R4011262	N/A	N/A
	Ra		12-19/32"x4-23/32"	1455 - S669	R469826	N/A	N/A	N/A	N/A
	Ra		12-19/32"x4-23/32"	1455 - S669	R469826	N/A	N/A	N/A	N/A
1987 C5D042, C5D064 Conventional									
	Fa		14 " x 2-1/2 "	2039 - S634	N/A	N/A	N/A	N/A	N/A
	Fa	GM	14 " x 2-1/2 "	2039 - 299	N/A	R40H599	R40H9206	R40H3500	R40H3501
	Ra	GM	15 " x 4 "	4640 - 427	R700427	R40H550	R404121	R40H3510	R40H3511
1986									
	Fa		14 " x 2-1/2 "	2039 - S634	N/A	N/A	N/A	N/A	N/A
	Fa	GM	14 " x 2-1/2 "	2039 - 299	N/A	R40H599	R40H9206	R40H3500	R40H3501
	Ra	GM	15 " x 4 "	4640 - 427	R700427	R40H550	R404121	R40H3510	R40H3511
1985									
	Fa		14 " x 2-1/2 "	2039 - 109	N/A	N/A	N/A	N/A	N/A
	Fa		14 " x 2-1/2 "	2039 - S634	N/A	N/A	N/A	N/A	N/A
	Fa		14 " x 2-1/2 "	2039 - S634	N/A	N/A	N/A	N/A	N/A
	Fa		14 " x 2-1/2 "	2039 - 109	N/A	N/A	N/A	N/A	N/A
	Ra	GM	15 " x 4 "	4640 - 427	R700427	R40H550	R404121	R40H3510	R40H3511
	Ra	GM	15 " x 4 "	4640 - 427	R700427	R40H550	R404121	R40H3510	R40H3511
1984									
	Fa		14 " x 2-1/2 "	2039 - 109	N/A	N/A	N/A	N/A	N/A
	Fa		14 " x 2-1/2 "	2039 - 109	N/A	N/A	N/A	N/A	N/A
	Fa		14 " x 2-1/2 "	2039 - S634	N/A	N/A	N/A	N/A	N/A
	Fa		14 " x 2-1/2 "	2039 - S634	N/A	N/A	N/A	N/A	N/A
	Ra	GM	15 " x 4 "	4640 - 427	R700427	R40H550	R404121	R40H3510	R40H3511
	Ra	GM	15 " x 4 "	4640 - 427	R700427	R40H550	R404121	R40H3510	R40H3511
1983									
	Fa		14 " x 2-1/2 "	2039 - S634	N/A	N/A	N/A	N/A	N/A
	Fa		14 " x 2-1/2 "	2039 - S634	N/A	N/A	N/A	N/A	N/A
	Fa		14 " x 2-1/2 "	2039 - 109	N/A	N/A	N/A	N/A	N/A
	Fa		14 " x 2-1/2 "	2039 - 109	N/A	N/A	N/A	N/A	N/A
	Ra	GM	15 " x 4 "	4640 - 427	R700427	R40H550	R404121	R40H3510	R40H3511
	Ra	GM	15 " x 4 "	4640 - 427	R700427	R40H550	R404121	R40H3510	R40H3511
1982									
	Fa		14 " x 2-1/2 "	2039 - S634	N/A	N/A	N/A	N/A	N/A

37 - Also available as a New unit
54 - Manual Brakes
268 - 5 Stud, Hat Shape

39 - First design, uses steel pistons.
72 - Phenolic/Steel Face
277 - For Pad Retainer, Use 69160441

41 - Aluminum piston
201 - Steel Piston
302 - Power Brakes, Dual System

MERITOR DRUM OR ROTOR NO.	CALIPER OR CYLINDER BORE SIZE	MERITOR CALIPER OR WHEEL CYLINDER (LEFT)	MERITOR CALIPER OR WHEEL CYLINDER (RIGHT)	MERITOR CALIPER OR WHEEL CYLINDER REPAIR KIT	MERITOR CALIPER PISTON	MERITOR MASTER CYLINDER	MERITOR MASTER CYLINDER KIT	MERITOR BRAKE HOSE (LEFT)	MERITOR BRAKE HOSE (RIGHT)
									GMC / CHEV(Cont.)
									50, 500, 5000 SERIES(Cont.)
23-123046-002	2-19/32 "	R42R55314	R42R55314[37]	R40107771	R4090100P[72]	R4111264	N/A	R4577857	R4577857
23-123486-002[268]	2-1/2 "	R424244X	R424244X[37]	60050266	69270757[41]	-	-	R451124[323]	R451124
23-123486-002[268]	2-1/2 "	R424244X	R424244X[37]	60050266	69270757[41]	-	-	R451124[323]	R451124
23-123486-002[268]	2-1/2 "	R424244X	R424244X[37]	60050266	69270757[41]	-	-	R451124[323]	R451124
23-123486-002[268]	2-1/2 "	R424244X	R424244X[37]	60050266	69270757[41]	-	-	R451124[323]	R451124
23-123486-002[268]	2-1/2 "	R424244X	R424244X[37]	60050266	69270757[41]	-	-	R451124[323]	R451124
N/A		N/A	R4111282	R4111292	NR	N/A[54]	N/A	R4511249	R4511249
N/A	1.4375	N/A	R4111282	R4111292	NR	R4110348[307]	R4110406	R4511249	R4511249
N/A	1-1/2 "	R 4111284	R 4111283	R4111291	NR	-	-	-	-
N/A	1-1/2 "	R 4111286	R 4111285	R4111291	NR	-	-	-	-
23-123046-002	2-19/32 "	R42R55245	R42R55245[39]	R402235118	R402238231[201]	R4111264	N/A	R4577857	R4577857
23-123041-002	2-19/32 "	R42R55245	R42R55245[39]	R402235118	R402238231[201]	R4111264	N/A	R4577857	R4577857
23-123486-002[268]	2-1/2 "	R424244X	R424244X[37]	60050266	69270757[41]	-	-	R451124[323]	R451124
23-123486-002[268]	2-1/2 "	R424244X	R424244X[37]	60050266	69270757[41]	-	-	R451124[323]	R451124
23-123486-002[268]	2-1/2 "	R424244X	R424244X[37]	60050266	69270757[41]	-	-	R451124[323]	R451124
23-123486-002[268]	2-1/2 "	R424244X	R424244X[37]	60050266	69270757[41]	-	-	R451124[323]	R451124
23-123486-002[268]	2-1/2 "	R424244X	R424244X[37]	60050266	69270757[41]	-	-	R451124[323]	R451124
23-123486-002[268]	2-1/2 "	R424244X	R424244X[37]	60050266	69270757[41]	-	-	R451124[323]	R451124
N/A		N/A	R4111282	R4111292	NR	N/A[54]	N/A	R4511249	R4511249
N/A	1.4375	N/A	R4111282	R4111292	NR	R4110348[307]	R4110406	R4511249	R4511249
N/A	1-1/2 "	R 4111284	R 4111283	R4111291	NR	-	-	-	-
N/A	1-1/2 "	R 4111286	R 4111285	R4111291	NR	-	-	-	-
N/A	7/8 "	R4133406	R4133407	R4166820	NR	R4111993[302]	R4122386	R4511245	R4511245
N/A	7/8 "	R4133406	R4133407	R4166820	NR	R4111993[302]	R4122386	R4511245	R4511245
N/A	1-1/2 "	R4133655	R4133656	Discontinued	NR	-	-	R451124[323]	R451124
N/A	7/8 "	R4133406	R4133407	R4166820	NR	R4111912[331]	R4122386	R4511245	R4511245
N/A	7/8 "	R4133406	R4133407	R4166820	NR	R4111912[331]	R4122386	R4511245	R4511245
N/A	1-1/2 "	R4133655	R4133656	Discontinued	NR	-	-	R451124[323]	R451124
N/A	7/8 "	R4133406	R4133407	R4166820	NR	R4110348[307]	R4110406	R4577481[323]	R4577481
N/A	7/8 "	R4133406	R4133407	R4166820	NR	R4111993[302]	R4122386	R4577481[323]	R4577481
N/A	7/8 "	R4133406	R4133407	R4166820	NR	R4111993[302]	R4122386	R4577479[325]	R4577479
N/A	7/8 "	R4133406	R4133407	R4166820	NR	R4110348[307]	R4110406	R4577479[325]	R4577479
N/A	1-1/2 "	R4133655	R4133656	Discontinued	NR	-	-	R4577479[323]	R4577479
N/A	1-1/2 "	R4133655	R4133656	Discontinued	NR	-	-	R4577482[323]	R4577482
N/A	7/8 "	R4133406	R4133407	R4166820	NR	R4110348[307]	R4110406	R4577479[325]	R4577479
N/A	7/8 "	R4133406	R4133407	R4166820	NR	R4110348[307]	R4110406	R4577481[323]	R4577481
N/A	7/8 "	R4133406	R4133407	R4166820	NR	R4111993[302]	R4122386	R4577481[323]	R4577481
N/A	7/8 "	R4133406	R4133407	R4166820	NR	R4111993[302]	R4122386	R4577479[325]	R4577479
N/A	1-1/2 "	R4133655	R4133656	Discontinued	NR	-	-	R4577482[323]	R4577482
N/A	1-1/2 "	R4133655	R4133656	Discontinued	NR	-	-	R4577479[323]	R4577479
N/A	7/8 "	R4133406	R4133407	R4166820	NR	R4111993[302]	R4122386	R4577479[325]	R4577479
N/A	7/8 "	R4133406	R4133407	R4166820	NR	R4111993[302]	R4122386	R4577481[323]	R4577481
N/A	7/8 "	R4133406	R4133407	R4166820	NR	R4110348[307]	R4110406	R4577481[323]	R4577481
N/A	7/8 "	R4133406	R4133407	R4166820	NR	R4110348[307]	R4110406	R4577479[325]	R4577479
N/A	1-1/2 "	R4133655	R4133656	Discontinued	NR	-	-	R4577479[323]	R4577479
N/A	1-1/2 "	R4133655	R4133656	Discontinued	NR	-	-	R4577482[323]	R4577482
N/A	7/8 "	R4133406	R4133407	R4166820	NR	R4110348[307]	R4110406	R4511244[324]	R4511244

307 - Power Brakes, Single System Hydrovac
323 - 17.50" Length
324 - 19.91" Length
325 - 23.15" Length
331 - Power Brakes, Delco Dual System
339 - Use 69160441 for Disc Pad Retainer Clip

MAKE MODEL YEAR AXLE CODE AXLE WEIGHT	AXLE & BRK. TYPE	BRK. MFG.	BRAKE SIZE	FMSI	MERITOR DISC PAD OR BRAKE SHOE	MERITOR GUIDE PIN OR RETURN SPRING KIT	MERITOR CALIPER HWD. KIT OR RETURN SPRING KIT	MERITOR ADJUSTER KIT (LEFT WHEEL)	MERITOR ADJUSTER KIT (RIGHT WHEEL)
GMC / CHEV(Cont.)									
50, 500, 5000 SERIES(Cont.)									
1982									
	Fa	GM	14 " x 2-1/2 "	2039 - 299	N/A	R40H599	R40H9206	R40H3500	R40H3501
C5D042, C5D064 Conventional									
H110	Ra	GM	15 " x 4 "	4640 - 427	R700427	R40H550	R404121	R40H3510	R40H3511
C5D042, C5D064 Conventional									
H135	Ra	GM	15 " x 4 "	4640 - 427	R700427	R40H550	R404121	R40H3510	R40H3511
1981 C5D042, C5D064									
Conventional	Fa		14 " x 2-1/2 "	2039 - S634	N/A	N/A	N/A	N/A	N/A
	Fa	GM	14 " x 2-1/2 "	2039 - 299	N/A	R40H599	R40H9206	R40H3500	R40H3501
C5D042, C5D064 Conventional									
H110	Ra	GM	15 " x 4 "	4640 - 427	R700427	R40H550	R404121	R40H3510	R40H3511
C5D042, C5D064 Conventional									
H135	Ra	GM	15 " x 4 "	4640 - 427	R700427	R40H550	R404121	R40H3510	R40H3511
1980 C5D042, C5D064									
Conventional	Fa		14 " x 2-1/2 "	2039 - S634	N/A	N/A	N/A	N/A	N/A
	Fa	GM	14 " x 2-1/2 "	2039 - 299	N/A	R40H599	R40H9206	R40H3500	R40H3501
C5D042, C5D064 Conventional									
H110	Ra	GM	15 " x 4 "	4640 - 427	R700427	R40H550	R404121	R40H3510	R40H3511
C5D042, C5D064 Conventional									
H135	Ra	GM	15 " x 4 "	4640 - 427	R700427	R40H550	R404121	R40H3510	R40H3511
1979 C5D042, C5D064									
Conventional	Fa		14 " x 2-1/2 "	2039 - S634	N/A	N/A	N/A	N/A	N/A
	Fa	GM	14 " x 2-1/2 "	2039 - 299	N/A	R40H599	R40H9206	R40H3500	R40H3501
C5D042, C5D064 Conventional									
H110	Ra	GM	15 " x 4 "	4640 - 427	R700427	R40H550	R404121	R40H3510	R40H3511
C5D042, C5D064 Conventional									
H135	Ra	GM	15 " x 4 "	4640 - 427	R700427	R40H550	R404121	R40H3510	R40H3511
1978 C5D042, C5D064									
Conventional	Fa		14 " x 2-1/2 "	2039 - S634	N/A	N/A	N/A	N/A	N/A
	Fa		14 " x 2-1/2 "	2039 - S634	N/A	N/A	N/A	N/A	N/A
1977									
	Fa		14 " x 2-1/2 "	2039 - S634	N/A	N/A	N/A	N/A	N/A
1973 C5D042, C5D064 Conventional									
F050	Fa	GM	14 " x 2-1/2 "	2039 - 299	N/A	R40H599	R40H9206	R40H3500	R40H3501
	Fa	GM	14 " x 2-1/2 "	2039 - 299	N/A	R40H599	R40H9206	R40H3500	R40H3501
C5D042, C5D064 Conventional									
H110, H135	Ra	GM	15 " x 4 "	4640 - 427	R700427	R40H550	R404121	R40H3510	R40H3511
	Ra	GM	15 " x 4 "	4640 - 427	R700427	R40H550	R404121	R40H3510	R40H3511
1972 C500									
17121, 17221	Rm	WG	15 " x 7 "	4597 - 382	R700383	R40H597	R40H9200	R40H3518	R404148
C500									
H150,T150	Ra	GM	15 " x 4 "	4640 - 427	R700427	R40H550	R404121	R40H3510	R40H3511
	Ra	GM	15 " x 5 "	4639 - 442	R700442	R40H550	R404121	R40H3510	R40H3511
C500									
H170,T170	Ra	WG	15 " x 6 "	4596 - 381	R700381	R40H597	R40H9200	R40H3540	R40H3541
C500 F050									
5,000 lb.	Fa	GM	14 " x 2-1/2 "	2039 - 299	N/A	R40H599	R40H9206	R40H3500	R40H3501

307 - Power Brakes, Single System Hydrovac
323 - 17.50" Length
324 - 19.91" Length
325 - 23.15" Length
327 - Second Design

MERITOR DRUM OR ROTOR NO.	CALIPER OR CYLINDER BORE SIZE	MERITOR CALIPER OR WHEEL CYLINDER (LEFT)	MERITOR CALIPER OR WHEEL CYLINDER (RIGHT)	MERITOR CALIPER OR WHEEL CYLINDER REPAIR KIT	MERITOR CALIPER PISTON	MERITOR MASTER CYLINDER	MERITOR MASTER CYLINDER KIT	MERITOR BRAKE HOSE (LEFT)	MERITOR BRAKE HOSE (RIGHT)
									GMC / CHEV(Cont.)
									50, 500, 5000 SERIES(Cont.)
N/A	7/8 "	R4133406	R4133407	R4166820	NR	N/A	-	-	-
N/A	1-1/2 "	R4133655	R4133656	Discontinued	NR	-	-	R4577482[323]	R4577482
N/A	1-1/2 "	R4133655	R4133656	Discontinued	NR	-	-	R451124[323]	R451124
N/A N/A	7/8 " 7/8 "	R4133406 R4133406	R4133407 R4133407	R4166820 R4166820	NR NR	R4110348[307] N/A	R4110406 -	R4511244[324] -	R4511244 -
N/A	1-1/2 "	R4133655	R4133656	Discontinued	NR	-	-	R451124[323]	R451124
N/A	1-1/2 "	R4133655	R4133656	Discontinued	NR	-	-	R4577482[323]	R4577482
N/A N/A	7/8 " 7/8 "	R4133406 R4133406	R4133407 R4133407	R4166820 R4166820	NR NR	R4110348[307] N/A	R4110406 -	R4511244[324] -	R4511244 -
N/A	1-1/2 "	R4133655	R4133656	Discontinued	NR	-	-	R4577482	R4577482
N/A	1-1/2 "	R4133655	R4133656	Discontinued	NR	-	-	R4577482	R4577482
N/A N/A	7/8 " 7/8 "	R4133406 R4133406	R4133407 R4133407	R4166820 R4166820	NR NR	R4111773 -	R4122809 -	R4511244[324] R4577479[325]	R4511244 R4577479
N/A	1-1/2 "	R4133655	R4133656	Discontinued	NR	-	-	R4577482	R4577482
N/A	1-1/2 "	R4133655	R4133656	Discontinued	NR	-	-	R4577482	R4577482
N/A N/A	7/8 " 7/8 "	R4133406 R4133406	R4133407 R4133407	R4166820 R4166820	NR NR	- -	- -	R4577479[325] R4577481[325]	R4577479 R4577481
-	7/8 "	R4133406	R4133407	R4166820	NR	-	-	R4588564[327]	R4588564
- -	7/8 " 7/8 "	R4133406 R4133406	R4133407 R4133407	R4166820 R4166820	NR NR	- -	- -	- R4577482	- R4577482
- -	1-1/2 " 1-1/2 "	R4133655 R4133655	R4133656 R4133656	R415194 R415194	NR NR	- -	- -	- -	- -
-	1-3/4 "	R4133400	R4133400	R4166917	NR	-	-	-	-
- -	1-1/2 " 1-1/2 "	R4133655 R4133655	R4133656 R4133656	R415194 R415194	NR NR	- -	- -	- -	- -
-	1-5/8 "	R4133338	R4133338	R4166689	NR	-	-	-	-
-	7/8 "	R4133406	R4133407	R4166820	NR	-	-	-	-

MAKE MODEL YEAR AXLE CODE AXLE WEIGHT	AXLE & BRK. TYPE	BRK. MFG.	BRAKE SIZE	FMSI	MERITOR DISC PAD OR BRAKE SHOE	MERITOR GUIDE PIN OR RETURN SPRING KIT	MERITOR CALIPER HWD. KIT OR RETURN SPRING KIT	MERITOR ADJUSTER KIT (LEFT WHEEL)	MERITOR ADJUSTER KIT (RIGHT WHEEL)
GMC / CHEV(Cont.)									
50, 500, 5000 SERIES(Cont.)									
1972									
	Fa	WG	15 " x 3 "	1245C - 321	R700321	R40H521	R40H9237	R40H3502	R40H3503
	Fm	WG	15 " x 3 "	1245A - 235	R700235	R40H521	R40H9201	R404132	R404132[279]
C500 F090 9,000 lb.	Fa	WG	15 " x 3-1/2 "	1280B - 322	R464004	R40H521	R40H9237	R40H3502	R40H3503
	Fm	WG	15 " x 3-1/2 "	1280 - 463	R700463	R40H521	R40H9201	R404132	R404132[279]
C500 15,000 lb. GVW	Ra	GM	15 " x 5 "	4639 - 442	R700442	R40H550	R404121	R40H3510	R40H3511
C500 H170,T170 17,000 lb. GVW	Rm	WG	15 " x 6 "	4596 - 380	R700381	R40H597	R40H9200	R40H3518	R404148
1971 C500 17121, 17221	Rm	WG	15 " x 7 "	4597 - 382	R700383	R40H597	R40H9200	R40H3518	R404148
C500 H150,T150	Ra	GM	15 " x 4 "	4640 - 427	R700427	R40H550	R404121	R40H3510	R40H3511
	Ra	GM	15 " x 5 "	4639 - 442	R700442	R40H550	R404121	R40H3510	R40H3511
C500 H170,T170	Ra	WG	15 " x 6 "	4596 - 381	R700381	R40H597	R40H9200	R40H3540	R40H3541
C500 F050 5,000 lb.	Fa	GM	14 " x 2-1/2 "	2039 - 299	N/A	R40H599	R40H9206	R40H3500	R40H3501
C500 F070 7,000 lb.	Fa	WG	15 " x 3 "	1245C - 321	R700321	R40H521	R40H9237	R40H3502	R40H3503
	Fm	WG	15 " x 3 "	1245A - 235	R700235	R40H521	R40H9201	R404132	R404132[279]
C500 F090 9,000 lb.	Fa	WG	15 " x 3-1/2 "	1280B - 322	R464004	R40H521	R40H9237	R40H3502	R40H3503
	Fm	WG	15 " x 3 "	1245A - 235	R700235	R40H521	R40H9201	R404132	R404132[279]
C500 15,000 lb. GVW	Ra	GM	15 " x 5 "	4639 - 442	R700442	R40H550	R404121	R40H3510	R40H3511
C500 H170,T170 17,000 lb. GVW	Rm	WG	15 " x 6 "	4596 - 380	R700381	R40H597	R40H9200	R40H3518	R404148
1970 C500 17121, 17221	Rm	WG	15 " x 7 "	4597 - 382	R700383	R40H597	R40H9200	R40H3518	R404148
C500 H150,T150	Ra	GM	15 " x 4 "	4640 - 427	R700427	R40H550	R404121	R40H3510	R40H3511
	Ra	GM	15 " x 5 "	4639 - 442	R700442	R40H550	R404121	R40H3510	R40H3511
C500 H170,T170	Ra	WG	15 " x 6 "	4596 - 381	R700381	R40H597	R40H9200	R40H3540	R40H3541
C500 F050 5,000 lb.	Fa	GM	14 " x 2-1/2 "	2039 - 299	N/A	R40H599	R40H9206	R40H3500	R40H3501
C500 F070 7,000 lb.	Fa	WG	15 " x 3 "	1245C - 321	R700321	R40H521	R40H9237	R40H3502	R40H3503
	Fm	WG	15 " x 3 "	1245A - 235	R700235	R40H521	R40H9201	R404132	R404132[279]
C500 F090 9,000 lb.	Fa	WG	15 " x 3-1/2 "	1280B - 322	R464004	R40H521	R40H9237	R40H3502	R40H3503
	Fm	WG	15 " x 3-1/2 "	1280 - 463	R700463	R40H521	R40H9201	R404132	R404132[279]
C500 15,000 lb. GVW	Ra	GM	15 " x 5 "	4639 - 442	R700442	R40H550	R404121	R40H3510	R40H3511
C500 H170,T170 17,000 lb. GVW	Rm	WG	15 " x 6 "	4596 - 380	R700381	R40H597	R40H9200	R40H3518	R404148
1969 C500 17121, 17221	Rm	WG	15 " x 7 "	4597 - 382	R700383	R40H597	R40H9200	R40H3518	R404148
C500 H150,T150	Ra	GM	15 " x 4 "	4640 - 427	R700427	R40H550	R404121	R40H3510	R40H3511

279 - Has 2.29" Adjuster Studs, For 2.60" Studs Use E-4133

MERITOR DRUM OR ROTOR NO.	CALIPER OR CYLINDER BORE SIZE	MERITOR CALIPER OR WHEEL CYLINDER (LEFT)	MERITOR CALIPER OR WHEEL CYLINDER (RIGHT)	MERITOR CALIPER OR WHEEL CYLINDER REPAIR KIT	MERITOR CALIPER PISTON	MERITOR MASTER CYLINDER	MERITOR MASTER CYLINDER KIT	MERITOR BRAKE HOSE (LEFT)	MERITOR BRAKE HOSE (RIGHT)
									GMC / CHEV(Cont.)
									50, 500, 5000 SERIES(Cont.)
-	1-1/8 "	R4133320	R4133321	R4166926	NR	-	-	R451125	R451125
-	1-1/8 "	R4133320	R4133321	R4166926	NR	-	-	R451125	R451125
-	1-1/4 "	R4133376	R4133377	R4166923	NR	-	-	-	-
-	1-1/4 "	R4133376	R4133377	R4166923	NR	-	-	-	-
-	1-1/2 "	R4133655	R4133656	R415194	NR	-	-	-	-
-	1-5/8 "	R4133338	R4133338	R4166689	NR	-	-	-	-
-	1-3/4 "	R4133400	R4133400	R4166917	NR	-	-	-	-
-	1-1/2 "	R4133655	R4133656	R415194	NR	-	-	-	-
-	1-1/2 "	R4133655	R4133656	R415194	NR	-	-	-	-
-	1-5/8 "	R4133338	R4133338	R4166689	NR	-	-	-	-
-	7/8 "	R4133406	R4133407	R4166820	NR	-	-	-	-
-	1-1/8 "	R4133320	R4133321	R4166926	NR	-	-	R451125	R451125
-	1-1/8 "	R4133320	R4133321	R4166926	NR	-	-	R451125	R451125
-	1-1/4 "	R4133376	R4133377	R4166923	NR	-	-	-	-
-	1-1/8 "	R4133320	R4133321	R4166926	NR	-	-	-	-
-	1-1/2 "	R4133655	R4133656	R415194	NR	-	-	-	-
-	1-5/8 "	R4133338	R4133338	R4166689	NR	-	-	-	-
-	1-3/4 "	R4133400	R4133400	R4166917	NR	-	-	-	-
-	1-1/2 "	R4133655	R4133656	R415194	NR	-	-	-	-
-	1-1/2 "	R4133655	R4133656	R415194	NR	-	-	-	-
-	1-5/8 "	R4133338	R4133338	R4166689	NR	-	-	-	-
-	7/8 "	R4133406	R4133407	R4166820	NR	-	-	-	-
-	1-1/8 "	R4133320	R4133321	R4166926	NR	-	-	R451125	R451125
-	1-1/8 "	R4133320	R4133321	R4166926	NR	-	-	R451125	R451125
-	1-1/4 "	R4133376	R4133377	R4166923	NR	-	-	-	-
-	1-1/4 "	R4133376	R4133377	R4166923	NR	-	-	-	-
-	1-1/2 "	R4133655	R4133656	R415194	NR	-	-	-	-
-	1-5/8 "	R4133338	R4133338	R4166689	NR	-	-	-	-
-	1-3/4 "	R4133400	R4133400	R4166917	NR	-	-	-	-
-	1-1/2 "	R4133655	R4133656	R415194	NR	-	-	-	-

MAKE MODEL YEAR AXLE CODE AXLE WEIGHT	AXLE & BRK. TYPE	BRK. MFG.	BRAKE SIZE	FMSI	MERITOR DISC PAD OR BRAKE SHOE	MERITOR GUIDE PIN OR RETURN SPRING KIT	MERITOR CALIPER HWD. KIT OR RETURN SPRING KIT	MERITOR ADJUSTER KIT (LEFT WHEEL)	MERITOR ADJUSTER KIT (RIGHT WHEEL)
GMC / CHEV(Cont.)									
50, 500, 5000 SERIES(Cont.)									
1969 C500 H150,T150	Ra	GM	15 " x 5 "	4639 - 442	R700442	R40H550	R404121	R40H3510	R40H3511
C500 H170,T170	Ra	WG	15 " x 6 "	4596 - 381	R700381	R40H597	R40H9200	R40H3540	R40H3541
C500 F050 5,000 lb.	Fa	GM	14 " x 2-1/2 "	2039 - 299	N/A	R40H599	R40H9206	R40H3500	R40H3501
C500 F070 7,000 lb.	Fa	WG	15 " x 3 "	1245C - 321	R700321	R40H521	R40H9237	R40H3502	R40H3503
	Fm	WG	15 " x 3 "	1245A - 235	R700235	R40H521	R40H9201	R404132	R404132[279]
C500 F090 9,000 lb.	Fa	WG	15 " x 3-1/2 "	1280B - 322	R464004	R40H521	R40H9237	R40H3502	R40H3503
	Fm	WG	15 " x 3-1/2 "	1280 - 463	R700463	R40H521	R40H9201	R404132	R404132[279]
C500 15,000 lb. GVW	Ra	GM	15 " x 5 "	4639 - 442	R700442	R40H550	R404121	R40H3510	R40H3511
C500 H170,T170 17,000 lb. GVW	Rm	WG	15 " x 6 "	4596 - 380	R700381	R40H597	R40H9200	R40H3518	R404148
1968 C500 17121, 17221	Rm	WG	15 " x 7 "	4597 - 382	R700383	R40H597	R40H9200	R40H3518	R404148
C500 H150,T150	Ra	GM	15 " x 4 "	4640 - 427	R700427	R40H550	R404121	R40H3510	R40H3511
	Ra	GM	15 " x 5 "	4639 - 442	R700442	R40H550	R404121	R40H3510	R40H3511
C500 H170,T170	Ra	WG	15 " x 6 "	4596 - 381	R700381	R40H597	R40H9200	R40H3540	R40H3541
C500 F050 5,000 lb.	Fa	GM	14 " x 2-1/2 "	2039 - 299	N/A	R40H599	R40H9206	R40H3500	R40H3501
C500 F070 7,000 lb.	Fa	WG	15 " x 3 "	1245C - 321	R700321	R40H521	R40H9237	R40H3502	R40H3503
	Fm	WG	15 " x 3 "	1245A - 235	R700235	R40H521	R40H9201	R404132	R404132[279]
C500 F090 9,000 lb.	Fa	WG	15 " x 3-1/2 "	1280B - 322	R464004	R40H521	R40H9237	R40H3502	R40H3503
	Fm	WG	15 " x 3 "	1245A - 235	R700235	R40H521	R40H9201	R404132	R404132[279]
C500 15,000 lb. GVW	Ra	GM	15 " x 5 "	4639 - 442	R700442	R40H550	R404121	R40H3510	R40H3511
C500 H170,T170 17,000 lb. GVW	Rm	WG	15 " x 6 "	4596 - 380	R700381	R40H597	R40H9200	R40H3518	R404148
1967 C500 17121, 17221	Ra	WG	15 " x 7 "	4597 - 383	R700383	R40H597	R40H9200	R40H3540	R40H3541
	Ra	WG	15 " x 7 "	4597 - 383	R700383	R40H597	R40H9200	R40H3540	R40H3541
	Rm	WG	15 " x 7 "	4597 - 382	R700383	R40H597	R40H9200	R40H3518	R404148
C500 G161, 361	Ra	WG	15 " x 5 "	1252 - 346	R700346	R40H597	R40H9200	R40H3540	R40H3541
	Ra	WG	15 " x 5 "	1252 - 346	R700346	R40H597	R40H9200	R40H3540	R40H3541
C500 H150,T150	Ra	GM	15 " x 4 "	4640 - 427	R700427	R40H550	R404121	R40H3510	R40H3511
	Ra	GM	15 " x 5 "	4639 - 442	R700442	R40H550	R404121	R40H3510	R40H3511
C500 H170,T170	Ra	WG	15 " x 6 "	4596 - 381	R700381	R40H597	R40H9200	R40H3540	R40H3541
	Ra	WG	15 " x 6 "	4596 - 381	R700381	R40H597	R40H9200	R40H3540	R40H3541
C500 F050 5,000 lb.	Fa	GM	14 " x 2-1/2 "	2039 - 299	N/A	R40H599	R40H9206	R40H3500	R40H3501
	Fa	GM	14 " x 2-1/2 "	2039 - 299	N/A	R40H599	R40H9206	R40H3500	R40H3501
C500 F070 7,000 lb.	Fa	WG	15 " x 3 "	1245C - 321	R700321	R40H521	R40H9237	R40H3502	R40H3503

279 - Has 2.29" Adjuster Studs, For 2.60" Studs Use E-4133

MERITOR DRUM OR ROTOR NO.	CALIPER OR CYLINDER BORE SIZE	MERITOR CALIPER OR WHEEL CYLINDER (LEFT)	MERITOR CALIPER OR WHEEL CYLINDER (RIGHT)	MERITOR CALIPER OR WHEEL CYLINDER REPAIR KIT	MERITOR CALIPER PISTON	MERITOR MASTER CYLINDER	MERITOR MASTER CYLINDER KIT	MERITOR BRAKE HOSE (LEFT)	MERITOR BRAKE HOSE (RIGHT)
GMC / CHEV(Cont.)									
50, 500, 5000 SERIES(Cont.)									
-	1-1/2 "	R4133655	R4133656	R415194	NR	-	-	-	-
-	1-5/8 "	R4133338	R4133338	R4166689	NR	-	-	-	-
-	7/8 "	R4133406	R4133407	R4166820	NR	-	-	-	-
-	1-1/8 "	R4133320	R4133321	R4166926	NR	-	-	R451125	R451125
-	1-1/8 "	R4133320	R4133321	R4166926	NR	-	-	R451125	R451125
-	1-1/4 "	R4133376	R4133377	R4166923	NR	-	-	-	-
-	1-1/4 "	R4133376	R4133377	R4166923	NR	-	-	-	-
-	1-1/2 "	R4133655	R4133656	R415194	NR	-	-	-	-
-	1-5/8 "	R4133338	R4133338	R4166689	NR	-	-	-	-
-	1-3/4 "	R4133400	R4133400	R4166917	NR	-	-	-	-
-	1-1/2 "	R4133655	R4133656	R415194	NR	-	-	-	-
-	1-1/2 "	R4133655	R4133656	R415194	NR	-	-	-	-
-	1-5/8 "	R4133338	R4133338	R4166689	NR	-	-	-	-
-	7/8 "	R4133406	R4133407	R4166820	NR	-	-	-	-
-	1-1/8 "	R4133320	R4133321	R4166926	NR	-	-	R451125	R451125
-	1-1/8 "	R4133320	R4133321	R4166926	NR	-	-	R451125	R451125
-	1-1/4 "	R4133376	R4133377	R4166923	NR	-	-	-	-
-	1-1/8 "	R4133320	R4133321	R4166926	NR	-	-	-	-
-	1-1/2 "	R4133655	R4133656	R415194	NR	-	-	-	-
-	1-5/8 "	R4133338	R4133338	R4166689	NR	-	-	-	-
-	1-3/4 "	R4133400	R4133400	R4166917	NR	-	-	-	-
-	1-3/4 "	R4133400	R4133400	R4166917	NR	-	-	-	-
-	1-3/4 "	R4133400	R4133400	R4166917	NR	-	-	-	-
-	1-1/2 "	R4133336	R4133336	Discontinued	NR	-	-	-	-
-	1-1/2 "	R4133336	R4133336	Discontinued	NR	-	-	-	-
-	1-1/2 "	R4133655	R4133656	R415194	NR	-	-	-	-
-	1-1/2 "	R4133655	R4133656	R415194	NR	-	-	-	-
-	1-5/8 "	R4133338	R4133338	R4166689	NR	-	-	-	-
-	1-5/8 "	R4133338	R4133338	R4166689	NR	-	-	-	-
-	7/8 "	R4133406	R4133407	R4166820	NR	-	-	-	-
-	7/8 "	R4133406	R4133407	R4166820	NR	-	-	-	-
-	1-1/8 "	R4133320	R4133321	R4166926	NR	-	-	R451125	R451125

MAKE MODEL YEAR AXLE CODE AXLE WEIGHT	AXLE & BRK. TYPE	BRK. MFG.	BRAKE SIZE	FMSI	MERITOR DISC PAD OR BRAKE SHOE	MERITOR GUIDE PIN OR RETURN SPRING KIT	MERITOR CALIPER HWD. KIT OR RETURN SPRING KIT	MERITOR ADJUSTER KIT (LEFT WHEEL)	MERITOR ADJUSTER KIT (RIGHT WHEEL)
GMC / CHEV(Cont.)									
50, 500, 5000 SERIES(Cont.)									
1967									
	Fa	WG	15 " x 3 "	1245C - 321	R700321	R40H521	R40H9237	R40H3502	R40H3503
M500 F070									
7,000 lb.	Fm	WG	15 " x 3 "	1245A - 235	R700235	R40H521	R40H9201	R404132	R404132[279]
	Fm	WG	15 " x 3 "	1245A - 235	R700235	R40H521	R40H9201	R404132	R404132[279]
C500 F090									
9,000 lb.	Fa	WG	15 " x 3-1/2 "	1280B - 322	R464004	R40H521	R40H9237	R40H3502	R40H3503
	Fm	WG	15 " x 3-1/2 "	1280 - 463	R700463	R40H521	R40H9201	R404132	R404132[279]
15,000 lb. GVW	Ra	GM	15 " x 5 "	4639 - 442	R700442	R40H550	R404121	R40H3510	R40H3511
C500									
15,000 lb. GVW	Ra	GM	15 " x 4 "	4640 - 427	R700427	R40H550	R404121	R40H3510	R40H3511
	Ra	GM	15 " x 4 "	4640 - 427	R700427	R40H550	R404121	R40H3510	R40H3511
	Ra	GM	15 " x 5 "	4639 - 442	R700442	R40H550	R404121	R40H3510	R40H3511
C500									
17,000 lb. GVW	Ra	WG	15 " x 6 "	4596 - 381	R700381	R40H597	R40H9200	R40H3540	R40H3541
	Ra	WG	15 " x 6 "	4596 - 381	R700381	R40H597	R40H9200	R40H3540	R40H3541
C500 H170,T170									
17,000 lb. GVW	Rm	WG	15 " x 6 "	4596 - 380	R700381	R40H597	R40H9200	R40H3518	R404148
60, 6000 SERIES-20,000-27,500 lb. GVW									
2002 C6H042, C6H064 Topkick,Kodiak									
8,000 lb.	Fd	DN		7141 - D224	MD224[339]	69310693	60050153[277]	NR	NR
	Fd	DN		7141 - D224	MD224[339]	69310693	60050153[277]	NR	NR
C6H042, C6H064 Topkick,Kodiak									
8,000, 11,000lb. GVW	Fd	BX		7142 - D225	MD225	R40H5010	R40H5522	NR	NR
	Fd	BX		7142 - D225	MD225	R40H5010	R40H5522	NR	NR
	Fd	Meritor		7636 - D769	MD769	NR	R4011121	NR	NR
C6H042, C6H064 Topkick,Kodiak									
15,000, 19,000lb. GVW	Rd	DN		7141 - D224	MD224[339]	69310693	60050153[277]	NR	NR
	Rd	DN		7141 - D224	MD224[339]	69310693	60050153[277]	NR	NR
C6H042, C6H064 Topkick,Kodiak									
19,000 lb. GVW	Fd	Meritor		7636 - D769	MD769	NR	R4011121	NR	NR
	Rd	BX		7142 - D225	MD225	R40H5010	R40H5522	NR	NR
	Rd	BX		7142 - D225	MD225	R40H5010	R40H5522	NR	NR
2001 C6H042, C6H064 Topkick,Kodiak									
8,000 lb.	Fd	DN		7141 - D224	MD224[339]	69310693	60050153[277]	NR	NR
	Fd	DN		7141 - D224	MD224[339]	69310693	60050153[277]	NR	NR
C6H042, C6H064 Topkick,Kodiak									
8,000, 11,000lb. GVW	Fd	BX		7142 - D225	MD225	R40H5010	R40H5522	NR	NR
	Fd	BX		7142 - D225	MD225	R40H5010	R40H5522	NR	NR
	Fd	Meritor		7636 - D769	MD769	NR	R4011121	NR	NR
C6H042, C6H064 Topkick,Kodiak									
15,000, 19,000lb. GVW	Rd	DN		7141 - D224	MD224[339]	69310693	60050153[277]	NR	NR
	Rd	DN		7141 - D224	MD224[339]	69310693	60050153[277]	NR	NR
C6H042, C6H064 Topkick,Kodiak									
19,000 lb. GVW	Fd	Meritor		7636 - D769	MD769	NR	R4011121	NR	NR
	Rd	BX		7142 - D225	MD225	R40H5010	R40H5522	NR	NR
	Rd	BX		7142 - D225	MD225	R40H5010	R40H5522	NR	NR
2000 C6H042, C6H064 Topkick,Kodiak									
8,000 lb.	Fd	DN		7141 - D224	MD224[339]	69310693	60050153[277]	NR	NR

37 - Also available as a New unit
71 - Vacuum Power Brakes
277 - For Pad Retainer, Use 69160441
39 - First design, uses steel pistons.
72 - Phenolic/Steel Face
279 - Has 2.29" Adjuster Studs, For 2.60" Studs Use E-4133
41 - Aluminum piston
268 - 5 Stud, Hat Shape
321 - Air Over Hydraulics

MERITOR DRUM OR ROTOR NO.	CALIPER OR CYLINDER BORE SIZE	MERITOR CALIPER OR WHEEL CYLINDER (LEFT)	MERITOR CALIPER OR WHEEL CYLINDER (RIGHT)	MERITOR CALIPER OR WHEEL CYLINDER REPAIR KIT	MERITOR CALIPER PISTON	MERITOR MASTER CYLINDER	MERITOR MASTER CYLINDER KIT	MERITOR BRAKE HOSE (LEFT)	MERITOR BRAKE HOSE (RIGHT)
									GMC / CHEV(Cont.)
									50, 500, 5000 SERIES(Cont.)
-	1-1/8 "	R4133320	R4133321	R4166926	NR	-	-	R451125	R451125
-	1-1/8 "	R4133320	R4133321	R4166926	NR	R4111456[321]	N/A	R451125	R451125
-	1-1/8 "	R4133320	R4133321	R4166926	NR	R4111451[71]	R4122682	R451125	R451125
-	1-1/4 "	R4133376	R4133377	R4166923	NR	-	-	-	-
-	1-1/4 "	R4133376	R4133377	R4166923	NR	-	-	-	-
-	1-1/2 "	R4133655	R4133656	R415194	NR	-	-	-	-
-	1-1/2 "	R4133655	R4133656	R415194	NR	-	-	-	-
-	1-1/2 "	R4133655	R4133656	R415194	NR	-	-	-	-
-	1-1/2 "	R4133655	R4133656	R415194	NR	-	-	-	-
-	1-5/8 "	R4133338	R4133338	R4166689	NR	-	-	-	-
-	1-5/8 "	R4133338	R4133338	R4166689	NR	-	-	-	-
-	1-5/8 "	R4133338	R4133338	R4166689	NR	-	-	-	-
									60, 6000 SERIES-20,000-27,500 lb. GVW
23-123486-002[268]	2-1/2 "	R424244X	R424244X[37]	60050266	69270757[41]	-	-	R4577868	R4577868
23-123486-002[268]	2-1/2 "	R424244X	R424244X[37]	60050266	69270757[41]	-	-	R4577868	R4577868
N/A	2-7/8 "	R42R55250	R42R55250[37]	R4066365	R4090096[72]	-	-	R4577868	R4577868
N/A	2-7/8 "	R42R55250	R42R55250[37]	R4066365	R4090096[72]	-	-	R4577868	R4577868
23-123485-002[392]	70mm	60050321 / 60450455	60050320 / 60450454[39]	-	-	-	-	R4577868	R4577868
23-123486-002[268]	2-1/2 "	R424244X	R424244X[37]	60050266	69270757[41]	-	-	R4510644	R4577864
23-123486-002[268]	2-1/2 "	R424244X	R424244X[37]	60050266	69270757[41]	-	-	R4510644	R4577864
23-123485-002[392]	70mm	60050321 / 60450455	60050320 / 60450454[39]	-	-	-	-	R4577868	R4577868
23-123495-002	2-7/8 "	R42R55250	R42R55250[37]	R4066365	R4090096[72]	-	-	R4510644	R4577864
23-123495-002	2-7/8 "	R42R55250	R42R55250[37]	R4066365	R4090096[72]	-	-	R4510644	R4577864
23-123486-002[268]	2-1/2 "	R424244X	R424244X[37]	60050266	69270757[41]	-	-	R4577868	R4577868
23-123486-002[268]	2-1/2 "	R424244X	R424244X[37]	60050266	69270757[41]	-	-	R4577868	R4577868
N/A	2-7/8 "	R42R55250	R42R55250[37]	R4066365	R4090096[72]	-	-	R4577868	R4577868
N/A	2-7/8 "	R42R55250	R42R55250[37]	R4066365	R4090096[72]	-	-	R4577868	R4577868
23-123485-002[392]	70mm	60050321 / 60450455	60050320 / 60450454[39]	-	-	-	-	R4577868	R4577868
23-123486-002[268]	2-1/2 "	R424244X	R424244X[37]	60050266	69270757[41]	-	-	R4510644	R4577864
23-123486-002[268]	2-1/2 "	R424244X	R424244X[37]	60050266	69270757[41]	-	-	R4510644	R4577864
23-123485-002[392]	70mm	60050321 / 60450455	60050320 / 60450454[39]	-	-	-	-	R4577868	R4577868
23-123495-002	2-7/8 "	R42R55250	R42R55250[37]	R4066365	R4090096[72]	-	-	R4510644	R4577864
23-123495-002	2-7/8 "	R42R55250	R42R55250[37]	R4066365	R4090096[72]	-	-	R4510644	R4577864
23-123486-002[268]	2-1/2 "	R424244X	R424244X[37]	60050266	69270757[41]	-	-	R4577868	R4577868

339 - Use 69160441 for Disc Pad Retainer Clip

392 - 5 Tapped Holes For ABS Mounting Ring

MAKE MODEL YEAR AXLE CODE AXLE WEIGHT	AXLE & BRK. TYPE	BRK. MFG.	BRAKE SIZE	FMSI	MERITOR DISC PAD OR BRAKE SHOE	MERITOR GUIDE PIN OR RETURN SPRING KIT	MERITOR CALIPER HWD. KIT OR RETURN SPRING KIT	MERITOR ADJUSTER KIT (LEFT WHEEL)	MERITOR ADJUSTER KIT (RIGHT WHEEL)
GMC / CHEV(Cont.)									
60, 6000 SERIES-20,000-27,500 lb. GVW (Cont.)									
2000									
	Fd	DN		7141 - D224	MD224[339]	69310693	60050153[277]	NR	NR
C6H042, C6H064									
Topkick,Kodiak									
8,000, 11,000lb. GVW	Fd	BX		7142 - D225	MD225	R40H5010	R40H5522	NR	NR
	Fd	BX		7142 - D225	MD225	R40H5010	R40H5522	NR	NR
	Fd	Meritor		7636 - D769	MD769	NR	R4011121	NR	NR
C6H042, C6H064									
Topkick,Kodiak									
15,000, 19,000lb. GVW	Rd	DN		7141 - D224	MD224[339]	69310693	60050153[277]	NR	NR
	Rd	DN		7141 - D224	MD224[339]	69310693	60050153[277]	NR	NR
C6H042, C6H064									
Topkick,Kodiak									
19,000 lb. GVW	Fd	Meritor		7636 - D769	MD769	NR	R4011121	NR	NR
	Rd	BX		7142 - D225	MD225	R40H5010	R40H5522	NR	NR
	Rd	BX		7142 - D225	MD225	R40H5010	R40H5522	NR	NR
1999									
C6H042, C6H064									
Topkick,Kodiak									
8,000, 11,000lb. GVW	Fd	DN		N/A - N/A	MD769	NR	R4011121	NR	NR
	Fd	DN		N/A - N/A	MD769	NR	R4011121	NR	NR
C6H042, C6H064									
Topkick,Kodiak									
15,000, 19,000lb. GVW	Rd	DN		7141 - D224	MD224[339]	69310693	60050153[277]	NR	NR
	Rd	DN		7141 - D224	MD224[339]	69310693	60050153[277]	NR	NR
1998									
C6H042, C6H064									
Topkick,Kodiak									
8,000, 11,000lb. GVW	Fd	DN		N/A - N/A	MD769	NR	R4011121	NR	NR
	Fd	DN		N/A - N/A	MD769	NR	R4011121	NR	NR
C6H042, C6H064									
Topkick,Kodiak									
15,000, 19,000lb. GVW	Rd	DN		7141 - D224	MD224[339]	69310693	60050153[277]	NR	NR
	Rd	DN		7141 - D224	MD224[339]	69310693	60050153[277]	NR	NR
1997									
C6H042, C6H064									
Topkick,Kodiak	Fd	DN		7141 - D224	MD224[339]	69310693	60050153[277]	NR	NR
	Fd	DN		7141 - D224	MD224[339]	69310693	60050153[277]	NR	NR
	Fd	DN		7142 - D225	MD225	R40H5010	R40H5522	NR	NR
C6H042, C6H064									
Topkick,Kodiak									
8,000, 11,000lb.	Fd	DN		7141 - D224	MD224[339]	69310693	60050153[277]	NR	NR
	Fd	DN		7141 - D224	MD224[339]	69310693	60050153[277]	NR	NR
C6H042, C6H064									
Topkick,Kodiak									
12,000lb.	Fd	DN		7141 - D224	MD224[339]	69310693	60050153[277]	NR	NR
C6H042, C6H064									
Topkick,Kodiak									
15,000, 19,000lb.	Rd	DN		7141 - D224	MD224[339]	69310693	60050153[277]	NR	NR
	Rd	DN		7141 - D224	MD224[339]	69310693	60050153[277]	NR	NR
C6H042, C6H064									
Topkick,Kodiak									
15,000lb.	Rd	DN		N/A - N/A	MD769	NR	R4011121	NR	NR
C6H042, C6H064									
Topkick,Kodiak									
19,000lb.	Rd	DN		N/A - N/A	MD769	NR	R4011121	NR	NR
C6H042, C6H064									
Topkick,Kodiak									
21,000, 23,000lb.	Rd	DN		7142 - D225	MD225	R40H5010	R40H5522	NR	NR
1996									
P6S042	Fd	DN		7141 - D224	MD224[339]	69310693	60050153[277]	NR	NR
	Rd	BX		7142 - D225	MD225	R40H5010	R40H5522	NR	NR
C6H042, C6H064									
Topkick,Kodiak									
8,000 lb.	Fd	DN		7141 - D224	MD224[339]	69310693	60050153[277]	NR	NR

37 - Also available as a New unit
72 - Phenolic/Steel Face
322 - With Aluminum Wheels
39 - First design, uses steel pistons.
268 - 5 Stud, Hat Shape
339 - Use 69160441 for Disc Pad Retainer Clip
41 - Aluminum piston
277 - For Pad Retainer, Use 69160441
392 - 5 Tapped Holes For ABS Mounting Ring

MERITOR DRUM OR ROTOR NO.	CALIPER OR CYLINDER BORE SIZE	MERITOR CALIPER OR WHEEL CYLINDER (LEFT)	MERITOR CALIPER OR WHEEL CYLINDER (RIGHT)	MERITOR CALIPER OR WHEEL CYLINDER REPAIR KIT	MERITOR CALIPER PISTON	MERITOR MASTER CYLINDER	MERITOR MASTER CYLINDER KIT	MERITOR BRAKE HOSE (LEFT)	MERITOR BRAKE HOSE (RIGHT)
GMC / CHEV(Cont.)									
60, 6000 SERIES-20,000-27,500 lb. GVW (Cont.)									
23-123486-002[268]	2-1/2 "	R424244X	R424244X[37]	60050266	69270757[41]	-	-	R4577868	R4577868
N/A	2-7/8 "	R42R55250	R42R55250[37]	R4066365	R4090096[72]	-	-	R4577868	R4577868
N/A	2-7/8 "	R42R55250	R42R55250[37]	R4066365	R4090096[72]	-	-	R4577868	R4577868
23-123485-002[392]	70mm	60050321 / 60450455	60050320 / 60450454[39]	-	-	-	-	R4577868	R4577868
23-123486-002[268]	2-1/2 "	R424244X	R424244X[37]	60050266	69270757[41]	-	-	R4510644	R4577864
23-123486-002[268]	2-1/2 "	R424244X	R424244X[37]	60050266	69270757[41]	-	-	R4510644	R4577864
23-123485-002[392]	70mm	60050321 / 60450455	60050320 / 60450454[39]	-	-	-	-	R4577868	R4577868
23-123495-002	2-7/8 "	R42R55250	R42R55250[37]	R4066365	R4090096[72]	-	-	R4510644	R4577864
23-123495-002	2-7/8 "	R42R55250	R42R55250[37]	R4066365	R4090096[72]	-	-	R4510644	R4577864
23-123485-002[392]	70mm	60050313	60050312	-	-	-	-	-	-
23-123485-002[392]	70mm	60050313	60050312	-	-	-	-	-	-
23-123486-002[268]	2-1/2 "	R424244X	R424244X[37]	60050266	69270757[41]	-	-	-	-
23-123486-002[268]	2-1/2 "	R424244X	R424244X[37]	60050266	69270757[41]	-	-	-	-
23-123485-002[392]	70mm	60050313	60050312	-	-	-	-	-	-
23-123485-002[392]	70mm	60050313	60050312	-	-	-	-	-	-
23-123486-002[268]	2-1/2 "	R424244X	R424244X[37]	60050266	69270757[41]	-	-	-	-
23-123486-002[268]	2-1/2 "	R424244X	R424244X[37]	60050266	69270757[41]	-	-	-	-
23-123495-002	2-1/2 "	R424244X	R424244X[37]	60050266	69270757[41]	-	-	-	-
23-123489-002[322]	2-1/2 "	R424244X	R424244X[37]	60050266	69270757[41]	-	-	-	-
23-123489-002[322]	2-7/8 "	R4255250	R4255250	R4066365	R4090096	-	-	-	-
23-123486-002[268]	2-1/2 "	R424244X	R424244X[37]	60050266	69270757[41]	-	-	-	-
23-123486-002[268]	2-1/2 "	R424244X	R424244X[37]	60050266	69270757[41]	-	-	-	-
23-123485-002[392]	2-1/2 "	R424244X	R424244X[37]	60050266	69270757[41]	-	-	-	-
23-123486-002[268]	2-1/2 "	R424244X	R424244X[37]	60050266	69270757[41]	-	-	-	-
23-123486-002[268]	2-1/2 "	R424244X	R424244X[37]	60050266	69270757[41]	-	-	-	-
23-123485-002[392]	70mm	60050313	60050312	-	-	-	-	-	-
23-123485-002[392]	70mm	60050313	60050312	-	-	-	-	-	-
23-123433-002	2-7/8 "	R4255250	R4255250	R4066365	R4090096	-	-	-	-
23-123486-002[268]	2-1/2 "	R424244X	R424244X[37]	60050266	69270757[41]	-	-	-	-
23-123486-002[268]	2-7/8 "	R42R55250	R42R55250[37]	R4066365	R4090096[72]	-	-	-	-
23-123486-002[268]	2-1/2 "	R424244X	R424244X[37]	60050266	69270757[41]	-	-	R4577868	R4577868

MAKE MODEL YEAR AXLE CODE AXLE WEIGHT	AXLE & BRK. TYPE	BRK. MFG.	BRAKE SIZE	FMSI	MERITOR DISC PAD OR BRAKE SHOE	MERITOR GUIDE PIN OR RETURN SPRING KIT	MERITOR CALIPER HWD. KIT OR RETURN SPRING KIT	MERITOR ADJUSTER KIT (LEFT WHEEL)	MERITOR ADJUSTER KIT (RIGHT WHEEL)
GMC / CHEV(Cont.)									
60, 6000 SERIES-20,000-27,500 lb. GVW (Cont.)									
1996									
	Fd	DN		7141 - D224	MD224[339]	69310693	60050153[277]	NR	NR
	Fd	DN		7141 - D224	MD224[339]	69310693	60050153[277]	NR	NR
	Fd	DN		7141 - D224	MD224[339]	69310693	60050153[277]	NR	NR
C6H042, C6H064 Topkick,Kodiak 8,000, 11,000lb. GVW	Fd	BX		7142 - D225	MD225	R40H5010	R40H5522	NR	NR
	Fd	BX		7142 - D225	MD225	R40H5010	R40H5522	NR	NR
	Fd	BX		7142 - D225	MD225	R40H5010	R40H5522	NR	NR
	Fd	BX		7142 - D225	MD225	R40H5010	R40H5522	NR	NR
C6H042, C6H064 Topkick,Kodiak 15,000, 19,000lb. GVW	Rd	DN		7141 - D224	MD224[339]	69310693	60050153[277]	NR	NR
	Rd	DN		7141 - D224	MD224[339]	69310693	60050153[277]	NR	NR
	Rd	DN		7141 - D224	MD224[339]	69310693	60050153[277]	NR	NR
	Rd	DN		7141 - D224	MD224[339]	69310693	60050153[277]	NR	NR
C6H042, C6H064 Topkick,Kodiak 19,000 lb. GVW	Rd	BX		7142 - D225	MD225	R40H5010	R40H5522	NR	NR
	Rd	BX		7142 - D225	MD225	R40H5010	R40H5522	NR	NR
	Rd	BX		7142 - D225	MD225	R40H5010	R40H5522	NR	NR
	Rd	BX		7142 - D225	MD225	R40H5010	R40H5522	NR	NR
1995 P6S042	Fd	DN		7141 - D224	MD224[339]	69310693	60050153[277]	NR	NR
	Rd	BX		7142 - D225	MD225	R40H5010	R40H5522	NR	NR
W6R042	Fm		400mm x 115mm	1421 - S616	R467412-21[343]	R407413	R407414	N/A	N/A
	Rm		410mm x 115mm	1420 - S615	R46741821[344]	R407417	N/A	N/A	N/A
	Rm		410mm x 115mm	1420 - S615	R46741821[344]	R407417	N/A	N/A	N/A
C6H042, C6H064 Topkick,Kodiak 8,000 lb.	Fd	DN		7141 - D224	MD224[339]	69310693	60050153[277]	NR	NR
	Fd	DN		7141 - D224	MD224[339]	69310693	60050153[277]	NR	NR
	Fd	DN		7141 - D224	MD224[339]	69310693	60050153[277]	NR	NR
	Fd	DN		7141 - D224	MD224[339]	69310693	60050153[277]	NR	NR
C6H042, C6H064 Topkick,Kodiak 8,000, 11,000lb. GVW	Fd	BX		7142 - D225	MD225	R40H5010	R40H5522	NR	NR
	Fd	BX		7142 - D225	MD225	R40H5010	R40H5522	NR	NR
	Fd	BX		7142 - D225	MD225	R40H5010	R40H5522	NR	NR
	Fd	BX		7142 - D225	MD225	R40H5010	R40H5522	NR	NR
C6H042, C6H064 Topkick,Kodiak 15,000, 19,000lb. GVW	Rd	DN		7141 - D224	MD224[339]	69310693	60050153[277]	NR	NR
	Rd	DN		7141 - D224	MD224[339]	69310693	60050153[277]	NR	NR
	Rd	DN		7141 - D224	MD224[339]	69310693	60050153[277]	NR	NR
	Rd	DN		7141 - D224	MD224[339]	69310693	60050153[277]	NR	NR
C6H042, C6H064 Topkick,Kodiak 19,000 lb. GVW	Rd	BX		7142 - D225	MD225	R40H5010	R40H5522	NR	NR
	Rd	BX		7142 - D225	MD225	R40H5010	R40H5522	NR	NR
	Rd	BX		7142 - D225	MD225	R40H5010	R40H5522	NR	NR
	Rd	BX		7142 - D225	MD225	R40H5010	R40H5522	NR	NR
1994 P6S042	Fd	DN		7141 - D224	MD224[339]	69310693	60050153[277]	NR	NR
	Rd	BX		7142 - D225	MD225	R40H5010	R40H5522	NR	NR
W6R042	Fm		400mm x 115mm	1421 - S616	R467412-21[343]	R407413	R407414	N/A	N/A
	Rm		410mm x 115mm	1420 - S615	R46741821[344]	R407417	N/A	N/A	N/A
	Rm		410mm x 115mm	1420 - S615	R46741821[344]	R407417	N/A	N/A	N/A
C6H042, C6H064 Topkick,Kodiak 8,000 lb.	Fd	DN		7141 - D224	MD224[339]	69310693	60050153[277]	NR	NR
	Fd	DN		7141 - D224	MD224[339]	69310693	60050153[277]	NR	NR
C6H042, C6H064 Topkick,Kodiak 8,000, 11,000lb. GVW	Fd	BX		7142 - D225	MD225	R40H5010	R40H5522	NR	NR

37 - Also available as a New unit
268 - 5 Stud, Hat Shape
329 - Forward
41 - Aluminum piston
277 - For Pad Retainer, Use 69160441
330 - Rearward
72 - Phenolic/Steel Face
307 - Power Brakes, Single System Hydrovac
339 - Use 69160441 for Disc Pad Retainer Clip

MERITOR DRUM OR ROTOR NO.	CALIPER OR CYLINDER BORE SIZE	MERITOR CALIPER OR WHEEL CYLINDER (LEFT)	MERITOR CALIPER OR WHEEL CYLINDER (RIGHT)	MERITOR CALIPER OR WHEEL CYLINDER REPAIR KIT	MERITOR CALIPER PISTON	MERITOR MASTER CYLINDER	MERITOR MASTER CYLINDER KIT	MERITOR BRAKE HOSE (LEFT)	MERITOR BRAKE HOSE (RIGHT)
GMC / CHEV(Cont.)									
60, 6000 SERIES-20,000-27,500 lb. GVW (Cont.)									
23-123486-002[268]	2-1/2 "	R424244X	R424244X[37]	60050266	69270757[41]	-	-	R4577868	R4577868
23-123486-002[268]	2-1/2 "	R424244X	R424244X[37]	60050266	69270757[41]	-	-	-	-
23-123486-002[268]	2-1/2 "	R424244X	R424244X[37]	60050266	69270757[41]	-	-	-	-
N/A	2-7/8 "	R42R55250	R42R55250[37]	R4066365	R4090096[72]	-	-	R4577868	R4577868
N/A	2-7/8 "	R42R55250	R42R55250[37]	R4066365	R4090096[72]	-	-	R4577868	R4577868
N/A	2-7/8 "	R42R55250	R42R55250[37]	R4066365	R4090096[72]	-	-	-	-
N/A	2-7/8 "	R42R55250	R42R55250[37]	R4066365	R4090096[72]	-	-	-	-
23-123486-002[268]	2-1/2 "	R424244X	R424244X[37]	60050266	69270757[41]	-	-	R4510644	R4577864
23-123486-002[268]	2-1/2 "	R424244X	R424244X[37]	60050266	69270757[41]	-	-	-	-
23-123486-002[268]	2-1/2 "	R424244X	R424244X[37]	60050266	69270757[41]	-	-	R4510644	R4577864
23-123486-002[268]	2-1/2 "	R424244X	R424244X[37]	60050266	69270757[41]	-	-	-	-
23-123495-002	2-7/8 "	R42R55250	R42R55250[37]	R4066365	R4090096[72]	-	-	-	-
23-123495-002	2-7/8 "	R42R55250	R42R55250[37]	R4066365	R4090096[72]	-	-	-	-
23-123495-002	2-7/8 "	R42R55250	R42R55250[37]	R4066365	R4090096[72]	-	-	R4510644	R4577864
23-123495-002	2-7/8 "	R42R55250	R42R55250[37]	R4066365	R4090096[72]	-	-	R4510644	R4577864
23-123486-002[268]	2-1/2 "	R424244X	R424244X[37]	60050266	69270757[41]	-	-	-	-
23-123486-002[268]	2-7/8 "	R42R55250	R42R55250[37]	R4066365	R4090096[72]	-	-	-	-
N/A	1-3/8 "	R417415	R417416	R417417	NR	R4110348[307]	R4110406	-	-
N/A	1-47/64 "	R417420	R417422[329]	R417424	NR	-	-	-	-
N/A	1-47/64 "	R417421	R417423[330]	R417424	NR	-	-	-	-
23-123486-002[268]	2-1/2 "	R424244X	R424244X[37]	60050266	69270757[41]	-	-	R4577868	R4577868
23-123486-002[268]	2-1/2 "	R424244X	R424244X[37]	60050266	69270757[41]	-	-	-	-
23-123486-002[268]	2-1/2 "	R424244X	R424244X[37]	60050266	69270757[41]	-	-	R4577868	R4577868
23-123486-002[268]	2-1/2 "	R424244X	R424244X[37]	60050266	69270757[41]	-	-	-	-
N/A	2-7/8 "	R42R55250	R42R55250[37]	R4066365	R4090096[72]	-	-	R4577868	R4577868
N/A	2-7/8 "	R42R55250	R42R55250[37]	R4066365	R4090096[72]	-	-	-	-
N/A	2-7/8 "	R42R55250	R42R55250[37]	R4066365	R4090096[72]	-	-	R4577868	R4577868
N/A	2-7/8 "	R42R55250	R42R55250[37]	R4066365	R4090096[72]	-	-	-	-
23-123486-002[268]	2-1/2 "	R424244X	R424244X[37]	60050266	69270757[41]	-	-	R4510644	R4577864
23-123486-002[268]	2-1/2 "	R424244X	R424244X[37]	60050266	69270757[41]	-	-	-	-
23-123486-002[268]	2-1/2 "	R424244X	R424244X[37]	60050266	69270757[41]	-	-	R4510644	R4577864
23-123486-002[268]	2-1/2 "	R424244X	R424244X[37]	60050266	69270757[41]	-	-	-	-
23-123495-002	2-7/8 "	R42R55250	R42R55250[37]	R4066365	R4090096[72]	-	-	R4510644	R4577864
23-123495-002	2-7/8 "	R42R55250	R42R55250[37]	R4066365	R4090096[72]	-	-	-	-
23-123495-002	2-7/8 "	R42R55250	R42R55250[37]	R4066365	R4090096[72]	-	-	R4510644	R4577864
23-123495-002	2-7/8 "	R42R55250	R42R55250[37]	R4066365	R4090096[72]	-	-	-	-
23-123486-002[268]	2-1/2 "	R424244X	R424244X[37]	60050266	69270757[41]	-	-	-	-
23-123486-002[268]	2-7/8 "	R42R55250	R42R55250[37]	R4066365	R4090096[72]	-	-	-	-
N/A	1-3/8 "	R417415	R417416	R417417	NR	R4110348[307]	R4110406	-	-
N/A	1-47/64 "	R417420	R417422[329]	R417424	NR	-	-	-	-
N/A	1-47/64 "	R417421	R417423[330]	R417424	NR	-	-	-	-
23-123486-002[268]	2-1/2 "	R424244X	R424244X[37]	60050266	69270757[41]	-	-	R4577868	R4577868
23-123486-002[268]	2-1/2 "	R424244X	R424244X[37]	60050266	69270757[41]	-	-	R4577868	R4577868
N/A	2-7/8 "	R42R55250	R42R55250[37]	R4066365	R4090096[72]	-	-	R4577868	R4577868

343 - Use E-7409 for Lining and Rivet Set

344 - Use E-7411 for Lining and Rivet Set

MAKE MODEL YEAR AXLE CODE AXLE WEIGHT	AXLE & BRK. TYPE	BRK. MFG.	BRAKE SIZE	FMSI	MERITOR DISC PAD OR BRAKE SHOE	MERITOR GUIDE PIN OR RETURN SPRING KIT	MERITOR CALIPER HWD. KIT OR RETURN SPRING KIT	MERITOR ADJUSTER KIT (LEFT WHEEL)	MERITOR ADJUSTER KIT (RIGHT WHEEL)
GMC / CHEV(Cont.)									
60, 6000 SERIES-20,000-27,500 lb. GVW (Cont.)									
1994	Fd	BX		7142 - D225	MD225	R40H5010	R40H5522	NR	NR
C6H042, C6H064 Topkick,Kodiak 15,000, 19,000lb. GVW	Rd Rd	DN DN		7141 - D224 7141 - D224	MD224[339] MD224[339]	69310693 69310693	60050153[277] 60050153[277]	NR NR	NR NR
C6H042, C6H064 Topkick,Kodiak 19,000 lb. GVW	Rd Rd	BX BX		7142 - D225 7142 - D225	MD225 MD225	R40H5010 R40H5010	R40H5522 R40H5522	NR NR	NR NR
1993 P6S042	Fd	DN		7141 - D224	MD224[339]	69310693	60050153[277]	NR	NR
	Rd	BX		7142 - D225	MD225	R40H5010	R40H5522	NR	NR
W6R042	Fm		400mm x 115mm	1421 - S616	R467412-21[343]	R407413	R407414	N/A	N/A
	Rm		410mm x 115mm	1420 - S615	R46741821[344]	R407417	N/A	N/A	N/A
	Rm		410mm x 115mm	1420 - S615	R46741821[344]	R407417	N/A	N/A	N/A
C6H042, C6H064 Topkick,Kodiak 8,000 lb.	Fd Fd	DN DN		7141 - D224 7141 - D224	MD224[339] MD224[339]	69310693 69310693	60050153[277] 60050153[277]	NR NR	NR NR
C6H042, C6H064 Topkick,Kodiak 8,000, 11,000lb. GVW	Fd Fd	BX BX		7142 - D225 7142 - D225	MD225 MD225	R40H5010 R40H5010	R40H5522 R40H5522	NR NR	NR NR
C6H042, C6H064 Topkick,Kodiak 15,000, 19,000lb. GVW	Rd Rd	DN DN		7141 - D224 7141 - D224	MD224[339] MD224[339]	69310693 69310693	60050153[277] 60050153[277]	NR NR	NR NR
C6H042, C6H064 Topkick,Kodiak 19,000 lb. GVW	Rd Rd	BX BX		7142 - D225 7142 - D225	MD225 MD225	R40H5010 R40H5010	R40H5522 R40H5522	NR NR	NR NR
1992 W6R042	Fm		400mm x 115mm	1421 - S616	R467412-21[343]	R407413	R407414	N/A	N/A
	Rm		410mm x 115mm	1420 - S615	R46741821[344]	R407417	N/A	N/A	N/A
	Rm		410mm x 115mm	1420 - S615	R46741821[344]	R407417	N/A	N/A	N/A
C6H042, C6H064 Topkick,Kodiak 5,000 lb.	Fa Fa	GM GM	14 " x 2-1/2 " 14 " x 2-1/2 "	2039 - 299 2039 - 299	N/A N/A	R40H599 R40H599	R40H9206 R40H9206	R40H3500 R40H3500	R40H3501 R40H3501
B6P042 School Bus 7,000 lb.	Fd Fd Fd	DN DN DN		7141 - D224 7141 - D224 7141 - D224	MD224[339] MD224[339] MD224[339]	69310693 69310693 69310693	60050153[277] 60050153[277] 60050153[277]	NR NR NR	NR NR NR
C6H042, C6H064 Topkick,Kodiak 8,000 lb.	Fd Fd	DN DN		7141 - D224 7141 - D224	MD224[339] MD224[339]	69310693 69310693	60050153[277] 60050153[277]	NR NR	NR NR
C6H042, C6H064 Topkick,Kodiak 8,000, 11,000lb. GVW	Fd Fd	BX BX		7142 - D225 7142 - D225	MD225 MD225	R40H5010 R40H5010	R40H5522 R40H5522	NR NR	NR NR
B6P042 School Bus 9,000 lb.	Fd	BX		7142 - D225	MD225	R40H5010	R40H5522	NR	NR
C6H042, C6H064 Topkick,Kodiak 9,000 lb.	Fd	BX		7142 - D225	MD225	R40H5010	R40H5522	NR	NR
B6P042 School Bus 15,000 lb. GVW	Rd Rd	DN DN		7141 - D224 7141 - D224	MD224[339] MD224[339]	69310693 69310693	60050153[277] 60050153[277]	NR NR	NR NR
C6H042, C6H064 Topkick,Kodiak 15,000, 19,000lb. GVW	Rd Rd	DN DN		7141 - D224 7141 - D224	MD224[339] MD224[339]	69310693 69310693	60050153[277] 60050153[277]	NR NR	NR NR

37 - Also available as a New unit
266 - 10 Stud, Hat Shaped
287 - Budd rotor with 6 studs
41 - Aluminum piston
268 - 5 Stud, Hat Shape
288 - Dayton Rotor with 6 Studs
72 - Phenolic/Steel Face
277 - For Pad Retainer, Use 69160441
307 - Power Brakes, Single System Hydrovac

MERITOR DRUM OR ROTOR NO.	CALIPER OR CYLINDER BORE SIZE	MERITOR CALIPER OR WHEEL CYLINDER (LEFT)	MERITOR CALIPER OR WHEEL CYLINDER (RIGHT)	MERITOR CALIPER OR WHEEL CYLINDER REPAIR KIT	MERITOR CALIPER PISTON	MERITOR MASTER CYLINDER	MERITOR MASTER CYLINDER KIT	MERITOR BRAKE HOSE (LEFT)	MERITOR BRAKE HOSE (RIGHT)
GMC / CHEV(Cont.)									
60, 6000 SERIES-20,000-27,500 lb. GVW (Cont.)									
N/A	2-7/8 "	R42R55250	R42R55250[37]	R4066365	R4090096[72]	-	-	R4577868	R4577868
23-123486-002[268]	2-1/2 "	R424244X	R424244X[37]	60050266	69270757[41]	-	-	R4510644	R4577864
23-123486-002[268]	2-1/2 "	R424244X	R424244X[37]	60050266	69270757[41]	-	-	R4510644	R4577864
23-123495-002	2-7/8 "	R42R55250	R42R55250[37]	R4066365	R4090096[72]	-	-	R4510644	R4577864
23-123495-002	2-7/8 "	R42R55250	R42R55250[37]	R4066365	R4090096[72]	-	-	R4510644	R4577864
23-123486-002[268]	2-1/2 "	R424244X	R424244X[37]	60050266	69270757[41]	-	-	-	-
23-123486-002[268]	2-7/8 "	R42R55250	R42R55250[37]	R4066365	R4090096[72]	-	-	-	-
N/A	1-3/8 "	R417415	R417416	R417417	NR	R4110348[307]	R4110406	-	-
N/A	1-47/64 "	R417420	R417422[329]	R417424	NR	-	-	-	-
N/A	1-47/64 "	R417421	R417423[330]	R417424	NR	-	-	-	-
23-123486-002[268]	2-1/2 "	R424244X	R424244X[37]	60050266	69270757[41]	-	-	-	-
23-123486-002[268]	2-1/2 "	R424244X	R424244X[37]	60050266	69270757[41]	-	-	-	-
N/A	2-7/8 "	R42R55250	R42R55250[37]	R4066365	R4090096[72]	-	-	-	-
N/A	2-7/8 "	R42R55250	R42R55250[37]	R4066365	R4090096[72]	-	-	-	-
23-123486-002[268]	2-1/2 "	R424244X	R424244X[37]	60050266	69270757[41]	-	-	-	-
23-123486-002[268]	2-1/2 "	R424244X	R424244X[37]	60050266	69270757[41]	-	-	-	-
23-123495-002	2-7/8 "	R42R55250	R42R55250[37]	R4066365	R4090096[72]	-	-	-	-
23-123495-002	2-7/8 "	R42R55250	R42R55250[37]	R4066365	R4090096[72]	-	-	-	-
N/A	1-3/8 "	R417415	R417416	R417417	NR	R4110348[307]	R4110406	-	-
N/A	1-47/64 "	R417420	R417422[329]	R417424	NR	-	-	-	-
N/A	1-47/64 "	R417421	R417423[330]	R417424	NR	-	-	-	-
N/A	1-1/4 "	R4133320	R4133321	R415194	NR	-	-	-	-
N/A	1-1/8 "	R4133320	R4133321	R415194	NR	-	-	-	-
R44141583[287]	2-1/2 "	R424244X	R424244X[37]	60050266	69270757[41]	-	-	-	-
23-123486-002[268]	2-1/2 "	R424244X	R424244X[37]	60050266	69270757[41]	-	-	-	-
23-123468-002[288]	2-1/2 "	R424244X	R424244X[37]	60050266	69270757[41]	-	-	-	-
23-123486-002[268]	2-1/2 "	R424244X	R424244X[37]	60050266	69270757[41]	-	-	-	-
23-123486-002[268]	2-1/2 "	R424244X	R424244X[37]	60050266	69270757[41]	-	-	-	-
N/A	2-7/8 "	R42R55250	R42R55250[37]	R4066365	R4090096[72]	-	-	-	-
N/A	2-7/8 "	R42R55250	R42R55250[37]	R4066365	R4090096[72]	-	-	-	-
23-122729-002[266]	2-7/8 "	R42R55250	R42R55250[37]	R4066365	R4090096[72]	-	-	-	-
23-122729-002[266]	2-7/8 "	R42R55250	R42R55250[37]	R4066365	R4090096[72]	-	-	-	-
23-123468-002[288]	2-1/2 "	R424244X	R424244X[37]	60050266	69270757[41]	-	-	-	-
23-123486-002[268]	2-1/2 "	R424244X	R424244X[37]	60050266	69270757[41]	-	-	-	-
23-123486-002[268]	2-1/2 "	R424244X	R424244X[37]	60050266	69270757[41]	-	-	-	-
23-123486-002[268]	2-1/2 "	R424244X	R424244X[37]	60050266	69270757[41]	-	-	-	-

329 - Forward
330 - Rearward
339 - Use 69160441 for Disc Pad Retainer Clip
343 - Use E-7409 for Lining and Rivet Set
344 - Use E-7411 for Lining and Rivet Set

MAKE MODEL YEAR AXLE CODE AXLE WEIGHT	AXLE & BRK. TYPE	BRK. MFG.	BRAKE SIZE	FMSI	MERITOR DISC PAD OR BRAKE SHOE	MERITOR GUIDE PIN OR RETURN SPRING KIT	MERITOR CALIPER HWD. KIT OR RETURN SPRING KIT	MERITOR ADJUSTER KIT (LEFT WHEEL)	MERITOR ADJUSTER KIT (RIGHT WHEEL)
GMC / CHEV(Cont.)									
60, 6000 SERIES-20,000-27,500 lb. GVW									
1992 B6P042 School Bus 16,000, 17,000, 19,000lb. GVW	Rd	BX		7142 - D225	MD225	R40H5010	R40H5522	NR	NR
C6H042, C6H064 Topkick,Kodiak 19,000 lb. GVW	Rd Rd	BX BX		7142 - D225 7142 - D225	MD225 MD225	R40H5010 R40H5010	R40H5522 R40H5522	NR NR	NR NR
1991 W6R042	Fm		400mm x 115mm	1421 - S616	R467412-21[343]	R407413	R407414	N/A	N/A
	Rm		410mm x 115mm	1420 - S615	R46741821[344]	R407417	N/A	N/A	N/A
	Rm		410mm x 115mm	1420 - S615	R46741821[344]	R407417	N/A	N/A	N/A
5,000 lb.	Fa	GM	14 " x 2-1/2 "	2039 - 299	N/A	R40H599	R40H9206	R40H3500	R40H3501
	Fa	GM	14 " x 2-1/2 "	2039 - 299	N/A	R40H599	R40H9206	R40H3500	R40H3501
B6P042 School Bus 7,000 lb.	Fd	DN		7141 - D224	MD224[339]	69310693	60050153[277]	NR	NR
	Fd	DN		7141 - D224	MD224[339]	69310693	60050153[277]	NR	NR
	Fd	DN		7141 - D224	MD224[339]	69310693	60050153[277]	NR	NR
C6H042, C6H064 Topkick,Kodiak 8,000 lb.	Fd	DN		7141 - D224	MD224[339]	69310693	60050153[277]	NR	NR
	Fd	DN		7141 - D224	MD224[339]	69310693	60050153[277]	NR	NR
C6H042, C6H064 Topkick,Kodiak 8,000, 11,000lb. GVW	Fd	BX		7142 - D225	MD225	R40H5010	R40H5522	NR	NR
	Fd	BX		7142 - D225	MD225	R40H5010	R40H5522	NR	NR
B6P042 School Bus 9,000 lb.	Fd	BX		7142 - D225	MD225	R40H5010	R40H5522	NR	NR
B6P042 School Bus 15,000 lb. GVW	Rd	DN		7141 - D224	MD224[339]	69310693	60050153[277]	NR	NR
	Rd	DN		7141 - D224	MD224[339]	69310693	60050153[277]	NR	NR
C6H042, C6H064 Topkick,Kodiak 15,000, 19,000lb. GVW	Rd	DN		7141 - D224	MD224[339]	69310693	60050153[277]	NR	NR
	Rd	DN		7141 - D224	MD224[339]	69310693	60050153[277]	NR	NR
B6P042 School Bus 16,000, 17,000, 19,000lb. GVW	Rd	BX		7142 - D225	MD225	R40H5010	R40H5522	NR	NR
C6H042, C6H064 Topkick,Kodiak 19,000 lb. GVW	Rd	BX		7142 - D225	MD225	R40H5010	R40H5522	NR	NR
	Rd	BX		7142 - D225	MD225	R40H5010	R40H5522	NR	NR
1990 P6T042	Fd	DN		7141 - D224	MD224[339]	69310693	60050153[277]	NR	NR
W6R042	Fm		400mm x 115mm	1421 - S616	R467412-21[343]	R407413	R407414	N/A	N/A
	Rm		410mm x 115mm	1420 - S615	R46741821[344]	R407417	N/A	N/A	N/A
	Rm		410mm x 115mm	1420 - S615	R46741821[344]	R407417	N/A	N/A	N/A
5,000 lb.	Fa	GM	14 " x 2-1/2 "	2039 - 299	N/A	R40H599	R40H9206	R40H3500	R40H3501
	Fa	GM	14 " x 2-1/2 "	2039 - 299	N/A	R40H599	R40H9206	R40H3500	R40H3501
C6D042, C6D064 Conventional 5,000, 7,000lb. GVW	Fd	DN		7141 - D224	MD224[339]	69310693	60050153[277]	NR	NR
	Fd	DN		7141 - D224	MD224[339]	69310693	60050153[277]	NR	NR
P6T042 5,000, 7,000lb. GVW	Fd	BX		7815 - D380	MD184	R40H5010	R40H5519	NR	NR
B6P042 School Bus 7,000 lb.	Fd	DN		7141 - D224	MD224[339]	69310693	60050153[277]	NR	NR
	Fd	DN		7141 - D224	MD224[339]	69310693	60050153[277]	NR	NR
	Fd	DN		7141 - D224	MD224[339]	69310693	60050153[277]	NR	NR
B6P042 School Bus 9,000 lb.	Fd	BX		7142 - D225	MD225	R40H5010	R40H5522	NR	NR
C6D042, C6D064 Conventional 9,000, 12,000lb. GVW	Fd	BX		7142 - D225	MD225	R40H5010	R40H5522	NR	NR

37 - Also available as a New unit
266 - 10 Stud, Hat Shaped
286 - Budd Rotor with 10 Studs
41 - Aluminum piston
268 - 5 Stud, Hat Shape
287 - Budd rotor with 6 studs
72 - Phenolic/Steel Face
277 - For Pad Retainer, Use 69160441
288 - Dayton Rotor with 6 Studs

MERITOR DRUM OR ROTOR NO.	CALIPER OR CYLINDER BORE SIZE	MERITOR CALIPER OR WHEEL CYLINDER (LEFT)	MERITOR CALIPER OR WHEEL CYLINDER (RIGHT)	MERITOR CALIPER OR WHEEL CYLINDER REPAIR KIT	MERITOR CALIPER PISTON	MERITOR MASTER CYLINDER	MERITOR MASTER CYLINDER KIT	MERITOR BRAKE HOSE (LEFT)	MERITOR BRAKE HOSE (RIGHT)
GMC / CHEV(Cont.)									
60, 6000 SERIES-20,000-27,500 lb. GVW									
23-122729-002[266]	2-7/8 "	R42R55250	R42R55250[37]	R4066365	R4090096[72]	-	-	-	-
23-123495-002	2-7/8 "	R42R55250	R42R55250[37]	R4066365	R4090096[72]	-	-	-	-
23-123495-002	2-7/8 "	R42R55250	R42R55250[37]	R4066365	R4090096[72]	-	-	-	-
N/A	1-3/8 "	R417415	R417416	R417417	NR	R4110348[307]	R4110406	-	-
N/A	1-47/64 "	R417421	R417423[330]	R417424	NR	-	-	-	-
N/A	1-47/64 "	R417420	R417422[329]	R417424	NR	-	-	-	-
N/A	1-1/8 "	R4133320	R4133321	R415194	NR	-	-	-	-
N/A	1-1/4 "	R4133320	R4133321	R415194	NR	-	-	-	-
R44141583[287]	2-1/2 "	R424244X	R424244X[37]	60050266	69270757[41]	-	-	-	-
23-123486-002[268]	2-1/2 "	R424244X	R424244X[37]	60050266	69270757[41]	-	-	-	-
23-123468-002[288]	2-1/2 "	R424244X	R424244X[37]	60050266	69270757[41]	-	-	-	-
23-123486-002[268]	2-1/2 "	R424244X	R424244X[37]	60050266	69270757[41]	-	-	-	-
23-123486-002[268]	2-1/2 "	R424244X	R424244X[37]	60050266	69270757[41]	-	-	-	-
N/A	2-7/8 "	R42R55250	R42R55250[37]	R4066365	R4090096[72]	-	-	-	-
N/A	2-7/8 "	R42R55250	R42R55250[37]	R4066365	R4090096[72]	-	-	-	-
23-122729-002[266]	2-7/8 "	R42R55250	R42R55250[37]	R4066365	R4090096[72]	-	-	-	-
23-123468-002[288]	2-1/2 "	R424244X	R424244X[37]	60050266	69270757[41]	-	-	-	-
23-123486-002[268]	2-1/2 "	R424244X	R424244X[37]	60050266	69270757[41]	-	-	-	-
23-123486-002[268]	2-1/2 "	R424244X	R424244X[37]	60050266	69270757[41]	-	-	-	-
23-123486-002[268]	2-1/2 "	R424244X	R424244X[37]	60050266	69270757[41]	-	-	-	-
23-122729-002[266]	2-7/8 "	R42R55250	R42R55250[37]	R4066365	R4090096[72]	-	-	-	-
23-123495-002	2-7/8 "	R42R55250	R42R55250[37]	R4066365	R4090096[72]	-	-	-	-
23-123495-002	2-7/8 "	R42R55250	R42R55250[37]	R4066365	R4090096[72]	-	-	-	-
N/A[286]	2-1/2 "	R424244X	R424244X[37]	60050266	69270757[41]	-	-	-	-
N/A	1-3/8 "	R417415	R417416	R417417	NR	R4110348[307]	R4110406	-	-
N/A	1-47/64 "	R417421	R417423[330]	R417424	NR	-	-	-	-
N/A	1-47/64 "	R417420	R417422[329]	R417424	NR	-	-	-	-
N/A	1-1/4 "	R4133320	R4133321	R415194	NR	-	-	-	-
N/A	1-1/8 "	R4133320	R4133321	R415194	NR	-	-	-	-
23-123486-002[268]	2-1/2 "	R424244X	R424244X[37]	60050266	69270757[41]	-	-	-	-
R44141583[287]	2-1/2 "	R424244X	R424244X[37]	60050266	69270757[41]	-	-	-	-
N/A	2-19/32 "	R42R55314	R42R55314[37]	R40107771	R4090100P[72]	-	-	-	-
23-123486-002[268]	2-1/2 "	R424244X	R424244X[37]	60050266	69270757[41]	-	-	-	-
23-123468-002[288]	2-1/2 "	R424244X	R424244X[37]	60050266	69270757[41]	-	-	-	-
R44141583[287]	2-1/2 "	R424244X	R424244X[37]	60050266	69270757[41]	-	-	-	-
23-122729-002[266]	2-7/8 "	R42R55250	R42R55250[37]	R4066365	R4090096[72]	-	-	-	-
23-122729-002[266]	2-7/8 "	R42R55250	R42R55250[37]	R4066365	R4090096[72]	-	-	-	-

307 - Power Brakes, Single System Hydrovac
329 - Forward
330 - Rearward
339 - Use 69160441 for Disc Pad Retainer Clip
343 - Use E-7409 for Lining and Rivet Set
344 - Use E-7411 for Lining and Rivet Set

MAKE MODEL YEAR AXLE CODE AXLE WEIGHT	AXLE & BRK. TYPE	BRK. MFG.	BRAKE SIZE	FMSI	MERITOR DISC PAD OR BRAKE SHOE	MERITOR GUIDE PIN OR RETURN SPRING KIT	MERITOR CALIPER HWD. KIT OR RETURN SPRING KIT	MERITOR ADJUSTER KIT (LEFT WHEEL)	MERITOR ADJUSTER KIT (RIGHT WHEEL)
GMC / CHEV(Cont.)									
60, 6000 SERIES-20,000-27,500 lb. GVW (Cont.)									
1990 B6P042 School Bus 15,000 lb. GVW	Rd Rd	DN DN		7141 - D224 7141 - D224	MD224[339] MD224[339]	69310693 69310693	60050153[277] 60050153[277]	NR NR	NR NR
C6D042, C6D064 Conventional 15,000 lb. GVW	Rd Rd	BX DN		7142 - D225 7141 - D224	MD225 MD224[339]	R40H5010 69310693	R40H5522 60050153[277]	NR NR	NR NR
P6T042 15,000 lb. GVW	Rd	DN		7141 - D224	MD224[339]	69310693	60050153[277]	NR	NR
B6P042 School Bus 16,000, 17,000, 19,000lb. GVW	Rd	BX		7142 - D225	MD225	R40H5010	R40H5522	NR	NR
C6D042, C6D064 Conventional 17,000, 19,000lb. GVW	Rd	BX		7142 - D225	MD225	R40H5010	R40H5522	NR	NR
1989 C6D042, C6D064 Conventional	Rd Rd Rd	BX BX DN		7108 - D184 7142 - D225 7141 - D224	MD184 MD225 MD224[339]	R40H5010 R40H5010 69310693	R40H5519 R40H5522 60050153[277]	NR NR NR	NR NR NR
W6R042	Fm		400mm x 115mm	1421 - S616	R467412-21[343]	R407413	R407414	N/A	N/A
	Rm Rm		410mm x 115mm 410mm x 115mm	1420 - S615 1420 - S615	R46741821[344] R46741821[344]	R407417 R407417	N/A N/A	N/A N/A	N/A N/A
5,000 lb.	Fa Fa	GM GM	14 " x 2-1/2 " 14 " x 2-1/2 "	2039 - 299 2039 - 299	N/A N/A	R40H599 R40H599	R40H9206 R40H9206	R40H3500 R40H3500	R40H3501 R40H3501
C6D042, C6D064 Conventional 5,000 lb.	Fd Fd Fd	BX BX DN		7108 - D184 7142 - D225 7141 - D224	MD184 MD225 MD224[339]	R40H5010 R40H5010 69310693	R40H5519 R40H5522 60050153[277]	NR NR NR	NR NR NR
C6D042, C6D064 Conventional 5,000, 7,000lb. GVW	Fd Fd Fd Fd Fd Fd Fd Fd Fd Fd Fd Fd Fd Fd Fd	BX BX BX BX BX BX BX BX BX BX BX DN DN DN DN		7142 - D225 7108 - D184 7108 - D184 7142 - D225 7108 - D184 7108 - D184 7108 - D184 7142 - D225 7142 - D225 7142 - D225 7141 - D224 7141 - D224 7141 - D224 7141 - D224	MD225 MD184 MD184 MD225 MD184 MD184 MD184 MD225 MD225 MD225 MD224[339] MD224[339] MD224[339] MD224[339]	R40H5010 R40H5010 R40H5010 R40H5010 R40H5010 R40H5010 R40H5010 R40H5010 R40H5010 R40H5010 69310693 69310693 69310693 69310693	R40H5522 R40H5519 R40H5519 R40H5522 R40H5519 R40H5519 R40H5519 R40H5522 R40H5522 R40H5522 60050153[277] 60050153[277] 60050153[277] 60050153[277]	NR NR NR NR NR NR NR NR NR NR NR NR NR NR	NR NR NR NR NR NR NR NR NR NR NR NR NR NR
P6T042 5,000, 7,000lb. GVW	Fd Fd	BX DN		7815 - D380 7141 - D224	MD184 MD224[339]	R40H5010 69310693	R40H5519 60050153[277]	NR NR	NR NR
B6P042 School Bus 7,000 lb.	Fd Fd Fd	DN DN DN		7141 - D224 7141 - D224 7141 - D224	MD224[339] MD224[339] MD224[339]	69310693 69310693 69310693	60050153[277] 60050153[277] 60050153[277]	NR NR NR	NR NR NR
B6P042 School Bus 9,000 lb.	Fd	BX		7142 - D225	MD225	R40H5010	R40H5522	NR	NR
B6P042 School Bus 15,000 lb. GVW	Rd Rd	DN DN		7141 - D224 7141 - D224	MD224[339] MD224[339]	69310693 69310693	60050153[277] 60050153[277]	NR NR	NR NR
C6D042, C6D064 Conventional 15,000 lb. GVW	Rd Rd Rd	BX BX DN		7142 - D225 7108 - D184 7141 - D224	MD225 MD184 MD224[339]	R40H5010 R40H5010 69310693	R40H5522 R40H5519 60050153[277]	NR NR NR	NR NR NR
P6T042 15,000 lb. GVW	Rd	DN		7141 - D224	MD224[339]	69310693	60050153[277]	NR	NR

32 - For rotor only use R44141480
72 - Phenolic/Steel Face
277 - For Pad Retainer, Use 69160441
37 - Also available as a New unit
266 - 10 Stud, Hat Shaped
286 - Budd Rotor with 10 Studs
41 - Aluminum piston
268 - 5 Stud, Hat Shape
287 - Budd rotor with 6 studs

MERITOR DRUM OR ROTOR NO.	CALIPER OR CYLINDER BORE SIZE	MERITOR CALIPER OR WHEEL CYLINDER (LEFT)	MERITOR CALIPER OR WHEEL CYLINDER (RIGHT)	MERITOR CALIPER OR WHEEL CYLINDER REPAIR KIT	MERITOR CALIPER PISTON	MERITOR MASTER CYLINDER	MERITOR MASTER CYLINDER KIT	MERITOR BRAKE HOSE (LEFT)	MERITOR BRAKE HOSE (RIGHT)
GMC / CHEV(Cont.)									
60, 6000 SERIES-20,000-27,500 lb. GVW (Cont.)									
23-123468-002[288]	2-1/2 "	R424244X	R424244X[37]	60050266	69270757[41]	-	-	-	-
23-123486-002[268]	2-1/2 "	R424244X	R424244X[37]	60050266	69270757[41]	-	-	-	-
23-123486-002[268]	2-7/8 "	R42R55250	R42R55250[37]	R4066365	R4090096[72]	-	-	-	-
23-123468-002[288]	2-1/2 "	R424244X	R424244X[37]	60050266	69270757[41]	-	-	-	-
23-123486-002[268]	2-1/2 "	R424244X	R424244X[37]	60050266	69270757[41]	-	-	-	-
23-122729-002[266]	2-7/8 "	R42R55250	R42R55250[37]	R4066365	R4090096[72]	-	-	-	-
23-122729-002[266]	2-7/8 "	R42R55250	R42R55250[37]	R4066365	R4090096[72]	-	-	-	-
23-123468-002[288]	2-19/32 "	R42R55314	R42R55314[37]	R40107771	R4090100P[72]	-	-	-	-
23-123468-002[288]	2-7/8 "	R42R55250	R42R55250[37]	R4066365	R4090096[72]	-	-	-	-
23-123468-002[288]	2-1/2 "	R424244X	R424244X[37]	60050266	69270757[41]	-	-	-	-
N/A	1-3/8 "	R417415	R417416	R417417	NR	R4110348[307]	R4110406	-	-
N/A	1-47/64 "	R417420	R417422[329]	R417424	NR	-	-	-	-
N/A	1-47/64 "	R417421	R417423[330]	R417424	NR	-	-	-	-
N/A	1-1/8 "	R4133320	R4133321	R415194	NR	-	-	-	-
N/A	1-1/4 "	R4133320	R4133321	R415194	NR	-	-	-	-
23-123046-002	2-19/32 "	R42R55314	R42R55314[37]	R40107771	R4090100P[72]	-	-	-	-
23-123046-002	2-7/8 "	R42R55250	R42R55250[37]	R4066365	R4090096[72]	-	-	-	-
23-123046-002	2-1/2 "	R424244X	R424244X[37]	60050266	69270757[41]	-	-	-	-
R44141480[32]	2-7/8 "	R42R55250	R42R55250[37]	R4066365	R4090096[72]	-	-	-	-
N/A[286]	2-19/32 "	R42R55314	R42R55314[37]	R40107771	R4090100P[72]	-	-	-	-
R44141583[287]	2-19/32 "	R42R55314	R42R55314[37]	R40107771	R4090100P[72]	-	-	-	-
23-123468-002[288]	2-7/8 "	R42R55250	R42R55250[37]	R4066365	R4090096[72]	-	-	-	-
R44141480[32]	3-3/8 "	R42R55314	R42R55314[37]	R40107771	R4090100P[72]	-	-	-	-
23-123041-002	2-19/32 "	R42R55314	R42R55314[37]	R40107771	R4090100P[72]	-	-	-	-
23-123468-002[288]	2-19/32 "	R42R55314	R42R55314[37]	R40107771	R4090100P[72]	-	-	-	-
R44141583[287]	2-7/8 "	R42R55250	R42R55250[37]	R4066365	R4090096[72]	-	-	-	-
N/A[286]	2-7/8 "	R42R55250	R42R55250[37]	R4066365	R4090096[72]	-	-	-	-
23-123041-002	2-7/8 "	R42R55250	R42R55250[37]	R4066365	R4090096[72]	-	-	-	-
23-123468-002[288]	2-1/2 "	R424244X	R424244X[37]	60050266	69270757[41]	-	-	-	-
N/A[286]	2-1/2 "	R424244X	R424244X[37]	60050266	69270757[41]	-	-	-	-
R44141480[32]	2-1/2 "	R424244X	R424244X[37]	60050266	69270757[41]	-	-	-	-
R44141583[287]	2-1/2 "	R424244X	R424244X[37]	60050266	69270757[41]	-	-	-	-
N/A	2-19/32 "	R42R55314	R42R55314[37]	R40107771	R4090100P[72]	-	-	-	-
N/A	2-1/2 "	R424244X	R424244X[37]	60050266	69270757[41]	-	-	-	-
R44141583[287]	2-1/2 "	R424244X	R424244X[37]	60050266	69270757[41]	-	-	-	-
23-123486-002[268]	2-1/2 "	R424244X	R424244X[37]	60050266	69270757[41]	-	-	-	-
23-123468-002[288]	2-1/2 "	R424244X	R424244X[37]	60050266	69270757[41]	-	-	-	-
23-122729-002[266]	2-7/8 "	R42R55250	R42R55250[37]	R4066365	R4090096[72]	-	-	-	-
23-123486-002[268]	2-1/2 "	R424244X	R424244X[37]	60050266	69270757[41]	-	-	-	-
23-123468-002[288]	2-1/2 "	R424244X	R424244X[37]	60050266	69270757[41]	-	-	-	-
23-123486-002[268]	2-7/8 "	R42R55250	R42R55250[37]	R4066365	R4090096[72]	-	-	-	-
23-123486-002[268]	2-19/32 "	R42R55314	R42R55314[37]	R40107771	R4090100P[72]	-	-	-	-
23-123486-002[268]	2-1/2 "	R424244X	R424244X[37]	60050266	69270757[41]	-	-	-	-
23-123486-002[268]	2-1/2 "	R424244X	R424244X[37]	60050266	69270757[41]	-	-	-	-

288 - Dayton Rotor with 6 Studs
307 - Power Brakes, Single System Hydrovac
329 - Forward
330 - Rearward
339 - Use 69160441 for Disc Pad Retainer Clip
343 - Use E-7409 for Lining and Rivet Set
344 - Use E-7411 for Lining and Rivet Set

MAKE MODEL YEAR AXLE CODE AXLE WEIGHT	AXLE & BRK. TYPE	BRK. MFG.	BRAKE SIZE	FMSI	MERITOR DISC PAD OR BRAKE SHOE	MERITOR GUIDE PIN OR RETURN SPRING KIT	MERITOR CALIPER HWD. KIT OR RETURN SPRING KIT	MERITOR ADJUSTER KIT (LEFT WHEEL)	MERITOR ADJUSTER KIT (RIGHT WHEEL)
GMC / CHEV(Cont.)									
60, 6000 SERIES-20,000-27,500 lb. GVW (Cont.)									
1989 B6P042 School Bus 16,000, 17,000, 19,000lb. GVW	Rd	BX		7142 - D225	MD225	R40H5010	R40H5522	NR	NR
C6D042, C6D064 Conventional 17,500 lb. GVW	Rd	BX		7108 - D184	MD184	R40H5010	R40H5519	NR	NR
	Rd	BX		7142 - D225	MD225	R40H5010	R40H5522	NR	NR
	Rd	DN		7141 - D224	MD224[339]	69310693	60050153[277]	NR	NR
C6D042, C6D064 Conventional 19,000 lb. GVW	Rd	BX		7108 - D184	MD184	R40H5010	R40H5519	NR	NR
	Rd	BX		7142 - D225	MD225	R40H5010	R40H5522	NR	NR
	Rd	DN		7141 - D224	MD224[339]	69310693	60050153[277]	NR	NR
C6D042, C6D064 Conventional 21,000, 23,000lb. GVW	Rd	BX		7142 - D225	MD225	R40H5010	R40H5522	NR	NR
	Rd	BX		7108 - D184	MD184	R40H5010	R40H5519	NR	NR
	Rd	DN		7141 - D224	MD224[339]	69310693	60050153[277]	NR	NR
1988 C6D042, C6D064 Conventional	Rd	BX		7142 - D225	MD225	R40H5010	R40H5522	NR	NR
	Rd	BX		7108 - D184	MD184	R40H5010	R40H5519	NR	NR
	Rd	DN		7141 - D224	MD224[339]	69310693	60050153[277]	NR	NR
W6R042	Fm		400mm x 115mm	1421 - S616	R467412-21[343]	R407413	R407414	N/A	N/A
	Rm		410mm x 115mm	1420 - S615	R46741821[344]	R407417	N/A	N/A	N/A
	Rm		410mm x 115mm	1420 - S615	R46741821[344]	R407417	N/A	N/A	N/A
5,000 lb.	Fa	GM	14 " x 2-1/2 "	2039 - 299	N/A	R40H599	R40H9206	R40H3500	R40H3501
	Fa	GM	14 " x 2-1/2 "	2039 - 299	N/A	R40H599	R40H9206	R40H3500	R40H3501
C6D042, C6D064 Conventional 5,000 lb.	Fd	BX		7142 - D225	MD225	R40H5010	R40H5522	NR	NR
	Fd	BX		7108 - D184	MD184	R40H5010	R40H5519	NR	NR
	Fd	DN		7141 - D224	MD224[339]	69310693	60050153[277]	NR	NR
C6D042, C6D064 Conventional 5,000, 7,000lb. GVW	Fd	BX		7108 - D184	MD184	R40H5010	R40H5519	NR	NR
	Fd	BX		7142 - D225	MD225	R40H5010	R40H5522	NR	NR
	Fd	BX		7108 - D184	MD184	R40H5010	R40H5519	NR	NR
	Fd	BX		7142 - D225	MD225	R40H5010	R40H5522	NR	NR
	Fd	BX		7108 - D184	MD184	R40H5010	R40H5519	NR	NR
	Fd	BX		7108 - D184	MD184	R40H5010	R40H5519	NR	NR
	Fd	BX		7142 - D225	MD225	R40H5010	R40H5522	NR	NR
	Fd	BX		7142 - D225	MD225	R40H5010	R40H5522	NR	NR
	Fd	BX		7142 - D225	MD225	R40H5010	R40H5522	NR	NR
	Fd	BX		7108 - D184	MD184	R40H5010	R40H5519	NR	NR
	Fd	DN		7141 - D224	MD224[339]	69310693	60050153[277]	NR	NR
	Fd	DN		7141 - D224	MD224[339]	69310693	60050153[277]	NR	NR
	Fd	DN		7141 - D224	MD224[339]	69310693	60050153[277]	NR	NR
	Fd	DN		7141 - D224	MD224[339]	69310693	60050153[277]	NR	NR
P6T042 5,000, 7,000lb. GVW	Fd	BX		7815 - D380	MD184	R40H5010	R40H5519	NR	NR
	Fd	DN		7141 - D224	MD224[339]	69310693	60050153[277]	NR	NR
B6P042 School Bus 7,000 lb.	Fd	DN		7141 - D224	MD224[339]	69310693	60050153[277]	NR	NR
	Fd	DN		7141 - D224	MD224[339]	69310693	60050153[277]	NR	NR
	Fd	DN		7141 - D224	MD224[339]	69310693	60050153[277]	NR	NR
B6P042 School Bus 9,000 lb.	Fd	BX		7142 - D225	MD225	R40H5010	R40H5522	NR	NR
B6P042 School Bus 15,000 lb. GVW	Rd	DN		7141 - D224	MD224[339]	69310693	60050153[277]	NR	NR
	Rd	DN		7141 - D224	MD224[339]	69310693	60050153[277]	NR	NR
C6D042, C6D064 Conventional 15,000 lb. GVW	Rd	BX		7108 - D184	MD184	R40H5010	R40H5519	NR	NR

32 - For rotor only use R44141480
40 - For chrome plated steel version, use R4090070P
201 - Steel Piston
37 - Also available as a New unit
41 - Aluminum piston
266 - 10 Stud, Hat Shaped
39 - First design, uses steel pistons.
72 - Phenolic/Steel Face
268 - 5 Stud, Hat Shape

MERITOR DRUM OR ROTOR NO.	CALIPER OR CYLINDER BORE SIZE	MERITOR CALIPER OR WHEEL CYLINDER (LEFT)	MERITOR CALIPER OR WHEEL CYLINDER (RIGHT)	MERITOR CALIPER OR WHEEL CYLINDER REPAIR KIT	MERITOR CALIPER PISTON	MERITOR MASTER CYLINDER	MERITOR MASTER CYLINDER KIT	MERITOR BRAKE HOSE (LEFT)	MERITOR BRAKE HOSE (RIGHT)
GMC / CHEV(Cont.)									
60, 6000 SERIES-20,000-27,500 lb. GVW (Cont.)									
23-122729-002[266]	2-7/8 "	R42R55250	R42R55250[37]	R4066365	R4090096[72]	-	-	-	-
23-122729-002[266]	2-19/32 "	R42R55314	R42R55314[37]	R40107771	R4090100P[72]	-	-	-	-
23-122729-002[266]	2-7/8 "	R42R55250	R42R55250[37]	R4066365	R4090096[72]	-	-	-	-
23-122729-002[266]	2-1/2 "	R424244X	R424244X[37]	60050266	69270757[41]	-	-	-	-
N/A	2-19/32 "	R42R55314	R42R55314[37]	R40107771	R4090100P[72]	-	-	-	-
N/A	2-7/8 "	R42R55250	R42R55250[37]	R4066365	R4090096[72]	-	-	-	-
N/A	2-1/2 "	R424244X	R424244X[37]	60050266	69270757[41]	-	-	-	-
23-122693-002	2-7/8 "	R42R55250	R42R55250[37]	R4066365	R4090096[72]	-	-	-	-
23-122693-002	2-19/32 "	R42R55314	R42R55314[37]	R40107771	R4090100P[72]	-	-	-	-
23-122693-002	2-1/2 "	R424244X	R424244X[37]	60050266	69270757[41]	-	-	-	-
23-123468-002[288]	2-7/8 "	R429218X	R429218X[39]	R406532	R4090070[40]	-	-	-	-
23-123468-002[288]	2-19/32 "	R42R55245	R42R55245[39]	R402235118	R402238231[201]	-	-	-	-
23-123468-002[288]	2-1/2 "	R424244X	R424244X[37]	60050266	69270757[41]	-	-	-	-
N/A	1-3/8 "	R417415	R417416	R417417	NR	R4110348[307]	R4110406	-	-
N/A	1-47/64 "	R417421	R417423[330]	R417424	NR	-	-	-	-
N/A	1-47/64 "	R417420	R417422[329]	R417424	NR	-	-	-	-
N/A	1-1/4 "	R4133320	R4133321	R415194	NR	-	-	-	-
N/A	1-1/8 "	R4133320	R4133321	R415194	NR	-	-	-	-
23-123046-002	2-7/8 "	R429218X	R429218X[39]	R406532	R4090070[40]	-	-	-	-
23-123046-002	2-19/32 "	R42R55245	R42R55245[39]	R402235118	R402238231[201]	-	-	-	-
23-123046-002	2-1/2 "	R424244X	R424244X[37]	60050266	69270757[41]	-	-	-	-
R44141480[32]	2-19/32 "	R42R55245	R42R55245[39]	R402235118	R402238231[201]	-	-	-	-
23-123468-002[288]	2-7/8 "	R429218X	R429218X[39]	R406532	R4090070[40]	-	-	-	-
R44141583[287]	2-19/32 "	R42R55245	R42R55245[39]	R402235118	R402238231[201]	-	-	-	-
R44141480[32]	2-7/8 "	R429218X	R429218X[39]	R406532	R4090070[40]	-	-	-	-
23-123041-002	2-19/32 "	R42R55245	R42R55245[39]	R402235118	R402238231[201]	-	-	-	-
23-123468-002[288]	2-19/32 "	R42R55245	R42R55245[39]	R402235118	R402238231[201]	-	-	-	-
23-123041-002	2-7/8 "	R429218X	R429218X[39]	R406532	R4090070[40]	-	-	-	-
N/A[286]	2-7/8 "	R429218X	R429218X[39]	R406532	R4090070[40]	-	-	-	-
R44141583[287]	2-7/8 "	R429218X	R429218X[39]	R406532	R4090070[40]	-	-	-	-
N/A[286]	2-19/32 "	R42R55245	R42R55245[39]	R402235118	R402238231[201]	-	-	-	-
N/A[286]	2-1/2 "	R424244X	R424244X[37]	60050266	69270757[41]	-	-	-	-
R44141583[287]	2-1/2 "	R424244X	R424244X[37]	60050266	69270757[41]	-	-	-	-
23-123468-002[288]	2-1/2 "	R424244X	R424244X[37]	60050266	69270757[41]	-	-	-	-
R44141480[32]	2-1/2 "	R424244X	R424244X[37]	60050266	69270757[41]	-	-	-	-
N/A[286]	2-19/32 "	R42R55245	R42R55245[39]	R402235118	R402238231[201]	-	-	-	-
N/A[286]	2-1/2 "	R424244X	R424244X[37]	60050266	69270757[41]	-	-	-	-
23-123486-002[268]	2-1/2 "	R424244X	R424244X[37]	60050266	69270757[41]	-	-	-	-
R44141583[287]	2-1/2 "	R424244X	R424244X[37]	60050266	69270757[41]	-	-	-	-
23-123468-002[288]	2-1/2 "	R424244X	R424244X[37]	60050266	69270757[41]	-	-	-	-
23-122729-002[266]	2-7/8 "	R429218X	R429218X[39]	R406532	R4090070[40]	-	-	-	-
23-123468-002[288]	2-1/2 "	R424244X	R424244X[37]	60050266	69270757[41]	-	-	-	-
23-123486-002[268]	2-1/2 "	R424244X	R424244X[37]	60050266	69270757[41]	-	-	-	-
23-123486-002[268]	2-19/32 "	R42R55245	R42R55245[39]	R402235118	R402238231[201]	-	-	-	-

344 - Use E-7411 for Lining and Rivet Set
288 - Dayton Rotor with 6 Studs
330 - Rearward
Contact our Customer Service Teams
1-888-725-9355

286 - Budd Rotor with 10 Studs
307 - Power Brakes, Single System Hydrovac
339 - Use 69160441 for Disc Pad Retainer Clip

287 - Budd rotor with 6 studs
329 - Forward
343 - Use E-7409 for Lining and Rivet Set
www.XpresswayPlus.com

MAKE MODEL YEAR AXLE CODE AXLE WEIGHT	AXLE & BRK. TYPE	BRK. MFG.	BRAKE SIZE	FMSI	MERITOR DISC PAD OR BRAKE SHOE	MERITOR GUIDE PIN OR RETURN SPRING KIT	MERITOR CALIPER HWD. KIT OR RETURN SPRING KIT	MERITOR ADJUSTER KIT (LEFT WHEEL)	MERITOR ADJUSTER KIT (RIGHT WHEEL)
GMC / CHEV(Cont.)									
60, 6000 SERIES-20,000-27,500 lb. GVW (Cont.)									
1988									
	Rd	BX		7142 - D225	MD225	R40H5010	R40H5522	NR	NR
	Rd	DN		7141 - D224	MD224[339]	69310693	60050153[277]	NR	NR
P6T042 15,000 lb. GVW	Rd	DN		7141 - D224	MD224[339]	69310693	60050153[277]	NR	NR
B6P042 School Bus 16,000, 17,000, 19,000lb. GVW	Rd	BX		7142 - D225	MD225	R40H5010	R40H5522	NR	NR
C6D042, C6D064 Conventional 17,500 lb. GVW	Rd	BX		7142 - D225	MD225	R40H5010	R40H5522	NR	NR
	Rd	BX		7108 - D184	MD184	R40H5010	R40H5519	NR	NR
	Rd	DN		7141 - D224	MD224[339]	69310693	60050153[277]	NR	NR
C6D042, C6D064 Conventional 19,000 lb. GVW	Rd	BX		7108 - D184	MD184	R40H5010	R40H5519	NR	NR
	Rd	BX		7142 - D225	MD225	R40H5010	R40H5522	NR	NR
	Rd	DN		7141 - D224	MD224[339]	69310693	60050153[277]	NR	NR
C6D042, C6D064 Conventional 21,000, 23,000lb. GVW	Rd	BX		7108 - D184	MD184	R40H5010	R40H5519	NR	NR
	Rd	BX		7142 - D225	MD225	R40H5010	R40H5522	NR	NR
	Rd	DN		7141 - D224	MD224[339]	69310693	60050153[277]	NR	NR
1987 C6D042, C6D064 Steel Conventional F050, F055	Fa	GM	14 " x 2-1/2 "	2039 - 299	N/A	R40H599	R40H9206	R40H3500	R40H3501
	Fa	GM	14 " x 2-1/2 "	2039 - 299	N/A	R40H599	R40H9206	R40H3500	R40H3501
	Fa	GM	14 " x 2-1/2 "	2039 - 299	N/A	R40H599	R40H9206	R40H3500	R40H3501
P6T042	Fa		14 " x 2-1/2 "	2039 - S634	N/A	N/A	N/A	N/A	N/A
	Fa	GM	14 " x 2-1/2 "	2039 - 299	N/A	R40H599	R40H9206	R40H3500	R40H3501
W6R042	Fm		400mm x 115mm	1421 - S616	R467412-21[343]	R407413	R407414	N/A	N/A
	Rm		410mm x 115mm	1420 - S615	R46741821[344]	R407417	N/A	N/A	N/A
	Rm		410mm x 115mm	1420 - S615	R46741821[344]	R407417	N/A	N/A	N/A
B6P042 School Bus 5,000 lb.	Fa	GM	14 " x 2-1/2 "	2039 - 299	N/A	R40H599	R40H9206	R40H3500	R40H3501
	Fa	GM	14 " x 2-1/2 "	2039 - 299	N/A	R40H599	R40H9206	R40H3500	R40H3501
C6D042, C6D064 Steel Conventional 6,000, 7,000lb. GVW	Fa	WG	15 " x 3 "	1245C - 321	R700321	R40H521	R40H9237	R40H3502	R40H3503
B6P042 School Bus 7,000 lb.	Fd	DN		7141 - D224	MD224[339]	69310693	60050153[277]	NR	NR
	Fd	DN		7141 - D224	MD224[339]	69310693	60050153[277]	NR	NR
	Fd	DN		7141 - D224	MD224[339]	69310693	60050153[277]	NR	NR
C6D042, C6D064 Conventional 7,000 lb.	Fd	DN		7141 - D224	MD224[339]	69310693	60050153[277]	NR	NR
	Fd	DN		7141 - D224	MD224[339]	69310693	60050153[277]	NR	NR
	Ra	GM	15 " x 5 "	4639 - 442	R700442	R40H550	R404121	R40H3510	R40H3511
	Ra	GM	15 " x 5 "	4639 - 442	R700442	R40H550	R404121	R40H3510	R40H3511
	Rd	BX		7142 - D225	MD225	R40H5010	R40H5522	NR	NR
	Rd	BX		7142 - D225	MD225	R40H5010	R40H5522	NR	NR
P6T042 7,000 lb.	Fd	DN		7141 - D224	MD224[339]	69310693	60050153[277]	NR	NR
	Ra	GM	15 " x 4 "	4640 - 427	R700427	R40H550	R404121	R40H3510	R40H3511
	Ra	GM	15 " x 5 "	4639 - 442	R700442	R40H550	R404121	R40H3510	R40H3511
B6P042 School Bus 9,000 lb.	Fd	BX		7142 - D225	MD225	R40H5010	R40H5522	NR	NR
B6P042 School Bus 15,000 lb. GVW	Ra	GM	15 " x 5 "	4639 - 442	R700442	R40H550	R404121	R40H3510	R40H3511
	Rd	DN		7141 - D224	MD224[339]	69310693	60050153[277]	NR	NR
	Rd	DN		7141 - D224	MD224[339]	69310693	60050153[277]	NR	NR
B6P042 School Bus 16,000, 17,000, 19,000lb. GVW	Rd	BX		7142 - D225	MD225	R40H5010	R40H5522	NR	NR

37 - Also available as a New unit
41 - Aluminum piston
268 - 5 Stud, Hat Shape
39 - First design, uses steel pistons.
201 - Steel Piston
277 - For Pad Retainer, Use 69160441
40 - For chrome plated steel version, use R4090070P
266 - 10 Stud, Hat Shaped
287 - Budd rotor with 6 studs

MERITOR DRUM OR ROTOR NO.	CALIPER OR CYLINDER BORE SIZE	MERITOR CALIPER OR WHEEL CYLINDER (LEFT)	MERITOR CALIPER OR WHEEL CYLINDER (RIGHT)	MERITOR CALIPER OR WHEEL CYLINDER REPAIR KIT	MERITOR CALIPER PISTON	MERITOR MASTER CYLINDER	MERITOR MASTER CYLINDER KIT	MERITOR BRAKE HOSE (LEFT)	MERITOR BRAKE HOSE (RIGHT)
GMC / CHEV(Cont.)									
60, 6000 SERIES-20,000-27,500 lb. GVW (Cont.)									
23-123486-002[268]	2-7/8 "	R429218X	R429218X[39]	R406532	R4090070[40]	-	-	-	-
23-123486-002[268]	2-1/2 "	R424244X	R424244X[37]	60050266	69270757[41]	-	-	-	-
23-123486-002[268]	2-1/2 "	R424244X	R424244X[37]	60050266	69270757[41]	-	-	-	-
23-122729-002[266]	2-7/8 "	R429218X	R429218X[39]	R406532	R4090070[40]	-	-	-	-
23-122729-002[266]	2-7/8 "	R429218X	R429218X[39]	R406532	R4090070[40]	-	-	-	-
23-122729-002[266]	2-19/32 "	R42R55245	R42R55245[39]	R402235118	R402238231[201]	-	-	-	-
23-122729-002[266]	2-1/2 "	R424244X	R424244X[37]	60050266	69270757[41]	-	-	-	-
N/A	2-19/32 "	R42R55245	R42R55245[39]	R402235118	R402238231[201]	-	-	-	-
N/A	2-7/8 "	R429218X	R429218X[39]	R406532	R4090070[40]	-	-	-	-
N/A	2-1/2 "	R424244X	R424244X[37]	60050266	69270757[41]	-	-	-	-
23-122693-002	2-19/32 "	R42R55245	R42R55245[39]	R402235118	R402238231[201]	-	-	-	-
23-122693-002	2-7/8 "	R429218X	R429218X[39]	R406532	R4090070[40]	-	-	-	-
23-122693-002	2-1/2 "	R424244X	R424244X[37]	60050266	69270757[41]	-	-	-	-
N/A	1-1/8 "	R4133320	R4133321	R415194	NR	R4111993[302]	R4122386	R4577495	R4577495
N/A	7/8 "	R4133406	R4133407	R4166820	NR	-	-	-	-
N/A	1-1/4 "	R4133320	R4133321	R415194	NR	R4111993[302]	R4122386	R4577495	R4577495
N/A	7/8 "	R4133406	R4133407	R4166820	NR	R4111993[302]	R4122386	R4577484	R4577484
N/A	7/8 "	R4133406	R4133407	R4166820	NR	R4111993[302]	R4122386	R4577484	R4577484
N/A	1-3/8 "	R417415	R417416	R417417	NR	R4110348[307]	R4110406	-	-
N/A	1-47/64 "	R417420	R417422[329]	R417424	NR	-	-	-	-
N/A	1-47/64 "	R417421	R417423[330]	R417424	NR	-	-	-	-
N/A	1-1/4 "	R4133320	R4133321	R415194	NR	R4111993[306]	R4122386	-	-
N/A	1-1/8 "	R4133320	R4133321	R415194	NR	R4111993[306]	R4122386	-	-
N/A	1-1/8 "	R4133320	R4133321	R4166926	NR	R4111993[306]	R4122386	-	-
R44141583[287]	2-1/2 "	R424244X	R424244X[37]	60050266	69270757[41]	R4111993[302]	R4122386	R4577495	R4577495
23-123468-002[288]	2-1/2 "	R424244X	R424244X[37]	60050266	69270757[41]	R4111993[302]	R4122386	R4577495	R4577495
23-123486-002[268]	2-1/2 "	R424244X	R424244X[37]	60050266	69270757[41]	R4111993[302]	R4122386	R4577495	R4577495
23-123486-002[268]	2-1/2 "	R424244X	R424244X[37]	60050266	69270757[41]	R4111993[302]	R4122386	R4577495	R4577495
23-123486-002[268]	2-1/2 "	R424244X	R424244X[37]	60050266	69270757[41]	R4111993[302]	R4122386	R4577495	R4577495
N/A	1-1/2 "	R4133655	R4133656	R415194	NR	-	-	R4577482[323]	R4577482
N/A	1-1/2 "	R4133655	R4133656	R415194	NR	-	-	R4577482[323]	R4577482
23-122729-002[266]	2-7/8 "	R429218X	R429218X[39]	R406532	R4090070[40]	-	-	R4577482[323]	R4577482
23-122729-002[266]	2-7/8 "	R429218X	R429218X[39]	R406532	R4090070[40]	-	-	R4577482[323]	R4577482
23-123486-002[268]	2-1/2 "	R424244X	R424244X[37]	60050266	69270757[41]	R4111993[302]	R4122386	R4577484	R4577484
N/A	1-1/2 "	R4133655	R4133656	R415194	NR	-	-	R4577482[323]	R4577482
N/A	1-1/2 "	R4133655	R4133656	R415194	NR	-	-	R4577482[323]	R4577482
23-122729-002[266]	2-7/8 "	R429218X	R429218X[39]	R406532	R4090070[40]	R4111993[302]	R4122386	R4577495	R4577495
N/A	1-1/2 "	R4133655	R4133656	R415194	NR	-	-	R4577482[323]	R4577482
23-123468-002[288]	2-1/2 "	R424244X	R424244X[37]	60050266	69270757[41]	-	-	R4577482[323]	R4577482
23-123486-002[268]	2-1/2 "	R424244X	R424244X[37]	60050266	69270757[41]	-	-	R4577482[323]	R4577482
23-122729-002[266]	2-7/8 "	R429218X	R429218X[39]	R406532	R4090070[40]	-	-	R4577482[323]	R4577482

344 - Use E-7411 for Lining and Rivet Set
307 - Power Brakes, Single System Hydrovac
330 - Rearward
Contact our Customer Service Teams
1-888-725-9355

302 - Power Brakes, Dual System
323 - 17.50" Length
339 - Use 69160441 for Disc Pad Retainer Clip

306 - Power Brakes, Single System
329 - Forward
343 - Use E-7409 for Lining and Rivet Set
www.XpresswayPlus.com

MAKE MODEL YEAR AXLE CODE AXLE WEIGHT	AXLE & BRK. TYPE	BRK. MFG.	BRAKE SIZE	FMSI	MERITOR DISC PAD OR BRAKE SHOE	MERITOR GUIDE PIN OR RETURN SPRING KIT	MERITOR CALIPER HWD. KIT OR RETURN SPRING KIT	MERITOR ADJUSTER KIT (LEFT WHEEL)	MERITOR ADJUSTER KIT (RIGHT WHEEL)
GMC / CHEV(Cont.)									
60, 6000 SERIES-20,000-27,500 lb. GVW (Cont.)									
1986 C6D042, C6D064 Steel Conventional F050, F055	Fa	GM	14 " x 2-1/2 "	2039 - 299	N/A	R40H599	R40H9206	R40H3500	R40H3501
B6P042 School Bus 5,000 lb.	Fa	GM	14 " x 2-1/2 "	2039 - 299	N/A	R40H599	R40H9206	R40H3500	R40H3501
	Fa	GM	14 " x 2-1/2 "	2039 - 299	N/A	R40H599	R40H9206	R40H3500	R40H3501
C6D042, C6D064 Steel Conventional 6,000, 7,000lb. GVW	Fa	WG	15 " x 3 "	1245C - 321	R700321	R40H521	R40H9237	R40H3502	R40H3503
B6P042 School Bus 7,000 lb.	Fd	DN		7141 - D224	MD224[339]	69310693	60050153[277]	NR	NR
	Fd	DN		7141 - D224	MD224[339]	69310693	60050153[277]	NR	NR
	Fd	DN		7141 - D224	MD224[339]	69310693	60050153[277]	NR	NR
C6D042, C6D064 Conventional 7,000 lb.	Fd	DN		7141 - D224	MD224[339]	69310693	60050153[277]	NR	NR
	Fd	DN		7141 - D224	MD224[339]	69310693	60050153[277]	NR	NR
	Ra	GM	15 " x 5 "	4639 - 442	R700442	R40H550	R404121	R40H3510	R40H3511
	Ra	GM	15 " x 5 "	4639 - 442	R700442	R40H550	R404121	R40H3510	R40H3511
	Rd	BX		7142 - D225	MD225	R40H5010	R40H5522	NR	NR
	Rd	BX		7142 - D225	MD225	R40H5010	R40H5522	NR	NR
P6T042 7,000 lb.	Fd	DN		7141 - D224	MD224[339]	69310693	60050153[277]	NR	NR
	Fd	DN		7141 - D224	MD224[339]	69310693	60050153[277]	NR	NR
	Ra	GM	15 " x 5 "	4639 - 442	R700442	R40H550	R404121	R40H3510	R40H3511
	Ra	GM	15 " x 5 "	4639 - 442	R700442	R40H550	R404121	R40H3510	R40H3511
	Rd	BX		7142 - D225	MD225	R40H5010	R40H5522	NR	NR
	Rd	BX		7142 - D225	MD225	R40H5010	R40H5522	NR	NR
B6P042 School Bus 9,000 lb.	Fd	BX		7142 - D225	MD225	R40H5010	R40H5522	NR	NR
B6P042 School Bus 15,000 lb. GVW	Ra	GM	15 " x 5 "	4639 - 442	R700442	R40H550	R404121	R40H3510	R40H3511
	Rd	DN		7141 - D224	MD224[339]	69310693	60050153[277]	NR	NR
	Rd	DN		7141 - D224	MD224[339]	69310693	60050153[277]	NR	NR
B6P042 School Bus 16,000, 17,000, 19,000lb. GVW	Rd	BX		7142 - D225	MD225	R40H5010	R40H5522	NR	NR
1985 C6D042, C6D064 Steel Conventional F050, F055	Fa	GM	14 " x 2-1/2 "	2039 - 299	N/A	R40H599	R40H9206	R40H3500	R40H3501
B6P042 School Bus 5,000 lb.	Fa	GM	14 " x 2-1/2 "	2039 - 299	N/A	R40H599	R40H9206	R40H3500	R40H3501
	Fa	GM	14 " x 2-1/2 "	2039 - 299	N/A	R40H599	R40H9206	R40H3500	R40H3501
C6D042, C6D064 Steel Conventional 6,000, 7,000lb. GVW	Fa	WG	15 " x 3 "	1245C - 321	R700321	R40H521	R40H9237	R40H3502	R40H3503
B6P042 School Bus 7,000 lb.	Fd	DN		7141 - D224	MD224[339]	69310693	60050153[277]	NR	NR
	Fd	DN		7141 - D224	MD224[339]	69310693	60050153[277]	NR	NR
	Fd	DN		7141 - D224	MD224[339]	69310693	60050153[277]	NR	NR
C6D042, C6D064 Conventional 7,000 lb.	Fd	DN		7141 - D224	MD224[339]	69310693	60050153[277]	NR	NR
	Fd	DN		7141 - D224	MD224[339]	69310693	60050153[277]	NR	NR
	Ra	GM	15 " x 5 "	4639 - 442	R700442	R40H550	R404121	R40H3510	R40H3511
	Ra	GM	15 " x 5 "	4639 - 442	R700442	R40H550	R404121	R40H3510	R40H3511
	Rd	BX		7142 - D225	MD225	R40H5010	R40H5522	NR	NR
	Rd	BX		7142 - D225	MD225	R40H5010	R40H5522	NR	NR
P6T042 7,000 lb.	Fd	DN		7141 - D224	MD224[339]	69310693	60050153[277]	NR	NR
	Fd	DN		7141 - D224	MD224[339]	69310693	60050153[277]	NR	NR
	Ra	GM	15 " x 5 "	4639 - 442	R700442	R40H550	R404121	R40H3510	R40H3511

37 - Also available as a New unit
41 - Aluminum piston
277 - For Pad Retainer, Use 69160441
39 - First design, uses steel pistons.
266 - 10 Stud, Hat Shaped
287 - Budd rotor with 6 studs
40 - For chrome plated steel version, use R4090070P
268 - 5 Stud, Hat Shape
288 - Dayton Rotor with 6 Studs

MERITOR DRUM OR ROTOR NO.	CALIPER OR CYLINDER BORE SIZE	MERITOR CALIPER OR WHEEL CYLINDER (LEFT)	MERITOR CALIPER OR WHEEL CYLINDER (RIGHT)	MERITOR CALIPER OR WHEEL CYLINDER REPAIR KIT	MERITOR CALIPER PISTON	MERITOR MASTER CYLINDER	MERITOR MASTER CYLINDER KIT	MERITOR BRAKE HOSE (LEFT)	MERITOR BRAKE HOSE (RIGHT)
GMC / CHEV(Cont.)									
60, 6000 SERIES-20,000-27,500 lb. GVW (Cont.)									
N/A	7/8 "	R4133406	R4133407	R4166820	NR	-	-	-	-
N/A	1-1/4 "	R4133320	R4133321	R415194	NR	R4111993[306]	R4122386	-	-
N/A	1-1/8 "	R4133320	R4133321	R415194	NR	R4111993[306]	R4122386	-	-
N/A	1-1/8 "	R4133320	R4133321	R4166926	NR	R4111993[306]	R4122386	-	-
23-123468-002[288]	2-1/2 "	R424244X	R424244X[37]	60050266	69270757[41]	R4111993[302]	R4122386	R4577495	R4577495
R44141583[287]	2-1/2 "	R424244X	R424244X[37]	60050266	69270757[41]	R4111993[302]	R4122386	R4577495	R4577495
23-123486-002[268]	2-1/2 "	R424244X	R424244X[37]	60050266	69270757[41]	R4111993[302]	R4122386	R4577495	R4577495
23-123486-002[268]	2-1/2 "	R424244X	R424244X[37]	60050266	69270757[41]	-	-	-	-
23-123486-002[268]	2-1/2 "	R424244X	R424244X[37]	60050266	69270757[41]	-	-	-	-
N/A	1-1/2 "	R4133655	R4133656	R415194	NR	-	-	R4577482[323]	R4577482
N/A	1-1/2 "	R4133655	R4133656	R415194	NR	-	-	R4577482[323]	R4577482
23-122729-002[266]	2-7/8 "	R429218X	R429218X[39]	R406532	R4090070[40]	-	-	-	-
23-122729-002[266]	2-7/8 "	R429218X	R429218X[39]	R406532	R4090070[40]	-	-	-	-
23-123486-002[268]	2-1/2 "	R424244X	R424244X[37]	60050266	69270757[41]	R4111993[302]	R4122386	R4577495	R4577495
23-123486-002[268]	2-1/2 "	R424244X	R424244X[37]	60050266	69270757[41]	R4111993[302]	R4122386	R4577495	R4577495
N/A	1-1/2 "	R4133655	R4133656	R415194	NR	-	-	R4577482[323]	R4577482
N/A	1-1/2 "	R4133655	R4133656	R415194	NR	-	-	R4577482[323]	R4577482
23-122729-002[266]	2-7/8 "	R429218X	R429218X[39]	R406532	R4090070[40]	-	-	R4577482[323]	R4577482
23-122729-002[266]	2-7/8 "	R429218X	R429218X[39]	R406532	R4090070[40]	-	-	R4577482[323]	R4577482
23-122729-002[266]	2-7/8 "	R429218X	R429218X[39]	R406532	R4090070[40]	R4111993[302]	R4122386	R4577495	R4577495
N/A	1-1/2 "	R4133655	R4133656	R415194	NR	-	-	R4577482[323]	R4577482
23-123468-002[288]	2-1/2 "	R424244X	R424244X[37]	60050266	69270757[41]	-	-	R4577482[323]	R4577482
23-123486-002[268]	2-1/2 "	R424244X	R424244X[37]	60050266	69270757[41]	-	-	R4577482[323]	R4577482
23-122729-002[266]	2-7/8 "	R429218X	R429218X[39]	R406532	R4090070[40]	-	-	R4577482[323]	R4577482
N/A	7/8 "	R4133406	R4133407	R4166820	NR	-	-	-	-
N/A	1-1/8 "	R4133320	R4133321	R415194	NR	R4111993[306]	R4122386	-	-
N/A	1-1/4 "	R4133320	R4133321	R415194	NR	R4111993[306]	R4122386	-	-
N/A	1-1/8 "	R4133320	R4133321	R4166926	NR	R4111993[306]	R4122386	-	-
23-123468-002[288]	2-1/2 "	R424244X	R424244X[37]	60050266	69270757[41]	R4111993[302]	R4122386	R4577495	R4577495
23-123486-002[268]	2-1/2 "	R424244X	R424244X[37]	60050266	69270757[41]	R4111993[302]	R4122386	R4577495	R4577495
R44141583[287]	2-1/2 "	R424244X	R424244X[37]	60050266	69270757[41]	R4111993[302]	R4122386	R4577495	R4577495
23-123486-002[268]	2-1/2 "	R424244X	R424244X[37]	60050266	69270757[41]	-	-	-	-
23-123486-002[268]	2-1/2 "	R424244X	R424244X[37]	60050266	69270757[41]	-	-	-	-
N/A	1-1/2 "	R4133655	R4133656	R415194	NR	-	-	R4577482[323]	R4577482
N/A	1-1/2 "	R4133655	R4133656	R415194	NR	-	-	R4577482[323]	R4577482
23-122729-002[266]	2-7/8 "	R429218X	R429218X[39]	R406532	R4090070[40]	-	-	-	-
23-122729-002[266]	2-7/8 "	R429218X	R429218X[39]	R406532	R4090070[40]	-	-	-	-
23-123486-002[268]	2-1/2 "	R424244X	R424244X[37]	60050266	69270757[41]	R4111993[302]	R4122386	R4577495	R4577495
23-123486-002[268]	2-1/2 "	R424244X	R424244X[37]	60050266	69270757[41]	R4111993[302]	R4122386	R4577495	R4577495
N/A	1-1/2 "	R4133655	R4133656	R415194	NR	-	-	R4577482[323]	R4577482

302 - Power Brakes, Dual System
306 - Power Brakes, Single System
323 - 17.50" Length
339 - Use 69160441 for Disc Pad Retainer Clip

MAKE MODEL YEAR AXLE CODE AXLE WEIGHT	AXLE & BRK. TYPE	BRK. MFG.	BRAKE SIZE	FMSI	MERITOR DISC PAD OR BRAKE SHOE	MERITOR GUIDE PIN OR RETURN SPRING KIT	MERITOR CALIPER HWD. KIT OR RETURN SPRING KIT	MERITOR ADJUSTER KIT (LEFT WHEEL)	MERITOR ADJUSTER KIT (RIGHT WHEEL)
GMC / CHEV(Cont.)									
60, 6000 SERIES-20,000-27,500 lb. GVW									
1985 P6T042 7,000 lb.	Ra	GM	15 " x 5 "	4639 - 442	R700442	R40H550	R404121	R40H3510	R40H3511
	Rd	BX		7142 - D225	MD225	R40H5010	R40H5522	NR	NR
	Rd	BX		7142 - D225	MD225	R40H5010	R40H5522	NR	NR
B6P042 School Bus 9,000 lb.	Fd	BX		7142 - D225	MD225	R40H5010	R40H5522	NR	NR
B6P042 School Bus 15,000 lb. GVW	Ra	GM	15 " x 5 "	4639 - 442	R700442	R40H550	R404121	R40H3510	R40H3511
	Rd	DN		7141 - D224	MD224[339]	69310693	60050153[277]	NR	NR
	Rd	DN		7141 - D224	MD224[339]	69310693	60050153[277]	NR	NR
B6P042 School Bus 16,000, 17,000, 19,000lb. GVW	Rd	BX		7142 - D225	MD225	R40H5010	R40H5522	NR	NR
1984 C6D042, C6D064 Steel Conventional F050, F055	Fa	GM	14 " x 2-1/2 "	2039 - 299	N/A	R40H599	R40H9206	R40H3500	R40H3501
B6P042 School Bus 5,000 lb.	Fa	GM	14 " x 2-1/2 "	2039 - 299	N/A	R40H599	R40H9206	R40H3500	R40H3501
	Fa	GM	14 " x 2-1/2 "	2039 - 299	N/A	R40H599	R40H9206	R40H3500	R40H3501
C6D042, C6D064 Steel Conventional 6,000, 7,000lb. GVW	Fa	WG	15 " x 3 "	1245C - 321	R700321	R40H521	R40H9237	R40H3502	R40H3503
B6P042 School Bus 7,000 lb.	Fd	DN		7141 - D224	MD224[339]	69310693	60050153[277]	NR	NR
	Fd	DN		7141 - D224	MD224[339]	69310693	60050153[277]	NR	NR
	Fd	DN		7141 - D224	MD224[339]	69310693	60050153[277]	NR	NR
C6D042, C6D064 Conventional 7,000 lb.	Fd	DN		7141 - D224	MD224[339]	69310693	60050153[277]	NR	NR
	Fd	DN		7141 - D224	MD224[339]	69310693	60050153[277]	NR	NR
	Ra	GM	15 " x 5 "	4639 - 442	R700442	R40H550	R404121	R40H3510	R40H3511
	Ra	GM	15 " x 5 "	4639 - 442	R700442	R40H550	R404121	R40H3510	R40H3511
	Rd	BX		7142 - D225	MD225	R40H5010	R40H5522	NR	NR
	Rd	BX		7142 - D225	MD225	R40H5010	R40H5522	NR	NR
P6T042 7,000 lb.	Fd	DN		7141 - D224	MD224[339]	69310693	60050153[277]	NR	NR
	Fd	DN		7141 - D224	MD224[339]	69310693	60050153[277]	NR	NR
	Ra	GM	15 " x 5 "	4639 - 442	R700442	R40H550	R404121	R40H3510	R40H3511
	Ra	GM	15 " x 5 "	4639 - 442	R700442	R40H550	R404121	R40H3510	R40H3511
	Rd	BX		7142 - D225	MD225	R40H5010	R40H5522	NR	NR
	Rd	BX		7142 - D225	MD225	R40H5010	R40H5522	NR	NR
B6P042 School Bus 9,000 lb.	Fd	BX		7142 - D225	MD225	R40H5010	R40H5522	NR	NR
B6P042 School Bus 15,000 lb. GVW	Ra	GM	15 " x 5 "	4639 - 442	R700442	R40H550	R404121	R40H3510	R40H3511
	Rd	DN		7141 - D224	MD224[339]	69310693	60050153[277]	NR	NR
	Rd	DN		7141 - D224	MD224[339]	69310693	60050153[277]	NR	NR
B6P042 School Bus 16,000, 17,000, 19,000lb. GVW	Rd	BX		7142 - D225	MD225	R40H5010	R40H5522	NR	NR
1983 F090	Fm	WG	15 " x 3-1/2 "	1280 - 463	R700463	R40H521	R40H9201	R404132	R404132[279]
18121, 18221	Rm	WG	16 " x 6 "	1255 - 386	N/A	R40H597	R40H9200	R404149	R404150
22121, 22221	Ra	WG	16 " x 6 "	1255 - 386	N/A	R40H597	R40H9200	-	-
B6P042 School Bus 18121, 18221	Rm	WG	16 " x 6 "	1255 - 386	N/A	R40H597	R40H9200	R404149	R404150
B6P042 School Bus 18121, 18221,	Rm	WG	16 " x 6 "	1255 - 386	N/A	R40H597	R40H9200	R404149	R404150
B6P042 School Bus 22121, 22221	Ra	WG	16 " x 6 "	1255 - 386	N/A	R40H597	R40H9200	-	-
	Ra	WG	16 " x 6 "	1255 - 386	N/A	R40H597	R40H9200	-	-

37 - Also available as a New unit
39 - First design, uses steel pistons.
40 - For chrome plated steel version, use R4090070P
41 - Aluminum piston
266 - 10 Stud, Hat Shaped
268 - 5 Stud, Hat Shape
277 - For Pad Retainer, Use 69160441
279 - Has 2.29" Adjuster Studs, For 2.60" Studs Use E-4133
287 - Budd rotor with 6 studs

MERITOR DRUM OR ROTOR NO.	CALIPER OR CYLINDER BORE SIZE	MERITOR CALIPER OR WHEEL CYLINDER (LEFT)	MERITOR CALIPER OR WHEEL CYLINDER (RIGHT)	MERITOR CALIPER OR WHEEL CYLINDER REPAIR KIT	MERITOR CALIPER PISTON	MERITOR MASTER CYLINDER	MERITOR MASTER CYLINDER KIT	MERITOR BRAKE HOSE (LEFT)	MERITOR BRAKE HOSE (RIGHT)
GMC / CHEV(Cont.)									
60, 6000 SERIES-20,000-27,500 lb. GVW									
N/A	1-1/2 "	R4133655	R4133656	R415194	NR	-	-	R4577482[323]	R4577482
23-122729-002[266]	2-7/8 "	R429218X	R429218X[39]	R406532	R4090070[40]	-	-	R4577482[323]	R4577482
23-122729-002[266]	2-7/8 "	R429218X	R429218X[39]	R406532	R4090070[40]	-	-	R4577482[323]	R4577482
23-122729-002[266]	2-7/8 "	R429218X	R429218X[39]	R406532	R4090070[40]	R4111993[302]	R4122386	R4577495	R4577495
N/A	1-1/2 "	R4133655	R4133656	R415194	NR	-	-	R4577482[323]	R4577482
23-123486-002[268]	2-1/2 "	R424244X	R424244X[37]	60050266	69270757[41]	-	-	R4577482[323]	R4577482
23-123468-002[288]	2-1/2 "	R424244X	R424244X[37]	60050266	69270757[41]	-	-	R4577482[323]	R4577482
23-122729-002[266]	2-7/8 "	R429218X	R429218X[39]	R406532	R4090070[40]	-	-	R4577482[323]	R4577482
N/A	7/8 "	R4133406	R4133407	R4166820	NR	-	-	-	-
N/A	1-1/8 "	R4133320	R4133321	R415194	NR	R4111993[306]	R4122386	-	-
N/A	1-1/4 "	R4133320	R4133321	R415194	NR	R4111993[306]	R4122386	-	-
N/A	1-1/8 "	R4133320	R4133321	R4166926	NR	R4111993[306]	R4122386	-	-
R44141583[287]	2-1/2 "	R424244X	R424244X[37]	60050266	69270757[41]	R4111993[302]	R4122386	R4577495	R4577495
23-123468-002[288]	2-1/2 "	R424244X	R424244X[37]	60050266	69270757[41]	R4111993[302]	R4122386	R4577495	R4577495
23-123486-002[268]	2-1/2 "	R424244X	R424244X[37]	60050266	69270757[41]	R4111993[302]	R4122386	R4577495	R4577495
23-123486-002[268]	2-1/2 "	R424244X	R424244X[37]	60050266	69270757[41]	-	-	-	-
23-123486-002[268]	2-1/2 "	R424244X	R424244X[37]	60050266	69270757[41]	-	-	-	-
N/A	1-1/2 "	R4133655	R4133656	R415194	NR	-	-	R4577482[323]	R4577482
N/A	1-1/2 "	R4133655	R4133656	R415194	NR	-	-	R4577482[323]	R4577482
23-122729-002[266]	2-7/8 "	R429218X	R429218X[39]	R406532	R4090070[40]	-	-	-	-
23-122729-002[266]	2-7/8 "	R429218X	R429218X[39]	R406532	R4090070[40]	-	-	-	-
23-123486-002[268]	2-1/2 "	R424244X	R424244X[37]	60050266	69270757[41]	R4111993[302]	R4122386	R4577495	R4577495
23-123486-002[268]	2-1/2 "	R424244X	R424244X[37]	60050266	69270757[41]	R4111993[302]	R4122386	R4577484	R4577484
N/A	1-1/2 "	R4133655	R4133656	R415194	NR	-	-	R4577482[323]	R4577482
N/A	1-1/2 "	R4133655	R4133656	R415194	NR	-	-	R4577482[323]	R4577482
23-122729-002[266]	2-7/8 "	R429218X	R429218X[39]	R406532	R4090070[40]	-	-	R4577482[323]	R4577482
23-122729-002[266]	2-7/8 "	R429218X	R429218X[39]	R406532	R4090070[40]	-	-	R4577482[323]	R4577482
23-122729-002[266]	2-7/8 "	R429218X	R429218X[39]	R406532	R4090070[40]	R4111993[302]	R4122386	R4577495	R4577495
N/A	1-1/2 "	R4133655	R4133656	R415194	NR	-	-	R4577482[323]	R4577482
23-123468-002[288]	2-1/2 "	R424244X	R424244X[37]	60050266	69270757[41]	-	-	R4577482[323]	R4577482
23-123486-002[268]	2-1/2 "	R424244X	R424244X[37]	60050266	69270757[41]	-	-	R4577482[323]	R4577482
23-122729-002[266]	2-7/8 "	R429218X	R429218X[39]	R406532	R4090070[40]	-	-	R4577482[323]	R4577482
N/A	1-1/4 "	R4133376	R4133377	R4166923	NR	-	-	-	-
N/A	1-7/8 "	R4133420	R4133420	R4166897	NR	-	-	-	-
N/A	1-7/8 "	R4133420	R4133420	R4166897	NR	-	-	R4577482[323]	R4577482
N/A	1-7/8 "	R4133420	R4133420	R4166897	NR	-	-	R4577482[323]	R4577482
N/A	1-7/8 "	R4133420	R4133420	R4166897	NR	-	-	-	-
N/A	1-7/8 "	R4133420	R4133420	R4166897	NR	-	-	R4577482[323]	R4577482
N/A	1-7/8 "	R4133420	R4133420	R4166897	NR	-	-	R4577482[323]	R4577482

288 - Dayton Rotor with 6 Studs
302 - Power Brakes, Dual System
306 - Power Brakes, Single System
323 - 17.50" Length
339 - Use 69160441 for Disc Pad Retainer Clip

MAKE MODEL YEAR AXLE CODE AXLE WEIGHT	AXLE & BRK. TYPE	BRK. MFG.	BRAKE SIZE	FMSI	MERITOR DISC PAD OR BRAKE SHOE	MERITOR GUIDE PIN OR RETURN SPRING KIT	MERITOR CALIPER HWD. KIT OR RETURN SPRING KIT	MERITOR ADJUSTER KIT (LEFT WHEEL)	MERITOR ADJUSTER KIT (RIGHT WHEEL)
GMC / CHEV(Cont.)									
60, 6000 SERIES-20,000-27,500 lb. GVW (Cont.)									
1983 B6P042 School Bus 34DS, 34DT	TRm	WG	15 " x 6 "	4596 - 381	R700381	R40H597	R40H9200	R40H3518	R404148
	TRm	WG	15 " x 6 "	4596 - 381	R700381	R40H597	R40H9200	R40H3518	R404148
	TRm	WG	15 " x 6 "	4596 - 381	R700381	R40H597	R40H9200	R40H3518	R404148
	TRm	WG	15 " x 6 "	4596 - 381	R700381	R40H597	R40H9200	R40H3518	R404148
	TRm	WG	15 " x 6 "	4596 - 381	R700381	R40H597	R40H9200	R40H3518	R404148
	TRm	WG	15 " x 6 "	4596 - 381	R700381	R40H597	R40H9200	R40H3518	R404148
	TRm	WG	15 " x 6 "	4596 - 381	R700381	R40H597	R40H9200	R40H3518	R404148
	TRm	WG	15 " x 6 "	4596 - 381	R700381	R40H597	R40H9200	R40H3518	R404148
	TRm	WG	15 " x 6 "	4596 - 381	R700381	R40H597	R40H9200	R40H3518	R404148
	TRm	WG	15 " x 6 "	4596 - 381	R700381	R40H597	R40H9200	R40H3518	R404148
	TRm	WG	15 " x 6 "	4596 - 381	R700381	R40H597	R40H9200	R40H3518	R404148
	TRm	WG	15 " x 6 "	4596 - 381	R700381	R40H597	R40H9200	R40H3518	R404148
B6P042 School Bus F050, F055	Fa	GM	14 " x 2-1/2 "	2039 - 299	N/A	R40H599	R40H9206	R40H3500	R40H3501
	Fa	GM	14 " x 2-1/2 "	2039 - 299	N/A	R40H599	R40H9206	R40H3500	R40H3501
	Fa	GM	14 " x 2-1/2 "	2039 - 299	N/A	R40H599	R40H9206	R40H3500	R40H3501
	Fa	GM	14 " x 2-1/2 "	2039 - 299	N/A	R40H599	R40H9206	R40H3500	R40H3501
B6P042 School Bus F070	Fa	WG	15 " x 3 "	1245C - 321	R700321	R40H521	R40H9237	R40H3502	R40H3503
	Fa	WG	15 " x 3 "	1245C - 321	R700321	R40H521	R40H9237	R40H3502	R40H3503
	Fd	DN		7141 - D224	MD224[339]	69310693	60050153[277]	NR	NR
	Fd	DN		7141 - D224	MD224[339]	69310693	60050153[277]	NR	NR
	Fd	DN		7141 - D224	MD224[339]	69310693	60050153[277]	NR	NR
	Fm	WG	15 " x 3 "	1245A - 235	R700235	R40H521	R40H9201	R404132	R404132[279]
	Fm	WG	15 " x 3 "	1245A - 235	R700235	R40H521	R40H9201	R404132	R404132[279]
B6P042 School Bus F090	Fa	WG	15 " x 3-1/2 "	1280B - 322	R464004	R40H521	R40H9237	R40H3502	R40H3503
	Fa	WG	15 " x 3-1/2 "	1280B - 322	R464004	R40H521	R40H9237	R40H3502	R40H3503
	Fd	BX		7142 - D225	MD225	R40H5010	R40H5522	NR	NR
	Fm	WG	15 " x 3-1/2 "	1280 - 463	R700463	R40H521	R40H9201	R404132	R404132[279]
	Fm	WG	15 " x 3-1/2 "	1280 - 463	R700463	R40H521	R40H9201	R404132	R404132[279]
B6P042 School Bus H110, 135, 150	Ra	GM	15 " x 4 "	4640 - 427	R700427	R40H550	R404121	R40H3510	R40H3511
	Ra	GM	15 " x 4 "	4640 - 427	R700427	R40H550	R404121	R40H3510	R40H3511
B6P042 School Bus H150, T150, F106	Ra	GM	15 " x 5 "	4639 - 442	R700442	R40H550	R404121	R40H3510	R40H3511
	Ra	GM	15 " x 5 "	4639 - 442	R700442	R40H550	R404121	R40H3510	R40H3511
B6P042 School Bus H170, 175, T150, 175	Ra	WG	15 " x 6 "	4596 - 380	R700381	R40H597	R40H9200	R40H3540	R40H3541
	Ra	WG	15 " x 6 "	4596 - 380	R700381	R40H597	R40H9200	R40H3540	R40H3541
	Rm	WG	15 " x 6 "	4596 - 381	R700381	R40H597	R40H9200	R40H3518	R404148
	Rm	WG	15 " x 6 "	4596 - 381	R700381	R40H597	R40H9200	R40H3518	R404148
B6P042 School Bus H172, 16244	Ra	WG	15 " x 6 "	4596 - 381	R700381	R40H597	R40H9200	R40H3540	R40H3541
	Ra	WG	15 " x 6 "	4596 - 381	R700381	R40H597	R40H9200	R40H3540	R40H3541
B6P042 School Bus T170, 185, 17100, 17200, 17121, 17221	Ra	WG	15 " x 7 "	4597 - 383	R700383	R40H597	R40H9200	R40H3540	R40H3541
	Ra	WG	15 " x 7 "	4597 - 383	R700383	R40H597	R40H9200	R40H3540	R40H3541
	Rm	WG	15 " x 7 "	4597 - 382	R700383	R40H597	R40H9200	R40H3518	R404148
	Rm	WG	15 " x 7 "	4597 - 382	R700383	R40H597	R40H9200	R40H3518	R404148
C6D042, C6D064 Conventional 18121, 18221, 22121, 22221	Ra	WG	16 " x 6 "	1255 - 386	N/A	R40H597	R40H9200	-	-
	Rm	WG	16 " x 6 "	1255 - 386	N/A	R40H597	R40H9200	R404149	R404150
C6D042, C6D064 Conventional 34DS, 34DT	TRm	WG	15 " x 6 "	4596 - 381	R700381	R40H597	R40H9200	R40H3518	R404148
C6D042, C6D064 Conventional F090	Fm	WG	15 " x 3-1/2 "	1280 - 463	R700463	R40H521	R40H9201	R404132	R404132[279]

37 - Also available as a New unit
41 - Aluminum piston
277 - For Pad Retainer, Use 69160441
39 - First design, uses steel pistons.
266 - 10 Stud, Hat Shaped
279 - Has 2.29" Adjuster Studs, For 2.60" Studs Use E-4133
40 - For chrome plated steel version, use R4090070P
268 - 5 Stud, Hat Shape
287 - Budd rotor with 6 studs

MERITOR DRUM OR ROTOR NO.	CALIPER OR CYLINDER BORE SIZE	MERITOR CALIPER OR WHEEL CYLINDER (LEFT)	MERITOR CALIPER OR WHEEL CYLINDER (RIGHT)	MERITOR CALIPER OR WHEEL CYLINDER REPAIR KIT	MERITOR CALIPER PISTON	MERITOR MASTER CYLINDER	MERITOR MASTER CYLINDER KIT	MERITOR BRAKE HOSE (LEFT)	MERITOR BRAKE HOSE (RIGHT)
									GMC / CHEV(Cont.)
									60, 6000 SERIES-20,000-27,500 lb. GVW (Cont.)
N/A	1-5/8 "	R4133338	R4133338	R4166689	NR	-	-	-	-
N/A	1-5/8 "	R4133338	R4133338	R4166689	NR	-	-	-	-
N/A	1-5/8 "	R4133338	R4133338	R4166689	NR	-	-	-	-
N/A	1-5/8 "	R4133338	R4133338	R4166689	NR	-	-	-	-
N/A	1-5/8 "	R4133338	R4133338	R4166689	NR	-	-	-	-
N/A	1-5/8 "	R4133338	R4133338	R4166689	NR	-	-	-	-
N/A	1-5/8 "	R4133338	R4133338	R4166689	NR	-	-	-	-
N/A	1-5/8 "	R4133338	R4133338	R4166689	NR	-	-	-	-
N/A	1-5/8 "	R4133338	R4133338	R4166689	NR	-	-	R4577482[323]	R4577482
N/A	1-5/8 "	R4133338	R4133338	R4166689	NR	-	-	-	-
N/A	1-5/8 "	R4133338	R4133338	R4166689	NR	-	-	-	-
N/A	1-5/8 "	R4133338	R4133338	R4166689	NR	-	-	-	-
N/A	1-5/8 "	R4133338	R4133338	R4166689	NR	-	-	-	-
N/A	7/8 "	R4133406	R4133407	R4166820	NR	R4111993[302]	R4122386	R4577495	R4577495
N/A	7/8 "	R4133406	R4133407	R4166820	NR	R4111993[302]	R4122386	-	-
N/A	1-1/8 "	R4133320	R4133321	R415194	NR	R4111993[302]	R4122386	R4577495	R4577495
N/A	1-1/8 "	R4133320	R4133321	R415194	NR	R4111993[302]	R4122386	R4577495	R4577495
N/A	1-1/8 "	R4133320	R4133321	R4166926	NR	R4111993[302]	R4122386	-	-
N/A	1-1/8 "	R4133320	R4133321	R4166926	NR	R4111993[302]	R4122386	R4577495	R4577495
23-123468-002[288]	2-1/2 "	R424244X	R424244X[37]	60050266	69270757[41]	R4111993[302]	R4122386	R4577495	R4577495
23-123486-002[268]	2-1/2 "	R424244X	R424244X[37]	60050266	69270757[41]	R4111993[302]	R4122386	R4577495	R4577495
R44141583[287]	2-1/2 "	R424244X	R424244X[37]	60050266	69270757[41]	R4111993[302]	R4122386	R4577495	R4577495
N/A	1-1/8 "	R4133320	R4133321	R4166926	NR	R4111993[302]	R4122386	-	-
N/A	1-1/8 "	R4133320	R4133321	R4166926	NR	R4111993[302]	R4122386	R4577495	R4577495
N/A	1-1/4 "	R4133376	R4133377	R4166923	NR	R4111993[302]	R4122386	-	-
N/A	1-1/4 "	R4133376	R4133377	R4166923	NR	R4111993[302]	R4122386	R4577495	R4577495
23-122729-002[266]	2-7/8 "	R429218X	R429218X[39]	R406532	R4090070[40]	R4111993[302]	R4122386	R4577495	R4577495
N/A	1-1/4 "	R4133376	R4133377	R4166923	NR	R4111993[302]	R4122386	-	-
N/A	1-1/4 "	R4133376	R4133377	R4166923	NR	R4111993[302]	R4122386	R4577495	R4577495
N/A	1-1/2 "	R4133655	R4133656	R415194	NR	-	-	-	-
N/A	1-1/2 "	R4133655	R4133656	R415194	NR	-	-	R4577482[323]	R4577482
N/A	1-1/2 "	R4133655	R4133656	R415194	NR	-	-	R4577482[323]	R4577482
N/A	1-1/2 "	R4133655	R4133656	R415194	NR	-	-	-	-
N/A	1-5/8 "	R4133338	R4133338	R4166689	NR	-	-	-	-
N/A	1-5/8 "	R4133338	R4133338	R4166689	NR	-	-	R4577482[323]	R4577482
N/A	1-5/8 "	R4133338	R4133338	R4166689	NR	-	-	-	-
N/A	1-5/8 "	R4133338	R4133338	R4166689	NR	-	-	R4577482[323]	R4577482
N/A	1-5/8 "	R4133338	R4133338	R4166689	NR	-	-	-	-
N/A	1-5/8 "	R4133338	R4133338	R4166689	NR	-	-	R4577482[323]	R4577482
N/A	1-3/4 "	R4133400	R4133400	R4166917	NR	-	-	R4577482[323]	R4577482
N/A	1-3/4 "	R4133400	R4133400	R4166917	NR	-	-	-	-
N/A	1-3/4 "	R4133400	R4133400	R4166917	NR	-	-	-	-
N/A	1-3/4 "	R4133400	R4133400	R4166917	NR	-	-	R4577482[323]	R4577482
N/A	1-7/8 "	R4133420	R4133420	R4166897	NR	-	-	-	-
N/A	1-7/8 "	R4133420	R4133420	R4166897	NR	-	-	-	-
N/A	1-5/8 "	R4133338	R4133338	R4166689	NR	-	-	-	-
N/A	1-1/4 "	R4133376	R4133377	R4166923	NR	-	-	-	-

288 - Dayton Rotor with 6 Studs
302 - Power Brakes, Dual System
323 - 17.50" Length
339 - Use 69160441 for Disc Pad Retainer Clip

MAKE MODEL YEAR AXLE CODE AXLE WEIGHT	AXLE & BRK. TYPE	BRK. MFG.	BRAKE SIZE	FMSI	MERITOR DISC PAD OR BRAKE SHOE	MERITOR GUIDE PIN OR RETURN SPRING KIT	MERITOR CALIPER HWD. KIT OR RETURN SPRING KIT	MERITOR ADJUSTER KIT (LEFT WHEEL)	MERITOR ADJUSTER KIT (RIGHT WHEEL)
GMC / CHEV(Cont.)									
60, 6000 SERIES-20,000-27,500 lb. GVW (Cont.)									
1983 C6D042, C6D064 Conventional H110, 135, 150	Ra	GM	15 " x 4 "	4640 - 427	R700427	R40H550	R404121	R40H3510	R40H3511
C6D042, C6D064 Conventional H150, T150, F106	Ra	GM	15 " x 5 "	4639 - 442	R700442	R40H550	R404121	R40H3510	R40H3511
C6D042, C6D064 Conventional H170, 175,	Ra	WG	15 " x 6 "	4596 - 381	R700381	R40H597	R40H9200	R40H3540	R40H3541
C6D042, C6D064 Conventional H172, 16244	Ra	WG	15 " x 6 "	4596 - 381	R700381	R40H597	R40H9200	R40H3540	R40H3541
C6D042, C6D064 Conventional T150, 175	Rm	WG	15 " x 6 "	4596 - 380	R700381	R40H597	R40H9200	R40H3518	R404148
C6D042, C6D064 Conventional T170, 185, 17100, 17200, 17121, 17221	Ra	WG	15 " x 7 "	4597 - 383	R700383	R40H597	R40H9200	R40H3540	R40H3541
	Rm	WG	15 " x 7 "	4597 - 382	R700383	R40H597	R40H9200	R40H3518	R404148
C6D042, C6D064 Steel Conventional F050, F055	Fa	GM	14 " x 2-1/2 "	2039 - 299	N/A	R40H599	R40H9206	R40H3500	R40H3501
C6D042, C6D064 Steel Conventional F090	Fa	WG	15 " x 3-1/2 "	1280B - 322	R464004	R40H521	R40H9237	R40H3502	R40H3503
F050, F055	Fa	GM	14 " x 2-1/2 "	2039 - 299	N/A	R40H599	R40H9206	R40H3500	R40H3501
F070	Fa	WG	15 " x 3 "	1245C - 321	R700321	R40H521	R40H9237	R40H3502	R40H3503
	Fm	WG	15 " x 3 "	1245A - 235	R700235	R40H521	R40H9201	R404132	R404132[279]
F090	Fa	WG	15 " x 3-1/2 "	1280B - 322	R464004	R40H521	R40H9237	R40H3502	R40H3503
H110, 135, 150	Ra	GM	15 " x 4 "	4640 - 427	R700427	R40H550	R404121	R40H3510	R40H3511
H150, T150, F106	Ra	GM	15 " x 5 "	4639 - 442	R700442	R40H550	R404121	R40H3510	R40H3511
H170, 175, T150, 175	Ra	WG	15 " x 6 "	4596 - 380	R700381	R40H597	R40H9200	R40H3540	R40H3541
	Rm	WG	15 " x 6 "	4596 - 381	R700381	R40H597	R40H9200	R40H3518	R404148
H172, 16244	Ra	WG	15 " x 6 "	4596 - 381	R700381	R40H597	R40H9200	R40H3540	R40H3541
P6T042 18121, 18221, 22121, 22221	Ra	WG	16 " x 6 "	1255 - 386	N/A	R40H597	R40H9200	-	-
	Rm	WG	16 " x 6 "	1255 - 386	N/A	R40H597	R40H9200	R404149	R404150
P6T042 34DS, 34DT	TRm	WG	15 " x 6 "	4596 - 381	R700381	R40H597	R40H9200	R40H3518	R404148
P6T042 F050, F055	Fa	GM	14 " x 2-1/2 "	2039 - 299	N/A	R40H599	R40H9206	R40H3500	R40H3501
	Fa	GM	14 " x 2-1/2 "	2039 - 299	N/A	R40H599	R40H9206	R40H3500	R40H3501
P6T042 F090	Fa	WG	15 " x 3-1/2 "	1280B - 322	R464004	R40H521	R40H9237	R40H3502	R40H3503
	Fa	WG	15 " x 3-1/2 "	1280B - 322	R464004	R40H521	R40H9237	R40H3502	R40H3503
	Fm	WG	15 " x 3-1/2 "	1280 - 463	R700463	R40H521	R40H9201	R404132	R404132[279]
	Fm	WG	15 " x 3-1/2 "	1280 - 463	R700463	R40H521	R40H9201	R404132	R404132[279]
P6T042 H110, 135, 150	Ra	GM	15 " x 4 "	4640 - 427	R700427	R40H550	R404121	R40H3510	R40H3511
P6T042 H170, 175,	Ra	WG	15 " x 6 "	4596 - 381	R700381	R40H597	R40H9200	R40H3540	R40H3541
P6T042 T150, 175	Rm	WG	15 " x 6 "	4596 - 380	R700381	R40H597	R40H9200	R40H3518	R404148
P6T042 T170, 185, 17100, 17200, 17121, 17221	Ra	WG	15 " x 7 "	4597 - 383	R700383	R40H597	R40H9200	R40H3540	R40H3541
	Rm	WG	15 " x 7 "	4597 - 382	R700383	R40H597	R40H9200	R40H3518	R404148
T170, 185, 17100, 17200, 17121, 17221	Rm	WG	15 " x 7 "	4597 - 382	R700383	R40H597	R40H9200	R40H3518	R404148
T185, 17100, 17200	Ra	WG	15 " x 7 "	4597 - 383	R700383	R40H597	R40H9200	R40H3540	R40H3541
5,000 lb.	Fa	GM	14 " x 2-1/2 "	2039 - 299	N/A	R40H599	R40H9206	R40H3500	R40H3501

279 - Has 2.29" Adjuster Studs, For 2.60" Studs Use E-4133 302 - Power Brakes, Dual System 323 - 17.50" Length

MERITOR DRUM OR ROTOR NO.	CALIPER OR CYLINDER BORE SIZE	MERITOR CALIPER OR WHEEL CYLINDER (LEFT)	MERITOR CALIPER OR WHEEL CYLINDER (RIGHT)	MERITOR CALIPER OR WHEEL CYLINDER REPAIR KIT	MERITOR CALIPER PISTON	MERITOR MASTER CYLINDER	MERITOR MASTER CYLINDER KIT	MERITOR BRAKE HOSE (LEFT)	MERITOR BRAKE HOSE (RIGHT)
GMC / CHEV(Cont.)									
60, 6000 SERIES-20,000-27,500 lb. GVW (Cont.)									
N/A	1-1/2 "	R4133655	R4133656	R415194	NR	-	-	-	-
N/A	1-1/2 "	R4133655	R4133656	R415194	NR	-	-	-	-
N/A	1-5/8 "	R4133338	R4133338	R4166689	NR	-	-	-	-
N/A	1-5/8 "	R4133338	R4133338	R4166689	NR	-	-	-	-
N/A	1-5/8 "	R4133338	R4133338	R4166689	NR	-	-	-	-
N/A	1-3/4 "	R4133400	R4133400	R4166917	NR	-	-	-	-
N/A	1-3/4 "	R4133400	R4133400	R4166917	NR	-	-	-	-
N/A	7/8 "	R4133406	R4133407	R4166820	NR	-	-	-	-
N/A	1-1/4 "	R4133376	R4133377	R4166923	NR	-	-	-	-
N/A	7/8 "	R4133406	R4133407	R4166820	NR	-	-	-	-
N/A	1-1/8 "	R4133320	R4133321	R4166926	NR	-	-	-	-
N/A	1-1/8 "	R4133320	R4133321	R4166926	NR	-	-	-	-
N/A	1-1/4 "	R4133376	R4133377	R4166923	NR	-	-	-	-
N/A	1-1/2 "	R4133655	R4133656	R415194	NR	-	-	R4577482[323]	R4577482
N/A	1-1/2 "	R4133655	R4133656	R415194	NR	-	-	R4577482[323]	R4577482
N/A	1-5/8 "	R4133338	R4133338	R4166689	NR	-	-	R4577482[323]	R4577482
N/A	1-5/8 "	R4133338	R4133338	R4166689	NR	-	-	-	-
N/A	1-5/8 "	R4133338	R4133338	R4166689	NR	-	-	R4577482[323]	R4577482
N/A	1-7/8 "	R4133420	R4133420	R4166897	NR	-	-	-	-
N/A	1-7/8 "	R4133420	R4133420	R4166897	NR	-	-	-	-
N/A	1-5/8 "	R4133338	R4133338	R4166689	NR	-	-	-	-
N/A	7/8 "	R4133406	R4133407	R4166820	NR	R4111993[302]	R4122386	-	-
N/A	7/8 "	R4133406	R4133407	R4166820	NR	R4111993[302]	R4122386	-	-
N/A	1-1/4 "	R4133376	R4133377	R4166923	NR	R4111993[302]	R4122386	-	-
N/A	1-1/4 "	R4133376	R4133377	R4166923	NR	R4111993[302]	R4122386	-	-
N/A	1-1/4 "	R4133376	R4133377	R4166923	NR	R4111993[302]	R4122386	-	-
N/A	1-1/4 "	R4133376	R4133377	R4166923	NR	R4111993[302]	R4122386	-	-
N/A	1-1/2 "	R4133655	R4133656	R415194	NR	-	-	-	-
N/A	1-5/8 "	R4133338	R4133338	R4166689	NR	-	-	-	-
N/A	1-5/8 "	R4133338	R4133338	R4166689	NR	-	-	-	-
N/A	1-3/4 "	R4133400	R4133400	R4166917	NR	-	-	-	-
N/A	1-3/4 "	R4133400	R4133400	R4166917	NR	-	-	-	-
N/A	1-3/4 "	R4133400	R4133400	R4166917	NR	-	-	-	-
N/A	1-3/4 "	R4133400	R4133400	R4166917	NR	-	-	R4577482[323]	R4577482
N/A	1-1/8 "	R4133320	R4133321	R415194	NR	-	-	-	-

MAKE MODEL YEAR AXLE CODE AXLE WEIGHT	AXLE & BRK. TYPE	BRK. MFG.	BRAKE SIZE	FMSI	MERITOR DISC PAD OR BRAKE SHOE	MERITOR GUIDE PIN OR RETURN SPRING KIT	MERITOR CALIPER HWD. KIT OR RETURN SPRING KIT	MERITOR ADJUSTER KIT (LEFT WHEEL)	MERITOR ADJUSTER KIT (RIGHT WHEEL)
GMC / CHEV(Cont.)									
60, 6000 SERIES-20,000-27,500 lb. GVW (Cont.)									
1983	Fa	GM	14 " x 2-1/2 "	2039 - 299	N/A	R40H599	R40H9206	R40H3500	R40H3501
C6D042, C6D064 Conventional 6,000, 7,000lb. GVW	Fm	WG	15 " x 3 "	1245A - 235	R700235	R40H521	R40H9201	R404132	R404132[279]
C6D042, C6D064 Steel Conventional 6,000, 7,000lb. GVW	Fa	WG	15 " x 3 "	1245C - 321	R700321	R40H521	R40H9237	R40H3502	R40H3503
P6T042 6,000, 7,000lb. GVW	Fa	WG	15 " x 3 "	1245C - 321	R700321	R40H521	R40H9237	R40H3502	R40H3503
	Fa	WG	15 " x 3 "	1245C - 321	R700321	R40H521	R40H9237	R40H3502	R40H3503
	Fm	WG	15 " x 3 "	1245A - 235	R700235	R40H521	R40H9201	R404132	R404132[279]
	Fm	WG	15 " x 3 "	1245A - 235	R700235	R40H521	R40H9201	R404132	R404132[279]
C6D042, C6D064 Conventional 7,000 lb.	Fd	DN		7141 - D224	MD224[339]	69310693	60050153[277]	NR	NR
	Fd	DN		7141 - D224	MD224[339]	69310693	60050153[277]	NR	NR
	Ra	GM	15 " x 5 "	4639 - 442	R700442	R40H550	R404121	R40H3510	R40H3511
	Ra	GM	15 " x 5 "	4639 - 442	R700442	R40H550	R404121	R40H3510	R40H3511
	Rd	BX		7142 - D225	MD225	R40H5010	R40H5522	NR	NR
	Rd	BX		7142 - D225	MD225	R40H5010	R40H5522	NR	NR
P6T042 7,000 lb.	Fd	DN		7141 - D224	MD224[339]	69310693	60050153[277]	NR	NR
	Fd	DN		7141 - D224	MD224[339]	69310693	60050153[277]	NR	NR
	Ra	GM	15 " x 5 "	4639 - 442	R700442	R40H550	R404121	R40H3510	R40H3511
	Rd	BX		7142 - D225	MD225	R40H5010	R40H5522	NR	NR
B6P042 School Bus 15,000 lb. GVW	Ra	GM	15 " x 5 "	4639 - 442	R700442	R40H550	R404121	R40H3510	R40H3511
	Ra	GM	15 " x 5 "	4639 - 442	R700442	R40H550	R404121	R40H3510	R40H3511
	Rd	DN		7141 - D224	MD224[339]	69310693	60050153[277]	NR	NR
	Rd	DN		7141 - D224	MD224[339]	69310693	60050153[277]	NR	NR
B6P042 School Bus 16,000, 17,000, 19,000lb. GVW	Rd	BX		7142 - D225	MD225	R40H5010	R40H5522	NR	NR
1982 F090	Fm	WG	15 " x 3-1/2 "	1280 - 463	R700463	R40H521	R40H9201	R404132	R404132[279]
18121, 18221	Rm	WG	16 " x 6 "	1255 - 386	N/A	R40H597	R40H9200	R404149	R404150
22121, 22221	Ra	WG	16 " x 6 "	1255 - 386	N/A	R40H597	R40H9200	-	-
B6P042 School Bus 18121, 18221	Rm	WG	16 " x 6 "	1255 - 386	N/A	R40H597	R40H9200	R404149	R404150
B6P042 School Bus 22121, 22221	Ra	WG	16 " x 6 "	1255 - 386	N/A	R40H597	R40H9200	-	-
	Ra	WG	16 " x 6 "	1255 - 386	N/A	R40H597	R40H9200	-	-
B6P042 School Bus 34DS, 34DT	TRm	WG	15 " x 6 "	4596 - 381	R700381	R40H597	R40H9200	R40H3518	R404148
B6P042 School Bus F050, F055	Fa	GM	14 " x 2-1/2 "	2039 - 299	N/A	R40H599	R40H9206	R40H3500	R40H3501
B6P042 School Bus F070	Fa	WG	15 " x 3 "	1245C - 321	R700321	R40H521	R40H9237	R40H3502	R40H3503
	Fa	WG	15 " x 3 "	1245C - 321	R700321	R40H521	R40H9237	R40H3502	R40H3503
	Fm	WG	15 " x 3 "	1245A - 235	R700235	R40H521	R40H9201	R404132	R404132[279]
	Fm	WG	15 " x 3 "	1245A - 235	R700235	R40H521	R40H9201	R404132	R404132[279]
B6P042 School Bus F090	Fa	WG	15 " x 3-1/2 "	1280B - 322	R464004	R40H521	R40H9237	R40H3502	R40H3503
	Fm	WG	15 " x 3-1/2 "	1280 - 463	R700463	R40H521	R40H9201	R404132	R404132[279]
B6P042 School Bus H110, 135, 150	Ra	GM	15 " x 4 "	4640 - 427	R700427	R40H550	R404121	R40H3510	R40H3511
B6P042 School Bus H150, T150, F106	Ra	GM	15 " x 5 "	4639 - 442	R700442	R40H550	R404121	R40H3510	R40H3511
B6P042 School Bus H170, 175, T150, 175	Ra	WG	15 " x 6 "	4596 - 380	R700381	R40H597	R40H9200	R40H3540	R40H3541
	Rm	WG	15 " x 6 "	4596 - 381	R700381	R40H597	R40H9200	R40H3518	R404148
B6P042 School Bus H172, 16244	Ra	WG	15 " x 6 "	4596 - 381	R700381	R40H597	R40H9200	R40H3540	R40H3541

37 - Also available as a New unit
41 - Aluminum piston
277 - For Pad Retainer, Use 69160441
39 - First design, uses steel pistons.
266 - 10 Stud, Hat Shaped
279 - Has 2.29" Adjuster Studs, For 2.60" Studs Use E-4133
40 - For chrome plated steel version, use R4090070P
268 - 5 Stud, Hat Shape
288 - Dayton Rotor with 6 Studs

MERITOR DRUM OR ROTOR NO.	CALIPER OR CYLINDER BORE SIZE	MERITOR CALIPER OR WHEEL CYLINDER (LEFT)	MERITOR CALIPER OR WHEEL CYLINDER (RIGHT)	MERITOR CALIPER OR WHEEL CYLINDER REPAIR KIT	MERITOR CALIPER PISTON	MERITOR MASTER CYLINDER	MERITOR MASTER CYLINDER KIT	MERITOR BRAKE HOSE (LEFT)	MERITOR BRAKE HOSE (RIGHT)
GMC / CHEV(Cont.)									
60, 6000 SERIES-20,000-27,500 lb. GVW (Cont.)									
N/A	1-1/4 "	R4133320	R4133321	R415194	NR	-	-	-	-
N/A	1-1/8 "	R4133320	R4133321	R4166926	NR	-	-	-	-
N/A	1-1/8 "	R4133320	R4133321	R4166926	NR	R4111993[306]	R4122386	-	-
N/A	1-1/8 "	R4133320	R4133321	R4166926	NR	R4111993[302]	R4122386	-	-
N/A	1-1/8 "	R4133320	R4133321	R4166926	NR	R4111993[302]	R4122386	-	-
N/A	1-1/8 "	R4133320	R4133321	R4166926	NR	R4111993[302]	R4122386	-	-
N/A	1-1/8 "	R4133320	R4133321	R4166926	NR	R4111993[302]	R4122386	-	-
23-123486-002[268]	2-1/2 "	R424244X	R424244X[37]	60050266	69270757[41]	-	-	-	-
23-123486-002[268]	2-1/2 "	R424244X	R424244X[37]	60050266	69270757[41]	-	-	-	-
N/A	1-1/2 "	R4133655	R4133656	R415194	NR	-	-	R4577482[323]	R4577482
N/A	1-1/2 "	R4133655	R4133656	R415194	NR	-	-	R4577482[323]	R4577482
23-122729-002[266]	2-7/8 "	R429218X	R429218X[39]	R406532	R4090070[40]	-	-	-	-
23-122729-002[266]	2-7/8 "	R429218X	R429218X[39]	R406532	R4090070[40]	-	-	-	-
23-123486-002[268]	2-1/2 "	R424244X	R424244X[37]	60050266	69270757[41]	R4111993[302]	R4122386	R4577495	R4577495
23-123486-002[268]	2-1/2 "	R424244X	R424244X[37]	60050266	69270757[41]	R4111993[302]	R4122386	R4577484	R4577484
N/A	1-1/2 "	R4133655	R4133656	R415194	NR	-	-	R4577482[323]	R4577482
23-122729-002[266]	2-7/8 "	R429218X	R429218X[39]	R406532	R4090070[40]	-	-	R4577482[323]	R4577482
N/A	1-1/2 "	R4133655	R4133656	R415194	NR	-	-	R4577482[323]	R4577482
N/A	1-1/2 "	R4133655	R4133656	R415194	NR	-	-	R4577482[323]	R4577482
23-123486-002[268]	2-1/2 "	R424244X	R424244X[37]	60050266	69270757[41]	-	-	R4577482[323]	R4577482
23-123468-002[288]	2-1/2 "	R424244X	R424244X[37]	60050266	69270757[41]	-	-	R4577482[323]	R4577482
23-122729-002[266]	2-7/8 "	R429218X	R429218X[39]	R406532	R4090070[40]	-	-	R4577482[323]	R4577482
N/A	1-1/4 "	R4133376	R4133377	R4166923	NR	-	-	-	-
N/A	1-7/8 "	R4133420	R4133420	R4166897	NR	-	-	-	-
N/A	1-7/8 "	R4133420	R4133420	R4166897	NR	-	-	-	-
N/A	1-7/8 "	R4133420	R4133420	R4166897	NR	-	-	-	-
N/A	1-7/8 "	R4133420	R4133420	R4166897	NR	-	-	-	-
N/A	1-7/8 "	R4133420	R4133420	R4166897	NR	-	-	-	-
N/A	1-5/8 "	R4133338	R4133338	R4166689	NR	-	-	-	-
N/A	7/8 "	R4133406	R4133407	R4166820	NR	-	-	-	-
N/A	1-1/4 "	R4133315	R4133316	R4166923	NR	-	-	-	-
N/A	1-1/8 "	R4133320	R4133321	R4166926	NR	-	-	-	-
N/A	1-1/4 "	R4133315	R4133316	R4166923	NR	-	-	-	-
N/A	1-1/8 "	R4133320	R4133321	R4166926	NR	-	-	-	-
N/A	1-1/4 "	R4133376	R4133377	R4166923	NR	-	-	-	-
N/A	1-1/4 "	R4133376	R4133377	R4166923	NR	-	-	-	-
N/A	1-1/2 "	R4133655	R4133656	R415194	NR	-	-	-	-
N/A	1-1/2 "	R4133655	R4133656	R415194	NR	-	-	-	-
N/A	1-5/8 "	R4133338	R4133338	R4166689	NR	-	-	-	-
N/A	1-5/8 "	R4133338	R4133338	R4166689	NR	-	-	-	-
N/A	1-5/8 "	R4133338	R4133338	R4166689	NR	-	-	-	-

302 - Power Brakes, Dual System
306 - Power Brakes, Single System
323 - 17.50" Length
339 - Use 69160441 for Disc Pad Retainer Clip

MAKE MODEL YEAR AXLE CODE AXLE WEIGHT	AXLE & BRK. TYPE	BRK. MFG.	BRAKE SIZE	FMSI	MERITOR DISC PAD OR BRAKE SHOE	MERITOR GUIDE PIN OR RETURN SPRING KIT	MERITOR CALIPER HWD. KIT OR RETURN SPRING KIT	MERITOR ADJUSTER KIT (LEFT WHEEL)	MERITOR ADJUSTER KIT (RIGHT WHEEL)
GMC / CHEV(Cont.)									
60, 6000 SERIES-20,000-27,500 lb. GVW (Cont.)									
1982 B6P042 School Bus T170, 185, 17100, 17200, 17121, 17221	Ra	WG	15 " x 7 "	4597 - 383	R700383	R40H597	R40H9200	R40H3540	R40H3541
	Rm	WG	15 " x 7 "	4597 - 382	R700383	R40H597	R40H9200	R40H3518	R404148
F050, F055	Fa	GM	14 " x 2-1/2 "	2039 - 299	N/A	R40H599	R40H9206	R40H3500	R40H3501
F070	Fa	WG	15 " x 3 "	1245C - 321	R700321	R40H521	R40H9237	R40H3502	R40H3503
	Fm	WG	15 " x 3 "	1245A - 235	R700235	R40H521	R40H9201	R404132	R404132[279]
F090	Fa	WG	15 " x 3-1/2 "	1280B - 322	R464004	R40H521	R40H9237	R40H3502	R40H3503
H110, 135, 150	Ra	GM	15 " x 4 "	4640 - 427	R700427	R40H550	R404121	R40H3510	R40H3511
H150, T150, F106	Ra	GM	15 " x 5 "	4639 - 442	R700442	R40H550	R404121	R40H3510	R40H3511
H170, 175, T150, 175	Ra	WG	15 " x 6 "	4596 - 380	R700381	R40H597	R40H9200	R40H3540	R40H3541
	Rm	WG	15 " x 6 "	4596 - 381	R700381	R40H597	R40H9200	R40H3518	R404148
H172, 16244	Ra	WG	15 " x 6 "	4596 - 381	R700381	R40H597	R40H9200	R40H3540	R40H3541
T170, 185, 17100, 17200, 17121, 17221	Rm	WG	15 " x 7 "	4597 - 382	R700383	R40H597	R40H9200	R40H3518	R404148
T185, 17100, 17200	Ra	WG	15 " x 7 "	4597 - 383	R700383	R40H597	R40H9200	R40H3540	R40H3541
1981 F090	Fm	WG	15 " x 3-1/2 "	1280 - 463	R700463	R40H521	R40H9201	R404132	R404132[279]
18121, 18221	Rm	WG	16 " x 6 "	1255 - 386	N/A	R40H597	R40H9200	R404149	R404150
22121, 22221	Ra	WG	16 " x 6 "	1255 - 386	N/A	R40H597	R40H9200	-	-
B6P042 School Bus 18121, 18221	Rm	WG	16 " x 6 "	1255 - 386	N/A	R40H597	R40H9200	R404149	R404150
B6P042 School Bus 22121, 22221	Ra	WG	16 " x 6 "	1255 - 386	N/A	R40H597	R40H9200	-	-
	Ra	WG	16 " x 6 "	1255 - 386	N/A	R40H597	R40H9200	-	-
B6P042 School Bus 34DS, 34DT	TRm	WG	15 " x 6 "	4596 - 381	R700381	R40H597	R40H9200	R40H3518	R404148
B6P042 School Bus F050, F055	Fa	GM	14 " x 2-1/2 "	2039 - 299	N/A	R40H599	R40H9206	R40H3500	R40H3501
	Fa	GM	14 " x 2-1/2 "	2039 - 299	N/A	R40H599	R40H9206	R40H3500	R40H3501
B6P042 School Bus F070	Fa	WG	15 " x 3 "	1245C - 321	R700321	R40H521	R40H9237	R40H3502	R40H3503
	Fa	WG	15 " x 3 "	1245C - 321	R700321	R40H521	R40H9237	R40H3502	R40H3503
	Fa	WG	15 " x 3 "	1245C - 321	R700321	R40H521	R40H9237	R40H3502	R40H3503
	Fm	WG	15 " x 3 "	1245A - 235	R700235	R40H521	R40H9201	R404132	R404132[279]
	Fm	WG	15 " x 3 "	1245A - 235	R700235	R40H521	R40H9201	R404132	R404132[279]
B6P042 School Bus F090	Fa	WG	15 " x 3-1/2 "	1280B - 322	R464004	R40H521	R40H9237	R40H3502	R40H3503
	Fa	WG	15 " x 3-1/2 "	1280B - 322	R464004	R40H521	R40H9237	R40H3502	R40H3503
	Fm	WG	15 " x 3-1/2 "	1280 - 463	R700463	R40H521	R40H9201	R404132	R404132[279]
B6P042 School Bus H110, 135, 150	Ra	GM	15 " x 4 "	4640 - 427	R700427	R40H550	R404121	R40H3510	R40H3511
B6P042 School Bus H150, T150, F106	Ra	GM	15 " x 5 "	4639 - 442	R700442	R40H550	R404121	R40H3510	R40H3511
B6P042 School Bus H170, 175, T150, 175	Ra	WG	15 " x 6 "	4596 - 380	R700381	R40H597	R40H9200	R40H3540	R40H3541
	Rm	WG	15 " x 6 "	4596 - 381	R700381	R40H597	R40H9200	R40H3518	R404148
B6P042 School Bus H172, 16244	Ra	WG	15 " x 6 "	4596 - 381	R700381	R40H597	R40H9200	R40H3540	R40H3541
B6P042 School Bus T170, 185, 17100, 17200, 17121, 17221	Ra	WG	15 " x 7 "	4597 - 383	R700383	R40H597	R40H9200	R40H3540	R40H3541
	Rm	WG	15 " x 7 "	4597 - 382	R700383	R40H597	R40H9200	R40H3518	R404148
F070	Fm	WG	15 " x 3 "	1245A - 235	R700235	R40H521	R40H9201	R404132	R404132[279]
H110, 135, 150	Ra	GM	15 " x 4 "	4640 - 427	R700427	R40H550	R404121	R40H3510	R40H3511
H150, T150, F106	Ra	GM	15 " x 5 "	4639 - 442	R700442	R40H550	R404121	R40H3510	R40H3511
H170, 175, T150, 175	Ra	WG	15 " x 6 "	4596 - 380	R700381	R40H597	R40H9200	R40H3540	R40H3541
	Rm	WG	15 " x 6 "	4596 - 381	R700381	R40H597	R40H9200	R40H3518	R404148
H172, 16244	Ra	WG	15 " x 6 "	4596 - 381	R700381	R40H597	R40H9200	R40H3540	R40H3541
T170, 185, 17100, 17200, 17121, 17221	Rm	WG	15 " x 7 "	4597 - 382	R700383	R40H597	R40H9200	R40H3518	R404148
T185, 17100, 17200	Ra	WG	15 " x 7 "	4597 - 383	R700383	R40H597	R40H9200	R40H3540	R40H3541

279 - Has 2.29" Adjuster Studs, For 2.60" Studs Use E-4133

MERITOR DRUM OR ROTOR NO.	CALIPER OR CYLINDER BORE SIZE	MERITOR CALIPER OR WHEEL CYLINDER (LEFT)	MERITOR CALIPER OR WHEEL CYLINDER (RIGHT)	MERITOR CALIPER OR WHEEL CYLINDER REPAIR KIT	MERITOR CALIPER PISTON	MERITOR MASTER CYLINDER	MERITOR MASTER CYLINDER KIT	MERITOR BRAKE HOSE (LEFT)	MERITOR BRAKE HOSE (RIGHT)
GMC / CHEV(Cont.)									
60, 6000 SERIES-20,000-27,500 lb. GVW (Cont.)									
N/A	1-3/4 "	R4133400	R4133400	R4166917	NR	-	-	-	-
N/A	1-3/4 "	R4133400	R4133400	R4166917	NR	-	-	-	-
N/A	7/8 "	R4133406	R4133407	R4166820	NR	-	-	-	-
N/A	1-1/8 "	R4133320	R4133321	R4166926	NR	-	-	-	-
N/A	1-1/8 "	R4133320	R4133321	R4166926	NR	-	-	-	-
N/A	1-1/4 "	R4133376	R4133377	R4166923	NR	-	-	-	-
N/A	1-1/2 "	R4133655	R4133656	R415194	NR	-	-	-	-
N/A	1-1/2 "	R4133655	R4133656	R415194	NR	-	-	-	-
N/A	1-5/8 "	R4133338	R4133338	R4166689	NR	-	-	-	-
N/A	1-5/8 "	R4133338	R4133338	R4166689	NR	-	-	-	-
N/A	1-5/8 "	R4133338	R4133338	R4166689	NR	-	-	-	-
N/A	1-3/4 "	R4133400	R4133400	R4166917	NR	-	-	-	-
N/A	1-3/4 "	R4133400	R4133400	R4166917	NR	-	-	-	-
N/A	1-1/4 "	R4133376	R4133377	R4166923	NR	-	-	-	-
N/A	1-7/8 "	R4133420	R4133420	R4166897	NR	-	-	-	-
N/A	1-7/8 "	R4133420	R4133420	R4166897	NR	-	-	-	-
N/A	1-7/8 "	R4133420	R4133420	R4166897	NR	-	-	-	-
N/A	1-7/8 "	R4133420	R4133420	R4166897	NR	-	-	-	-
N/A	1-7/8 "	R4133420	R4133420	R4166897	NR	-	-	-	-
N/A	1-5/8 "	R4133338	R4133338	R4166689	NR	-	-	-	-
N/A	7/8 "	R4133406	R4133407	R4166820	NR	-	-	-	-
N/A	7/8 "	R4133406	R4133407	R4166820	NR	-	-	-	-
N/A	1-1/8 "	R4133320	R4133321	R4166926	NR	-	-	-	-
N/A	1-1/4 "	R4133315	R4133316	R4166923	NR	-	-	-	-
N/A	1-1/8 "	R4133320	R4133321	R4166926	NR	-	-	-	-
N/A	1-1/8 "	R4133320	R4133321	R4166926	NR	-	-	-	-
N/A	1-1/4 "	R4133315	R4133316	R4166923	NR	-	-	-	-
N/A	1-1/4 "	R4133376	R4133377	R4166923	NR	-	-	-	-
N/A	1-1/4 "	R4133376	R4133377	R4166923	NR	-	-	-	-
N/A	1-1/4 "	R4133376	R4133377	R4166923	NR	-	-	-	-
N/A	1-1/2 "	R4133655	R4133656	R415194	NR	-	-	-	-
N/A	1-1/2 "	R4133655	R4133656	R415194	NR	-	-	-	-
N/A	1-5/8 "	R4133338	R4133338	R4166689	NR	-	-	-	-
N/A	1-5/8 "	R4133338	R4133338	R4166689	NR	-	-	-	-
N/A	1-5/8 "	R4133338	R4133338	R4166689	NR	-	-	-	-
N/A	1-3/4 "	R4133400	R4133400	R4166917	NR	-	-	-	-
N/A	1-3/4 "	R4133400	R4133400	R4166917	NR	-	-	-	-
N/A	1-1/8 "	R4133320	R4133321	R4166926	NR	-	-	-	-
N/A	1-1/2 "	R4133655	R4133656	R415194	NR	-	-	-	-
N/A	1-1/2 "	R4133655	R4133656	R415194	NR	-	-	-	-
N/A	1-5/8 "	R4133338	R4133338	R4166689	NR	-	-	-	-
N/A	1-5/8 "	R4133338	R4133338	R4166689	NR	-	-	-	-
N/A	1-5/8 "	R4133338	R4133338	R4166689	NR	-	-	-	-
N/A	1-3/4 "	R4133400	R4133400	R4166917	NR	-	-	-	-
N/A	1-3/4 "	R4133400	R4133400	R4166917	NR	-	-	-	-

MAKE MODEL YEAR AXLE CODE AXLE WEIGHT	AXLE & BRK. TYPE	BRK. MFG.	BRAKE SIZE	FMSI	MERITOR DISC PAD OR BRAKE SHOE	MERITOR GUIDE PIN OR RETURN SPRING KIT	MERITOR CALIPER HWD. KIT OR RETURN SPRING KIT	MERITOR ADJUSTER KIT (LEFT WHEEL)	MERITOR ADJUSTER KIT (RIGHT WHEEL)
GMC / CHEV(Cont.)									
60, 6000 SERIES-20,000-27,500 lb. GVW									
1980									
F090	Fm	WG	15 " x 3-1/2 "	1280 - 463	R700463	R40H521	R40H9201	R404132	R404132[279]
18121, 18221	Rm	WG	16 " x 6 "	1255 - 386	N/A	R40H597	R40H9200	R404149	R404150
22121, 22221	Ra	WG	16 " x 6 "	1255 - 386	N/A	R40H597	R40H9200	-	-
B6P042 School Bus 18121, 18221	Rm	WG	16 " x 6 "	1255 - 386	N/A	R40H597	R40H9200	R404149	R404150
B6P042 School Bus 22121, 22221	Ra	WG	16 " x 6 "	1255 - 386	N/A	R40H597	R40H9200	-	-
	Ra	WG	16 " x 6 "	1255 - 386	N/A	R40H597	R40H9200	-	-
B6P042 School Bus 34DS, 34DT	TRm	WG	15 " x 6 "	4596 - 381	R700381	R40H597	R40H9200	R40H3518	R404148
B6P042 School Bus F050, F055	Fa	GM	14 " x 2-1/2 "	2039 - 299	N/A	R40H599	R40H9206	R40H3500	R40H3501
B6P042 School Bus F070	Fa	WG	15 " x 3 "	1245C - 321	R700321	R40H521	R40H9237	R40H3502	R40H3503
	Fa	WG	15 " x 3 "	1245C - 321	R700321	R40H521	R40H9237	R40H3502	R40H3503
	Fm	WG	15 " x 3 "	1245A - 235	R700235	R40H521	R40H9201	R404132	R404132[279]
	Fm	WG	15 " x 3 "	1245A - 235	R700235	R40H521	R40H9201	R404132	R404132[279]
B6P042 School Bus F090	Fa	WG	15 " x 3-1/2 "	1280B - 322	R464004	R40H521	R40H9237	R40H3502	R40H3503
	Fm	WG	15 " x 3-1/2 "	1280 - 463	R700463	R40H521	R40H9201	R404132	R404132[279]
B6P042 School Bus H110, 135, 150	Ra	GM	15 " x 4 "	4640 - 427	R700427	R40H550	R404121	R40H3510	R40H3511
B6P042 School Bus H150, T150, F106	Ra	GM	15 " x 5 "	4639 - 442	R700442	R40H550	R404121	R40H3510	R40H3511
B6P042 School Bus H170, 175, T150, 175	Ra	WG	15 " x 6 "	4596 - 380	R700381	R40H597	R40H9200	R40H3540	R40H3541
	Rm	WG	15 " x 6 "	4596 - 381	R700381	R40H597	R40H9200	R40H3518	R404148
B6P042 School Bus H172, 16244	Ra	WG	15 " x 6 "	4596 - 381	R700381	R40H597	R40H9200	R40H3540	R40H3541
B6P042 School Bus T170, 185, 17100, 17200, 17121, 17221	Ra	WG	15 " x 7 "	4597 - 383	R700383	R40H597	R40H9200	R40H3540	R40H3541
	Rm	WG	15 " x 7 "	4597 - 382	R700383	R40H597	R40H9200	R40H3518	R404148
C6D042, C6D064 Steel Conventional F050, F055	Fa	GM	14 " x 2-1/2 "	2039 - 299	N/A	R40H599	R40H9206	R40H3500	R40H3501
C6D042, C6D064 Steel Conventional F070	Fa	WG	15 " x 3 "	1245C - 321	R700321	R40H521	R40H9237	R40H3502	R40H3503
C6D042, C6D064 Steel Conventional F090	Fa	WG	15 " x 3-1/2 "	1280B - 322	R464004	R40H521	R40H9237	R40H3502	R40H3503
F070	Fm	WG	15 " x 3 "	1245A - 235	R700235	R40H521	R40H9201	R404132	R404132[279]
H110, 135, 150	Ra	GM	15 " x 4 "	4640 - 427	R700427	R40H550	R404121	R40H3510	R40H3511
H150, T150, F106	Ra	GM	15 " x 5 "	4639 - 442	R700442	R40H550	R404121	R40H3510	R40H3511
H170, 175, T150, 175	Ra	WG	15 " x 6 "	4596 - 380	R700381	R40H597	R40H9200	R40H3540	R40H3541
	Rm	WG	15 " x 6 "	4596 - 381	R700381	R40H597	R40H9200	R40H3518	R404148
H172, 16244	Ra	WG	15 " x 6 "	4596 - 381	R700381	R40H597	R40H9200	R40H3540	R40H3541
T170, 185, 17100, 17200, 17121, 17221	Rm	WG	15 " x 7 "	4597 - 382	R700383	R40H597	R40H9200	R40H3518	R404148
T185, 17100, 17200	Ra	WG	15 " x 7 "	4597 - 383	R700383	R40H597	R40H9200	R40H3540	R40H3541
1979									
F090	Fm	WG	15 " x 3-1/2 "	1280 - 463	R700463	R40H521	R40H9201	R404132	R404132[279]
18121, 18221	Rm	WG	16 " x 6 "	1255 - 386	N/A	R40H597	R40H9200	R404149	R404150
22121, 22221	Ra	WG	16 " x 6 "	1255 - 386	N/A	R40H597	R40H9200	-	-
B6P042 School Bus 18121, 18221	Rm	WG	16 " x 6 "	1255 - 386	N/A	R40H597	R40H9200	R404149	R404150
B6P042 School Bus 22121, 22221	Ra	WG	16 " x 6 "	1255 - 386	N/A	R40H597	R40H9200	-	-
	Ra	WG	16 " x 6 "	1255 - 386	N/A	R40H597	R40H9200	-	-
B6P042 School Bus 34DS, 34DT	TRm	WG	15 " x 6 "	4596 - 381	R700381	R40H597	R40H9200	R40H3518	R404148

279 - Has 2.29" Adjuster Studs, For 2.60" Studs Use E-4133 306 - Power Brakes, Single System

MERITOR DRUM OR ROTOR NO.	CALIPER OR CYLINDER BORE SIZE	MERITOR CALIPER OR WHEEL CYLINDER (LEFT)	MERITOR CALIPER OR WHEEL CYLINDER (RIGHT)	MERITOR CALIPER OR WHEEL CYLINDER REPAIR KIT	MERITOR CALIPER PISTON	MERITOR MASTER CYLINDER	MERITOR MASTER CYLINDER KIT	MERITOR BRAKE HOSE (LEFT)	MERITOR BRAKE HOSE (RIGHT)
GMC / CHEV(Cont.)									
60, 6000 SERIES-20,000-27,500 lb. GVW									
N/A	1-1/4 "	R4133376	R4133377	R4166923	NR	R4112066[306]	R4110406	N/A	N/A
N/A	1-7/8 "	R4133420	R4133420	R4166897	NR	-	-	R4577252	R4577252
N/A	1-7/8 "	R4133420	R4133420	R4166897	NR	-	-	R4577252	R4577252
N/A	1-7/8 "	R4133420	R4133420	R4166897	NR	-	-	R4577252	R4577252
N/A	1-7/8 "	R4133420	R4133420	R4166897	NR	-	-	R4577252	R4577252
N/A	1-7/8 "	R4133420	R4133420	R4166897	NR	-	-	R4577252	R4577252
N/A	1-5/8 "	R4133338	R4133338	R4166689	NR	-	-	R4577252	R4577252
N/A	7/8 "	R4133406	R4133407	R4166820	NR	-	-	N/A	N/A
N/A	1-1/8 "	R4133320	R4133321	R4166926	NR	-	-	N/A	N/A
N/A	1-1/4 "	R4133315	R4133316	R4166923	NR	-	-	N/A	N/A
N/A	1-1/4 "	R4133315	R4133316	R4166923	NR	R4111993[306]	R4122386	N/A	N/A
N/A	1-1/8 "	R4133320	R4133321	R4166926	NR	R4111993[306]	R4122386	N/A	N/A
N/A	1-1/4 "	R4133376	R4133377	R4166923	NR	-	-	N/A	N/A
N/A	1-1/4 "	R4133376	R4133377	R4166923	NR	R4111993[306]	R4122386	N/A	N/A
N/A	1-1/2 "	R4133655	R4133656	R415194	NR	-	-	R4577252	R4577252
N/A	1-1/2 "	R4133655	R4133656	R415194	NR	-	-	R4577252	R4577252
N/A	1-5/8 "	R4133338	R4133338	R4166689	NR	-	-	R4577252	R4577252
N/A	1-5/8 "	R4133338	R4133338	R4166689	NR	-	-	R4577252	R4577252
N/A	1-5/8 "	R4133338	R4133338	R4166689	NR	-	-	R4577252	R4577252
N/A	1-3/4 "	R4133400	R4133400	R4166917	NR	-	-	R4577252	R4577252
N/A	1-3/4 "	R4133400	R4133400	R4166917	NR	-	-	R4577252	R4577252
N/A	7/8 "	R4133406	R4133407	R4166820	NR	R4112066[306]	R4110406	N/A	N/A
N/A	1-1/8 "	R4133320	R4133321	R4166926	NR	R4112066[306]	R4110406	N/A	N/A
N/A	1-1/4 "	R4133376	R4133377	R4166923	NR	R4112066[306]	R4110406	N/A	N/A
N/A	1-1/8 "	R4133320	R4133321	R4166926	NR	R4112066[306]	R4110406	N/A	N/A
N/A	1-1/2 "	R4133655	R4133656	R415194	NR	-	-	R4577252	R4577252
N/A	1-1/2 "	R4133655	R4133656	R415194	NR	-	-	R4577252	R4577252
N/A	1-5/8 "	R4133338	R4133338	R4166689	NR	-	-	R4577252	R4577252
N/A	1-5/8 "	R4133338	R4133338	R4166689	NR	-	-	R4577252	R4577252
N/A	1-5/8 "	R4133338	R4133338	R4166689	NR	-	-	R4577252	R4577252
N/A	1-3/4 "	R4133400	R4133400	R4166917	NR	-	-	R4577252	R4577252
N/A	1-3/4 "	R4133400	R4133400	R4166917	NR	-	-	R4577252	R4577252
N/A	1-1/4 "	R4133376	R4133377	R4166923	NR	-	-	-	-
N/A	1-7/8 "	R4133420	R4133420	R4166897	NR	-	-	-	-
N/A	1-7/8 "	R4133420	R4133420	R4166897	NR	-	-	-	-
N/A	1-7/8 "	R4133420	R4133420	R4166897	NR	-	-	-	-
N/A	1-7/8 "	R4133420	R4133420	R4166897	NR	-	-	-	-
N/A	1-7/8 "	R4133420	R4133420	R4166897	NR	-	-	-	-
N/A	1-5/8 "	R4133338	R4133338	R4166689	NR	-	-	-	-

MAKE MODEL YEAR AXLE CODE AXLE WEIGHT	AXLE & BRK. TYPE	BRK. MFG.	BRAKE SIZE	FMSI	MERITOR DISC PAD OR BRAKE SHOE	MERITOR GUIDE PIN OR RETURN SPRING KIT	MERITOR CALIPER HWD. KIT OR RETURN SPRING KIT	MERITOR ADJUSTER KIT (LEFT WHEEL)	MERITOR ADJUSTER KIT (RIGHT WHEEL)
GMC / CHEV(Cont.)									
60, 6000 SERIES-20,000-27,500 lb. GVW (Cont.)									
1979 B6P042 School Bus F050, F055	Fa	GM	14 " x 2-1/2 "	2039 - 299	N/A	R40H599	R40H9206	R40H3500	R40H3501
B6P042 School Bus F070	Fa	WG	15 " x 3 "	1245C - 321	R700321	R40H521	R40H9237	R40H3502	R40H3503
	Fa	WG	15 " x 3 "	1245C - 321	R700321	R40H521	R40H9237	R40H3502	R40H3503
	Fm	WG	15 " x 3 "	1245A - 235	R700235	R40H521	R40H9201	R404132	R404132[279]
	Fm	WG	15 " x 3 "	1245A - 235	R700235	R40H521	R40H9201	R404132	R404132[279]
B6P042 School Bus F090	Fa	WG	15 " x 3-1/2 "	1280B - 322	R464004	R40H521	R40H9237	R40H3502	R40H3503
	Fm	WG	15 " x 3-1/2 "	1280 - 463	R700463	R40H521	R40H9201	R404132	R404132[279]
B6P042 School Bus H110, 135, 150	Ra	GM	15 " x 4 "	4640 - 427	R700427	R40H550	R404121	R40H3510	R40H3511
B6P042 School Bus H150, T150, F106	Ra	GM	15 " x 5 "	4639 - 442	R700442	R40H550	R404121	R40H3510	R40H3511
B6P042 School Bus H170, 175, T150, 175	Ra	WG	15 " x 6 "	4596 - 380	R700381	R40H597	R40H9200	R40H3540	R40H3541
	Rm	WG	15 " x 6 "	4596 - 381	R700381	R40H597	R40H9200	R40H3518	R404148
B6P042 School Bus H172, 16244	Ra	WG	15 " x 6 "	4596 - 381	R700381	R40H597	R40H9200	R40H3540	R40H3541
B6P042 School Bus T170, 185, 17100, 17200, 17121, 17221	Ra	WG	15 " x 7 "	4597 - 383	R700383	R40H597	R40H9200	R40H3540	R40H3541
	Rm	WG	15 " x 7 "	4597 - 382	R700383	R40H597	R40H9200	R40H3518	R404148
F050, F055	Fa	GM	14 " x 2-1/2 "	2039 - 299	N/A	R40H599	R40H9206	R40H3500	R40H3501
F070	Fa	WG	15 " x 3 "	1245C - 321	R700321	R40H521	R40H9237	R40H3502	R40H3503
	Fm	WG	15 " x 3 "	1245A - 235	R700235	R40H521	R40H9201	R404132	R404132[279]
F090	Fa	WG	15 " x 3-1/2 "	1280B - 322	R464004	R40H521	R40H9237	R40H3502	R40H3503
H110, 135, 150	Ra	GM	15 " x 4 "	4640 - 427	R700427	R40H550	R404121	R40H3510	R40H3511
H150, T150, F106	Ra	GM	15 " x 5 "	4639 - 442	R700442	R40H550	R404121	R40H3510	R40H3511
H170, 175, T150, 175	Ra	WG	15 " x 6 "	4596 - 380	R700381	R40H597	R40H9200	R40H3540	R40H3541
	Rm	WG	15 " x 6 "	4596 - 381	R700381	R40H597	R40H9200	R40H3518	R404148
H172, 16244	Ra	WG	15 " x 6 "	4596 - 381	R700381	R40H597	R40H9200	R40H3540	R40H3541
T170, 185, 17100, 17200, 17121, 17221	Rm	WG	15 " x 7 "	4597 - 382	R700383	R40H597	R40H9200	R40H3518	R404148
T185, 17100, 17200	Ra	WG	15 " x 7 "	4597 - 383	R700383	R40H597	R40H9200	R40H3540	R40H3541
1978 F090	Fm	WG	15 " x 3-1/2 "	1280 - 463	R700463	R40H521	R40H9201	R404132	R404132[279]
17121, 17221	Ra	WG	15 " x 7 "	4597 - 383	R700383	R40H597	R40H9200	R40H3540	R40H3541
	Ra	WG	15 " x 7 "	4597 - 383	R700383	R40H597	R40H9200	R40H3540	R40H3541
	Ra	WG	16 " x 6 "	1255 - 386	N/A	R40H597	R40H9200	-	-
	Rm	WG	15 " x 7 "	4597 - 382	R700383	R40H597	R40H9200	R40H3518	R404148
	Rm	WG	15 " x 7 "	4597 - 382	R700383	R40H597	R40H9200	R40H3518	R404148
	Rm	WG	16 " x 6 "	1255 - 386	N/A	R40H597	R40H9200	R404149	R404150
17121, 17221, 18221	Ra	WG	16 " x 6 "	1255 - 386	N/A	R40H597	R40H9200	-	-
	Rm	WG	16 " x 6 "	1255 - 386	N/A	R40H597	R40H9200	R404149	R404150
18121, 18221	Rm	WG	16 " x 6 "	1255 - 386	N/A	R40H597	R40H9200	R404149	R404150
22121, 22221	Ra	WG	16 " x 6 "	1255 - 386	N/A	R40H597	R40H9200	-	-
B6P042 School Bus 18121, 18221	Rm	WG	16 " x 6 "	1255 - 386	N/A	R40H597	R40H9200	R404149	R404150
B6P042 School Bus 22121, 22221	Ra	WG	16 " x 6 "	1255 - 386	N/A	R40H597	R40H9200	-	-
	Ra	WG	16 " x 6 "	1255 - 386	N/A	R40H597	R40H9200	-	-
B6P042 School Bus 34DS, 34DT	TRm	WG	15 " x 6 "	4596 - 381	R700381	R40H597	R40H9200	R40H3518	R404148
B6P042 School Bus F050, F055	Fa	GM	14 " x 2-1/2 "	2039 - 299	N/A	R40H599	R40H9206	R40H3500	R40H3501
B6P042 School Bus F070	Fa	WG	15 " x 3 "	1245C - 321	R700321	R40H521	R40H9237	R40H3502	R40H3503
	Fm	WG	15 " x 3 "	1245A - 235	R700235	R40H521	R40H9201	R404132	R404132[279]
B6P042 School Bus F090	Fa	WG	15 " x 3-1/2 "	1280B - 322	R464004	R40H521	R40H9237	R40H3502	R40H3503
	Fm	WG	15 " x 3-1/2 "	1280 - 463	R700463	R40H521	R40H9201	R404132	R404132[279]

279 - Has 2.29" Adjuster Studs, For 2.60" Studs Use E-4133

MERITOR DRUM OR ROTOR NO.	CALIPER OR CYLINDER BORE SIZE	MERITOR CALIPER OR WHEEL CYLINDER (LEFT)	MERITOR CALIPER OR WHEEL CYLINDER (RIGHT)	MERITOR CALIPER OR WHEEL CYLINDER REPAIR KIT	MERITOR CALIPER PISTON	MERITOR MASTER CYLINDER	MERITOR MASTER CYLINDER KIT	MERITOR BRAKE HOSE (LEFT)	MERITOR BRAKE HOSE (RIGHT)
GMC / CHEV(Cont.)									
60, 6000 SERIES-20,000-27,500 lb. GVW (Cont.)									
N/A	7/8 "	R4133406	R4133407	R4166820	NR	-	-	-	-
N/A	1-1/4 "	R4133315	R4133316	R4166923	NR	-	-	-	-
N/A	1-1/8 "	R4133320	R4133321	R4166926	NR	-	-	-	-
N/A	1-1/4 "	R4133315	R4133316	R4166923	NR	-	-	-	-
N/A	1-1/8 "	R4133320	R4133321	R4166926	NR	-	-	-	-
N/A	1-1/4 "	R4133376	R4133377	R4166923	NR	-	-	-	-
N/A	1-1/4 "	R4133376	R4133377	R4166923	NR	-	-	-	-
N/A	1-1/2 "	R4133655	R4133656	R415194	NR	-	-	-	-
N/A	1-1/2 "	R4133655	R4133656	R415194	NR	-	-	-	-
N/A	1-5/8 "	R4133338	R4133338	R4166689	NR	-	-	-	-
N/A	1-5/8 "	R4133338	R4133338	R4166689	NR	-	-	-	-
N/A	1-5/8 "	R4133338	R4133338	R4166689	NR	-	-	-	-
N/A	1-3/4 "	R4133400	R4133400	R4166917	NR	-	-	-	-
N/A	1-3/4 "	R4133400	R4133400	R4166917	NR	-	-	-	-
N/A	7/8 "	R4133406	R4133407	R4166820	NR	-	-	-	-
N/A	1-1/8 "	R4133320	R4133321	R4166926	NR	-	-	-	-
N/A	1-1/8 "	R4133320	R4133321	R4166926	NR	-	-	-	-
N/A	1-1/4 "	R4133376	R4133377	R4166923	NR	-	-	-	-
N/A	1-1/2 "	R4133655	R4133656	R415194	NR	-	-	-	-
N/A	1-1/2 "	R4133655	R4133656	R415194	NR	-	-	-	-
N/A	1-5/8 "	R4133338	R4133338	R4166689	NR	-	-	-	-
N/A	1-5/8 "	R4133338	R4133338	R4166689	NR	-	-	-	-
N/A	1-5/8 "	R4133338	R4133338	R4166689	NR	-	-	-	-
N/A	1-3/4 "	R4133400	R4133400	R4166917	NR	-	-	-	-
N/A	1-3/4 "	R4133400	R4133400	R4166917	NR	-	-	-	-
N/A	1-1/4 "	R4133376	R4133377	R4166923	NR	-	-	-	-
N/A	1-3/4 "	R4133400	R4133400	R4166917	NR	-	-	-	-
N/A	1-3/4 "	R4133400	R4133400	R4166917	NR	-	-	-	-
N/A	1-7/8 "	R4133420	R4133420	R4166897	NR	-	-	-	-
N/A	1-3/4 "	R4133400	R4133400	R4166917	NR	-	-	-	-
N/A	1-3/4 "	R4133400	R4133400	R4166917	NR	-	-	-	-
N/A	1-7/8 "	R4133420	R4133420	R4166897	NR	-	-	-	-
N/A	1-7/8 "	R4133420	R4133420	R4166897	NR	-	-	-	-
N/A	1-7/8 "	R4133420	R4133420	R4166897	NR	-	-	-	-
N/A	1-7/8 "	R4133420	R4133420	R4166897	NR	-	-	-	-
N/A	1-7/8 "	R4133420	R4133420	R4166897	NR	-	-	-	-
N/A	1-7/8 "	R4133420	R4133420	R4166897	NR	-	-	-	-
N/A	1-5/8 "	R4133338	R4133338	R4166689	NR	-	-	-	-
N/A	7/8 "	R4133406	R4133407	R4166820	NR	-	-	-	-
N/A	1-1/8 "	R4133320	R4133321	R4166926	NR	-	-	-	-
N/A	1-1/8 "	R4133320	R4133321	R4166926	NR	-	-	-	-
N/A	1-1/4 "	R4133376	R4133377	R4166923	NR	-	-	-	-
N/A	1-1/4 "	R4133376	R4133377	R4166923	NR	-	-	-	-

MAKE MODEL YEAR AXLE CODE AXLE WEIGHT	AXLE & BRK. TYPE	BRK. MFG.	BRAKE SIZE	FMSI	MERITOR DISC PAD OR BRAKE SHOE	MERITOR GUIDE PIN OR RETURN SPRING KIT	MERITOR CALIPER HWD. KIT OR RETURN SPRING KIT	MERITOR ADJUSTER KIT (LEFT WHEEL)	MERITOR ADJUSTER KIT (RIGHT WHEEL)
GMC / CHEV(Cont.)									
60, 6000 SERIES-20,000-27,500 lb. GVW (Cont.)									
1978									
B6P042 School Bus									
H110, 135, 150	Ra	GM	15 " x 4 "	4640 - 427	R700427	R40H550	R404121	R40H3510	R40H3511
B6P042 School Bus									
H150, T150, F106	Ra	GM	15 " x 5 "	4639 - 442	R700442	R40H550	R404121	R40H3510	R40H3511
B6P042 School Bus									
H170, 175, T150, 175	Ra	WG	15 " x 6 "	4596 - 380	R700381	R40H597	R40H9200	R40H3540	R40H3541
	Rm	WG	15 " x 6 "	4596 - 381	R700381	R40H597	R40H9200	R40H3518	R404148
B6P042 School Bus									
H172, 16244	Ra	WG	15 " x 6 "	4596 - 381	R700381	R40H597	R40H9200	R40H3540	R40H3541
B6P042 School Bus									
T170, 185, 17100, 17200,									
17121, 17221	Ra	WG	15 " x 7 "	4597 - 383	R700383	R40H597	R40H9200	R40H3540	R40H3541
	Rm	WG	15 " x 7 "	4597 - 382	R700383	R40H597	R40H9200	R40H3518	R404148
F050, F055	Fa	GM	14 " x 2-1/2 "	2039 - 299	N/A	R40H599	R40H9206	R40H3500	R40H3501
F070	Fa	WG	15 " x 3 "	1245C - 321	R700321	R40H521	R40H9237	R40H3502	R40H3503
	Fa	WG	15 " x 3 "	1245C - 321	R700321	R40H521	R40H9237	R40H3502	R40H3503
	Fa	WG	15 " x 3 "	1245C - 321	R700321	R40H521	R40H9237	R40H3502	R40H3503
	Fm	WG	15 " x 3 "	1245A - 235	R700235	R40H521	R40H9201	R404132	R404132[279]
	Fm	WG	15 " x 3 "	1245A - 235	R700235	R40H521	R40H9201	R404132	R404132[279]
	Fm	WG	15 " x 3 "	1245A - 235	R700235	R40H521	R40H9201	R404132	R404132[279]
F090	Fa	WG	15 " x 3-1/2 "	1280B - 322	R464004	R40H521	R40H9237	R40H3502	R40H3503
	Fa	WG	15 " x 3-1/2 "	1280B - 322	R464004	R40H521	R40H9237	R40H3502	R40H3503
F090, F120	Fa	WG	15 " x 3-1/2 "	1280B - 322	R464004	R40H521	R40H9237	R40H3502	R40H3503
	Fm	WG	15 " x 3-1/2 "	1280 - 463	R700463	R40H521	R40H9201	R404132	R404132[279]
F120	Fm	WG	15 " x 3-1/2 "	1280 - 463	R700463	R40H521	R40H9201	R404132	R404132[279]
H110, 135, 150	Ra	GM	15 " x 4 "	4640 - 427	R700427	R40H550	R404121	R40H3510	R40H3511
H150, T150, F106	Ra	GM	15 " x 5 "	4639 - 442	R700442	R40H550	R404121	R40H3510	R40H3511
H170, 175, T150, 175	Ra	WG	15 " x 6 "	4596 - 380	R700381	R40H597	R40H9200	R40H3540	R40H3541
	Rm	WG	15 " x 6 "	4596 - 381	R700381	R40H597	R40H9200	R40H3518	R404148
H170, T170	Ra	WG	15 " x 6 "	4596 - 381	R700381	R40H597	R40H9200	R40H3540	R40H3541
	Ra	WG	15 " x 6 "	4596 - 381	R700381	R40H597	R40H9200	R40H3540	R40H3541
	Rm	WG	15 " x 6 "	4596 - 380	R700381	R40H597	R40H9200	R40H3518	R404148
	Rm	WG	15 " x 6 "	4596 - 380	R700381	R40H597	R40H9200	R40H3518	R404148
H172, 16244	Ra	WG	15 " x 6 "	4596 - 381	R700381	R40H597	R40H9200	R40H3540	R40H3541
T170, 185, 17100, 17200,									
17121, 17221	Rm	WG	15 " x 7 "	4597 - 382	R700383	R40H597	R40H9200	R40H3518	R404148
T185, 17100, 17200	Ra	WG	15 " x 7 "	4597 - 383	R700383	R40H597	R40H9200	R40H3540	R40H3541
1977									
F090	Fm	WG	15 " x 3-1/2 "	1280 - 463	R700463	R40H521	R40H9201	R404132	R404132[279]
18121, 18221	Rm	WG	16 " x 6 "	1255 - 386	N/A	R40H597	R40H9200	R404149	R404150
22121, 22221	Ra	WG	16 " x 6 "	1255 - 386	N/A	R40H597	R40H9200	-	-
B6P042 School Bus									
18121, 18221	Rm	WG	16 " x 6 "	1255 - 386	N/A	R40H597	R40H9200	R404149	R404150
B6P042 School Bus									
22121, 22221	Ra	WG	16 " x 6 "	1255 - 386	N/A	R40H597	R40H9200	-	-
	Ra	WG	16 " x 6 "	1255 - 386	N/A	R40H597	R40H9200	-	-
B6P042 School Bus									
34DS, 34DT	TRm	WG	15 " x 6 "	4596 - 381	R700381	R40H597	R40H9200	R40H3518	R404148
B6P042 School Bus									
F050, F055	Fa	GM	14 " x 2-1/2 "	2039 - 299	N/A	R40H599	R40H9206	R40H3500	R40H3501
B6P042 School Bus									
F070	Fa	WG	15 " x 3 "	1245C - 321	R700321	R40H521	R40H9237	R40H3502	R40H3503
	Fm	WG	15 " x 3 "	1245A - 235	R700235	R40H521	R40H9201	R404132	R404132[279]
B6P042 School Bus									
F090	Fa	WG	15 " x 3-1/2 "	1280B - 322	R464004	R40H521	R40H9237	R40H3502	R40H3503
	Fm	WG	15 " x 3-1/2 "	1280 - 463	R700463	R40H521	R40H9201	R404132	R404132[279]
B6P042 School Bus									
H110, 135, 150	Ra	GM	15 " x 4 "	4640 - 427	R700427	R40H550	R404121	R40H3510	R40H3511
B6P042 School Bus									
H150, T150, F106	Ra	GM	15 " x 5 "	4639 - 442	R700442	R40H550	R404121	R40H3510	R40H3511
B6P042 School Bus									
H170, 175, T150, 175	Ra	WG	15 " x 6 "	4596 - 380	R700381	R40H597	R40H9200	R40H3540	R40H3541

279 - Has 2.29" Adjuster Studs, For 2.60" Studs Use E-4133

MERITOR DRUM OR ROTOR NO.	CALIPER OR CYLINDER BORE SIZE	MERITOR CALIPER OR WHEEL CYLINDER (LEFT)	MERITOR CALIPER OR WHEEL CYLINDER (RIGHT)	MERITOR CALIPER OR WHEEL CYLINDER REPAIR KIT	MERITOR CALIPER PISTON	MERITOR MASTER CYLINDER	MERITOR MASTER CYLINDER KIT	MERITOR BRAKE HOSE (LEFT)	MERITOR BRAKE HOSE (RIGHT)
GMC / CHEV(Cont.)									
60, 6000 SERIES-20,000-27,500 lb. GVW (Cont.)									
N/A	1-1/2 "	R4133655	R4133656	R415194	NR	-	-	-	-
N/A	1-1/2 "	R4133655	R4133656	R415194	NR	-	-	-	-
N/A	1-5/8 "	R4133338	R4133338	R4166689	NR	-	-	-	-
N/A	1-5/8 "	R4133338	R4133338	R4166689	NR	-	-	-	-
N/A	1-5/8 "	R4133338	R4133338	R4166689	NR	-	-	-	-
N/A	1-3/4 "	R4133400	R4133400	R4166917	NR	-	-	-	-
N/A	1-3/4 "	R4133400	R4133400	R4166917	NR	-	-	-	-
N/A	7/8 "	R4133406	R4133407	R4166820	NR	-	-	-	-
N/A	1-1/8 "	R4133320	R4133321	R4166926	NR	-	-	-	-
N/A	1-1/8 "	R4133320	R4133321	R4166926	NR	-	-	-	-
N/A	1-1/8 "	R4133320	R4133321	R4166926	NR	-	-	-	-
N/A	1-1/8 "	R4133320	R4133321	R4166926	NR	-	-	-	-
N/A	1-1/8 "	R4133320	R4133321	R4166926	NR	-	-	-	-
N/A	1-1/8 "	R4133320	R4133321	R4166926	NR	-	-	-	-
N/A	1-1/4 "	R4133376	R4133377	R4166923	NR	-	-	-	-
N/A	1-1/4 "	R4133376	R4133377	R4166923	NR	-	-	-	-
N/A	1-1/4 "	R4133376	R4133377	R4166923	NR	-	-	-	-
N/A	1-1/4 "	R4133376	R4133377	R4166923	NR	-	-	-	-
N/A	1-1/4 "	R4133376	R4133377	R4166923	NR	-	-	-	-
N/A	1-1/2 "	R4133655	R4133656	R415194	NR	-	-	-	-
N/A	1-1/2 "	R4133655	R4133656	R415194	NR	-	-	-	-
N/A	1-5/8 "	R4133338	R4133338	R4166689	NR	-	-	-	-
N/A	1-5/8 "	R4133338	R4133338	R4166689	NR	-	-	-	-
N/A	1-5/8 "	R4133338	R4133338	R4166689	NR	-	-	-	-
N/A	1-5/8 "	R4133338	R4133338	R4166689	NR	-	-	-	-
N/A	1-5/8 "	R4133338	R4133338	R4166689	NR	-	-	-	-
N/A	1-5/8 "	R4133338	R4133338	R4166689	NR	-	-	-	-
N/A	1-5/8 "	R4133338	R4133338	R4166689	NR	-	-	-	-
N/A	1-3/4 "	R4133400	R4133400	R4166917	NR	-	-	-	-
N/A	1-3/4 "	R4133400	R4133400	R4166917	NR	-	-	-	-
N/A	1-1/4 "	R4133376	R4133377	R4166923	NR	-	-	-	-
N/A	1-7/8 "	R4133420	R4133420	R4166897	NR	-	-	-	-
N/A	1-7/8 "	R4133420	R4133420	R4166897	NR	-	-	-	-
N/A	1-7/8 "	R4133420	R4133420	R4166897	NR	-	-	-	-
N/A	1-7/8 "	R4133420	R4133420	R4166897	NR	-	-	-	-
N/A	1-7/8 "	R4133420	R4133420	R4166897	NR	-	-	-	-
N/A	1-5/8 "	R4133338	R4133338	R4166689	NR	-	-	-	-
N/A	7/8 "	R4133406	R4133407	R4166820	NR	-	-	-	-
N/A	1-1/8 "	R4133320	R4133321	R4166926	NR	-	-	-	-
N/A	1-1/8 "	R4133320	R4133321	R4166926	NR	-	-	-	-
N/A	1-1/4 "	R4133376	R4133377	R4166923	NR	-	-	-	-
N/A	1-1/4 "	R4133376	R4133377	R4166923	NR	-	-	-	-
N/A	1-1/2 "	R4133655	R4133656	R415194	NR	-	-	-	-
N/A	1-1/2 "	R4133655	R4133656	R415194	NR	-	-	-	-
N/A	1-5/8 "	R4133338	R4133338	R4166689	NR	-	-	-	-

MAKE MODEL YEAR AXLE CODE AXLE WEIGHT	AXLE & BRK. TYPE	BRK. MFG.	BRAKE SIZE	FMSI	MERITOR DISC PAD OR BRAKE SHOE	MERITOR GUIDE PIN OR RETURN SPRING KIT	MERITOR CALIPER HWD. KIT OR RETURN SPRING KIT	MERITOR ADJUSTER KIT (LEFT WHEEL)	MERITOR ADJUSTER KIT (RIGHT WHEEL)
GMC / CHEV(Cont.)									
60, 6000 SERIES-20,000-27,500 lb. GVW (Cont.)									
1977	Rm	WG	15 " x 6 "	4596 - 381	R700381	R40H597	R40H9200	R40H3518	R404148
B6P042 School Bus H172, 16244	Ra	WG	15 " x 6 "	4596 - 381	R700381	R40H597	R40H9200	R40H3540	R40H3541
B6P042 School Bus T170, 185, 17100, 17200, 17121, 17221	Ra	WG	15 " x 7 "	4597 - 383	R700383	R40H597	R40H9200	R40H3540	R40H3541
	Rm	WG	15 " x 7 "	4597 - 382	R700383	R40H597	R40H9200	R40H3518	R404148
F050, F055	Fa	GM	14 " x 2-1/2 "	2039 - 299	N/A	R40H599	R40H9206	R40H3500	R40H3501
F070	Fa	WG	15 " x 3 "	1245C - 321	R700321	R40H521	R40H9237	R40H3502	R40H3503
	Fm	WG	15 " x 3 "	1245A - 235	R700235	R40H521	R40H9201	R404132	R404132[279]
F090	Fa	WG	15 " x 3-1/2 "	1280B - 322	R464004	R40H521	R40H9237	R40H3502	R40H3503
H110, 135, 150	Ra	GM	15 " x 4 "	4640 - 427	R700427	R40H550	R404121	R40H3510	R40H3511
H150, T150, F106	Ra	GM	15 " x 5 "	4639 - 442	R700442	R40H550	R404121	R40H3510	R40H3511
H170, 175, T150, 175	Ra	WG	15 " x 6 "	4596 - 380	R700381	R40H597	R40H9200	R40H3540	R40H3541
	Rm	WG	15 " x 6 "	4596 - 381	R700381	R40H597	R40H9200	R40H3518	R404148
H172, 16244	Ra	WG	15 " x 6 "	4596 - 381	R700381	R40H597	R40H9200	R40H3540	R40H3541
T170, 185, 17100, 17200, 17121, 17221	Rm	WG	15 " x 7 "	4597 - 382	R700383	R40H597	R40H9200	R40H3518	R404148
T185, 17100, 17200	Ra	WG	15 " x 7 "	4597 - 383	R700383	R40H597	R40H9200	R40H3540	R40H3541
1976									
F090	Fm	WG	15 " x 3-1/2 "	1280 - 463	R700463	R40H521	R40H9201	R404132	R404132[279]
18121, 18221	Rm	WG	16 " x 6 "	1255 - 386	N/A	R40H597	R40H9200	R404149	R404150
22121, 22221	Ra	WG	16 " x 6 "	1255 - 386	N/A	R40H597	R40H9200	-	-
B6P042 School Bus 18121, 18221	Rm	WG	16 " x 6 "	1255 - 386	N/A	R40H597	R40H9200	R404149	R404150
B6P042 School Bus 22121, 22221	Ra	WG	16 " x 6 "	1255 - 386	N/A	R40H597	R40H9200	-	-
	Ra	WG	16 " x 6 "	1255 - 386	N/A	R40H597	R40H9200	-	-
B6P042 School Bus 34DS, 34DT	TRm	WG	15 " x 6 "	4596 - 381	R700381	R40H597	R40H9200	R40H3518	R404148
B6P042 School Bus F050, F055	Fa	GM	14 " x 2-1/2 "	2039 - 299	N/A	R40H599	R40H9206	R40H3500	R40H3501
B6P042 School Bus F070	Fa	WG	15 " x 3 "	1245C - 321	R700321	R40H521	R40H9237	R40H3502	R40H3503
	Fm	WG	15 " x 3 "	1245A - 235	R700235	R40H521	R40H9201	R404132	R404132[279]
B6P042 School Bus F090	Fa	WG	15 " x 3-1/2 "	1280B - 322	R464004	R40H521	R40H9237	R40H3502	R40H3503
	Fm	WG	15 " x 3-1/2 "	1280 - 463	R700463	R40H521	R40H9201	R404132	R404132[279]
B6P042 School Bus H110, 135, 150	Ra	GM	15 " x 4 "	4640 - 427	R700427	R40H550	R404121	R40H3510	R40H3511
B6P042 School Bus H150, T150, F106	Ra	GM	15 " x 5 "	4639 - 442	R700442	R40H550	R404121	R40H3510	R40H3511
B6P042 School Bus H170, 175, T150, 175	Ra	WG	15 " x 6 "	4596 - 380	R700381	R40H597	R40H9200	R40H3540	R40H3541
	Rm	WG	15 " x 6 "	4596 - 381	R700381	R40H597	R40H9200	R40H3518	R404148
B6P042 School Bus H172, 16244	Ra	WG	15 " x 6 "	4596 - 381	R700381	R40H597	R40H9200	R40H3540	R40H3541
B6P042 School Bus T170, 185, 17100, 17200, 17121, 17221	Ra	WG	15 " x 7 "	4597 - 383	R700383	R40H597	R40H9200	R40H3540	R40H3541
	Rm	WG	15 " x 7 "	4597 - 382	R700383	R40H597	R40H9200	R40H3518	R404148
F050, F055	Fa	GM	14 " x 2-1/2 "	2039 - 299	N/A	R40H599	R40H9206	R40H3500	R40H3501
F070	Fa	WG	15 " x 3 "	1245C - 321	R700321	R40H521	R40H9237	R40H3502	R40H3503
	Fm	WG	15 " x 3 "	1245A - 235	R700235	R40H521	R40H9201	R404132	R404132[279]
F090	Fa	WG	15 " x 3-1/2 "	1280B - 322	R464004	R40H521	R40H9237	R40H3502	R40H3503
H110, 135, 150	Ra	GM	15 " x 4 "	4640 - 427	R700427	R40H550	R404121	R40H3510	R40H3511
H150, T150, F106	Ra	GM	15 " x 5 "	4639 - 442	R700442	R40H550	R404121	R40H3510	R40H3511
H170, 175, T150, 175	Ra	WG	15 " x 6 "	4596 - 380	R700381	R40H597	R40H9200	R40H3540	R40H3541
	Rm	WG	15 " x 6 "	4596 - 381	R700381	R40H597	R40H9200	R40H3518	R404148
H172, 16244	Ra	WG	15 " x 6 "	4596 - 381	R700381	R40H597	R40H9200	R40H3540	R40H3541
T170, 185, 17100, 17200, 17121, 17221	Rm	WG	15 " x 7 "	4597 - 382	R700383	R40H597	R40H9200	R40H3518	R404148

279 - Has 2.29" Adjuster Studs, For 2.60" Studs Use E-4133

MERITOR DRUM OR ROTOR NO.	CALIPER OR CYLINDER BORE SIZE	MERITOR CALIPER OR WHEEL CYLINDER (LEFT)	MERITOR CALIPER OR WHEEL CYLINDER (RIGHT)	MERITOR CALIPER OR WHEEL CYLINDER REPAIR KIT	MERITOR CALIPER PISTON	MERITOR MASTER CYLINDER	MERITOR MASTER CYLINDER KIT	MERITOR BRAKE HOSE (LEFT)	MERITOR BRAKE HOSE (RIGHT)
GMC / CHEV(Cont.)									
60, 6000 SERIES-20,000-27,500 lb. GVW (Cont.)									
N/A	1-5/8 "	R4133338	R4133338	R4166689	NR	-	-	-	-
N/A	1-5/8 "	R4133338	R4133338	R4166689	NR	-	-	-	-
N/A	1-3/4 "	R4133400	R4133400	R4166917	NR	-	-	-	-
N/A	1-3/4 "	R4133400	R4133400	R4166917	NR	-	-	-	-
N/A	7/8 "	R4133406	R4133407	R4166820	NR	-	-	-	-
N/A	1-1/8 "	R4133320	R4133321	R4166926	NR	-	-	-	-
N/A	1-1/8 "	R4133320	R4133321	R4166926	NR	-	-	-	-
N/A	1-1/4 "	R4133376	R4133377	R4166923	NR	-	-	-	-
N/A	1-1/2 "	R4133655	R4133656	R415194	NR	-	-	-	-
N/A	1-1/2 "	R4133655	R4133656	R415194	NR	-	-	-	-
N/A	1-5/8 "	R4133338	R4133338	R4166689	NR	-	-	-	-
N/A	1-5/8 "	R4133338	R4133338	R4166689	NR	-	-	-	-
N/A	1-5/8 "	R4133338	R4133338	R4166689	NR	-	-	-	-
N/A	1-3/4 "	R4133400	R4133400	R4166917	NR	-	-	-	-
N/A	1-3/4 "	R4133400	R4133400	R4166917	NR	-	-	-	-
N/A	1-1/4 "	R4133376	R4133377	R4166923	NR	-	-	-	-
N/A	1-7/8 "	R4133420	R4133420	R4166897	NR	-	-	-	-
N/A	1-7/8 "	R4133420	R4133420	R4166897	NR	-	-	-	-
N/A	1-7/8 "	R4133420	R4133420	R4166897	NR	-	-	-	-
N/A	1-7/8 "	R4133420	R4133420	R4166897	NR	-	-	-	-
N/A	1-7/8 "	R4133420	R4133420	R4166897	NR	-	-	-	-
N/A	1-5/8 "	R4133338	R4133338	R4166689	NR	-	-	-	-
N/A	7/8 "	R4133406	R4133407	R4166820	NR	-	-	-	-
N/A	1-1/8 "	R4133320	R4133321	R4166926	NR	-	-	-	-
N/A	1-1/8 "	R4133320	R4133321	R4166926	NR	-	-	-	-
N/A	1-1/4 "	R4133376	R4133377	R4166923	NR	-	-	-	-
N/A	1-1/4 "	R4133376	R4133377	R4166923	NR	-	-	-	-
N/A	1-1/2 "	R4133655	R4133656	R415194	NR	-	-	-	-
N/A	1-1/2 "	R4133655	R4133656	R415194	NR	-	-	-	-
N/A	1-5/8 "	R4133338	R4133338	R4166689	NR	-	-	-	-
N/A	1-5/8 "	R4133338	R4133338	R4166689	NR	-	-	-	-
N/A	1-5/8 "	R4133338	R4133338	R4166689	NR	-	-	-	-
N/A	1-3/4 "	R4133400	R4133400	R4166917	NR	-	-	-	-
N/A	1-3/4 "	R4133400	R4133400	R4166917	NR	-	-	-	-
N/A	7/8 "	R4133406	R4133407	R4166820	NR	-	-	-	-
N/A	1-1/8 "	R4133320	R4133321	R4166926	NR	-	-	-	-
N/A	1-1/8 "	R4133320	R4133321	R4166926	NR	-	-	-	-
N/A	1-1/4 "	R4133376	R4133377	R4166923	NR	-	-	-	-
N/A	1-1/2 "	R4133655	R4133656	R415194	NR	-	-	-	-
N/A	1-1/2 "	R4133655	R4133656	R415194	NR	-	-	-	-
N/A	1-5/8 "	R4133338	R4133338	R4166689	NR	-	-	-	-
N/A	1-5/8 "	R4133338	R4133338	R4166689	NR	-	-	-	-
N/A	1-5/8 "	R4133338	R4133338	R4166689	NR	-	-	-	-
N/A	1-3/4 "	R4133400	R4133400	R4166917	NR	-	-	-	-

MAKE MODEL YEAR AXLE CODE AXLE WEIGHT	AXLE & BRK. TYPE	BRK. MFG.	BRAKE SIZE	FMSI	MERITOR DISC PAD OR BRAKE SHOE	MERITOR GUIDE PIN OR RETURN SPRING KIT	MERITOR CALIPER HWD. KIT OR RETURN SPRING KIT	MERITOR ADJUSTER KIT (LEFT WHEEL)	MERITOR ADJUSTER KIT (RIGHT WHEEL)
GMC / CHEV(Cont.)									
60, 6000 SERIES-20,000-27,500 lb. GVW (Cont.)									
1976 T185, 17100, 17200	Ra	WG	15 " x 7 "	4597 - 383	R700383	R40H597	R40H9200	R40H3540	R40H3541
1975 F090	Fm	WG	15 " x 3-1/2 "	1280 - 463	R700463	R40H521	R40H9201	R404132	R404132[279]
18121, 18221	Rm	WG	16 " x 6 "	1255 - 386	N/A	R40H597	R40H9200	R404149	R404150
22121, 22221	Ra	WG	16 " x 6 "	1255 - 386	N/A	R40H597	R40H9200	-	-
B6P042 School Bus 18121, 18221	Rm	WG	16 " x 6 "	1255 - 386	N/A	R40H597	R40H9200	R404149	R404150
B6P042 School Bus 22121, 22221	Ra Ra	WG WG	16 " x 6 " 16 " x 6 "	1255 - 386 1255 - 386	N/A N/A	R40H597 R40H597	R40H9200 R40H9200	- -	- -
B6P042 School Bus 34DS, 34DT	TRm	WG	15 " x 6 "	4596 - 381	R700381	R40H597	R40H9200	R40H3518	R404148
B6P042 School Bus F050, F055	Fa	GM	14 " x 2-1/2 "	2039 - 299	N/A	R40H599	R40H9206	R40H3500	R40H3501
B6P042 School Bus F070	Fa	WG	15 " x 3 "	1245C - 321	R700321	R40H521	R40H9237	R40H3502	R40H3503
	Fm	WG	15 " x 3 "	1245A - 235	R700235	R40H521	R40H9201	R404132	R404132[279]
B6P042 School Bus F090	Fa	WG	15 " x 3-1/2 "	1280B - 322	R464004	R40H521	R40H9237	R40H3502	R40H3503
	Fm	WG	15 " x 3-1/2 "	1280 - 463	R700463	R40H521	R40H9201	R404132	R404132[279]
B6P042 School Bus H110, 135, 150	Ra	GM	15 " x 4 "	4640 - 427	R700427	R40H550	R404121	R40H3510	R40H3511
B6P042 School Bus H150, T150, F106	Ra	GM	15 " x 5 "	4639 - 442	R700442	R40H550	R404121	R40H3510	R40H3511
B6P042 School Bus H170, 175, T150, 175	Ra	WG	15 " x 6 "	4596 - 380	R700381	R40H597	R40H9200	R40H3540	R40H3541
	Rm	WG	15 " x 6 "	4596 - 381	R700381	R40H597	R40H9200	R40H3518	R404148
B6P042 School Bus H172, 16244	Ra	WG	15 " x 6 "	4596 - 381	R700381	R40H597	R40H9200	R40H3540	R40H3541
B6P042 School Bus T170, 185, 17100, 17200, 17121, 17221	Ra	WG	15 " x 7 "	4597 - 383	R700383	R40H597	R40H9200	R40H3540	R40H3541
	Rm	WG	15 " x 7 "	4597 - 382	R700383	R40H597	R40H9200	R40H3518	R404148
F050, F055	Fa	GM	14 " x 2-1/2 "	2039 - 299	N/A	R40H599	R40H9206	R40H3500	R40H3501
F070	Fa	WG	15 " x 3 "	1245C - 321	R700321	R40H521	R40H9237	R40H3502	R40H3503
	Fm	WG	15 " x 3 "	1245A - 235	R700235	R40H521	R40H9201	R404132	R404132[279]
F090	Fa	WG	15 " x 3-1/2 "	1280B - 322	R464004	R40H521	R40H9237	R40H3502	R40H3503
H110, 135, 150	Ra	GM	15 " x 4 "	4640 - 427	R700427	R40H550	R404121	R40H3510	R40H3511
H150, T150, F106	Ra	GM	15 " x 5 "	4639 - 442	R700442	R40H550	R404121	R40H3510	R40H3511
H170, 175, T150, 175	Ra	WG	15 " x 6 "	4596 - 380	R700381	R40H597	R40H9200	R40H3540	R40H3541
	Rm	WG	15 " x 6 "	4596 - 381	R700381	R40H597	R40H9200	R40H3518	R404148
H172, 16244	Ra	WG	15 " x 6 "	4596 - 381	R700381	R40H597	R40H9200	R40H3540	R40H3541
T170, 185, 17100, 17200, 17121, 17221	Rm	WG	15 " x 7 "	4597 - 382	R700383	R40H597	R40H9200	R40H3518	R404148
T185, 17100, 17200	Ra	WG	15 " x 7 "	4597 - 383	R700383	R40H597	R40H9200	R40H3540	R40H3541
1974 F090	Fm	WG	15 " x 3-1/2 "	1280 - 463	R700463	R40H521	R40H9201	R404132	R404132[279]
18121, 18221	Rm	WG	16 " x 6 "	1255 - 386	N/A	R40H597	R40H9200	R404149	R404150
22121, 22221	Ra	WG	16 " x 6 "	1255 - 386	N/A	R40H597	R40H9200	-	-
B6P042 School Bus 18121, 18221	Rm	WG	16 " x 6 "	1255 - 386	N/A	R40H597	R40H9200	R404149	R404150
B6P042 School Bus 22121, 22221	Ra Ra	WG WG	16 " x 6 " 16 " x 6 "	1255 - 386 1255 - 386	N/A N/A	R40H597 R40H597	R40H9200 R40H9200	- -	- -
B6P042 School Bus 34DS, 34DT	TRm	WG	15 " x 6 "	4596 - 381	R700381	R40H597	R40H9200	R40H3518	R404148
B6P042 School Bus F050, F055	Fa	GM	14 " x 2-1/2 "	2039 - 299	N/A	R40H599	R40H9206	R40H3500	R40H3501
B6P042 School Bus F070	Fa	WG	15 " x 3 "	1245C - 321	R700321	R40H521	R40H9237	R40H3502	R40H3503
	Fm	WG	15 " x 3 "	1245A - 235	R700235	R40H521	R40H9201	R404132	R404132[279]

279 - Has 2.29" Adjuster Studs, For 2.60" Studs Use E-4133

MERITOR DRUM OR ROTOR NO.	CALIPER OR CYLINDER BORE SIZE	MERITOR CALIPER OR WHEEL CYLINDER (LEFT)	MERITOR CALIPER OR WHEEL CYLINDER (RIGHT)	MERITOR CALIPER OR WHEEL CYLINDER REPAIR KIT	MERITOR CALIPER PISTON	MERITOR MASTER CYLINDER	MERITOR MASTER CYLINDER KIT	MERITOR BRAKE HOSE (LEFT)	MERITOR BRAKE HOSE (RIGHT)
GMC / CHEV(Cont.)									
60, 6000 SERIES-20,000-27,500 lb. GVW (Cont.)									
N/A	1-3/4 "	R4133400	R4133400	R4166917	NR	-	-	-	-
N/A	1-1/4 "	R4133376	R4133377	R4166923	NR	-	-	-	-
N/A	1-7/8 "	R4133420	R4133420	R4166897	NR	-	-	-	-
N/A	1-7/8 "	R4133420	R4133420	R4166897	NR	-	-	-	-
N/A	1-7/8 "	R4133420	R4133420	R4166897	NR	-	-	-	-
N/A	1-7/8 "	R4133420	R4133420	R4166897	NR	-	-	-	-
N/A	1-7/8 "	R4133420	R4133420	R4166897	NR	-	-	-	-
N/A	1-5/8 "	R4133338	R4133338	R4166689	NR	-	-	-	-
N/A	7/8 "	R4133406	R4133407	R4166820	NR	-	-	-	-
N/A	1-1/8 "	R4133320	R4133321	R4166926	NR	-	-	-	-
N/A	1-1/8 "	R4133320	R4133321	R4166926	NR	-	-	-	-
N/A	1-1/4 "	R4133376	R4133377	R4166923	NR	-	-	-	-
N/A	1-1/4 "	R4133376	R4133377	R4166923	NR	-	-	-	-
N/A	1-1/2 "	R4133655	R4133656	R415194	NR	-	-	-	-
N/A	1-1/2 "	R4133655	R4133656	R415194	NR	-	-	-	-
N/A	1-5/8 "	R4133338	R4133338	R4166689	NR	-	-	-	-
N/A	1-5/8 "	R4133338	R4133338	R4166689	NR	-	-	-	-
N/A	1-5/8 "	R4133338	R4133338	R4166689	NR	-	-	-	-
N/A	1-3/4 "	R4133400	R4133400	R4166917	NR	-	-	-	-
N/A	1-3/4 "	R4133400	R4133400	R4166917	NR	-	-	-	-
N/A	7/8 "	R4133406	R4133407	R4166820	NR	-	-	-	-
N/A	1-1/8 "	R4133320	R4133321	R4166926	NR	-	-	-	-
N/A	1-1/8 "	R4133320	R4133321	R4166926	NR	-	-	-	-
N/A	1-1/4 "	R4133376	R4133377	R4166923	NR	-	-	-	-
N/A	1-1/2 "	R4133655	R4133656	R415194	NR	-	-	-	-
N/A	1-1/2 "	R4133655	R4133656	R415194	NR	-	-	-	-
N/A	1-5/8 "	R4133338	R4133338	R4166689	NR	-	-	-	-
N/A	1-5/8 "	R4133338	R4133338	R4166689	NR	-	-	-	-
N/A	1-5/8 "	R4133338	R4133338	R4166689	NR	-	-	-	-
N/A	1-3/4 "	R4133400	R4133400	R4166917	NR	-	-	-	-
N/A	1-3/4 "	R4133400	R4133400	R4166917	NR	-	-	-	-
N/A	1-1/4 "	R4133376	R4133377	R4166923	NR	-	-	-	-
N/A	1-7/8 "	R4133420	R4133420	R4166897	NR	-	-	-	-
N/A	1-7/8 "	R4133420	R4133420	R4166897	NR	-	-	-	-
N/A	1-7/8 "	R4133420	R4133420	R4166897	NR	-	-	-	-
N/A	1-7/8 "	R4133420	R4133420	R4166897	NR	-	-	-	-
N/A	1-7/8 "	R4133420	R4133420	R4166897	NR	-	-	-	-
N/A	1-5/8 "	R4133338	R4133338	R4166689	NR	-	-	-	-
N/A	7/8 "	R4133406	R4133407	R4166820	NR	-	-	-	-
N/A	1-1/8 "	R4133320	R4133321	R4166926	NR	-	-	-	-
N/A	1-1/8 "	R4133320	R4133321	R4166926	NR	-	-	-	-

MAKE MODEL YEAR AXLE CODE AXLE WEIGHT	AXLE & BRK. TYPE	BRK. MFG.	BRAKE SIZE	FMSI	MERITOR DISC PAD OR BRAKE SHOE	MERITOR GUIDE PIN OR RETURN SPRING KIT	MERITOR CALIPER HWD. KIT OR RETURN SPRING KIT	MERITOR ADJUSTER KIT (LEFT WHEEL)	MERITOR ADJUSTER KIT (RIGHT WHEEL)
GMC / CHEV(Cont.)									
60, 6000 SERIES-20,000-27,500 lb. GVW									
1974 B6P042 School Bus F090	Fa	WG	15 " x 3-1/2 "	1280B - 322	R464004	R40H521	R40H9237	R40H3502	R40H3503
	Fm	WG	15 " x 3-1/2 "	1280 - 463	R700463	R40H521	R40H9201	R404132	R404132[279]
B6P042 School Bus H110, 135, 150	Ra	GM	15 " x 4 "	4640 - 427	R700427	R40H550	R404121	R40H3510	R40H3511
B6P042 School Bus H150, T150, F106	Ra	GM	15 " x 5 "	4639 - 442	R700442	R40H550	R404121	R40H3510	R40H3511
B6P042 School Bus H170, 175, T150, 175	Ra	WG	15 " x 6 "	4596 - 380	R700381	R40H597	R40H9200	R40H3540	R40H3541
	Rm	WG	15 " x 6 "	4596 - 381	R700381	R40H597	R40H9200	R40H3518	R404148
B6P042 School Bus H172, 16244	Ra	WG	15 " x 6 "	4596 - 381	R700381	R40H597	R40H9200	R40H3540	R40H3541
B6P042 School Bus T170, 185, 17100, 17200, 17121, 17221	Ra	WG	15 " x 7 "	4597 - 383	R700383	R40H597	R40H9200	R40H3540	R40H3541
	Rm	WG	15 " x 7 "	4597 - 382	R700383	R40H597	R40H9200	R40H3518	R404148
F050, F055	Fa	GM	14 " x 2-1/2 "	2039 - 299	N/A	R40H599	R40H9206	R40H3500	R40H3501
F070	Fa	WG	15 " x 3 "	1245C - 321	R700321	R40H521	R40H9237	R40H3502	R40H3503
	Fm	WG	15 " x 3 "	1245A - 235	R700235	R40H521	R40H9201	R404132	R404132[279]
F090	Fa	WG	15 " x 3-1/2 "	1280B - 322	R464004	R40H521	R40H9237	R40H3502	R40H3503
H110, 135, 150	Ra	GM	15 " x 4 "	4640 - 427	R700427	R40H550	R404121	R40H3510	R40H3511
H150, T150, F106	Ra	GM	15 " x 5 "	4639 - 442	R700442	R40H550	R404121	R40H3510	R40H3511
H170, 175, T150, 175	Ra	WG	15 " x 6 "	4596 - 380	R700381	R40H597	R40H9200	R40H3540	R40H3541
	Rm	WG	15 " x 6 "	4596 - 381	R700381	R40H597	R40H9200	R40H3518	R404148
H172, 16244	Ra	WG	15 " x 6 "	4596 - 381	R700381	R40H597	R40H9200	R40H3540	R40H3541
T170, 185, 17100, 17200, 17121, 17221	Rm	WG	15 " x 7 "	4597 - 382	R700383	R40H597	R40H9200	R40H3518	R404148
T185, 17100, 17200	Ra	WG	15 " x 7 "	4597 - 383	R700383	R40H597	R40H9200	R40H3540	R40H3541
1973 F090	Fm	WG	15 " x 3-1/2 "	1280 - 463	R700463	R40H521	R40H9201	R404132	R404132[279]
18121, 18221	Rm	WG	16 " x 6 "	1255 - 386	N/A	R40H597	R40H9200	R404149	R404150
22121, 22221	Ra	WG	16 " x 6 "	1255 - 386	N/A	R40H597	R40H9200	-	-
B6P042 School Bus 18121, 18221	Rm	WG	16 " x 6 "	1255 - 386	N/A	R40H597	R40H9200	R404149	R404150
B6P042 School Bus 22121, 22221	Ra	WG	16 " x 6 "	1255 - 386	N/A	R40H597	R40H9200	-	-
	Ra	WG	16 " x 6 "	1255 - 386	N/A	R40H597	R40H9200	-	-
B6P042 School Bus 34DS, 34DT	TRm	WG	15 " x 6 "	4596 - 381	R700381	R40H597	R40H9200	R40H3518	R404148
B6P042 School Bus F050, F055	Fa	GM	14 " x 2-1/2 "	2039 - 299	N/A	R40H599	R40H9206	R40H3500	R40H3501
B6P042 School Bus F070	Fa	WG	15 " x 3 "	1245C - 321	R700321	R40H521	R40H9237	R40H3502	R40H3503
	Fm	WG	15 " x 3 "	1245A - 235	R700235	R40H521	R40H9201	R404132	R404132[279]
B6P042 School Bus F090	Fa	WG	15 " x 3-1/2 "	1280B - 322	R464004	R40H521	R40H9237	R40H3502	R40H3503
	Fm	WG	15 " x 3-1/2 "	1280 - 463	R700463	R40H521	R40H9201	R404132	R404132[279]
B6P042 School Bus H110, 135, 150	Ra	GM	15 " x 4 "	4640 - 427	R700427	R40H550	R404121	R40H3510	R40H3511
B6P042 School Bus H150, T150, F106	Ra	GM	15 " x 5 "	4639 - 442	R700442	R40H550	R404121	R40H3510	R40H3511
B6P042 School Bus H170, 175, T150, 175	Ra	WG	15 " x 6 "	4596 - 380	R700381	R40H597	R40H9200	R40H3540	R40H3541
	Rm	WG	15 " x 6 "	4596 - 381	R700381	R40H597	R40H9200	R40H3518	R404148
B6P042 School Bus H172, 16244	Ra	WG	15 " x 6 "	4596 - 381	R700381	R40H597	R40H9200	R40H3540	R40H3541
B6P042 School Bus T170, 185, 17100, 17200, 17121, 17221	Ra	WG	15 " x 7 "	4597 - 383	R700383	R40H597	R40H9200	R40H3540	R40H3541
	Rm	WG	15 " x 7 "	4597 - 382	R700383	R40H597	R40H9200	R40H3518	R404148
F050, F055	Fa	GM	14 " x 2-1/2 "	2039 - 299	N/A	R40H599	R40H9206	R40H3500	R40H3501

279 - Has 2.29" Adjuster Studs, For 2.60" Studs Use E-4133

MERITOR DRUM OR ROTOR NO.	CALIPER OR CYLINDER BORE SIZE	MERITOR CALIPER OR WHEEL CYLINDER (LEFT)	MERITOR CALIPER OR WHEEL CYLINDER (RIGHT)	MERITOR CALIPER OR WHEEL CYLINDER REPAIR KIT	MERITOR CALIPER PISTON	MERITOR MASTER CYLINDER	MERITOR MASTER CYLINDER KIT	MERITOR BRAKE HOSE (LEFT)	MERITOR BRAKE HOSE (RIGHT)
GMC / CHEV(Cont.)									
60, 6000 SERIES-20,000-27,500 lb. GVW									
N/A	1-1/4 "	R4133376	R4133377	R4166923	NR	-	-	-	-
N/A	1-1/4 "	R4133376	R4133377	R4166923	NR	-	-	-	-
N/A	1-1/2 "	R4133655	R4133656	R415194	NR	-	-	-	-
N/A	1-1/2 "	R4133655	R4133656	R415194	NR	-	-	-	-
N/A	1-5/8 "	R4133338	R4133338	R4166689	NR	-	-	-	-
N/A	1-5/8 "	R4133338	R4133338	R4166689	NR	-	-	-	-
N/A	1-5/8 "	R4133338	R4133338	R4166689	NR	-	-	-	-
N/A	1-3/4 "	R4133400	R4133400	R4166917	NR	-	-	-	-
N/A	1-3/4 "	R4133400	R4133400	R4166917	NR	-	-	-	-
N/A	7/8 "	R4133406	R4133407	R4166820	NR	-	-	-	-
N/A	1-1/8 "	R4133320	R4133321	R4166926	NR	-	-	-	-
N/A	1-1/8 "	R4133320	R4133321	R4166926	NR	-	-	-	-
N/A	1-1/4 "	R4133376	R4133377	R4166923	NR	-	-	-	-
N/A	1-1/2 "	R4133655	R4133656	R415194	NR	-	-	-	-
N/A	1-1/2 "	R4133655	R4133656	R415194	NR	-	-	-	-
N/A	1-5/8 "	R4133338	R4133338	R4166689	NR	-	-	-	-
N/A	1-5/8 "	R4133338	R4133338	R4166689	NR	-	-	-	-
N/A	1-5/8 "	R4133338	R4133338	R4166689	NR	-	-	-	-
N/A	1-3/4 "	R4133400	R4133400	R4166917	NR	-	-	-	-
N/A	1-3/4 "	R4133400	R4133400	R4166917	NR	-	-	-	-
N/A	1-1/4 "	R4133376	R4133377	R4166923	NR	-	-	-	-
N/A	1-7/8 "	R4133420	R4133420	R4166897	NR	-	-	-	-
N/A	1-7/8 "	R4133420	R4133420	R4166897	NR	-	-	-	-
N/A	1-7/8 "	R4133420	R4133420	R4166897	NR	-	-	-	-
N/A	1-7/8 "	R4133420	R4133420	R4166897	NR	-	-	-	-
-	1-7/8 "	R4133420	R4133420	R4166897	NR	-	-	-	-
N/A	1-5/8 "	R4133338	R4133338	R4166689	NR	-	-	-	-
N/A	7/8 "	R4133406	R4133407	R4166820	NR	-	-	-	-
N/A	1-1/8 "	R4133320	R4133321	R4166926	NR	-	-	-	-
N/A	1-1/8 "	R4133320	R4133321	R4166926	NR	-	-	-	-
N/A	1-1/4 "	R4133376	R4133377	R4166923	NR	-	-	-	-
N/A	1-1/4 "	R4133376	R4133377	R4166923	NR	-	-	-	-
N/A	1-1/2 "	R4133655	R4133656	R415194	NR	-	-	-	-
N/A	1-1/2 "	R4133655	R4133656	R415194	NR	-	-	-	-
N/A	1-5/8 "	R4133338	R4133338	R4166689	NR	-	-	-	-
N/A	1-5/8 "	R4133338	R4133338	R4166689	NR	-	-	-	-
N/A	1-5/8 "	R4133338	R4133338	R4166689	NR	-	-	-	-
N/A	1-3/4 "	R4133400	R4133400	R4166917	NR	-	-	-	-
N/A	1-3/4 "	R4133400	R4133400	R4166917	NR	-	-	-	-
N/A	7/8 "	R4133406	R4133407	R4166820	NR	-	-	-	-

MAKE MODEL YEAR AXLE CODE AXLE WEIGHT	AXLE & BRK. TYPE	BRK. MFG.	BRAKE SIZE	FMSI	MERITOR DISC PAD OR BRAKE SHOE	MERITOR GUIDE PIN OR RETURN SPRING KIT	MERITOR CALIPER HWD. KIT OR RETURN SPRING KIT	MERITOR ADJUSTER KIT (LEFT WHEEL)	MERITOR ADJUSTER KIT (RIGHT WHEEL)
GMC / CHEV(Cont.)									
60, 6000 SERIES-20,000-27,500 lb. GVW (Cont.)									
1973									
F070	Fa	WG	15 " x 3 "	1245C - 321	R700321	R40H521	R40H9237	R40H3502	R40H3503
	Fm	WG	15 " x 3 "	1245A - 235	R700235	R40H521	R40H9201	R404132	R404132[279]
F090	Fa	WG	15 " x 3-1/2 "	1280B - 322	R464004	R40H521	R40H9237	R40H3502	R40H3503
H110, 135, 150	Ra	GM	15 " x 4 "	4640 - 427	R700427	R40H550	R404121	R40H3510	R40H3511
H150, T150, F106	Ra	GM	15 " x 5 "	4639 - 442	R700442	R40H550	R404121	R40H3510	R40H3511
H170, 175, T150, 175	Ra	WG	15 " x 6 "	4596 - 380	R700381	R40H597	R40H9200	R40H3540	R40H3541
	Rm	WG	15 " x 6 "	4596 - 381	R700381	R40H597	R40H9200	R40H3518	R404148
H172, 16244	Ra	WG	15 " x 6 "	4596 - 381	R700381	R40H597	R40H9200	R40H3540	R40H3541
T170, 185, 17100, 17200, 17121, 17221	Rm	WG	15 " x 7 "	4597 - 382	R700383	R40H597	R40H9200	R40H3518	R404148
T185, 17100, 17200	Ra	WG	15 " x 7 "	4597 - 383	R700383	R40H597	R40H9200	R40H3540	R40H3541
1972									
7,000lb. GVW	Fa	WG	15 " x 3 "	1245C - 321	R700321	R40H521	R40H9237	R40H3502	R40H3503
	Fa	WG	15 " x 3 "	1245C - 321	R700321	R40H521	R40H9237	R40H3502	R40H3503
	Fm	WG	15 " x 3 "	1245A - 235	R700235	R40H521	R40H9201	R404132	R404132[279]
	Fm	WG	15 " x 3 "	1245A - 235	R700235	R40H521	R40H9201	R404132	R404132[279]
9,000, 11,000lb. GVW	Fa	WG	15 " x 3-1/2 "	1280B - 322	R464004	R40H521	R40H9237	R40H3502	R40H3503
	Fa	WG	15 " x 3-1/2 "	1280B - 322	R464004	R40H521	R40H9237	R40H3502	R40H3503
	Fm	WG	15 " x 3-1/2 "	1280 - 463	R700463	R40H521	R40H9201	R404132	R404132[279]
	Fm	WG	15 " x 3-1/2 "	1280 - 463	R700463	R40H521	R40H9201	R404132	R404132[279]
17,000 lb. GVW	Ra	WG	15 " x 6 "	4596 - 381	R700381	R40H597	R40H9200	R40H3540	R40H3541
	Ra	WG	15 " x 6 "	4596 - 381	R700381	R40H597	R40H9200	R40H3540	R40H3541
	Rm	WG	15 " x 6 "	4596 - 380	R700381	R40H597	R40H9200	R40H3518	R404148
	Rm	WG	15 " x 6 "	4596 - 380	R700381	R40H597	R40H9200	R40H3518	R404148
18,500 lb. GVW	Rm	WG	15 " x 7 "	4597 - 382	R700383	R40H597	R40H9200	R40H3518	R404148
	Rm	WG	15 " x 7 "	4597 - 382	R700383	R40H597	R40H9200	R40H3518	R404148
70, 7000 SERIES									
2001									
C7H042, C7H064 Topkick, Kodiak	Fd	BX		7142 - D225	MD225	R40H5010	R40H5522	NR	NR
	Fd	BX		7142 - D225	MD225	R40H5010	R40H5522	NR	NR
	Fd	DN		7141 - D224	MD224[339]	69310693	60050153[277]	NR	NR
	Fd	DN		7141 - D224	MD224[339]	69310693	60050153[277]	NR	NR
	Fd	Meritor		7636 - D769	MD769	NR	R4011121	NR	NR
	Fd	Meritor		7636 - D769	MD769	NR	R4011121	NR	NR
	Rd	BX		7142 - D225	MD225	R40H5010	R40H5522	NR	NR
	Rd	BX		7142 - D225	MD225	R40H5010	R40H5522	NR	NR
	Rd	DN		7141 - D224	MD224[339]	69310693	60050153[277]	NR	NR
	Rd	DN		7141 - D224	MD224[339]	69310693	60050153[277]	NR	NR
2000									
	Fd	BX		7142 - D225	MD225	R40H5010	R40H5522	NR	NR
	Fd	BX		7142 - D225	MD225	R40H5010	R40H5522	NR	NR
	Fd	DN		7141 - D224	MD224[339]	69310693	60050153[277]	NR	NR
	Fd	DN		7141 - D224	MD224[339]	69310693	60050153[277]	NR	NR
	Fd	Meritor		7636 - D769	MD769	NR	R4011121	NR	NR
	Fd	Meritor		7636 - D769	MD769	NR	R4011121	NR	NR
	Rd	BX		7142 - D225	MD225	R40H5010	R40H5522	NR	NR
	Rd	BX		7142 - D225	MD225	R40H5010	R40H5522	NR	NR
	Rd	DN		7141 - D224	MD224[339]	69310693	60050153[277]	NR	NR
	Rd	DN		7141 - D224	MD224[339]	69310693	60050153[277]	NR	NR
1999									
	Fd	DN		N/A - N/A	MD769	NR	R4011121	NR	NR
	Fd	DN		N/A - N/A	MD769	NR	R4011121	NR	NR
	Fd	DN		N/A - N/A	MD769	NR	R4011121	NR	NR
	Fd	DN		N/A - N/A	MD769	NR	R4011121	NR	NR
	Rd	DN		7141 - D224	MD224[339]	69310693	60050153[277]	NR	NR
	Rd	DN		7141 - D224	MD224[339]	69310693	60050153[277]	NR	NR
1998									
	Fd	DN		N/A - N/A	MD769	NR	R4011121	NR	NR

37 - Also available as a New unit
72 - Phenolic/Steel Face
279 - Has 2.29" Adjuster Studs, For 2.60" Studs Use E-4133
39 - First design, uses steel pistons.
268 - 5 Stud, Hat Shape
339 - Use 69160441 for Disc Pad Retainer Clip
41 - Aluminum piston
277 - For Pad Retainer, Use 69160441
392 - 5 Tapped Holes For ABS Mounting Ring

MERITOR DRUM OR ROTOR NO.	CALIPER OR CYLINDER BORE SIZE	MERITOR CALIPER OR WHEEL CYLINDER (LEFT)	MERITOR CALIPER OR WHEEL CYLINDER (RIGHT)	MERITOR CALIPER OR WHEEL CYLINDER REPAIR KIT	MERITOR CALIPER PISTON	MERITOR MASTER CYLINDER	MERITOR MASTER CYLINDER KIT	MERITOR BRAKE HOSE (LEFT)	MERITOR BRAKE HOSE (RIGHT)
									GMC / CHEV(Cont.)
									60, 6000 SERIES-20,000-27,500 lb. GVW (Cont.)
N/A	1-1/8 "	R4133320	R4133321	R4166926	NR	-	-	-	-
N/A	1-1/8 "	R4133320	R4133321	R4166926	NR	-	-	-	-
N/A	1-1/4 "	R4133376	R4133377	R4166923	NR	-	-	-	-
N/A	1-1/2 "	R4133655	R4133656	R415194	NR	-	-	-	-
N/A	1-1/2 "	R4133655	R4133656	R415194	NR	-	-	-	-
N/A	1-5/8 "	R4133338	R4133338	R4166689	NR	-	-	-	-
N/A	1-5/8 "	R4133338	R4133338	R4166689	NR	-	-	-	-
N/A	1-5/8 "	R4133338	R4133338	R4166689	NR	-	-	-	-
N/A	1-3/4 "	R4133400	R4133400	R4166917	NR	-	-	-	-
N/A	1-3/4 "	R4133400	R4133400	R4166917	NR	-	-	-	-
-	1-1/8 "	R4133320	R4133321	R4166926	NR	-	-	-	-
-	1-1/8 "	R4133320	R4133321	R4166926	NR	-	-	-	-
-	1-1/8 "	R4133320	R4133321	R4166926	NR	-	-	-	-
-	1-1/8 "	R4133320	R4133321	R4166926	NR	-	-	-	-
-	1-1/4 "	R4133376	R4133377	R4166923	NR	-	-	-	-
-	1-1/4 "	R4133376	R4133377	R4166923	NR	-	-	-	-
-	1-1/4 "	R4133376	R4133377	R4166923	NR	-	-	-	-
-	1-1/4 "	R4133376	R4133377	R4166923	NR	-	-	-	-
-	1-5/8 "	R4133338	R4133338	R4166689	NR	-	-	-	-
-	1-5/8 "	R4133338	R4133338	R4166689	NR	-	-	-	-
-	1-5/8 "	R4133338	R4133338	R4166689	NR	-	-	-	-
-	1-5/8 "	R4133338	R4133338	R4166689	NR	-	-	-	-
-	1-3/4 "	R4133400	R4133400	R4166917	NR	-	-	-	-
-	1-3/4 "	R4133400	R4133400	R4166917	NR	-	-	-	-
									70, 7000 SERIES
N/A	2-7/8 "	R42R55250	R42R55250[37]	R4066365	R4090096[72]	-	-	R4577868	R4577868
N/A	2-7/8 "	R42R55250	R42R55250[37]	R4066365	R4090096[72]	-	-	R4577868	R4577868
23-123486-002[268]	2-1/2 "	R424244X	R424244X[37]	60050266	69270757[41]	-	-	R4577868	R4577868
23-123486-002[268]	2-1/2 "	R424244X	R424244X[37]	60050266	69270757[41]	-	-	R4577868	R4577868
23-123485-002[392]	70mm	60050321 / 60450455	60050320 / 60450454[39]	-	-	-	-	R4577868	R4577868
23-123485-002[392]	70mm	60050321 / 60450455	60050320 / 60450454[39]	-	-	-	-	R4577868	R4577868
23-123495-002	2-7/8 "	R42R55250	R42R55250[37]	R4066365	R4090096[72]	-	-	R4510644	R4577864
23-123495-002	2-7/8 "	R42R55250	R42R55250[37]	R4066365	R4090096[72]	-	-	R4510644	R4577864
23-123486-002[268]	2-1/2 "	R424244X	R424244X[37]	60050266	69270757[41]	-	-	R4510644	R4577864
23-123486-002[268]	2-1/2 "	R424244X	R424244X[37]	60050266	69270757[41]	-	-	R4510644	R4577864
N/A	2-7/8 "	R42R55250	R42R55250[37]	R4066365	R4090096[72]	-	-	R4577868	R4577868
N/A	2-7/8 "	R42R55250	R42R55250[37]	R4066365	R4090096[72]	-	-	R4577868	R4577868
23-123486-002[268]	2-1/2 "	R424244X	R424244X[37]	60050266	69270757[41]	-	-	R4577868	R4577868
23-123486-002[268]	2-1/2 "	R424244X	R424244X[37]	60050266	69270757[41]	-	-	R4577868	R4577868
23-123485-002[392]	70mm	60050321 / 60450455	60050320 / 60450454[39]	-	-	-	-	R4577868	R4577868
23-123485-002[392]	70mm	60050321 / 60450455	60050320 / 60450454[39]	-	-	-	-	R4577868	R4577868
23-123495-002	2-7/8 "	R42R55250	R42R55250[37]	R4066365	R4090096[72]	-	-	R4510644	R4577864
23-123495-002	2-7/8 "	R42R55250	R42R55250[37]	R4066365	R4090096[72]	-	-	R4510644	R4577864
23-123486-002[268]	2-1/2 "	R424244X	R424244X[37]	60050266	69270757[41]	-	-	R4510644	R4577864
23-123486-002[268]	2-1/2 "	R424244X	R424244X[37]	60050266	69270757[41]	-	-	R4510644	R4577864
23-123485-002[392]	70mm	60050313	60050312	-	-	-	-	-	-
23-123485-002[392]	70mm	60050313	60050312	-	-	-	-	-	-
23-123485-002[392]	70mm	60050313	60050312	-	-	-	-	-	-
23-123485-002[392]	70mm	60050313	60050312	-	-	-	-	-	-
23-123486-002[268]	2-1/2 "	R424244X	R424244X[37]	60050266	69270757[41]	-	-	-	-
23-123486-002[268]	2-1/2 "	R424244X	R424244X[37]	60050266	69270757[41]	-	-	-	-
23-123485-002[392]	70mm	60050313	60050312	-	-	-	-	-	-

MAKE MODEL YEAR AXLE CODE AXLE WEIGHT	AXLE & BRK. TYPE	BRK. MFG.	BRAKE SIZE	FMSI	MERITOR DISC PAD OR BRAKE SHOE	MERITOR GUIDE PIN OR RETURN SPRING KIT	MERITOR CALIPER HWD. KIT OR RETURN SPRING KIT	MERITOR ADJUSTER KIT (LEFT WHEEL)	MERITOR ADJUSTER KIT (RIGHT WHEEL)
GMC / CHEV(Cont.)									
70, 7000 SERIES(Cont.)									
1998									
	Fd	DN		N/A - N/A	MD769	NR	R4011121	NR	NR
1997									
	Fd	DN		N/A - N/A	MD769	NR	R4011121	NR	NR
	Fd	DN		N/A - N/A	MD769	NR	R4011121	NR	NR
1995									
B7T042 School Bus Chassis	Fd	BX		7142 - D225	MD225	R40H5010	R40H5522	NR	NR
	Fd	DN		7141 - D224	MD224[339]	69310693	60050153[277]	NR	NR
	Rd	BX		7142 - D225	MD225	R40H5010	R40H5522	NR	NR
	Rd	DN		7141 - D224	MD224[339]	69310693	60050153[277]	NR	NR
C7H042, C7H064 Topkick, Kodiak	Fd	BX		7142 - D225	MD225	R40H5010	R40H5522	NR	NR
	Fd	DN		7141 - D224	MD224[339]	69310693	60050153[277]	NR	NR
	Rd	BX		7142 - D225	MD225	R40H5010	R40H5522	NR	NR
	Rd	DN		7141 - D224	MD224[339]	69310693	60050153[277]	NR	NR
	Rd	DN		7141 - D224	MD224[339]	69310693	60050153[277]	NR	NR
1994									
B7T042 School Bus Chassis	Fd	BX		7142 - D225	MD225	R40H5010	R40H5522	NR	NR
	Fd	DN		7141 - D224	MD224[339]	69310693	60050153[277]	NR	NR
	Rd	BX		7142 - D225	MD225	R40H5010	R40H5522	NR	NR
	Rd	DN		7141 - D224	MD224[339]	69310693	60050153[277]	NR	NR
C7H042, C7H064 Topkick, Kodiak	Fd	BX		7142 - D225	MD225	R40H5010	R40H5522	NR	NR
	Fd	DN		7141 - D224	MD224[339]	69310693	60050153[277]	NR	NR
	Rd	BX		7142 - D225	MD225	R40H5010	R40H5522	NR	NR
	Rd	DN		7141 - D224	MD224[339]	69310693	60050153[277]	NR	NR
	Rd	DN		7141 - D224	MD224[339]	69310693	60050153[277]	NR	NR
P7S042, Forward Control Chassis	Fd	BX		7142 - D225	MD225	R40H5010	R40H5522	NR	NR
	Fd	DN		7141 - D224	MD224[339]	69310693	60050153[277]	NR	NR
	Rd	BX		7142 - D225	MD225	R40H5010	R40H5522	NR	NR
	Rd	DN		7141 - D224	MD224[339]	69310693	60050153[277]	NR	NR
1993									
B7T042 School Bus Chassis	Fd	BX		7142 - D225	MD225	R40H5010	R40H5522	NR	NR
	Fd	DN		7141 - D224	MD224[339]	69310693	60050153[277]	NR	NR
	Rd	BX		7142 - D225	MD225	R40H5010	R40H5522	NR	NR
	Rd	DN		7141 - D224	MD224[339]	69310693	60050153[277]	NR	NR
C7H042, C7H064 Topkick, Kodiak	Fd	BX		7142 - D225	MD225	R40H5010	R40H5522	NR	NR
	Fd	DN		7141 - D224	MD224[339]	69310693	60050153[277]	NR	NR
	Rd	BX		7142 - D225	MD225	R40H5010	R40H5522	NR	NR
	Rd	DN		7141 - D224	MD224[339]	69310693	60050153[277]	NR	NR
1992									
	Fd	BX		7142 - D225	MD225	R40H5010	R40H5522	NR	NR
	Fd	BX		7142 - D225	MD225	R40H5010	R40H5522	NR	NR
	Fd	DN		7141 - D224	MD224[339]	69310693	60050153[277]	NR	NR
	Fd	DN		7141 - D224	MD224[339]	69310693	60050153[277]	NR	NR
	Rd	BX		7142 - D225	MD225	R40H5010	R40H5522	NR	NR
	Rd	DN		7141 - D224	MD224[339]	69310693	60050153[277]	NR	NR
1991									
	Fd	BX		7142 - D225	MD225	R40H5010	R40H5522	NR	NR
	Fd	BX		7142 - D225	MD225	R40H5010	R40H5522	NR	NR
	Fd	DN		7141 - D224	MD224[339]	69310693	60050153[277]	NR	NR
	Fd	DN		7141 - D224	MD224[339]	69310693	60050153[277]	NR	NR
	Rd	BX		7142 - D225	MD225	R40H5010	R40H5522	NR	NR
	Rd	DN		7141 - D224	MD224[339]	69310693	60050153[277]	NR	NR
1990									
C7D042, C7D064 Conventional	Fd	BX		7142 - D225	MD225	R40H5010	R40H5522	NR	NR
	Fd	BX		7108 - D184	MD184	R40H5010	R40H5519	NR	NR
	Fd	DN		7141 - D224	MD224[339]	69310693	60050153[277]	NR	NR
	Fd	DN		7141 - D224	MD224[339]	69310693	60050153[277]	NR	NR
	Rd	BX		7142 - D225	MD225	R40H5010	R40H5522	NR	NR
	Rd	DN		7141 - D224	MD224[339]	69310693	60050153[277]	NR	NR

37 - Also available as a New unit
266 - 10 Stud, Hat Shaped
339 - Use 69160441 for Disc Pad Retainer Clip
41 - Aluminum piston
268 - 5 Stud, Hat Shape
392 - 5 Tapped Holes For ABS Mounting Ring
72 - Phenolic/Steel Face
277 - For Pad Retainer, Use 69160441

MERITOR DRUM OR ROTOR NO.	CALIPER OR CYLINDER BORE SIZE	MERITOR CALIPER OR WHEEL CYLINDER (LEFT)	MERITOR CALIPER OR WHEEL CYLINDER (RIGHT)	MERITOR CALIPER OR WHEEL CYLINDER REPAIR KIT	MERITOR CALIPER PISTON	MERITOR MASTER CYLINDER	MERITOR MASTER CYLINDER KIT	MERITOR BRAKE HOSE (LEFT)	MERITOR BRAKE HOSE (RIGHT)
GMC / CHEV(Cont.)									
70, 7000 SERIES(Cont.)									
23-123485-002[392]	70mm	60050313	60050312	-	-	-	-	-	-
23-123485-002[392]	70mm	60050313	60050312	-	-	-	-	-	-
23-123485-002[392]	70mm	60050313	60050312	-	-	-	-	-	-
N/A	2-7/8 "	R42R55250	R42R55250[37]	R4066365	R4090096[72]	-	-	-	-
23-123486-002[268]	2-1/2 "	R424244X	R424244X[37]	60050266	6927075741	-	-	-	-
N/A	2-7/8 "	R42R55250	R42R55250[37]	R4066365	R4090096[72]	-	-	-	-
23-123486-002[268]	2-1/2 "	R424244X	R424244X[37]	60050266	6927075741	-	-	-	-
N/A	2-7/8 "	R42R55250	R42R55250[37]	R4066365	R4090096[72]	-	-	-	-
23-123486-002[268]	2-1/2 "	R424244X	R424244X[37]	60050266	6927075741	-	-	-	-
23-123495-002	2-7/8 "	R42R55250	R42R55250[37]	R4066365	R4090096[72]	-	-	-	-
23-123486-002[268]	2-1/2 "	R424244X	R424244X[37]	60050266	6927075741	-	-	-	-
23-123495-002	2-1/2 "	R424244X	R424244X[37]	60050266	6927075741	-	-	-	-
N/A	2-7/8 "	R42R55250	R42R55250[37]	R4066365	R4090096[72]	-	-	-	-
23-123486-002[268]	2-1/2 "	R424244X	R424244X[37]	60050266	6927075741	-	-	-	-
N/A	2-7/8 "	R42R55250	R42R55250[37]	R4066365	R4090096[72]	-	-	-	-
23-123486-002[268]	2-1/2 "	R424244X	R424244X[37]	60050266	6927075741	-	-	-	-
N/A	2-7/8 "	R42R55250	R42R55250[37]	R4066365	R4090096[72]	-	-	-	-
23-123486-002[268]	2-1/2 "	R424244X	R424244X[37]	60050266	6927075741	-	-	-	-
23-123495-002	2-7/8 "	R42R55250	R42R55250[37]	R4066365	R4090096[72]	-	-	-	-
23-123495-002	2-1/2 "	R424244X	R424244X[37]	60050266	6927075741	-	-	-	-
23-123486-002[268]	2-1/2 "	R424244X	R424244X[37]	60050266	6927075741	-	-	-	-
23-122729-002[266]	2-7/8 "	R42R55250	R42R55250[37]	R4066365	R4090096[72]	-	-	-	-
23-123486-002[268]	2-1/2 "	R424244X	R424244X[37]	60050266	6927075741	-	-	-	-
23-122729-002[266]	2-7/8 "	R42R55250	R42R55250[37]	R4066365	R4090096[72]	-	-	-	-
23-123486-002[268]	2-1/2 "	R424244X	R424244X[37]	60050266	6927075741	-	-	-	-
N/A	2-7/8 "	R42R55250	R42R55250[37]	R4066365	R4090096[72]	-	-	-	-
23-123486-002[268]	2-1/2 "	R424244X	R424244X[37]	60050266	6927075741	-	-	-	-
N/A	2-7/8 "	R42R55250	R42R55250[37]	R4066365	R4090096[72]	-	-	-	-
23-123486-002[268]	2-1/2 "	R424244X	R424244X[37]	60050266	6927075741	-	-	-	-
23-123495-002	2-7/8 "	R42R55250	R42R55250[37]	R4066365	R4090096[72]	-	-	-	-
23-123486-002[268]	2-1/2 "	R424244X	R424244X[37]	60050266	6927075741	-	-	-	-
23-122729-002[266]	2-7/8 "	R42R55250	R42R55250[37]	R4066365	R4090096[72]	-	-	-	-
23-123486-002[268]	2-7/8 "	R42R55250	R42R55250[37]	R4066365	R4090096[72]	-	-	-	-
23-123486-002[268]	2-1/2 "	R424244X	R424244X[37]	60050266	6927075741	-	-	-	-
23-122729-002[266]	2-1/2 "	R424244X	R424244X[37]	60050266	6927075741	-	-	-	-
23-122729-002[266]	2-7/8 "	R42R55250	R42R55250[37]	R4066365	R4090096[72]	-	-	-	-
23-122729-002[266]	2-1/2 "	R424244X	R424244X[37]	60050266	6927075741	-	-	-	-
23-123486-002[268]	2-7/8 "	R42R55250	R42R55250[37]	R4066365	R4090096[72]	-	-	-	-
23-122729-002[266]	2-7/8 "	R42R55250	R42R55250[37]	R4066365	R4090096[72]	-	-	-	-
23-122729-002[266]	2-1/2 "	R424244X	R424244X[37]	60050266	6927075741	-	-	-	-
23-123486-002[268]	2-1/2 "	R424244X	R424244X[37]	60050266	6927075741	-	-	-	-
23-122729-002[266]	2-7/8 "	R42R55250	R42R55250[37]	R4066365	R4090096[72]	-	-	-	-
23-122729-002[266]	2-1/2 "	R424244X	R424244X[37]	60050266	6927075741	-	-	-	-
23-122729-002[266]	2-7/8 "	R42R55250	R42R55250[37]	R4066365	R4090096[72]	-	-	-	-
N/A	3-3/8 "	R42R55099	R42R55098[37]	R4066780	R4090021	-	-	-	-
N/A	2-1/2 "	R424244X	R424244X[37]	60050266	6927075741	-	-	-	-
23-123486-002[268]	2-1/2 "	R424244X	R424244X[37]	60050266	6927075741	-	-	-	-
23-122729-002[266]	2-7/8 "	R42R55250	R42R55250[37]	R4066365	R4090096[72]	-	-	R4577482	R4577482
23-122729-002[266]	2-1/2 "	R424244X	R424244X[37]	60050266	6927075741	-	-	R4577482	R4577482

MAKE MODEL YEAR AXLE CODE AXLE WEIGHT	AXLE & BRK. TYPE	BRK. MFG.	BRAKE SIZE	FMSI	MERITOR DISC PAD OR BRAKE SHOE	MERITOR GUIDE PIN OR RETURN SPRING KIT	MERITOR CALIPER HWD. KIT OR RETURN SPRING KIT	MERITOR ADJUSTER KIT (LEFT WHEEL)	MERITOR ADJUSTER KIT (RIGHT WHEEL)
GMC / CHEV(Cont.)									
70, 7000 SERIES(Cont.)									
1990									
	Rd	DN		7141 - D224	MD224[339]	69310693	60050153[277]	NR	NR
S7T042 P-Chassis	Fd	BX		7142 - D225	MD225	R40H5010	R40H5522	NR	NR
	Fd	BX		7142 - D225	MD225	R40H5010	R40H5522	NR	NR
	Rd	BX		7142 - D225	MD225	R40H5010	R40H5522	NR	NR
	Rd	BX		7142 - D225	MD225	R40H5010	R40H5522	NR	NR
	Rd	BX		7142 - D225	MD225	R40H5010	R40H5522	NR	NR
	Rd	BX		7142 - D225	MD225	R40H5010	R40H5522	NR	NR
C7D042, C7D064 Conventional 19,000, 21,000, 23,000lb. GVW	Rd	DN		7141 - D224	MD224[339]	69310693	60050153[277]	NR	NR
1989 C7D042, C7D064 Conventional	Fd	BX		7108 - D184	MD184	R40H5010	R40H5519	NR	NR
	Fd	BX		7142 - D225	MD225	R40H5010	R40H5522	NR	NR
	Fd	DN		7141 - D224	MD224[339]	69310693	60050153[277]	NR	NR
	Fd	DN		7141 - D224	MD224[339]	69310693	60050153[277]	NR	NR
	Rd	BX		7142 - D225	MD225	R40H5010	R40H5522	NR	NR
	Rd	DN		7141 - D224	MD224[339]	69310693	60050153[277]	NR	NR
	Rd	DN		7141 - D224	MD224[339]	69310693	60050153[277]	NR	NR
S7T042 P-Chassis	Fd	BX		7142 - D225	MD225	R40H5010	R40H5522	NR	NR
	Fd	BX		7142 - D225	MD225	R40H5010	R40H5522	NR	NR
	Rd	BX		7142 - D225	MD225	R40H5010	R40H5522	NR	NR
	Rd	BX		7142 - D225	MD225	R40H5010	R40H5522	NR	NR
	Rd	BX		7142 - D225	MD225	R40H5010	R40H5522	NR	NR
	Rd	BX		7142 - D225	MD225	R40H5010	R40H5522	NR	NR
C7D042, C7D064 Conventional 19,000, 21,000, 23,000lb. GVW	Rd	DN		7141 - D224	MD224[339]	69310693	60050153[277]	NR	NR
1988 C7D042, C7D064 Conventional	Fd	BX		7142 - D225	MD225	R40H5010	R40H5522	NR	NR
	Fd	BX		7108 - D184	MD184	R40H5010	R40H5519	NR	NR
	Fd	DN		7141 - D224	MD224[339]	69310693	60050153[277]	NR	NR
	Fd	DN		7141 - D224	MD224[339]	69310693	60050153[277]	NR	NR
	Rd	BX		7142 - D225	MD225	R40H5010	R40H5522	NR	NR
	Rd	DN		7141 - D224	MD224[339]	69310693	60050153[277]	NR	NR
S7T042 P-Chassis	Fd	BX		7142 - D225	MD225	R40H5010	R40H5522	NR	NR
	Fd	BX		7142 - D225	MD225	R40H5010	R40H5522	NR	NR
	Rd	BX		7142 - D225	MD225	R40H5010	R40H5522	NR	NR
	Rd	BX		7142 - D225	MD225	R40H5010	R40H5522	NR	NR
S7T042 P-Chassis 7,000 lb.	Fd	BX		7142 - D225	MD225	R40H5010	R40H5522	NR	NR
	Fd	BX		7142 - D225	MD225	R40H5010	R40H5522	NR	NR
S7T042 P-Chassis 9,500 lb.	Fd	BX		7142 - D225	MD225	R40H5010	R40H5522	NR	NR
	Fd	BX		7142 - D225	MD225	R40H5010	R40H5522	NR	NR
C7D042, C7D064 Conventional 19,000, 21,000, 23,000lb. GVW	Rd	DN		7141 - D224	MD224[339]	69310693	60050153[277]	NR	NR
1987	Rd	BX		7142 - D225	MD225	R40H5010	R40H5522	NR	NR
C7D042, C7D064 Conventional	Fd	BX		7142 - D225	MD225	R40H5010	R40H5522	NR	NR
	Fd	BX		7108 - D184	MD184	R40H5010	R40H5519	NR	NR
	Fd	BX		7142 - D225	MD225	R40H5010	R40H5522	NR	NR
	Fd	BX		7108 - D184	MD184	R40H5010	R40H5519	NR	NR
	Fd	DN		7141 - D224	MD224[339]	69310693	60050153[277]	NR	NR
	Fd	DN		7141 - D224	MD224[339]	69310693	60050153[277]	NR	NR
	Fd	DN		7141 - D224	MD224[339]	69310693	60050153[277]	NR	NR
	Fd	DN		7141 - D224	MD224[339]	69310693	60050153[277]	NR	NR
	Rd	DN		7141 - D224	MD224[339]	69310693	60050153[277]	NR	NR

37 - Also available as a New unit
41 - Aluminum piston
268 - 5 Stud, Hat Shape
39 - First design, uses steel pistons.
72 - Phenolic/Steel Face
277 - For Pad Retainer, Use 69160441
40 - For chrome plated steel version, use R4090070P
266 - 10 Stud, Hat Shaped
286 - Budd Rotor with 10 Studs

MERITOR DRUM OR ROTOR NO.	CALIPER OR CYLINDER BORE SIZE	MERITOR CALIPER OR WHEEL CYLINDER (LEFT)	MERITOR CALIPER OR WHEEL CYLINDER (RIGHT)	MERITOR CALIPER OR WHEEL CYLINDER REPAIR KIT	MERITOR CALIPER PISTON	MERITOR MASTER CYLINDER	MERITOR MASTER CYLINDER KIT	MERITOR BRAKE HOSE (LEFT)	MERITOR BRAKE HOSE (RIGHT)
GMC / CHEV(Cont.)									
70, 7000 SERIES(Cont.)									
23-123486-002[268]	2-1/2 "	R424244X	R424244X[37]	60050266	69270757[41]	-	-	R4577482	R4577482
23-122729-002[266]	2-7/8 "	R42R55250	R42R55250[37]	R4066365	R4090096[72]	-	-	-	-
23-122729-002[266]	2-7/8 "	R42R55250	R42R55250[37]	R4066365	R4090096[72]	-	-	-	-
23-122729-002[266]	2-7/8 "	R42R55250	R42R55250[37]	R4066365	R4090096[72]	-	-	-	-
23-122729-002[266]	2-7/8 "	R42R55250	R42R55250[37]	R4066365	R4090096[72]	-	-	-	-
23-122729-002[266]	2-7/8 "	R42R55250	R42R55250[37]	R4066365	R4090096[72]	-	-	-	-
23-122729-002[266]	2-7/8 "	R42R55250	R42R55250[37]	R4066365	R4090096[72]	-	-	-	-
23-122693-002	2-1/2 "	R424244X	R424244X[37]	60050266	69270757[41]	-	-	R4577482	R4577482
23-122729-002[266]	3-3/8 "	R42R55099	R42R55098[37]	R4066780	R4090021	-	-	-	-
23-122729-002[266]	2-7/8 "	R42R55250	R42R55250[37]	R4066365	R4090096[72]	-	-	-	-
23-122729-002[266]	2-1/2 "	R424244X	R424244X[37]	60050266	69270757[41]	-	-	-	-
23-123486-002[268]	2-1/2 "	R424244X	R424244X[37]	60050266	69270757[41]	-	-	-	-
23-122729-002[266]	2-7/8 "	R42R55250	R42R55250[37]	R4066365	R4090096[72]	-	-	-	-
23-122729-002[266]	2-1/2 "	R424244X	R424244X[37]	60050266	69270757[41]	-	-	-	-
23-123486-002[268]	2-1/2 "	R424244X	R424244X[37]	60050266	69270757[41]	-	-	-	-
23-122729-002[266]	2-7/8 "	R42R55250	R42R55250[37]	R4066365	R4090096[72]	-	-	-	-
23-122729-002[266]	2-7/8 "	R42R55250	R42R55250[37]	R4066365	R4090096[72]	-	-	-	-
23-122729-002[266]	2-7/8 "	R42R55250	R42R55250[37]	R4066365	R4090096[72]	-	-	-	-
23-122729-002[266]	2-7/8 "	R42R55250	R42R55250[37]	R4066365	R4090096[72]	-	-	-	-
23-122729-002[266]	2-7/8 "	R42R55250	R42R55250[37]	R4066365	R4090096[72]	-	-	-	-
23-122693-002	2-1/2 "	R424244X	R424244X[37]	60050266	69270757[41]	-	-	-	-
23-122729-002[266]	2-7/8 "	R429218X	R429218X[39]	R406532	R4090070[40]	-	-	-	-
23-122729-002[266]	3-3/8 "	R42R55099	R42R55098[37]	R4066780	R4090021	-	-	-	-
23-122729-002[266]	2-1/2 "	R424244X	R424244X[37]	60050266	69270757[41]	-	-	-	-
23-123486-002[268]	2-1/2 "	R424244X	R424244X[37]	60050266	69270757[41]	-	-	-	-
23-122729-002[266]	2-7/8 "	R429218X	R429218X[39]	R406532	R4090070[40]	-	-	-	-
23-123486-002[268]	2-1/2 "	R424244X	R424244X[37]	60050266	69270757[41]	-	-	-	-
R44141583[287]	2-7/8 "	R429218X	R429218X[39]	R406532	R4090070[40]	-	-	-	-
23-123468-002[288]	2-7/8 "	R429218X	R429218X[39]	R406532	R4090070[40]	-	-	-	-
23-122729-002[266]	2-7/8 "	R429218X	R429218X[39]	R406532	R4090070[40]	-	-	-	-
23-122729-002[266]	2-7/8 "	R429218X	R429218X[39]	R406532	R4090070[40]	-	-	-	-
23-123486-002[268]	2-7/8 "	R429218X	R429218X[39]	R406532	R4090070[40]	-	-	-	-
N/A[286]	2-7/8 "	R429218X	R429218X[39]	R406532	R4090070[40]	-	-	-	-
-	2-7/8 "	R429218X	R429218X[39]	R406532	R4090070[40]	-	-	-	-
23-122729-002[266]	2-7/8 "	R429218X	R429218X[39]	R406532	R4090070[40]	-	-	-	-
23-122693-002	2-1/2 "	R424244X	R424244X[37]	60050266	69270757[41]	-	-	-	-
23-122729-002[266]	2-7/8 "	R429218X	R429218X[39]	R406532	R4090070[40]	-	-	R4577482	R4577482
23-122729-002[266]	2-7/8 "	R42R55250	R42R55250[37]	R4066365	R4090096[72]	R4111993[302]	R4122386	-	-
23-122729-002[266]	3-3/8 "	R42R55099	R42R55098[37]	R4066780	R4090021	R4111993[302]	R4122386	-	-
23-122729-002[266]	2-7/8 "	R42R55250	R42R55250[37]	R4066365	R4090096[72]	R4111993[302]	R4122386	-	-
23-122729-002[266]	3-3/8 "	R42R55099	R42R55098[37]	R4066780	R4090021	R4111993[302]	R4122386	-	-
23-122729-002[266]	2-1/2 "	R424244X	R424244X[37]	60050266	69270757[41]	R4111993[302]	R4122386	-	-
23-122729-002[266]	2-1/2 "	R424244X	R424244X[37]	60050266	69270757[41]	R4111993[302]	R4122386	-	-
23-123486-002[268]	2-1/2 "	R424244X	R424244X[37]	60050266	69270757[41]	R4111993[302]	R4122386	-	-
23-123486-002[268]	2-1/2 "	R424244X	R424244X[37]	60050266	69270757[41]	R4111993[302]	R4122386	-	-
23-123486-002[268]	2-1/2 "	R424244X	R424244X[37]	60050266	69270757[41]	-	-	R4577482	R4577482

287 - Budd rotor with 6 studs
288 - Dayton Rotor with 6 Studs
302 - Power Brakes, Dual System
339 - Use 69160441 for Disc Pad Retainer Clip

MAKE MODEL YEAR AXLE CODE AXLE WEIGHT	AXLE & BRK. TYPE	BRK. MFG.	BRAKE SIZE	FMSI	MERITOR DISC PAD OR BRAKE SHOE	MERITOR GUIDE PIN OR RETURN SPRING KIT	MERITOR CALIPER HWD. KIT OR RETURN SPRING KIT	MERITOR ADJUSTER KIT (LEFT WHEEL)	MERITOR ADJUSTER KIT (RIGHT WHEEL)
GMC / CHEV(Cont.)									
70, 7000 SERIES(Cont.)									
1987									
	Rd	DN		7141 - D224	MD224[339]	69310693	60050153[277]	NR	NR
	Rd	DN		7141 - D224	MD224[339]	69310693	60050153[277]	NR	NR
	Rd	DN		7141 - D224	MD224[339]	69310693	60050153[277]	NR	NR
S7T042 P-Chassis	Fd	BX		7142 - D225	MD225	R40H5010	R40H5522	NR	NR
	Fd	BX		7142 - D225	MD225	R40H5010	R40H5522	NR	NR
	Rd	BX		7142 - D225	MD225	R40H5010	R40H5522	NR	NR
	Rd	BX		7142 - D225	MD225	R40H5010	R40H5522	NR	NR
S7T042 P-Chassis 7,000 lb.	Fd	BX		7142 - D225	MD225	R40H5010	R40H5522	NR	NR
	Fd	BX		7142 - D225	MD225	R40H5010	R40H5522	NR	NR
S7T042 P-Chassis 9,000, 12,000lb. GVW	Fd	BX		7142 - D225	MD225	R40H5010	R40H5522	NR	NR
	Fd	BX		7142 - D225	MD225	R40H5010	R40H5522	NR	NR
C7D042, C7D064 Conventional 19,000, 21,000, 23,000lb. GVW	Rd	DN		7141 - D224	MD224[339]	69310693	60050153[277]	NR	NR
	Rd	DN		7141 - D224	MD224[339]	69310693	60050153[277]	NR	NR
1986	Rd	BX		7142 - D225	MD225	R40H5010	R40H5522	NR	NR
C7D042, C7D064 Conventional	Fd	BX		7142 - D225	MD225	R40H5010	R40H5522	NR	NR
	Fd	BX		7108 - D184	MD184	R40H5010	R40H5519	NR	NR
	Fd	BX		7108 - D184	MD184	R40H5010	R40H5519	NR	NR
	Fd	BX		7142 - D225	MD225	R40H5010	R40H5522	NR	NR
	Fd	DN		7141 - D224	MD224[339]	69310693	60050153[277]	NR	NR
	Fd	DN		7141 - D224	MD224[339]	69310693	60050153[277]	NR	NR
	Rd	BX		7142 - D225	MD225	R40H5010	R40H5522	NR	NR
	Rd	BX		7142 - D225	MD225	R40H5010	R40H5522	NR	NR
	Rd	DN		7141 - D224	MD224[339]	69310693	60050153[277]	NR	NR
	Rd	DN		7141 - D224	MD224[339]	69310693	60050153[277]	NR	NR
	Rd	DN		7141 - D224	MD224[339]	69310693	60050153[277]	NR	NR
S7T042 P-Chassis	Fd	BX		7142 - D225	MD225	R40H5010	R40H5522	NR	NR
	Fd	BX		7142 - D225	MD225	R40H5010	R40H5522	NR	NR
	Rd	BX		7142 - D225	MD225	R40H5010	R40H5522	NR	NR
	Rd	BX		7142 - D225	MD225	R40H5010	R40H5522	NR	NR
S7T042 P-Chassis 7,000 lb.	Fd	BX		7142 - D225	MD225	R40H5010	R40H5522	NR	NR
	Fd	BX		7142 - D225	MD225	R40H5010	R40H5522	NR	NR
S7T042 P-Chassis 9,000, 12,000lb. GVW	Fd	BX		7142 - D225	MD225	R40H5010	R40H5522	NR	NR
	Fd	BX		7142 - D225	MD225	R40H5010	R40H5522	NR	NR
C7D042, C7D064 Conventional 19,000, 21,000, 23,000lb. GVW	Rd	DN		7141 - D224	MD224[339]	69310693	60050153[277]	NR	NR
1985	Rd	BX		7142 - D225	MD225	R40H5010	R40H5522	NR	NR
C7D042, C7D064 Conventional	Fd	DN		7141 - D224	MD224[339]	69310693	60050153[277]	NR	NR
	Fd	DN		7141 - D224	MD224[339]	69310693	60050153[277]	NR	NR
	Rd	BX		7142 - D225	MD225	R40H5010	R40H5522	NR	NR
	Rd	BX		7142 - D225	MD225	R40H5010	R40H5522	NR	NR
S7T042 P-Chassis	Fd	BX		7142 - D225	MD225	R40H5010	R40H5522	NR	NR
	Fd	BX		7142 - D225	MD225	R40H5010	R40H5522	NR	NR
	Rd	BX		7142 - D225	MD225	R40H5010	R40H5522	NR	NR
	Rd	BX		7142 - D225	MD225	R40H5010	R40H5522	NR	NR
S7T042 P-Chassis 7,000 lb.	Fd	BX		7142 - D225	MD225	R40H5010	R40H5522	NR	NR
	Fd	BX		7142 - D225	MD225	R40H5010	R40H5522	NR	NR
S7T042 P-Chassis 9,000, 12,000lb. GVW	Fd	BX		7142 - D225	MD225	R40H5010	R40H5522	NR	NR
	Fd	BX		7142 - D225	MD225	R40H5010	R40H5522	NR	NR

37 - Also available as a New unit
41 - Aluminum piston
268 - 5 Stud, Hat Shape
39 - First design, uses steel pistons.
72 - Phenolic/Steel Face
277 - For Pad Retainer, Use 69160441
40 - For chrome plated steel version, use R4090070P
266 - 10 Stud, Hat Shaped
286 - Budd Rotor with 10 Studs

MERITOR DRUM OR ROTOR NO.	CALIPER OR CYLINDER BORE SIZE	MERITOR CALIPER OR WHEEL CYLINDER (LEFT)	MERITOR CALIPER OR WHEEL CYLINDER (RIGHT)	MERITOR CALIPER OR WHEEL CYLINDER REPAIR KIT	MERITOR CALIPER PISTON	MERITOR MASTER CYLINDER	MERITOR MASTER CYLINDER KIT	MERITOR BRAKE HOSE (LEFT)	MERITOR BRAKE HOSE (RIGHT)
GMC / CHEV(Cont.)									
70, 7000 SERIES(Cont.)									
23-123486-002[268]	2-1/2 "	R424244X	R424244X[37]	60050266	69270757[41]	-	-	R4577482	R4577482
23-122729-002[266]	2-1/2 "	R424244X	R424244X[37]	60050266	69270757[41]	-	-	R4577482	R4577482
23-122729-002[266]	2-1/2 "	R424244X	R424244X[37]	60050266	69270757[41]	-	-	R4577482	R4577482
23-123468-002[288]	2-7/8 "	R429218X	R429218X[39]	R406532	R4090070[40]	-	-	-	-
R44141583[287]	2-7/8 "	R429218X	R429218X[39]	R406532	R4090070[40]	-	-	-	-
23-122729-002[266]	2-7/8 "	R429218X	R429218X[39]	R406532	R4090070[40]	-	-	R4577482	R4577482
23-122729-002[266]	2-7/8 "	R429218X	R429218X[39]	R406532	R4090070[40]	-	-	R4577482	R4577482
23-123486-002[268]	2-7/8 "	R429218X	R429218X[39]	R406532	R4090070[40]	-	-	-	-
N/A[286]	2-7/8 "	R429218X	R429218X[39]	R406532	R4090070[40]	-	-	-	-
-	2-7/8 "	R429218X	R429218X[39]	R406532	R4090070[40]	-	-	-	-
23-122729-002[266]	2-7/8 "	R429218X	R429218X[39]	R406532	R4090070[40]	-	-	-	-
23-122693-002	2-1/2 "	R424244X	R424244X[37]	60050266	69270757[41]	-	-	R4577482	R4577482
23-122693-002	2-1/2 "	R424244X	R424244X[37]	60050266	69270757[41]	-	-	R4577482	R4577482
23-122729-002[266]	2-7/8 "	R429218X	R429218X[39]	R406532	R4090070[40]	-	-	R4577482	R4577482
23-122729-002[266]	2-7/8 "	R42R55250	R42R55250[37]	R4066365	R4090096[72]	R4111993[302]	R4122386	-	-
N/A	3-3/8 "	R42R55099	R42R55098[37]	R4066780	R4090021	R4111993[302]	R4122386	-	-
N/A	3-3/8 "	R42R55099	R42R55098[37]	R4066780	R4090021	R4111993[302]	R4122386	-	-
23-122729-002[266]	2-7/8 "	R42R55250	R42R55250[37]	R4066365	R4090096[72]	R4111993[302]	R4122386	-	-
23-123486-002[268]	2-1/2 "	R424244X	R424244X[37]	60050266	69270757[41]	R4111993[302]	R4122386	-	-
23-122729-002[266]	2-1/2 "	R424244X	R424244X[37]	60050266	69270757[41]	R4111993[302]	R4122386	-	-
23-122729-002[266]	2-7/8 "	R429218X	R429218X[39]	R406532	R4090070[40]	-	-	R4577482	R4577482
23-122729-002[266]	2-7/8 "	R429218X	R429218X[39]	R406532	R4090070[40]	-	-	R4577482	R4577482
23-123486-002[268]	2-1/2 "	R424244X	R424244X[37]	60050266	69270757[41]	-	-	R4577482	R4577482
23-122729-002[266]	2-1/2 "	R424244X	R424244X[37]	60050266	69270757[41]	-	-	R4577482	R4577482
23-123486-002[268]	2-1/2 "	R424244X	R424244X[37]	60050266	69270757[41]	-	-	R4577482	R4577482
23-123468-002[288]	2-7/8 "	R429218X	R429218X[39]	R406532	R4090070[40]	-	-	-	-
R44141583[287]	2-7/8 "	R429218X	R429218X[39]	R406532	R4090070[40]	-	-	-	-
23-122729-002[266]	2-7/8 "	R429218X	R429218X[39]	R406532	R4090070[40]	-	-	R4577482	R4577482
23-122729-002[266]	2-7/8 "	R429218X	R429218X[39]	R406532	R4090070[40]	-	-	R4577482	R4577482
23-123486-002[268]	2-7/8 "	R429218X	R429218X[39]	R406532	R4090070[40]	-	-	-	-
N/A[286]	2-7/8 "	R429218X	R429218X[39]	R406532	R4090070[40]	-	-	-	-
23-122729-002[266]	2-7/8 "	R429218X	R429218X[39]	R406532	R4090070[40]	-	-	-	-
-	2-7/8 "	R429218X	R429218X[39]	R406532	R4090070[40]	-	-	-	-
23-122693-002	2-1/2 "	R424244X	R424244X[37]	60050266	69270757[41]	-	-	R4577482	R4577482
23-122729-002[266]	2-7/8 "	R429218X	R429218X[39]	R406532	R4090070[40]	-	-	R4577482	R4577482
23-123486-002[268]	2-1/2 "	R424244X	R424244X[37]	60050266	69270757[41]	R4111993[302]	R4122386	-	-
23-123486-002[268]	2-1/2 "	R424244X	R424244X[37]	60050256	69270757[41]	R4112066[306]	R4110406	N/A	N/A
23-122729-002[266]	2-7/8 "	R429218X	R429218X[39]	R406532	R4090070[40]	-	-	R4577482	R4577482
23-122729-002[266]	2-7/8 "	R429218X	R429218X[39]	R406532	R4090070[40]	-	-	R4577482	R4577482
R44141583[287]	2-7/8 "	R429218X	R429218X[39]	R406532	R4090070[40]	-	-	-	-
23-123468-002[288]	2-7/8 "	R429218X	R429218X[39]	R406532	R4090070[40]	-	-	-	-
23-122729-002[266]	2-7/8 "	R429218X	R429218X[39]	R406532	R4090070[40]	-	-	R4577482	R4577482
23-122729-002[266]	2-7/8 "	R429218X	R429218X[39]	R406532	R4090070[40]	-	-	R4577482	R4577482
23-123486-002[268]	2-7/8 "	R429218X	R429218X[39]	R406532	R4090070[40]	-	-	-	-
N/A[286]	2-7/8 "	R429218X	R429218X[39]	R406532	R4090070[40]	-	-	-	-
23-122729-002[266]	2-7/8 "	R429218X	R429218X[39]	R406532	R4090070[40]	-	-	-	-
-	2-7/8 "	R429218X	R429218X[39]	R406532	R4090070[40]	-	-	-	-

287 - Budd rotor with 6 studs
288 - Dayton Rotor with 6 Studs
302 - Power Brakes, Dual System
306 - Power Brakes, Single System
339 - Use 69160441 for Disc Pad Retainer Clip

MAKE MODEL YEAR AXLE CODE AXLE WEIGHT	AXLE & BRK. TYPE	BRK. MFG.	BRAKE SIZE	FMSI	MERITOR DISC PAD OR BRAKE SHOE	MERITOR GUIDE PIN OR RETURN SPRING KIT	MERITOR CALIPER HWD. KIT OR RETURN SPRING KIT	MERITOR ADJUSTER KIT (LEFT WHEEL)	MERITOR ADJUSTER KIT (RIGHT WHEEL)
GMC / CHEV(Cont.)									
70, 7000 SERIES(Cont.)									
1984									
	Rd	BX		7142 - D225	MD225	R40H5010	R40H5522	NR	NR
C7D042, C7D064									
Conventional	Fd	DN		7141 - D224	MD224[339]	69310693	60050153[277]	NR	NR
	Fd	DN		7141 - D224	MD224[339]	69310693	60050153[277]	NR	NR
	Rd	BX		7142 - D225	MD225	R40H5010	R40H5522	NR	NR
	Rd	BX		7142 - D225	MD225	R40H5010	R40H5522	NR	NR
S7T042 P-Chassis	Fd	BX		7142 - D225	MD225	R40H5010	R40H5522	NR	NR
	Fd	BX		7142 - D225	MD225	R40H5010	R40H5522	NR	NR
	Rd	BX		7142 - D225	MD225	R40H5010	R40H5522	NR	NR
	Rd	BX		7142 - D225	MD225	R40H5010	R40H5522	NR	NR
S7T042 P-Chassis									
7,000 lb.	Fd	BX		7142 - D225	MD225	R40H5010	R40H5522	NR	NR
	Fd	BX		7142 - D225	MD225	R40H5010	R40H5522	NR	NR
S7T042 P-Chassis									
9,000, 12,000lb. GVW	Fd	BX		7142 - D225	MD225	R40H5010	R40H5522	NR	NR
	Fd	BX		7142 - D225	MD225	R40H5010	R40H5522	NR	NR
1983									
	Fd	DN		7141 - D224	MD224[339]	69310693	60050153[277]	NR	NR
	Rd	BX		7142 - D225	MD225	R40H5010	R40H5522	NR	NR
C7D042, C7D064									
Conventional	Fd	DN		7141 - D224	MD224[339]	69310693	60050153[277]	NR	NR
	Fd	DN		7141 - D224	MD224[339]	69310693	60050153[277]	NR	NR
	Rd	BX		7142 - D225	MD225	R40H5010	R40H5522	NR	NR
	Rd	BX		7142 - D225	MD225	R40H5010	R40H5522	NR	NR
S7T042 P-Chassis	Fd	BX		7142 - D225	MD225	R40H5010	R40H5522	NR	NR
	Fd	BX		7142 - D225	MD225	R40H5010	R40H5522	NR	NR
	Rd	BX		7142 - D225	MD225	R40H5010	R40H5522	NR	NR
	Rd	BX		7142 - D225	MD225	R40H5010	R40H5522	NR	NR
S7T042 P-Chassis									
7,000 lb.	Fd	BX		7142 - D225	MD225	R40H5010	R40H5522	NR	NR
	Fd	BX		7142 - D225	MD225	R40H5010	R40H5522	NR	NR
S7T042 P-Chassis									
9,000, 12,000lb. GVW	Fd	BX		7142 - D225	MD225	R40H5010	R40H5522	NR	NR
	Fd	BX		7142 - D225	MD225	R40H5010	R40H5522	NR	NR
1982									
18121, 18221, 22121,									
22221	Rm	WG	16 " x 6 "	1255 - 386	N/A	R40H597	R40H9200	R404149	R404150
18121, 18221, 22121,									
22223	Ra	WG	16 " x 6 "	1255 - 386	N/A	R40H597	R40H9200	-	-
34DS, 34DT	TRm	WG	15 " x 6 "	4596 - 381	R700381	R40H597	R40H9200	R40H3518	R404148
C7D042, C7D064									
Conventional									
18121, 18221, 22121,									
22221	Ra	WG	16 " x 6 "	1255 - 386	N/A	R40H597	R40H9200	-	-
	Ra	WG	16 " x 6 "	1255 - 386	N/A	R40H597	R40H9200	-	-
	Rm	WG	16 " x 6 "	1255 - 386	N/A	R40H597	R40H9200	R404149	R404150
	Rm	WG	16 " x 6 "	1255 - 386	N/A	R40H597	R40H9200	R404149	R404150
C7D042, C7D064									
Conventional									
34DS, 34DT	TRm	WG	15 " x 6 "	4596 - 381	R700381	R40H597	R40H9200	R40H3518	R404148
	TRm	WG	15 " x 6 "	4596 - 381	R700381	R40H597	R40H9200	R40H3518	R404148
C7D042, C7D064									
Conventional									
F070	Fa	WG	15 " x 3 "	1245C - 321	R700321	R40H521	R40H9237	R40H3502	R40H3503
	Fm	WG	15 " x 3 "	1245A - 235	R700235	R40H521	R40H9201	R404132	R404132[279]
C7D042, C7D064									
Conventional									
F090, F120	Fa	WG	15 " x 3-1/2 "	1280B - 322	R464004	R40H521	R40H9237	R40H3502	R40H3503
	Fm	WG	15 " x 3-1/2 "	1280 - 463	R700463	R40H521	R40H9201	R404132	R404132[279]
C7D042, C7D064									
Conventional									
H170, 175, T170, 175	Ra	WG	15 " x 6 "	4596 - 381	R700381	R40H597	R40H9200	R40H3540	R40H3541
	Ra	WG	15 " x 6 "	4596 - 381	R700381	R40H597	R40H9200	R40H3540	R40H3541

37 - Also available as a New unit
41 - Aluminum piston
277 - For Pad Retainer, Use 69160441
39 - First design, uses steel pistons.
266 - 10 Stud, Hat Shaped
279 - Has 2.29" Adjuster Studs, For 2.60" Studs Use E-4133
40 - For chrome plated steel version, use R4090070P
268 - 5 Stud, Hat Shape
286 - Budd Rotor with 10 Studs

MERITOR DRUM OR ROTOR NO.	CALIPER OR CYLINDER BORE SIZE	MERITOR CALIPER OR WHEEL CYLINDER (LEFT)	MERITOR CALIPER OR WHEEL CYLINDER (RIGHT)	MERITOR CALIPER OR WHEEL CYLINDER REPAIR KIT	MERITOR CALIPER PISTON	MERITOR MASTER CYLINDER	MERITOR MASTER CYLINDER KIT	MERITOR BRAKE HOSE (LEFT)	MERITOR BRAKE HOSE (RIGHT)
GMC / CHEV(Cont.)									
70, 7000 SERIES(Cont.)									
23-122729-002[266]	2-7/8 "	R429218X	R429218X[39]	R406532	R4090070[40]	-	-	R4577482	R4577482
23-123486-002[268]	2-1/2 "	R424244X	R424244X[37]	60050266	69270757[41]	R4111993[302]	R4122386	-	-
23-123486-002[268]	2-1/2 "	R424244X	R424244X[37]	60050266	69270757[41]	R4112066[306]	R4110406	N/A	N/A
23-122729-002[266]	2-7/8 "	R429218X	R429218X[39]	R406532	R4090070[40]	-	-	R4577482	R4577482
23-122729-002[266]	2-7/8 "	R429218X	R429218X[39]	R406532	R4090070[40]	-	-	R4577482	R4577482
23-123468-002[288]	2-7/8 "	R429218X	R429218X[39]	R406532	R4090070[40]	-	-	-	-
R44141583[287]	2-7/8 "	R429218X	R429218X[39]	R406532	R4090070[40]	-	-	-	-
23-122729-002[266]	2-7/8 "	R429218X	R429218X[39]	R406532	R4090070[40]	-	-	R4577482	R4577482
23-122729-002[266]	2-7/8 "	R429218X	R429218X[39]	R406532	R4090070[40]	-	-	R4577482	R4577482
23-123486-002[268]	2-7/8 "	R429218X	R429218X[39]	R406532	R4090070[40]	-	-	-	-
N/A[286]	2-7/8 "	R429218X	R429218X[39]	R406532	R4090070[40]	-	-	-	-
-	2-7/8 "	R429218X	R429218X[39]	R406532	R4090070[40]	-	-	-	-
23-122729-002[266]	2-7/8 "	R429218X	R429218X[39]	R406532	R4090070[40]	-	-	-	-
23-123486-002[268]	2-1/2 "	R424244X	R424244X[37]	60050266	69270757[41]	-	-	-	-
23-122729-002[266]	2-7/8 "	R429218X	R429218X[39]	R406532	R4090070[40]	-	-	R4577482	R4577482
23-123486-002[268]	2-1/2 "	R424244X	R424244X[37]	60050266	69270757[41]	R4112066[306]	R4110406	N/A	N/A
23-123486-002[268]	2-1/2 "	R424244X	R424244X[37]	60050266	69270757[41]	R4112066[306]	R4110406	N/A	N/A
23-122729-002[266]	2-7/8 "	R429218X	R429218X[39]	R406532	R4090070[40]	-	-	R4577482	R4577482
23-122729-002[266]	2-7/8 "	R429218X	R429218X[39]	R406532	R4090070[40]	-	-	R4577482	R4577482
23-123468-002[288]	2-7/8 "	R429218X	R429218X[39]	R406532	R4090070[40]	-	-	-	-
R44141583[287]	2-7/8 "	R429218X	R429218X[39]	R406532	R4090070[40]	-	-	-	-
23-122729-002[266]	2-7/8 "	R429218X	R429218X[39]	R406532	R4090070[40]	-	-	R4577482	R4577482
23-122729-002[266]	2-7/8 "	R429218X	R429218X[39]	R406532	R4090070[40]	-	-	R4577482	R4577482
N/A[286]	2-7/8 "	R429218X	R429218X[39]	R406532	R4090070[40]	-	-	-	-
23-123486-002[268]	2-7/8 "	R429218X	R429218X[39]	R406532	R4090070[40]	-	-	-	-
23-122729-002[266]	2-7/8 "	R429218X	R429218X[39]	R406532	R4090070[40]	-	-	-	-
-	2-7/8 "	R429218X	R429218X[39]	R406532	R4090070[40]	-	-	-	-
N/A	1-7/8 "	R4133420	R4133420	R4166897	NR	-	-	R4577482	R4577482
N/A	1-7/8 "	R4133420	R4133420	R4166897	NR	-	-	R4577482	R4577482
N/A	1-5/8 "	R4133338	R4133338	R4166689	NR	-	-	R4577482	R4577482
N/A	1-7/8 "	R4133420	R4133420	R4166897	NR	-	-	R4577482	R4577482
N/A	1-7/8 "	R4133420	R4133420	R4166897	NR	-	-	R4577482	R4577482
N/A	1-7/8 "	R4133420	R4133420	R4166897	NR	-	-	R4577482	R4577482
N/A	1-7/8 "	R4133420	R4133420	R4166897	NR	-	-	R4577482	R4577482
N/A	1-5/8 "	R4133338	R4133338	R4166689	NR	-	-	R4577482	R4577482
N/A	1-5/8 "	R4133338	R4133338	R4166689	NR	-	-	R4577482	R4577482
N/A	1-1/8 "	R4133320	R4133321	R4166926	NR	R4112066[306]	R4110406	N/A	N/A
N/A	1-1/8 "	R4133320	R4133321	R4166926	NR	R4112066[306]	R4110406	N/A	N/A
N/A	1-1/4 "	R4133376	R4133377	R4166923	NR	R4112066[306]	R4110406	N/A	N/A
N/A	1-1/4 "	R4133376	R4133377	R4166923	NR	R4112066[306]	R4110406	N/A	N/A
N/A	1-5/8 "	R4133338	R4133338	R4166689	NR	-	-	R4577482	R4577482
N/A	1-5/8 "	R4133338	R4133338	R4166689	NR	-	-	R4577482	R4577482

287 - Budd rotor with 6 studs
288 - Dayton Rotor with 6 Studs
302 - Power Brakes, Dual System
306 - Power Brakes, Single System
339 - Use 69160441 for Disc Pad Retainer Clip

MAKE MODEL YEAR AXLE CODE AXLE WEIGHT	AXLE & BRK. TYPE	BRK. MFG.	BRAKE SIZE	FMSI	MERITOR DISC PAD OR BRAKE SHOE	MERITOR GUIDE PIN OR RETURN SPRING KIT	MERITOR CALIPER HWD. KIT OR RETURN SPRING KIT	MERITOR ADJUSTER KIT (LEFT WHEEL)	MERITOR ADJUSTER KIT (RIGHT WHEEL)
GMC / CHEV(Cont.)									
70, 7000 SERIES(Cont.)									
1982									
	Rm	WG	15 " x 6 "	4596 - 380	R700381	R40H597	R40H9200	R40H3518	R404148
	Rm	WG	15 " x 6 "	4596 - 380	R700381	R40H597	R40H9200	R40H3518	R404148
C7D042, C7D064 Conventional T170, 185, 17100, 17200	Ra	WG	15 " x 7 "	4597 - 383	R700383	R40H597	R40H9200	R40H3540	R40H3541
	Ra	WG	15 " x 7 "	4597 - 383	R700383	R40H597	R40H9200	R40H3540	R40H3541
	Rm	WG	15 " x 7 "	4597 - 382	R700383	R40H597	R40H9200	R40H3518	R404148
	Rm	WG	15 " x 7 "	4597 - 382	R700383	R40H597	R40H9200	R40H3518	R404148
	Rm	WG	15 " x 7 "	4597 - 382	R700383	R40H597	R40H9200	R40H3518	R404148
F070	Fa	WG	15 " x 3 "	1245C - 321	R700321	R40H521	R40H9237	R40H3502	R40H3503
	Fm	WG	15 " x 3 "	1245A - 235	R700235	R40H521	R40H9201	R404132	R404132[279]
F090, F120	Fa	WG	15 " x 3-1/2 "	1280B - 322	R464004	R40H521	R40H9237	R40H3502	R40H3503
	Fm	WG	15 " x 3-1/2 "	1280 - 463	R700463	R40H521	R40H9201	R404132	R404132[279]
H170, 172, 175, T170, 16244	Ra	WG	15 " x 6 "	4596 - 381	R700381	R40H597	R40H9200	R40H3540	R40H3541
H170, 175, T170, 175	Rm	WG	15 " x 6 "	4596 - 380	R700381	R40H597	R40H9200	R40H3518	R404148
T170, 185, 17100, 17202	Ra	WG	15 " x 7 "	4597 - 383	R700383	R40H597	R40H9200	R40H3540	R40H3541
1981 C7D042, C7D064 Conventional 18121, 18221, 22121, 22221	Ra	WG	16 " x 6 "	1255 - 386	N/A	R40H597	R40H9200	-	-
	Ra	WG	16 " x 6 "	1255 - 386	N/A	R40H597	R40H9200	-	-
	Rm	WG	16 " x 6 "	1255 - 386	N/A	R40H597	R40H9200	R404149	R404150
	Rm	WG	16 " x 6 "	1255 - 386	N/A	R40H597	R40H9200	R404149	R404150
C7D042, C7D064 Conventional 34DS, 34DT	TRm	WG	15 " x 6 "	4596 - 381	R700381	R40H597	R40H9200	R40H3518	R404148
	TRm	WG	15 " x 6 "	4596 - 381	R700381	R40H597	R40H9200	R40H3518	R404148
C7D042, C7D064 Conventional F070	Fa	WG	15 " x 3 "	1245C - 321	R700321	R40H521	R40H9237	R40H3502	R40H3503
	Fm	WG	15 " x 3 "	1245A - 235	R700235	R40H521	R40H9201	R404132	R404132[279]
C7D042, C7D064 Conventional F090, F120	Fa	WG	15 " x 3-1/2 "	1280B - 322	R464004	R40H521	R40H9237	R40H3502	R40H3503
	Fm	WG	15 " x 3-1/2 "	1280 - 463	R700463	R40H521	R40H9201	R404132	R404132[279]
C7D042, C7D064 Conventional H170, 175, T170, 175	Ra	WG	15 " x 6 "	4596 - 381	R700381	R40H597	R40H9200	R40H3540	R40H3541
	Ra	WG	15 " x 6 "	4596 - 381	R700381	R40H597	R40H9200	R40H3540	R40H3541
	Rm	WG	15 " x 6 "	4596 - 380	R700381	R40H597	R40H9200	R40H3518	R404148
	Rm	WG	15 " x 6 "	4596 - 380	R700381	R40H597	R40H9200	R40H3518	R404148
C7D042, C7D064 Conventional T170, 185, 17100, 17200	Ra	WG	15 " x 7 "	4597 - 383	R700383	R40H597	R40H9200	R40H3540	R40H3541
	Ra	WG	15 " x 7 "	4597 - 383	R700383	R40H597	R40H9200	R40H3540	R40H3541
	Rm	WG	15 " x 7 "	4597 - 382	R700383	R40H597	R40H9200	R40H3518	R404148
	Rm	WG	15 " x 7 "	4597 - 382	R700383	R40H597	R40H9200	R40H3518	R404148
1980 C7D042, C7D064 Conventional 18121, 18221, 22121, 22221	Ra	WG	16 " x 6 "	1255 - 386	N/A	R40H597	R40H9200	-	-
	Ra	WG	16 " x 6 "	1255 - 386	N/A	R40H597	R40H9200	-	-
	Rm	WG	16 " x 6 "	1255 - 386	N/A	R40H597	R40H9200	R404149	R404150
	Rm	WG	16 " x 6 "	1255 - 386	N/A	R40H597	R40H9200	R404149	R404150
C7D042, C7D064 Conventional 34DS, 34DT	TRm	WG	15 " x 6 "	4596 - 381	R700381	R40H597	R40H9200	R40H3518	R404148
	TRm	WG	15 " x 6 "	4596 - 381	R700381	R40H597	R40H9200	R40H3518	R404148
C7D042, C7D064 Conventional F070	Fa	WG	15 " x 3 "	1245C - 321	R700321	R40H521	R40H9237	R40H3502	R40H3503

279 - Has 2.29" Adjuster Studs, For 2.60" Studs Use E-4133 306 - Power Brakes, Single System

MERITOR DRUM OR ROTOR NO.	CALIPER OR CYLINDER BORE SIZE	MERITOR CALIPER OR WHEEL CYLINDER (LEFT)	MERITOR CALIPER OR WHEEL CYLINDER (RIGHT)	MERITOR CALIPER OR WHEEL CYLINDER REPAIR KIT	MERITOR CALIPER PISTON	MERITOR MASTER CYLINDER	MERITOR MASTER CYLINDER KIT	MERITOR BRAKE HOSE (LEFT)	MERITOR BRAKE HOSE (RIGHT)
									GMC / CHEV(Cont.)
									70, 7000 SERIES(Cont.)
N/A	1-5/8 "	R4133338	R4133338	R4166689	NR	-	-	R4577482	R4577482
N/A	1-5/8 "	R4133338	R4133338	R4166689	NR	-	-	R4577482	R4577482
N/A	1-3/4 "	R4133400	R4133400	R4166917	NR	-	-	R4577482	R4577482
N/A	1-3/4 "	R4133400	R4133400	R4166917	NR	-	-	R4577482	R4577482
N/A	1-3/4 "	R4133400	R4133400	R4166917	NR	-	-	R4577482	R4577482
N/A	1-3/4 "	R4133400	R4133400	R4166917	NR	-	-	R4577482	R4577482
N/A	1-3/4 "	R4133400	R4133400	R4166917	NR	-	-	R4577482	R4577482
N/A	1-1/8 "	R4133320	R4133321	R4166926	NR	-	-	-	-
N/A	1-1/8 "	R4133320	R4133321	R4166926	NR	-	-	-	-
N/A	1-1/4 "	R4133376	R4133377	R4166923	NR	-	-	-	-
N/A	1-1/4 "	R4133376	R4133377	R4166923	NR	-	-	-	-
N/A	1-5/8 "	R4133338	R4133338	R4166689	NR	-	-	R4577482	R4577482
N/A	1-5/8 "	R4133338	R4133338	R4166689	NR	-	-	R4577482	R4577482
N/A	1-3/4 "	R4133400	R4133400	R4166917	NR	-	-	R4577482	R4577482
N/A	1-7/8 "	R4133420	R4133420	R4166897	NR	-	-	R4577482	R4577482
N/A	1-7/8 "	R4133420	R4133420	R4166897	NR	-	-	R4577482	R4577482
N/A	1-7/8 "	R4133420	R4133420	R4166897	NR	-	-	R4577482	R4577482
N/A	1-7/8 "	R4133420	R4133420	R4166897	NR	-	-	R4577482	R4577482
N/A	1-5/8 "	R4133338	R4133338	R4166689	NR	-	-	R4577482	R4577482
N/A	1-5/8 "	R4133338	R4133338	R4166689	NR	-	-	R4577482	R4577482
N/A	1-1/8 "	R4133320	R4133321	R4166926	NR	R4112066[306]	R4110406	N/A	N/A
N/A	1-1/8 "	R4133320	R4133321	R4166926	NR	R4112066[306]	R4110406	N/A	N/A
N/A	1-1/4 "	R4133376	R4133377	R4166923	NR	R4112066[306]	R4110406	N/A	N/A
N/A	1-1/4 "	R4133376	R4133377	R4166923	NR	R4112066[306]	R4110406	N/A	N/A
N/A	1-5/8 "	R4133338	R4133338	R4166689	NR	-	-	R4577482	R4577482
N/A	1-5/8 "	R4133338	R4133338	R4166689	NR	-	-	R4577482	R4577482
N/A	1-5/8 "	R4133338	R4133338	R4166689	NR	-	-	R4577482	R4577482
N/A	1-5/8 "	R4133338	R4133338	R4166689	NR	-	-	R4577482	R4577482
N/A	1-3/4 "	R4133400	R4133400	R4166917	NR	-	-	R4577482	R4577482
N/A	1-3/4 "	R4133400	R4133400	R4166917	NR	-	-	R4577482	R4577482
N/A	1-3/4 "	R4133400	R4133400	R4166917	NR	-	-	R4577482	R4577482
N/A	1-3/4 "	R4133400	R4133400	R4166917	NR	-	-	R4577482	R4577482
N/A	1-7/8 "	R4133420	R4133420	R4166897	NR	-	-	R4577482	R4577482
N/A	1-7/8 "	R4133420	R4133420	R4166897	NR	-	-	R4577482	R4577482
N/A	1-7/8 "	R4133420	R4133420	R4166897	NR	-	-	R4577482	R4577482
N/A	1-7/8 "	R4133420	R4133420	R4166897	NR	-	-	R4577482	R4577482
N/A	1-5/8 "	R4133338	R4133338	R4166689	NR	-	-	R4577482	R4577482
N/A	1-5/8 "	R4133338	R4133338	R4166689	NR	-	-	R4577482	R4577482
N/A	1-1/8 "	R4133320	R4133321	R4166926	NR	R4112066[306]	R4110406	N/A	N/A

MAKE MODEL YEAR AXLE CODE AXLE WEIGHT	AXLE & BRK. TYPE	BRK. MFG.	BRAKE SIZE	FMSI	MERITOR DISC PAD OR BRAKE SHOE	MERITOR GUIDE PIN OR RETURN SPRING KIT	MERITOR CALIPER HWD. KIT OR RETURN SPRING KIT	MERITOR ADJUSTER KIT (LEFT WHEEL)	MERITOR ADJUSTER KIT (RIGHT WHEEL)
GMC / CHEV(Cont.)									
70, 7000 SERIES(Cont.)									
1980									
	Fm	WG	15 " x 3 "	1245A - 235	R700235	R40H521	R40H9201	R404132	R404132[279]
C7D042, C7D064 Conventional									
F090, F120	Fa	WG	15 " x 3-1/2 "	1280B - 322	R464004	R40H521	R40H9237	R40H3502	R40H3503
	Fm	WG	15 " x 3-1/2 "	1280 - 463	R700463	R40H521	R40H9201	R404132	R404132[279]
C7D042, C7D064 Conventional									
H170, 175, T170, 175	Ra	WG	15 " x 6 "	4596 - 381	R700381	R40H597	R40H9200	R40H3540	R40H3541
	Ra	WG	15 " x 6 "	4596 - 381	R700381	R40H597	R40H9200	R40H3540	R40H3541
	Rm	WG	15 " x 6 "	4596 - 380	R700381	R40H597	R40H9200	R40H3518	R404148
	Rm	WG	15 " x 6 "	4596 - 380	R700381	R40H597	R40H9200	R40H3518	R404148
C7D042, C7D064 Conventional									
T170, 185, 17100, 17200	Ra	WG	15 " x 7 "	4597 - 383	R700383	R40H597	R40H9200	R40H3540	R40H3541
	Ra	WG	15 " x 7 "	4597 - 383	R700383	R40H597	R40H9200	R40H3540	R40H3541
	Rm	WG	15 " x 7 "	4597 - 382	R700383	R40H597	R40H9200	R40H3518	R404148
	Rm	WG	15 " x 7 "	4597 - 382	R700383	R40H597	R40H9200	R40H3518	R404148
1979 C7D042, C7D064 Conventional 18121, 18221, 22121, 22221	Ra	WG	16 " x 6 "	1255 - 386	N/A	R40H597	R40H9200	-	-
	Ra	WG	16 " x 6 "	1255 - 386	N/A	R40H597	R40H9200	-	-
	Rm	WG	16 " x 6 "	1255 - 386	N/A	R40H597	R40H9200	R404149	R404150
	Rm	WG	16 " x 6 "	1255 - 386	N/A	R40H597	R40H9200	R404149	R404150
C7D042, C7D064 Conventional									
34DS, 34DT	TRm	WG	15 " x 6 "	4596 - 381	R700381	R40H597	R40H9200	R40H3518	R404148
	TRm	WG	15 " x 6 "	4596 - 381	R700381	R40H597	R40H9200	R40H3518	R404148
C7D042, C7D064 Conventional									
F070	Fa	WG	15 " x 3 "	1245C - 321	R700321	R40H521	R40H9237	R40H3502	R40H3503
	Fm	WG	15 " x 3 "	1245A - 235	R700235	R40H521	R40H9201	R404132	R404132[279]
C7D042, C7D064 Conventional									
F090, F120	Fa	WG	15 " x 3-1/2 "	1280B - 322	R464004	R40H521	R40H9237	R40H3502	R40H3503
	Fm	WG	15 " x 3-1/2 "	1280 - 463	R700463	R40H521	R40H9201	R404132	R404132[279]
C7D042, C7D064 Conventional									
H170, 175, T170, 175	Ra	WG	15 " x 6 "	4596 - 381	R700381	R40H597	R40H9200	R40H3540	R40H3541
	Ra	WG	15 " x 6 "	4596 - 381	R700381	R40H597	R40H9200	R40H3540	R40H3541
	Rm	WG	15 " x 6 "	4596 - 380	R700381	R40H597	R40H9200	R40H3518	R404148
	Rm	WG	15 " x 6 "	4596 - 380	R700381	R40H597	R40H9200	R40H3518	R404148
C7D042, C7D064 Conventional									
T170, 185, 17100, 17200	Ra	WG	15 " x 7 "	4597 - 383	R700383	R40H597	R40H9200	R40H3540	R40H3541
	Ra	WG	15 " x 7 "	4597 - 383	R700383	R40H597	R40H9200	R40H3540	R40H3541
	Rm	WG	15 " x 7 "	4597 - 382	R700383	R40H597	R40H9200	R40H3518	R404148
	Rm	WG	15 " x 7 "	4597 - 382	R700383	R40H597	R40H9200	R40H3518	R404148
C-3500 SERIES- 1 TON - CONVENTIONAL CAB, PICKUP AND SUBURBAN									
1999									
4x2	Ra	GM	11.1563 x 2-3/4 "	2073TT - 473	R46473	R40H369	R40H4072DP[278]	R40H2586	R40H2587
	Ra	GM	13 " x 2-1/2 "	2042AT - 451	R46451	R40H378	R40H7055	R40H2588	R40H2589
	Ra	GM	13 " x 2-1/2 "	2042AT - 451	R46451	R40H378	R40H7055	R40H2588	R40H2589
	Ra	GM	13 " x 2-1/2 "	2042AT - 451	R46451	R40H378	R40H7055	R40H2588	R40H2589
4x2									
7,200 lb. GVW	Fd	GM		7259 - D369	MD369	R40H5083	R40H5707	NR	NR
	Fd	GM		7259 - D369	MD369	R40H5083	R40H5707	NR	NR
4x2									
8,600 lb. GVW	Fd	GM		7260 - D370	MD370	R40H5083	R40H5707	NR	NR
	Fd	GM		7260 - D370	MD370	R40H5083	R40H5707	NR	NR
1995									
Heavy Duty									
15,000 lb. GVW	Fd	GM		7081 - D149	MD149	R40H5010	R40H5529	NR	NR

278 - For Heavy Duty version use E-11287

279 - Has 2.29" Adjuster Studs, For 2.60" Studs Use E-4133

282 - 10 1/2" Ring Gear, First Design; Use 3 3/8" Outside Diameter Axle Tubes

291 - Except 9 1/2" Ring Gear

293 - With 9 1/2" Ring Gear and 6 3/8" Drum Width

306 - Power Brakes, Single System

332 - Power Brakes, Hydraulic Booster

334 - Power Brakes, Vacuum Booster

390 - Rotor and Hub One Piece Assembly With ABS Ring

MERITOR DRUM OR ROTOR NO.	CALIPER OR CYLINDER BORE SIZE	MERITOR CALIPER OR WHEEL CYLINDER (LEFT)	MERITOR CALIPER OR WHEEL CYLINDER (RIGHT)	MERITOR CALIPER OR WHEEL CYLINDER REPAIR KIT	MERITOR CALIPER PISTON	MERITOR MASTER CYLINDER	MERITOR MASTER CYLINDER KIT	MERITOR BRAKE HOSE (LEFT)	MERITOR BRAKE HOSE (RIGHT)
GMC / CHEV(Cont.)									
70, 7000 SERIES(Cont.)									
N/A	1-1/8 "	R4133320	R4133321	R4166926	NR	R4112066[306]	R4110406	N/A	N/A
N/A	1-1/4 "	R4133376	R4133377	R4166923	NR	R4112066[306]	R4110406	N/A	N/A
N/A	1-1/4 "	R4133376	R4133377	R4166923	NR	R4112066[306]	R4110406	N/A	N/A
N/A	1-5/8 "	R4133338	R4133338	R4166689	NR	-	-	R4577482	R4577482
N/A	1-5/8 "	R4133338	R4133338	R4166689	NR	-	-	R4577482	R4577482
N/A	1-5/8 "	R4133338	R4133338	R4166689	NR	-	-	R4577482	R4577482
N/A	1-5/8 "	R4133338	R4133338	R4166689	NR	-	-	R4577482	R4577482
N/A	1-3/4 "	R4133400	R4133400	R4166917	NR	-	-	R4577482	R4577482
N/A	1-3/4 "	R4133400	R4133400	R4166917	NR	-	-	R4577482	R4577482
N/A	1-3/4 "	R4133400	R4133400	R4166917	NR	-	-	R4577482	R4577482
N/A	1-3/4 "	R4133400	R4133400	R4166917	NR	-	-	R4577482	R4577482
N/A	1-7/8 "	R4133420	R4133420	R4166897	NR	-	-	R4577482	R4577482
N/A	1-7/8 "	R4133420	R4133420	R4166897	NR	-	-	R4577482	R4577482
N/A	1-7/8 "	R4133420	R4133420	R4166897	NR	-	-	R4577482	R4577482
N/A	1-7/8 "	R4133420	R4133420	R4166897	NR	-	-	R4577482	R4577482
N/A	1-5/8 "	R4133338	R4133338	R4166689	NR	-	-	R4577482	R4577482
N/A	1-5/8 "	R4133338	R4133338	R4166689	NR	-	-	R4577482	R4577482
N/A	1-1/8 "	R4133320	R4133321	R4166926	NR	R4112066[306]	R4110406	N/A	N/A
N/A	1-1/8 "	R4133320	R4133321	R4166926	NR	R4112066[306]	R4110406	N/A	N/A
N/A	1-1/4 "	R4133376	R4133377	R4166923	NR	R4112066[306]	R4110406	N/A	N/A
N/A	1-1/4 "	R4133376	R4133377	R4166923	NR	R4112066[306]	R4110406	N/A	N/A
N/A	1-5/8 "	R4133338	R4133338	R4166689	NR	-	-	R4577482	R4577482
N/A	1-5/8 "	R4133338	R4133338	R4166689	NR	-	-	R4577482	R4577482
N/A	1-5/8 "	R4133338	R4133338	R4166689	NR	-	-	R4577482	R4577482
N/A	1-5/8 "	R4133338	R4133338	R4166689	NR	-	-	R4577482	R4577482
N/A	1-3/4 "	R4133400	R4133400	R4166917	NR	-	-	R4577482	R4577482
N/A	1-3/4 "	R4133400	R4133400	R4166917	NR	-	-	R4577482	R4577482
N/A	1-3/4 "	R4133400	R4133400	R4166917	NR	-	-	R4577482	R4577482
N/A	1-3/4 "	R4133400	R4133400	R4166917	NR	-	-	R4577482	R4577482
C-3500 SERIES- 1 TON - CONVENTIONAL CAB, PICKUP AND SUBURBAN									
R44140543[291]	1 "	R4134037	R4134037	R4166620	NR	-	-	-	-
R44140449[293]	1-1/16 "	R4133709	R4133709	N/A	NR	-	-	-	-
R44140363[282]	1-1/16 "	R4133709	R4133709	N/A	NR	-	-	-	-
R44140682	1-1/16 "	R4133709	R4133709	N/A	NR	-	-	-	-
R44145107	2-15/16 "	R42R55501	R42R55500	R4066306	R4090087S	R4110372[334]	R4122202	-	-
R44145107	2-15/16 "	R42R55501	R42R55500	R4066306	R4090087S	R4113056[332]	N/A	-	-
R44141818[390]	3-5/32 "	R42R55497	R42R55496	R4066330	R4090101S	R4110372[334]	R4122202	-	-
R44141818[390]	3-5/32 "	R42R55497	R42R55496	R4066330	R4090101S	R4113056[332]	N/A	-	-
R4411316[405]	3-3/8 "	R42R55199	R42R55200	R4066780	R4090021	R4110376	N/A	-	-

405 - Rotor Only

MAKE MODEL YEAR AXLE CODE AXLE WEIGHT	AXLE & BRK. TYPE	BRK. MFG.	BRAKE SIZE	FMSI	MERITOR DISC PAD OR BRAKE SHOE	MERITOR GUIDE PIN OR RETURN SPRING KIT	MERITOR CALIPER HWD. KIT OR RETURN SPRING KIT	MERITOR ADJUSTER KIT (LEFT WHEEL)	MERITOR ADJUSTER KIT (RIGHT WHEEL)
GMC / CHEV(Cont.)									
C-3500 SERIES- 1 TON - CONVENTIONAL CAB, PICKUP AND SUBURBAN(Cont.)									
1995	Rd	GM		7081 - D149	MD149	R40H5010	R40H5529	NR	NR
1994	Ra	GM	13 " x 3-1/2 "	2157T - S656	R46452	R40H378	R40H7055	R40H2588	R40H2589
Dual Rear Wheels	Rd	BX		7081 - D149	MD149	R40H5010	R40H5529	NR	NR
	Rd	BX		7081 - D149	MD149	R40H5010	R40H5529	NR	NR
Single Rear Wheels	Ra	GM	13 " x 2-1/2 "	2042T - S655	R46451	R40H378	R40H7055	R40H2588	R40H2589
	Ra	GM	13 " x 2-1/2 "	2042T - S655	R46451	R40H378	R40H7055	R40H2588	R40H2589
	Ra	GM	13 " x 3-1/2 "	2157T - S656	R46452	R40H378	R40H7055	R40H2588	R40H2589
Single Rear Wheels 9,000, 9,200 lb. GVW	Fd	GM		7260 - D370	MD370	R40H5083	R40H5707	NR	NR
	Fd	GM		7260 - D370	MD370	R40H5083	R40H5707	NR	NR
Dual Rear Wheels 10,000, 11,000, 12,000lb. GVW	Ra	GM	13 " x 3-1/2 "	2157T - S656	R46452	R40H378	R40H7055	R40H2588	R40H2589
	Ra	GM	13 " x 3-1/2 "	2157T - S656	R46452	R40H378	R40H7055	R40H2588	R40H2589
Dual Rear Wheels 10,000, 11,000lb. GVW	Fd	GM		7339 - D459	MD459	R40H5083	R40H5788	NR	NR
	Fd	GM		7339 - D459	MD459	R40H5083	R40H5788	NR	NR
Dual Rear Wheels 15,000 lb. GVW	Fd	BX		7081 - D149	MD149	R40H5010	R40H5529	NR	NR
	Fd	BX		7081 - D149	MD149	R40H5010	R40H5529	NR	NR
Rear Disc Brakes, Heavy Duty 15,000 lb. GVW	Fd			7108 - D184	MD184	R40H5010	R40H5519	NR	NR
Wrecker with Rear Disc Brakes, Heavy Duty 15,000 lb. GVW	Rd			7108 - D184	MD184	R40H5010	R40H5519	NR	NR
1993	Ra	GM	13 " x 3-1/2 "	2157T - S656	R46452	R40H378	R40H7055	R40H2588	R40H2589
Dual Rear Wheels	Rd	BX		7081 - D149	MD149	R40H5010	R40H5529	NR	NR
	Rd	BX		7081 - D149	MD149	R40H5010	R40H5529	NR	NR
Single Rear Wheels	Ra	GM	13 " x 2-1/2 "	2042T - S655	R46451	R40H378	R40H7055	R40H2588	R40H2589
	Ra	GM	13 " x 2-1/2 "	2042T - S655	R46451	R40H378	R40H7055	R40H2588	R40H2589
	Ra	GM	13 " x 3-1/2 "	2157T - S656	R46452	R40H378	R40H7055	R40H2588	R40H2589
Single Rear Wheels 9,000, 9,200 lb. GVW	Fd	GM		7260 - D370	MD370	R40H5083	R40H5707	NR	NR
	Fd	GM		7260 - D370	MD370	R40H5083	R40H5707	NR	NR
Dual Rear Wheels 10,000, 11,000, 12,000lb. GVW	Ra	GM	13 " x 3-1/2 "	2157T - S656	R46452	R40H378	R40H7055	R40H2588	R40H2589
	Ra	GM	13 " x 3-1/2 "	2157T - S656	R46452	R40H378	R40H7055	R40H2588	R40H2589
Dual Rear Wheels 10,000, 11,000lb. GVW	Fd	GM		7339 - D459	MD459	R40H5083	R40H5788	NR	NR
	Fd	GM		7339 - D459	MD459	R40H5083	R40H5788	NR	NR
Dual Rear Wheels 15,000 lb. GVW	Fd	BX		7081 - D149	MD149	R40H5010	R40H5529	NR	NR
	Fd	BX		7081 - D149	MD149	R40H5010	R40H5529	NR	NR
1992	Ra	GM	13 " x 3-1/2 "	2157T - S656	R46452	R40H378	R40H7055	R40H2588	R40H2589
Dual Rear Wheels Except Heavy Duty	Fd	GM		7339 - D459	MD459	R40H5083	R40H5788	NR	NR
	Ra	GM	13 " x 3-1/2 "	2157T - S656	R46452	R40H378	R40H7055	R40H2588	R40H2589
Dual Rear Wheels with Heavy Duty	Fd	BX		7081 - D149	MD149	R40H5010	R40H5529	NR	NR
	Fd	BX		7081 - D149	MD149	R40H5010	R40H5529	NR	NR
	Rd	BX		7081 - D149	MD149	R40H5010	R40H5529	NR	NR
Pickup	Fd	GM		7260 - D370	MD370	R40H5083	R40H5707	NR	NR
	Fd	GM		7260 - D370	MD370	R40H5083	R40H5707	NR	NR
Pickup with Dual Rear Wheels Except Heavy Duty	Fd	GM		7339 - D459	MD459	R40H5083	R40H5788	NR	NR
	Ra	GM	13 " x 3-1/2 "	2157T - S656	R46452	R40H378	R40H7055	R40H2588	R40H2589
Pickup with Dual Wheels and H.D. Chassis	Rd	BX		7081 - D149	MD149	R40H5010	R40H5529	NR	NR

32 - For rotor only use R44141480
67 - 183.5" Wheel Base
280 - 10 1/2" Ring Gear
282 - 10 1/2" Ring Gear, First Design; Use 3 3/8" Outside Diameter Axle Tubes
346 - 4500 lb. Casting Number 2238451452, 10mm Inlet
381 - Rotor and Hub One Piece Assembly W/O ABS Ring
390 - Rotor and Hub One Piece Assembly With ABS Ring
405 - Rotor Only

MERITOR DRUM OR ROTOR NO.	CALIPER OR CYLINDER BORE SIZE	MERITOR CALIPER OR WHEEL CYLINDER (LEFT)	MERITOR CALIPER OR WHEEL CYLINDER (RIGHT)	MERITOR CALIPER OR WHEEL CYLINDER REPAIR KIT	MERITOR CALIPER PISTON	MERITOR MASTER CYLINDER	MERITOR MASTER CYLINDER KIT	MERITOR BRAKE HOSE (LEFT)	MERITOR BRAKE HOSE (RIGHT)
GMC / CHEV(Cont.)									
C-3500 SERIES- 1 TON - CONVENTIONAL CAB, PICKUP AND SUBURBAN(Cont.)									
R44145028[405]	3-3/8 "	R42R55199	R42R55200	R4066780	R4090021	-	-	-	-
R44140619	1-1/16 "	R4133709	R4133709	N/A	NR	-	-	-	-
R44141483[405]	3-3/8 "	R42R55200	R42R55199	R4066780	R4090021	-	-	-	-
R44141483[405]	3-3/8 "	R42R55200	R42R55199	R4066780	R4090021	-	-	-	-
R44140363[282]	1-1/16 "	R4133709	R4133709	N/A	NR	-	-	-	-
R44140363[282]	1-1/16 "	R4133709	R4133709	N/A	NR	-	-	-	-
R44140619	1-1/16 "	R4133709	R4133709	N/A	NR	-	-	-	-
R44141540[381]	3-5/32 "	R42R55497	R42R55496	R4066330	R4090101S	-	-	-	-
R44141540[381]	3-5/32 "	R42R55497	R42R55496	R4066330	R4090101S	-	-	-	-
R44140388[280]	1-3/16 "	R4133708	R4133708	R4166872	NR	-	-	-	-
R44140388[280]	1-3/16 "	R4133708	R4133708	R4166872	NR	-	-	-	-
R44141866[381]	3-25/32 "	R42R55687	R42R55688	R4066211	R4090188S	-	-	-	-
R44141866[381]	3-25/32 "	R42R55687	R42R55688	R4066211	R4090188S	-	-	-	-
R44141866[381]	3-3/8 "	R42R55200	R42R55199[346]	R4066780	R4090021	-	-	-	-
R44141866[381]	3-3/8 "	R42R55200	R42R55199[346]	R4066780	R4090021	-	-	-	-
R4411316[67]		-	-	-	-	-	-	-	-
R44145028[405]		-	-	-	-	-	-	-	-
R44140619	1-1/16 "	R4133709	R4133709	N/A	NR	-	-	-	-
R44141483[405]	3-3/8 "	R42R55200	R42R55199	R4066780	R4090021	-	-	-	-
R44141483[405]	3-3/8 "	R42R55200	R42R55199	R4066780	R4090021	-	-	-	-
R44140363[282]	1-1/16 "	R4133709	R4133709	N/A	NR	-	-	-	-
R44140363[282]	1-1/16 "	R4133709	R4133709	N/A	NR	-	-	-	-
R44140619	1-1/16 "	R4133709	R4133709	N/A	NR	-	-	-	-
R44141818[390]	3-5/32 "	R42R55497	R42R55496	R4066330	R4090101S	-	-	-	-
R44141818[390]	3-5/32 "	R42R55497	R42R55496	R4066330	R4090101S	-	-	-	-
R44140388[280]	1-3/16 "	R4133708	R4133708	R4166872	NR	-	-	-	-
R44140388[280]	1-3/16 "	R4133708	R4133708	R4166872	NR	-	-	-	-
R44141866[381]	3-25/32 "	R42R55687	R42R55688	R4066211	R4090188S	-	-	-	-
R44141866[381]	3-25/32 "	R42R55687	R42R55688	R4066211	R4090188S	-	-	-	-
R44141480[32]	3-3/8 "	R42R55200	R42R55199[346]	R4066780	R4090021	-	-	-	-
R44141480[32]	3-3/8 "	R42R55200	R42R55199[346]	R4066780	R4090021	-	-	-	-
R44140619	1-1/16 "	R4133709	R4133709	N/A	NR	-	-	-	-
R44141866[405]	3-25/32 "	R42R55687	R42R55688	R4066211	R4090188S	-	-	-	-
N/A	1-3/16 "	R4133708	R4133708	R4166872	NR	-	-	-	-
R44141480[405]	3-3/8 "	R42R55200	R42R55199[346]	R4066780	R4090021	-	-	-	-
R44141480[405]	3-3/8 "	R42R55200	R42R55199[346]	R4066780	R4090021	-	-	-	-
R44141483[405]	3-3/8 "	R42R55200	R42R55199	R4066780	R4090021	-	-	-	-
R44141540[381]	3-5/32 "	R42R55497	R42R55496	R4066330	R4090101S	-	-	-	-
R44141540[381]	3-5/32 "	R42R55497	R42R55496	R4066330	R4090101S	-	-	-	-
R44141866[405]	3-25/32 "	R42R55687	R42R55688	R4066211	R4090188S	-	-	-	-
N/A	1-3/16 "	R4133708	R4133708	R4166872	NR	-	-	-	-
R44141483[405]	3-3/8 "	R42R55200	R42R55199	R4066780	R4090021	-	-	-	-

MAKE MODEL YEAR AXLE CODE AXLE WEIGHT	AXLE & BRK. TYPE	BRK. MFG.	BRAKE SIZE	FMSI	MERITOR DISC PAD OR BRAKE SHOE	MERITOR GUIDE PIN OR RETURN SPRING KIT	MERITOR CALIPER HWD. KIT OR RETURN SPRING KIT	MERITOR ADJUSTER KIT (LEFT WHEEL)	MERITOR ADJUSTER KIT (RIGHT WHEEL)
GMC / CHEV(Cont.)									
C-3500 SERIES- 1 TON - CONVENTIONAL CAB, PICKUP AND SUBURBAN(Cont.)									
1992									
Pickup with Single Rear Wheels	Ra	GM	13 " x 2-1/2 "	2042T - S655	R46451	R40H378	R40H7055	R40H2588	R40H2589
	Ra	GM	13 " x 3-1/2 "	2157T - S656	R46452	R40H378	R40H7055	R40H2588	R40H2589
Single Rear Wheels	Ra	GM	13 " x 2-1/2 "	2042T - S655	R46451	R40H378	R40H7055	R40H2588	R40H2589
1991									
Dual Rear Wheels	Fd	GM		7339 - D459	MD459	R40H5083	R40H5788	NR	NR
	Ra	GM	13 " x 3-1/2 "	2157T - 452	R46452	R40H378	R40H7055	R40H2588	R40H2589
Pickup	Fd	GM		7260 - D370	MD370	R40H5083	R40H5707	NR	NR
	Fd	GM		7260 - D370	MD370	R40H5083	R40H5707	NR	NR
Pickup with Dual Rear Wheels	Fd	GM		7339 - D459	MD459	R40H5083	R40H5788	NR	NR
	Ra	GM	13 " x 3-1/2 "	2157T - 452	R46452	R40H378	R40H7055	R40H2588	R40H2589
Pickup with Single Rear Wheels	Ra	GM	13 " x 2-1/2 "	2042AT - 451	R46451	R40H378	R40H7055	R40H2588	R40H2589
Single Rear Wheels	Ra	GM	13 " x 2-1/2 "	2042AT - 451	R46451	R40H378	R40H7055	R40H2588	R40H2589
12,500, 15,000lb. GVW	Rd	BX		7081 - D149	MD149	R40H5010	R40H5529	NR	NR
Dual Rear Wheels with Heavy Duty 12,500, 15,000lb. GVW	Fd	BX		7081 - D149	MD149	R40H5010	R40H5529	NR	NR
	Fd	BX		7081 - D149	MD149	R40H5010	R40H5529	NR	NR
Pickup 12,500, 15,000lb. GVW	Rd	BX		7081 - D149	MD149	R40H5010	R40H5529	NR	NR
1990									
	Ra	GM	13 " x 2-1/2 "	2042AT - 451	R46451	R40H378	R40H7055	R40H2588	R40H2589
	Ra	GM	13 " x 2-1/2 "	2042AT - 451	R46451	R40H378	R40H7055	R40H2588	R40H2589
	Ra	GM	13 " x 3-1/2 "	2157T - 452	R46452	R40H378	R40H7055	R40H2588	R40H2589
Dual Rear Wheels	Fd	GM		7339 - D459	MD459	R40H5083	R40H5788	NR	NR
Pickup	Fd	GM		7260 - D370	MD370	R40H5083	R40H5707	NR	NR
	Fd	GM		7260 - D370	MD370	R40H5083	R40H5707	NR	NR
	Ra	GM	13 " x 2-1/2 "	2042AT - 451	R46451	R40H378	R40H7055	R40H2588	R40H2589
	Ra	GM	13 " x 2-1/2 "	2042AT - 451	R46451	R40H378	R40H7055	R40H2588	R40H2589
Pickup with Dual Rear Wheels	Fd	GM		7339 - D459	MD459	R40H5083	R40H5788	NR	NR
1989									
	Ra	GM	13 " x 2-1/2 "	2042AT - 451	R46451	R40H378	R40H7055	R40H2588	R40H2589
	Ra	GM	13 " x 2-1/2 "	2042AT - 451	R46451	R40H378	R40H7055	R40H2588	R40H2589
	Ra	GM	13 " x 3-1/2 "	2157T - 452	R46452	R40H378	R40H7055	R40H2588	R40H2589
Dual Rear Wheels	Fd	GM		7260 - D370	MD370	R40H5083	R40H5707	NR	NR
Pickup	Fd	GM		7260 - D370	MD370	R40H5083	R40H5707	NR	NR
	Fd	GM		7260 - D370	MD370	R40H5083	R40H5707	NR	NR
	Ra	GM	13 " x 2-1/2 "	2042AT - 451	R46451	R40H378	R40H7055	R40H2588	R40H2589
	Ra	GM	13 " x 2-1/2 "	2042AT - 451	R46451	R40H378	R40H7055	R40H2588	R40H2589
	Ra	GM	13 " x 3-1/2 "	2157T - 452	R46452	R40H378	R40H7055	R40H2588	R40H2589
Pickup with Dual Rear Wheels	Fd	GM		7260 - D370	MD370	R40H5083	R40H5707	NR	NR
1988									
	Ra	GM	13 " x 2-1/2 "	2042AT - 451	R46451	R40H378	R40H7055	R40H2588	R40H2589
	Ra	GM	13 " x 2-1/2 "	2042AT - 451	R46451	R40H378	R40H7055	R40H2588	R40H2589
	Ra	GM	13 " x 3-1/2 "	2157T - 452	R46452	R40H378	R40H7055	R40H2588	R40H2589
Dual Rear Wheels	Fd	GM		7260 - D370	MD370	R40H5083	R40H5707	NR	NR
Pickup	Fd	GM		7260 - D370	MD370	R40H5083	R40H5707	NR	NR
	Fd	GM		7260 - D370	MD370	R40H5083	R40H5707	NR	NR
	Ra	GM	13 " x 2-1/2 "	2042AT - 451	R46451	R40H378	R40H7055	R40H2588	R40H2589
	Ra	GM	13 " x 2-1/2 "	2042AT - 451	R46451	R40H378	R40H7055	R40H2588	R40H2589
	Ra	GM	13 " x 3-1/2 "	2157T - 452	R46452	R40H378	R40H7055	R40H2588	R40H2589
Pickup with Dual Rear Wheels	Fd	GM		7260 - D370	MD370	R40H5083	R40H5707	NR	NR
1986									
Dual Rear Wheels	Fd	BX		7081 - D149	MD149	R40H5010	R40H5529	NR	NR
	Ra	GM	13 " x 2-1/2 "	2042AT - 451	R46451	R40H378	R40H7055	R40H2588	R40H2589
	Ra	GM	13 " x 2-1/2 "	2042AT - 451	R46451	R40H378	R40H7055	R40H2588	R40H2589
	Ra	GM	13 " x 3-1/2 "	2157T - 452	R46452	R40H378	R40H7055	R40H2588	R40H2589
	Ra	GM	13 " x 3-1/2 "	2157T - 452	R46452	R40H378	R40H7055	R40H2588	R40H2589

32 - For rotor only use R44141480

280 - 10 1/2" Ring Gear

282 - 10 1/2" Ring Gear, First Design; Use 3 3/8" Outside Diameter Axle Tubes

293 - With 9 1/2" Ring Gear and 6 3/8" Drum Width

346 - 4500 lb. Casting Number 2238451452, 10mm Inlet

381 - Rotor and Hub One Piece Assembly W/O ABS Ring

405 - Rotor Only

MERITOR DRUM OR ROTOR NO.	CALIPER OR CYLINDER BORE SIZE	MERITOR CALIPER OR WHEEL CYLINDER (LEFT)	MERITOR CALIPER OR WHEEL CYLINDER (RIGHT)	MERITOR CALIPER OR WHEEL CYLINDER REPAIR KIT	MERITOR CALIPER PISTON	MERITOR MASTER CYLINDER	MERITOR MASTER CYLINDER KIT	MERITOR BRAKE HOSE (LEFT)	MERITOR BRAKE HOSE (RIGHT)
									GMC / CHEV(Cont.)
C-3500 SERIES- 1 TON - CONVENTIONAL CAB, PICKUP AND SUBURBAN(Cont.)									
R44140363[282]	1-1/16 "	R4133709	R4133709	N/A	NR	-	-	-	-
R44140619	1-1/16 "	R4133709	R4133709	N/A	NR	-	-	-	-
R44140363[282]	1-1/16 "	R4133709	R4133709	N/A	NR	-	-	-	-
R44141866[405]	3-25/32 "	R42R55687	R42R55688	R4066211	R4090188S	-	-	-	-
R44140388[280]	1-3/16 "	R4133708	R4133708	R4166872	NR	-	-	-	-
R44141540[381]	3-5/32 "	R42R55497	R42R55496	R4066330	R4090101S	-	-	-	-
R44141540[381]	3-5/32 "	R42R55497	R42R55496	R4066330	R4090101S	-	-	-	-
R44141866[405]	3-25/32 "	R42R55687	R42R55688	R4066211	R4090188S	-	-	-	-
R44140388[280]	1-3/16 "	R4133708	R4133708	R4166872	NR	-	-	-	-
R44140363[282]	1-1/16 "	R4133709	R4133709	N/A	NR	-	-	-	-
R44140363[282]	1-1/16 "	R4133709	R4133709	N/A	NR	-	-	-	-
R44141483[405]	3-3/8 "	R42R55200	R42R55199	R4066780	R4090021	-	-	-	-
R44141480[405]	3-3/8 "	R42R55200	R42R55199[346]	R4066780	R4090021	-	-	-	-
R44141480[405]	3-3/8 "	R42R55200	R42R55199[346]	R4066780	R4090021	-	-	-	-
R44141483[405]	3-3/8 "	R42R55200	R42R55199	R4066780	R4090021	-	-	-	-
R44140449[293]	1-1/16 "	R4133709	R4133709	N/A	NR	-	-	-	-
R44140536[280]	1-1/16 "	R4133709	R4133709	N/A	NR	-	-	-	-
R44140388[280]	1-3/16 "	R4133708	R4133708	R4166872	NR	-	-	-	-
R44141866[405]	3-25/32 "	R42R55687	R42R55688	R4066211	R4090188S	-	-	-	-
R44141540[381]	3-5/32 "	R42R55497	R42R55496	R4066330	R4090101S	-	-	-	-
R44141540[381]	3-5/32 "	R42R55497	R42R55496	R4066330	R4090101S	-	-	-	-
R44140536[280]	1-1/16 "	R4133709	R4133709	N/A	NR	-	-	-	-
R44140449[293]	1-1/16 "	R4133709	R4133709	N/A	NR	-	-	-	-
R44141866[405]	3-25/32 "	R42R55687	R42R55688	R4066211	R4090188S	-	-	-	-
R44140536[280]	1-1/16 "	R4133709	R4133709	N/A	NR	-	-	-	-
R44140449[293]	1-1/16 "	R4133709	R4133709	N/A	NR	-	-	-	-
R44140388[280]	1-3/16 "	R4133708	R4133708	R4166872	NR	-	-	-	-
R44141630	3-5/32 "	R42R55497	R42R55496	R4066330	R4090101S	-	-	-	-
R44141540[381]	3-5/32 "	R42R55497	R42R55496	R4066330	R4090101S	-	-	-	-
R44141540[381]	3-5/32 "	R42R55497	R42R55496	R4066330	R4090101S	-	-	-	-
R44140449[293]	1-1/16 "	R4133709	R4133709	N/A	NR	-	-	-	-
R44140536[280]	1-1/16 "	R4133709	R4133709	N/A	NR	-	-	-	-
R44140388[280]	1-3/16 "	R4133708	R4133708	R4166872	NR	-	-	-	-
R44141630	3-5/32 "	R42R55497	R42R55496	R4066330	R4090101S	-	-	-	-
R44140536[280]	1-1/16 "	R4133709	R4133709	N/A	NR	-	-	-	-
R44140449[293]	1-1/16 "	R4133709	R4133709	N/A	NR	-	-	-	-
R44140388[280]	1-3/16 "	R4133708	R4133708	R4166872	NR	-	-	-	-
R44141630	3-5/32 "	R42R55497	R42R55496	R4066330	R4090101S	-	-	-	-
R44141540[381]	3-5/32 "	R42R55497	R42R55496	R4066330	R4090101S	-	-	-	-
R44141540[381]	3-5/32 "	R42R55497	R42R55496	R4066330	R4090101S	-	-	-	-
R44140449[293]	1-1/16 "	R4133709	R4133709	N/A	NR	-	-	-	-
R44140536[280]	1-1/16 "	R4133709	R4133709	N/A	NR	-	-	-	-
R44140388[280]	1-3/16 "	R4133708	R4133708	R4166872	NR	-	-	-	-
R44141630	3-5/32 "	R42R55497	R42R55496	R4066330	R4090101S	-	-	-	-
R44141130[32]	3-3/8 "	R42R55200	R42R55199[346]	R4066780	R4090021	-	-	R451451	R4577241
R44140363[282]	1-3/16 "	R4133708	R4133708	R4166872	NR	-	-	-	-
R44140363[282]	1-3/16 "	R4133708	R4133708	R4166872	NR	-	-	-	-
R44140388[280]	1-3/16 "	R4133708	R4133708	R4166872	NR	-	-	-	-
R44140388[280]	1-3/16 "	R4133708	R4133708	R4166872	NR	-	-	-	-

MAKE MODEL YEAR AXLE CODE AXLE WEIGHT	AXLE & BRK. TYPE	BRK. MFG.	BRAKE SIZE	FMSI	MERITOR DISC PAD OR BRAKE SHOE	MERITOR GUIDE PIN OR RETURN SPRING KIT	MERITOR CALIPER HWD. KIT OR RETURN SPRING KIT	MERITOR ADJUSTER KIT (LEFT WHEEL)	MERITOR ADJUSTER KIT (RIGHT WHEEL)
GMC / CHEV(Cont.)									
C-3500 SERIES- 1 TON - CONVENTIONAL CAB, PICKUP AND SUBURBAN(Cont.)									
1986									
Pickup with Dual Rear Wheels	Fd	BX		7081 - D149	MD149	R40H5010	R40H5529	NR	NR
Single Rear Wheels	Fd	BX		7081 - D149	MD149	R40H5010	R40H5529	NR	NR
	Fd	BX		7081 - D149	MD149	R40H5010	R40H5529	NR	NR
	Ra	GM	13 " x 2-1/2 "	2042AT - 451	R46451	R40H378	R40H7055	R40H2588	R40H2589
	Ra	GM	13 " x 2-1/2 "	2042AT - 451	R46451	R40H378	R40H7055	R40H2588	R40H2589
	Ra	GM	13 " x 3-1/2 "	2157T - 452	R46452	R40H378	R40H7055	R40H2588	R40H2589
	Ra	GM	13 " x 3-1/2 "	2157T - 452	R46452	R40H378	R40H7055	R40H2588	R40H2589
1985									
Dual Rear Wheels	Fd	BX		7081 - D149	MD149	R40H5010	R40H5529	NR	NR
	Ra	GM	13 " x 2-1/2 "	2042AT - 451	R46451	R40H378	R40H7055	R40H2588	R40H2589
	Ra	GM	13 " x 2-1/2 "	2042AT - 451	R46451	R40H378	R40H7055	R40H2588	R40H2589
	Ra	GM	13 " x 3-1/2 "	2157T - 452	R46452	R40H378	R40H7055	R40H2588	R40H2589
	Ra	GM	13 " x 3-1/2 "	2157T - 452	R46452	R40H378	R40H7055	R40H2588	R40H2589
Pickup with Dual Rear Wheels	Fd	BX		7081 - D149	MD149	R40H5010	R40H5529	NR	NR
Single Rear Wheels	Fd	BX		7081 - D149	MD149	R40H5010	R40H5529	NR	NR
	Fd	BX		7081 - D149	MD149	R40H5010	R40H5529	NR	NR
	Ra	GM	13 " x 2-1/2 "	2042AT - 451	R46451	R40H378	R40H7055	R40H2588	R40H2589
	Ra	GM	13 " x 2-1/2 "	2042AT - 451	R46451	R40H378	R40H7055	R40H2588	R40H2589
	Ra	GM	13 " x 3-1/2 "	2157T - 452	R46452	R40H378	R40H7055	R40H2588	R40H2589
	Ra	GM	13 " x 3-1/2 "	2157T - 452	R46452	R40H378	R40H7055	R40H2588	R40H2589
1984									
Dual Rear Wheels	Fd	BX		7081 - D149	MD149	R40H5010	R40H5529	NR	NR
	Ra	GM	13 " x 2-1/2 "	2042AT - 451	R46451	R40H378	R40H7055	R40H2588	R40H2589
	Ra	GM	13 " x 2-1/2 "	2042AT - 451	R46451	R40H378	R40H7055	R40H2588	R40H2589
	Ra	GM	13 " x 3-1/2 "	2157T - 452	R46452	R40H378	R40H7055	R40H2588	R40H2589
	Ra	GM	13 " x 3-1/2 "	2157T - 452	R46452	R40H378	R40H7055	R40H2588	R40H2589
Pickup with Dual Rear Wheels	Fd	BX		7081 - D149	MD149	R40H5010	R40H5529	NR	NR
Single Rear Wheels	Fd	BX		7081 - D149	MD149	R40H5010	R40H5529	NR	NR
	Fd	BX		7081 - D149	MD149	R40H5010	R40H5529	NR	NR
	Ra	GM	13 " x 2-1/2 "	2042AT - 451	R46451	R40H378	R40H7055	R40H2588	R40H2589
	Ra	GM	13 " x 2-1/2 "	2042AT - 451	R46451	R40H378	R40H7055	R40H2588	R40H2589
	Ra	GM	13 " x 3-1/2 "	2157T - 452	R46452	R40H378	R40H7055	R40H2588	R40H2589
	Ra	GM	13 " x 3-1/2 "	2157T - 452	R46452	R40H378	R40H7055	R40H2588	R40H2589
1983									
Dual Rear Wheels	Fd	BX		7081 - D149	MD149	R40H5010	R40H5529	NR	NR
	Fd	BX		7081 - D149	MD149	R40H5010	R40H5529	NR	NR
	Ra	GM	13 " x 3-1/2 "	2157T - 452	R46452	R40H378	R40H7055	R40H2588	R40H2589
	Ra	GM	13 " x 3-1/2 "	2157T - 452	R46452	R40H378	R40H7055	R40H2588	R40H2589
Pickup with Single Rear Wheels	Fd	BX		7081 - D149	MD149	R40H5010	R40H5529	NR	NR
Single Rear Wheels	Fd	BX		7081 - D149	MD149	R40H5010	R40H5529	NR	NR
	Ra	GM	13 " x 3-1/2 "	2157T - 452	R46452	R40H378	R40H7055	R40H2588	R40H2589
	Ra	GM	13 " x 3-1/2 "	2157T - 452	R46452	R40H378	R40H7055	R40H2588	R40H2589
1982									
Dual Rear Wheels	Fd	BX		7081 - D149	MD149	R40H5010	R40H5529	NR	NR
	Fd	BX		7081 - D149	MD149	R40H5010	R40H5529	NR	NR
	Ra	GM	13 " x 3-1/2 "	2157T - 452	R46452	R40H378	R40H7055	R40H2588	R40H2589
	Ra	GM	13 " x 3-1/2 "	2157T - 452	R46452	R40H378	R40H7055	R40H2588	R40H2589
Pickup with Single Rear Wheels	Fd	BX		7081 - D149	MD149	R40H5010	R40H5529	NR	NR
Single Rear Wheels	Fd	BX		7081 - D149	MD149	R40H5010	R40H5529	NR	NR
	Ra	GM	13 " x 3-1/2 "	2157T - 452	R46452	R40H378	R40H7055	R40H2588	R40H2589
	Ra	GM	13 " x 3-1/2 "	2157T - 452	R46452	R40H378	R40H7055	R40H2588	R40H2589
1981									
	Fd	BX		7081 - D149	MD149	R40H5010	R40H5529	NR	NR
	Fd	BX		7081 - D149	MD149	R40H5010	R40H5529	NR	NR
	Ra	GM	13 " x 3-1/2 "	2157T - 452	R46452	R40H378	R40H7055	R40H2588	R40H2589
	Ra	GM	13 " x 3-1/2 "	2157T - 452	R46452	R40H378	R40H7055	R40H2588	R40H2589
Dual Rear Wheels	Fd	BX		7081 - D149	MD149	R40H5010	R40H5529	NR	NR
	Fd	BX		7081 - D149	MD149	R40H5010	R40H5529	NR	NR

32 - For rotor only use R44141480

280 - 10 1/2" Ring Gear

282 - 10 1/2" Ring Gear, First Design; Use 3 3/8" Outside Diameter Axle Tubes

346 - 4500 lb. Casting Number 2238451452, 10mm Inlet

353 - With 13 x 3.5" Rear Brakes

381 - Rotor and Hub One Piece Assembly W/O ABS Ring

MERITOR DRUM OR ROTOR NO.	CALIPER OR CYLINDER BORE SIZE	MERITOR CALIPER OR WHEEL CYLINDER (LEFT)	MERITOR CALIPER OR WHEEL CYLINDER (RIGHT)	MERITOR CALIPER OR WHEEL CYLINDER REPAIR KIT	MERITOR CALIPER PISTON	MERITOR MASTER CYLINDER	MERITOR MASTER CYLINDER KIT	MERITOR BRAKE HOSE (LEFT)	MERITOR BRAKE HOSE (RIGHT)
									GMC / CHEV(Cont.)
									C-3500 SERIES- 1 TON - CONVENTIONAL CAB, PICKUP AND SUBURBAN(Cont.)
R44141130[32]	3-3/8 "	R42R55200	R42R55199[346]	R4066780	R4090021	-	-	R451451	R4577241
R44141152[381]	3-3/8 "	R42R55200	R42R55199[346]	R4066780	R4090021	-	-	R451451	R4577241
R44141152[381]	3-3/8 "	R42R55200	R42R55199[346]	R4066780	R4090021	-	-	R451451	R4577241
R44140363[282]	1-1/16 "	R4133709	R4133709	N/A	NR	-	-	-	-
R44140363[282]	1-1/16 "	R4133709	R4133709	N/A	NR	-	-	-	-
R44140387	1-1/16 "	R4133709	R4133709	N/A	NR	-	-	-	-
R44140387	1-1/16 "	R4133709	R4133709	N/A	NR	-	-	-	-
R44141130[32]	3-3/8 "	R42R55200	R42R55199[346]	R4066780	R4090021	-	-	R451451	R4577241
R44140363[282]	1-3/16 "	R4133708	R4133708	R4166872	NR	-	-	-	-
R44140363[282]	1-3/16 "	R4133708	R4133708	R4166872	NR	-	-	-	-
R44140388[280]	1-3/16 "	R4133708	R4133708	R4166872	NR	-	-	-	-
R44140388[280]	1-3/16 "	R4133708	R4133708	R4166872	NR	-	-	-	-
R44141130[32]	3-3/8 "	R42R55200	R42R55199[346]	R4066780	R4090021	-	-	R451451	R4577241
R44141152[381]	3-3/8 "	R42R55200	R42R55199[346]	R4066780	R4090021	-	-	R451451	R4577241
R44141152[381]	3-3/8 "	R42R55200	R42R55199[346]	R4066780	R4090021	-	-	R451451	R4577241
R44140363[282]	1-1/16 "	R4133709	R4133709	N/A	NR	-	-	-	-
R44140363[282]	1-1/16 "	R4133709	R4133709	N/A	NR	-	-	-	-
R44140387	1-1/16 "	R4133709	R4133709	N/A	NR	-	-	-	-
R44140387	1-1/16 "	R4133709	R4133709	N/A	NR	-	-	-	-
R44141130[32]	3-3/8 "	R42R55200	R42R55199[346]	R4066780	R4090021	-	-	R451451[353]	R4577241
R44140363[282]	1-3/16 "	R4133708	R4133708	R4166872	NR	-	-	-	-
R44140363[282]	1-3/16 "	R4133708	R4133708	R4166872	NR	-	-	-	-
R44140388[280]	1-3/16 "	R4133708	R4133708	R4166872	NR	-	-	-	-
R44140388[280]	1-3/16 "	R4133708	R4133708	R4166872	NR	-	-	-	-
R44141130[32]	3-3/8 "	R42R55200	R42R55199[346]	R4066780	R4090021	-	-	R451451[353]	R4577241
R44141152[381]	3-3/8 "	R42R55200	R42R55199[346]	R4066780	R4090021	-	-	R451451[353]	R4577241
R44141152[381]	3-3/8 "	R42R55200	R42R55199[346]	R4066780	R4090021	-	-	R451451[353]	R4577241
R44140363[282]	1-1/16 "	R4133709	R4133709	N/A	NR	-	-	-	-
R44140363[282]	1-1/16 "	R4133709	R4133709	N/A	NR	-	-	-	-
R44140387	1-1/16 "	R4133709	R4133709	N/A	NR	-	-	-	-
R44140387	1-1/16 "	R4133709	R4133709	N/A	NR	-	-	-	-
R44141130[32]	3-3/8 "	R42R55200	R42R55199[346]	R4066780	R4090021	-	-	R451451[353]	R4577241
R44141130[32]	3-3/8 "	R42R55200	R42R55199[346]	R4066780	R4090021	-	-	R451451[353]	R4577241
R44140388[280]	1-3/16 "	R4133708	R4133708	R4166872	NR	-	-	-	-
R44140388[280]	1-3/16 "	R4133708	R4133708	R4166872	NR	-	-	-	-
R44141152[381]	3-3/8 "	R42R55200	R42R55199[346]	R4066780	R4090021	-	-	R451451[353]	R4577241
R44141152[381]	3-3/8 "	R42R55200	R42R55199[346]	R4066780	R4090021	-	-	R451451[353]	R4577241
R44140387	1-3/16 "	R4133708	R4133708	R4166872	NR	-	-	-	-
R44140387	1-3/16 "	R4133708	R4133708	R4166872	NR	-	-	-	-
R44141130[32]	3-3/8 "	R42R55200	R42R55199[346]	R4066780	R4090021	-	-	R451451[353]	R4577241
R44141130[32]	3-3/8 "	R42R55200	R42R55199[346]	R4066780	R4090021	-	-	R451451[353]	R4577241
R44140388[280]	1-3/16 "	R4133708	R4133708	R4166872	NR	-	-	-	-
R44140388[280]	1-3/16 "	R4133708	R4133708	R4166872	NR	-	-	-	-
R44141152[381]	3-3/8 "	R42R55200	R42R55199[346]	R4066780	R4090021	-	-	R451451[353]	R4577241
R44141152[381]	3-3/8 "	R42R55200	R42R55199[346]	R4066780	R4090021	-	-	R451451[353]	R4577241
R44140387	1-3/16 "	R4133708	R4133708	R4166872	NR	-	-	-	-
R44140387	1-3/16 "	R4133708	R4133708	R4166872	NR	-	-	-	-
R44141152[381]	3-3/8 "	R42R55200	R42R55199[346]	R4066780	R4090021	-	-	R451451[353]	R4577241
R44141152[381]	3-3/8 "	R42R55200	R42R55199[346]	R4066780	R4090021	-	-	R451451[353]	R4577241
R44140388[280]	1-3/16 "	R4133708	R4133708	R4166872	NR	-	-	-	-
R44140388[280]	1-3/16 "	R4133708	R4133708	R4166872	NR	-	-	-	-
R44141130[32]	3-3/8 "	R42R55200	R42R55199[346]	R4066780	R4090021	-	-	R451451[353]	R4577241
R44141130[32]	3-3/8 "	R42R55200	R42R55199[346]	R4066780	R4090021	-	-	R451451[353]	R4577241

MAKE MODEL YEAR AXLE CODE AXLE WEIGHT	AXLE & BRK. TYPE	BRK. MFG.	BRAKE SIZE	FMSI	MERITOR DISC PAD OR BRAKE SHOE	MERITOR GUIDE PIN OR RETURN SPRING KIT	MERITOR CALIPER HWD. KIT OR RETURN SPRING KIT	MERITOR ADJUSTER KIT (LEFT WHEEL)	MERITOR ADJUSTER KIT (RIGHT WHEEL)
GMC / CHEV(Cont.)									
C-3500 SERIES- 1 TON - CONVENTIONAL CAB, PICKUP AND SUBURBAN(Cont.)									
1981									
	Ra	GM	13 " x 3-1/2 "	2157T - 452	R46452	R40H378	R40H7055	R40H2588	R40H2589
	Ra	GM	13 " x 3-1/2 "	2157T - 452	R46452	R40H378	R40H7055	R40H2588	R40H2589
Pickup with Single Rear Wheels	Fd	BX		7081 - D149	MD149	R40H5010	R40H5529	NR	NR
Single Rear Wheels	Fd	BX		7081 - D149	MD149	R40H5010	R40H5529	NR	NR
	Ra	GM	13 " x 3-1/2 "	2157T - 452	R46452	R40H378	R40H7055	R40H2588	R40H2589
	Ra	GM	13 " x 3-1/2 "	2157T - 452	R46452	R40H378	R40H7055	R40H2588	R40H2589
1980									
	Fd	BX		7081 - D149	MD149	R40H5010	R40H5529	NR	NR
	Fd	BX		7081 - D149	MD149	R40H5010	R40H5529	NR	NR
	Ra	GM	13 " x 3-1/2 "	2157T - 452	R46452	R40H378	R40H7055	R40H2588	R40H2589
	Ra	GM	13 " x 3-1/2 "	2157T - 452	R46452	R40H378	R40H7055	R40H2588	R40H2589
1979									
	Fd	BX		7081 - D149	MD149	R40H5010	R40H5529	NR	NR
	Fd	BX		7081 - D149	MD149	R40H5010	R40H5529	NR	NR
	Ra	GM	13 " x 3-1/2 "	2157T - 452	R46452	R40H378	R40H7055	R40H2588	R40H2589
	Ra	GM	13 " x 3-1/2 "	2157T - 452	R46452	R40H378	R40H7055	R40H2588	R40H2589
1978									
	Fd	BX		7081 - D149	MD149	R40H5010	R40H5529	NR	NR
	Fd	BX		7081 - D149	MD149	R40H5010	R40H5529	NR	NR
	Ra	GM	13 " x 3-1/2 "	2157T - 452	R46452	R40H378	R40H7055	R40H2588	R40H2589
	Ra	GM	13 " x 3-1/2 "	2157T - 452	R46452	R40H378	R40H7055	R40H2588	R40H2589
1977									
	Fd	BX		7081 - D149	MD149	R40H5010	R40H5529	NR	NR
	Fd	BX		7081 - D149	MD149	R40H5010	R40H5529	NR	NR
	Ra	GM	13 " x 3-1/2 "	2157T - 452	R46452	R40H378	R40H7055	R40H2588	R40H2589
	Ra	GM	13 " x 3-1/2 "	2157T - 452	R46452	R40H378	R40H7055	R40H2588	R40H2589
1976									
	Fd	BX		7081 - D149	MD149	R40H5010	R40H5529	NR	NR
	Fd	BX		7081 - D149	MD149	R40H5010	R40H5529	NR	NR
	Ra	GM	13 " x 3-1/2 "	2157T - 452	R46452	R40H378	R40H7055	R40H2588	R40H2589
	Ra	GM	13 " x 3-1/2 "	2157T - 452	R46452	R40H378	R40H7055	R40H2588	R40H2589
C4500 TOPKICK, KODIAK - 16,000 lb. GVW									
2007									
Up to 7,000 lb. GVW	Fd	TRW		7914 - D1010	MD1010	NR	R4012072	NR	NR
	Fd	TRW		7914 - D1010	MD1010	NR	R4012072	NR	NR
	Fd	TRW		7914 - D1010	MD1010	NR	R4012072	NR	NR
	Rd	TRW		7969 - D1064	MD1064	NR	-	NR	NR
	Rd	TRW		7914 - D1010	MD1010	NR	R4012072	NR	NR
7,001 lb. GVW and up	Fd	Meritor		7636 - D1032	MD769	NR	R4011729	NR	NR
	Fd	Meritor		7636 - D1032	MD769	NR	R4011729	NR	NR
	Fd	Meritor		7636 - D1032	MD769	NR	R4011729	NR	NR
	Fd	Meritor		7636 - D1032	MD769	NR	R4011729	NR	NR
	Fd	Meritor		7636 - D1032	MD769	NR	R4011729	NR	NR
	Fd	Meritor		7636 - D1032	MD769	NR	R4011729	NR	NR
	Rd	Meritor		7636 - D1032	MD769	NR	R4011729	NR	NR
2006									
Up to 7,000 lb. GVW	Fd	TRW		7914 - D1010	MD1010	NR	R4012072	NR	NR
	Fd	TRW		7914 - D1010	MD1010	NR	R4012072	NR	NR
	Fd	TRW		7914 - D1010	MD1010	NR	R4012072	NR	NR
	Rd	TRW		7914 - D1010	MD1010	NR	R4012072	NR	NR
	Rd	TRW		7969 - D1064	MD1064	NR	-	NR	NR
7,001 lb. GVW and up	Fd	Meritor		7636 - D1032	MD769	NR	R4011729	NR	NR
	Fd	Meritor		7636 - D1032	MD769	NR	R4011729	NR	NR
	Fd	Meritor		7636 - D1032	MD769	NR	R4011729	NR	NR
	Fd	Meritor		7636 - D1032	MD769	NR	R4011729	NR	NR
	Fd	Meritor		7636 - D1032	MD769	NR	R4011729	NR	NR
	Fd	Meritor		7636 - D1032	MD769	NR	R4011729	NR	NR
	Rd	Meritor		7636 - D1032	MD769	NR	R4011729	NR	NR
2005									
Up to 7,000 lb. GVW	Fd	TRW		7914 - D1010	MD1010	NR	R4012072	NR	NR
	Fd	TRW		7914 - D1010	MD1010	NR	R4012072	NR	NR
	Fd	TRW		7914 - D1010	MD1010	NR	R4012072	NR	NR

280 - 10 1/2" Ring Gear
363 - Piston includes Boots and Seals
386 - 10 Hole Rear Rotor With Drum In Hat
346 - 4500 lb. Casting Number 2238451452, 10mm Inlet
365 - Caliper Loaded with Hardware and Disc Pads
387 - 10 Hole Rotor
353 - With 13 x 3.5" Rear Brakes
381 - Rotor and Hub One Piece Assembly W/O ABS Ring
388 - 5 Hole Rotor

MERITOR DRUM OR ROTOR NO.	CALIPER OR CYLINDER BORE SIZE	MERITOR CALIPER OR WHEEL CYLINDER (LEFT)	MERITOR CALIPER OR WHEEL CYLINDER (RIGHT)	MERITOR CALIPER OR WHEEL CYLINDER REPAIR KIT	MERITOR CALIPER PISTON	MERITOR MASTER CYLINDER	MERITOR MASTER CYLINDER KIT	MERITOR BRAKE HOSE (LEFT)	MERITOR BRAKE HOSE (RIGHT)
									GMC / CHEV(Cont.)
C-3500 SERIES- 1 TON - CONVENTIONAL CAB, PICKUP AND SUBURBAN(Cont.)									
R44140388[280]	1-3/16 "	R4133708	R4133708	R4166872	NR	-	-	-	-
R44140388[280]	1-3/16 "	R4133708	R4133708	R4166872	NR	-	-	-	-
R44141152[381]	3-3/8 "	R42R55200	R42R55199[346]	R4066780	R4090021	-	-	R451451[353]	R4577241
R44141152[381]	3-3/8 "	R42R55200	R42R55199[346]	R4066780	R4090021	-	-	R451451[353]	R4577241
R44140387	1-3/16 "	R4133708	R4133708	R4166872	NR	-	-	-	-
R44140387	1-3/16 "	R4133708	R4133708	R4166872	NR	-	-	-	-
R44141152[381]	3-3/8 "	R42R55200	R42R55199[346]	R4066780	R4090021	-	-	R451451[353]	R4577241
R44141152[381]	3-3/8 "	R42R55200	R42R55199[346]	R4066780	R4090021	-	-	R451451[353]	R4577241
R44140388[280]	1-3/16 "	R4133708	R4133708	R4166872	NR	-	-	-	-
R44140388[280]	1-3/16 "	R4133708	R4133708	R4166872	NR	-	-	-	-
R44141152[381]	3-3/8 "	R42R55200	R42R55199[346]	R4066780	R4090021	-	-	R451451[353]	R4577241
R44141152[381]	3-3/8 "	R42R55200	R42R55199[346]	R4066780	R4090021	-	-	R451451[353]	R4577241
R44140388[280]	1-3/16 "	R4133708	R4133708	R4166872	NR	-	-	-	-
R44140388[280]	1-3/16 "	R4133708	R4133708	R4166872	NR	-	-	-	-
R44141152[381]	3-3/8 "	R42R55200	R42R55199[346]	R4066780	R4090021	-	-	-	-
R44141152[381]	3-3/8 "	R42R55200	R42R55199[346]	R4066780	R4090021	-	-	-	-
R44140388[280]	1-3/16 "	R4133708	R4133708	R4166872	NR	-	-	-	-
R44140388[280]	1-3/16 "	R4133708	R4133708	R4166872	NR	-	-	-	-
R44141152[381]	3-3/8 "	R42R55200	R42R55199[346]	R4066780	R4090021	-	-	-	-
R44141152[381]	3-3/8 "	R42R55200	R42R55199[346]	R4066780	R4090021	-	-	-	-
R44140388[280]	1-3/16 "	R4133708	R4133708	R4166872	NR	-	-	-	-
R44140388[280]	1-3/16 "	R4133708	R4133708	R4166872	NR	-	-	-	-
R44141152[381]	3-3/8 "	R42R55200	R42R55199[346]	R4066780	R4090021	-	-	-	-
R44141152[381]	3-3/8 "	R42R55200	R42R55199[346]	R4066780	R4090021	-	-	-	-
R44140388[280]	1-3/16 "	R4133708	R4133708	R4166872	NR	-	-	-	-
R44140388[280]	1-3/16 "	R4133708	R4133708	R4166872	NR	-	-	-	-
									C4500 TOPKICK, KODIAK - 16,000 lb. GVW
R441713810[389]	66mm	R4212067	R4212067	R4012071	R4012070[363]	R413013812	-	-	-
R441712599[388]	66mm	R4212067	R4212067	R4012071	R4012070[363]	R413013812	-	-	-
23-123489-002[387]	66mm	R4212067	R4212067	R4012071	R4012070[363]	R413013812	-	-	-
R441713714[386]	66mm	R4212069	R4212069	-	-	R413013812	-	-	-
R441712599[388]	66mm	R4212067	R4212067	R4012071	R4012070[363]	R413013812	-	-	-
23-123489-002[387]	70mm	60450468002	60450469002[365]	R4011730	60050334	R413013812	-	-	-
R441713810[389]	70mm	60450468002	60450469002[365]	R4011730	60050334	R413013812	-	-	-
R441712599[388]	70mm	60450468002	60450469002[365]	R4011730	60050334	R413013812	-	-	-
R441713810[389]	64mm	60450473001	60450474001[365]	R4011731	R4011511	R413013812	-	-	-
23-123489-002[387]	64mm	60450473001	60450474001[365]	R4011731	R4011511	R413013812	-	-	-
R441712599[388]	64mm	60450473001	60450474001[365]	R4011731	R4011511	R413013812	-	-	-
R441712599[388]	64mm	60450474001	60450473001[365]	R4011731	R4011511	R413013812	-	-	-
R441713810[389]	66mm	R4212067	R4212067	R4012071	R4012070[363]	R413013812	-	-	-
R441712599[388]	66mm	R4212067	R4212067	R4012071	R4012070[363]	R413013812	-	-	-
23-123489-002[387]	66mm	R4212067	R4212067	R4012071	R4012070[363]	R413013812	-	-	-
R441712599[388]	66mm	R4212067	R4212067	R4012071	R4012070[363]	R413013812	-	-	-
R441713714[386]	66mm	R4212069	R4212069	-	-	R413013812	-	-	-
23-123489-002[387]	70mm	60450468002	60450469002[365]	R4011730	60050334	R413013812	-	-	-
R441713810[389]	70mm	60450468002	60450469002[365]	R4011730	60050334	R413013812	-	-	-
R441712599[388]	70mm	60450468002	60450469002[365]	R4011730	60050334	R413013812	-	-	-
R441712599[388]	64mm	60450473001	60450474001[365]	R4011731	R4011511	R413013812	-	-	-
R441713810[389]	64mm	60450473001	60450474001[365]	R4011731	R4011511	R413013812	-	-	-
23-123489-002[387]	64mm	60450473001	60450474001[365]	R4011731	R4011511	R413013812	-	-	-
R441712599[388]	64mm	60450474001	60450473001[365]	R4011731	R4011511	R413013812	-	-	-
R441712599[388]	66mm	R4212067	R4212067	R4012071	R4012070[363]	R413013812	-	-	-
23-123489-002[387]	66mm	R4212067	R4212067	R4012071	R4012070[363]	R413013812	-	-	-
R441713810[389]	66mm	R4212067	R4212067	R4012071	R4012070[363]	R413013812	-	-	-

389 - 8 Hole Rotor

MAKE MODEL YEAR AXLE CODE AXLE WEIGHT	AXLE & BRK. TYPE	BRK. MFG.	BRAKE SIZE	FMSI	MERITOR DISC PAD OR BRAKE SHOE	MERITOR GUIDE PIN OR RETURN SPRING KIT	MERITOR CALIPER HWD. KIT OR RETURN SPRING KIT	MERITOR ADJUSTER KIT (LEFT WHEEL)	MERITOR ADJUSTER KIT (RIGHT WHEEL)
GMC / CHEV(Cont.)									
C4500 TOPKICK, KODIAK - 16,000 lb. GVW(Cont.)									
2005									
	Rd	TRW		7914 - D1010	MD1010	NR	R4012072	NR	NR
	Rd	TRW		7969 - D1064	MD1064	NR	-	NR	NR
7,001 lb. GVW and up	Fd	Meritor		7636 - D1032	MD769	NR	R4011729	NR	NR
	Fd	Meritor		7636 - D1032	MD769	NR	R4011729	NR	NR
	Fd	Meritor		7636 - D1032	MD769	NR	R4011729	NR	NR
	Fd	Meritor		7636 - D1032	MD769	NR	R4011729	NR	NR
	Fd	Meritor		7636 - D1032	MD769	NR	R4011729	NR	NR
	Fd	Meritor		7636 - D1032	MD769	NR	R4011729	NR	NR
	Rd	Meritor		7636 - D1032	MD769	NR	R4011729	NR	NR
2004									
Up to 7,000 lb. GVW	Fd	TRW		7914 - D1010	MD1010	NR	R4012072	NR	NR
	Fd	TRW		7914 - D1010	MD1010	NR	R4012072	NR	NR
	Fd	TRW		7914 - D1010	MD1010	NR	R4012072	NR	NR
	Rd	TRW		7914 - D1010	MD1010	NR	R4012072	NR	NR
	Rd	TRW		7969 - D1064	MD1064	NR	-	NR	NR
7,001 lb. GVW and up	Fd	Meritor		7636 - D1032	MD769	NR	R4011729	NR	NR
	Fd	Meritor		7636 - D1032	MD769	NR	R4011729	NR	NR
	Fd	Meritor		7636 - D1032	MD769	NR	R4011729	NR	NR
	Fd	Meritor		7636 - D1032	MD769	NR	R4011729	NR	NR
	Fd	Meritor		7636 - D1032	MD769	NR	R4011729	NR	NR
	Fd	Meritor		7636 - D1032	MD769	NR	R4011729	NR	NR
	Rd	Meritor		7636 - D1032	MD769	NR	R4011729	NR	NR
2003									
	Rd	TRW		7914 - D1010	MD1010	NR	R4012072	NR	NR
Up to 7,000 lb. GVW	Fd	TRW		7914 - D1010	MD1010	NR	R4012072	NR	NR
	Fd	TRW		7914 - D1010	MD1010	NR	R4012072	NR	NR
	Fd	TRW		7914 - D1010	MD1010	NR	R4012072	NR	NR
	Fd	TRW		7914 - D1010	MD1010	NR	R4012072	NR	NR
	Fd	TRW		7914 - D1010	MD1010	NR	R4012072	NR	NR
	Fd	TRW		7914 - D1010	MD1010	NR	R4012072	NR	NR
7,001 lb. GVW and up	Fd	Meritor		7636 - D1032	MD769	NR	R4011729	NR	NR
	Fd	Meritor		7636 - D1032	MD769	NR	R4011729	NR	NR
	Fd	Meritor		7636 - D1032	MD769	NR	R4011729	NR	NR
C5500 TOPKICK, KODIAK - 18,000 - 19,500 lb. GVW									
2007									
6000, 7000 lb Axle	Fd	TRW		7914 - D1010	MD1010	NR	R4012072	NR	NR
7000 lb Axle	Fd	Meritor		7636 - D1032	MD769	NR	R4011729	NR	NR
8000 lb Axle	Fd	Meritor		7636 - D1032	MD769	NR	R4011729	NR	NR
	Fd	Meritor		7636 - D1032	MD769	NR	R4011729	NR	NR
11,000, 13,500 lb Axle	Rd	TRW		7914 - D1010	MD1010	NR	R4012072	NR	NR
13,500 lb Axle	Rd	TRW		7914 - D1064	MD1064	NR	-	NR	NR
15,000, 17,900, 19,000 lb Axle	Rd	Meritor		7636 - D1032	MD769	NR	R4011729	NR	NR
2006									
6000, 7000 lb Axle	Fd	TRW		7914 - D1010	MD1010	NR	R4012072	NR	NR
7000 lb Axle	Fd	Meritor		7636 - D1032	MD769	NR	R4011729	NR	NR
8000 lb Axle	Fd	Meritor		7636 - D1032	MD769	NR	R4011729	NR	NR
	Fd	Meritor		7636 - D1032	MD769	NR	R4011729	NR	NR
11,000, 13,500 lb Axle	Rd	TRW		7914 - D1010	MD1010	NR	R4012072	NR	NR
13,500 lb Axle	Rd	TRW		7914 - D1064	MD1064	NR	-	NR	NR
15,000, 17,900, 19,000 lb Axle	Rd	Meritor		7636 - D1032	MD769	NR	R4011729	NR	NR
2005									
6000, 7000 lb Axle	Fd	TRW		7914 - D1010	MD1010	NR	R4012072	NR	NR
7000 lb Axle	Fd	Meritor		7636 - D1032	MD769	NR	R4011729	NR	NR
8000 lb Axle	Fd	Meritor		7636 - D1032	MD769	NR	R4011729	NR	NR
	Fd	Meritor		7636 - D1032	MD769	NR	R4011729	NR	NR
11,000, 13,500 lb Axle	Rd	TRW		7914 - D1010	MD1010	NR	R4012072	NR	NR
13,500 lb Axle	Rd	TRW		7914 - D1064	MD1064	NR	-	NR	NR
15,000, 17,900, 19,000 lb Axle	Rd	Meritor		7636 - D1032	MD769	NR	R4011729	NR	NR
2004									
6000, 7000 lb Axle	Fd	TRW		7914 - D1010	MD1010	NR	R4012072	NR	NR

363 - Piston includes Boots and Seals
365 - Caliper Loaded with Hardware and Disc Pads
386 - 10 Hole Rear Rotor With Drum In Hat
387 - 10 Hole Rotor
388 - 5 Hole Rotor
389 - 8 Hole Rotor

MERITOR DRUM OR ROTOR NO.	CALIPER OR CYLINDER BORE SIZE	MERITOR CALIPER OR WHEEL CYLINDER (LEFT)	MERITOR CALIPER OR WHEEL CYLINDER (RIGHT)	MERITOR CALIPER OR WHEEL CYLINDER REPAIR KIT	MERITOR CALIPER PISTON	MERITOR MASTER CYLINDER	MERITOR MASTER CYLINDER KIT	MERITOR BRAKE HOSE (LEFT)	MERITOR BRAKE HOSE (RIGHT)
									GMC / CHEV(Cont.)
									C4500 TOPKICK, KODIAK - 16,000 lb. GVW(Cont.)
R441712599[388]	66mm	R4212067	R4212067	R4012071	R4012070[363]	R413013812	-	-	-
R441713714[386]	66mm	R4212069	R4212069	-	-	R413013812	-	-	-
23-123489-002[387]	70mm	60450468002	60450469002[365]	R4011730	60050334	R413013812	-	-	-
R441713810[389]	70mm	60450468002	60450469002[365]	R4011730	60050334	R413013812	-	-	-
23-123489-002[387]	64mm	60450473001	60450474001[365]	R4011731	R4011511	R413013812	-	-	-
R441712599[388]	64mm	60450473001	60450474001[365]	R4011731	R4011511	R413013812	-	-	-
R441713810[389]	64mm	60450473001	60450474001[365]	R4011731	R4011511	R413013812	-	-	-
R441712599[388]	70mm	60450468002	60450469002[365]	R4011730	60050334	R413013812	-	-	-
R441712599[388]	64mm	60450474001	60450473001[365]	R4011731	R4011511	R413013812	-	-	-
R441713810[389]	66mm	R4212067	R4212067	R4012071	R4012070[363]	R413013812	-	-	-
R441712599[388]	66mm	R4212067	R4212067	R4012071	R4012070[363]	R413013812	-	-	-
23-123489-002[387]	66mm	R4212067	R4212067	R4012071	R4012070[363]	R413013812	-	-	-
R441712599[388]	66mm	R4212067	R4212067	R4012071	R4012070[363]	R413013812	-	-	-
R441713714[386]	66mm	R4212069	R4212069	-	-	R413013812	-	-	-
23-123489-002[387]	70mm	60450468002	60450469002[365]	R4011730	60050334	R413013812	-	-	-
R441712599[386]	64mm	60450473001	60450474001[365]	R4011731	R4011511	R413013812	-	-	-
23-123489-002[387]	64mm	60450473001	60450474001[365]	R4011731	R4011511	R413013812	-	-	-
R441713810[389]	64mm	60450473001	60450474001[365]	R4011731	R4011511	R413013812	-	-	-
R441712599[388]	70mm	60450468002	60450469002[365]	R4011730	60050334	R413013812	-	-	-
R441713810[389]	70mm	60450468002	60450469002[365]	R4011730	60050334	R413013812	-	-	-
R441712599[388]	64mm	60450474001	60450473001[365]	R4011731	R4011511	R413013812	-	-	-
R441712599[388]	60mm	R4212068	R4212068	R4012074	R4012073[363]	R413013812	-	-	-
R441712599[388]	60mm	R4212068	R4212068	R4012074	R4012073[363]	R413013812	-	-	-
23-123489-002[387]	66mm	R4212067	R4212067	R4012071	R4012070[363]	R413013812	-	-	-
R441713810[389]	60mm	R4212068	R4212068	R4012074	R4012073[363]	R413013812	-	-	-
R441712599[388]	66mm	R4212067	R4212067	R4012071	R4012070[363]	R413013812	-	-	-
23-123489-002[387]	60mm	R4212068	R4212068	R4012074	R4012073[363]	R413013812	-	-	-
R441713810[389]	66mm	R4212067	R4212067	R4012071	R4012070[363]	R413013812	-	-	-
23-123489-002[387]	70mm	60450468002	60450469002[365]	R4011730	60050334	R413013812	-	-	-
R441713810[389]	70mm	60450468002	60450469002[365]	R4011730	60050334	R413013812	-	-	-
R441712599[388]	70mm	60450468002	60450469002[365]	R4011730	60050334	R413013812	-	-	-
									C5500 TOPKICK, KODIAK - 18,000 - 19,500 lb. GVW
R441712599[388]	66mm	R4212067	R4212067	R4012071	R4012070[363]	R413013812	-	-	-
R441712599[388]	64mm	60450473001	60450474001[365]	R4011731	R4011511	R413013812	-	-	-
R441713810[389]	64mm	60450473001	60450474001[365]	R4011731	R4011511	R413013812	-	-	-
23-123489-002[387]	64mm	60450473001	60450474001[365]	R4011731	R4011511	R413013812	-	-	-
R441712599[388]	66mm	R4212067	R4212067	R4012071	R4012070[363]	R413013812	-	-	-
R441713714[386]	66mm	R4212069	R4212069	-	-	R413013812	-	-	-
23-123489-002[387]	64mm	60450474001	60450473001[365]	R4011731	R4011511	R413013812	-	-	-
R441712599[388]	66mm	R4212067	R4212067	R4012071	R4012070[363]	R413013812	-	-	-
R441712599[388]	64mm	60450473001	60450474001[365]	R4011731	R4011511	R413013812	-	-	-
23-123489-002[387]	64mm	60450473001	60450474001[365]	R4011731	R4011511	R413013812	-	-	-
R441713810[389]	64mm	60450473001	60450474001[365]	R4011731	R4011511	R413013812	-	-	-
R441712599[388]	66mm	R4212067	R4212067	R4012071	R4012070[363]	R413013812	-	-	-
R441713714[386]	66mm	R4212069	R4212069	-	-	R413013812	-	-	-
23-123489-002[387]	64mm	60450474001	60450473001[365]	R4011731	R4011511	R413013812	-	-	-
R441712599[388]	66mm	R4212067	R4212067	R4012071	R4012070[363]	R413013812	-	-	-
R441712599[388]	64mm	60450473001	60450474001[365]	R4011731	R4011511	R413013812	-	-	-
R441713810[389]	64mm	60450473001	60450474001[365]	R4011731	R4011511	R413013812	-	-	-
23-123489-002[387]	64mm	60450473001	60450474001[365]	R4011731	R4011511	R413013812	-	-	-
R441712599[388]	66mm	R4212067	R4212067	R4012071	R4012070[363]	R413013812	-	-	-
R441713714[386]	66mm	R4212069	R4212069	-	-	R413013812	-	-	-
23-123489-002[387]	64mm	60450474001	60450473001[365]	R4011731	R4011511	R413013812	-	-	-
R441712599[388]	66mm	R4212067	R4212067	R4012071	R4012070[363]	R413013812	-	-	-

MAKE MODEL YEAR AXLE CODE AXLE WEIGHT	AXLE & BRK. TYPE	BRK. MFG.	BRAKE SIZE	FMSI	MERITOR DISC PAD OR BRAKE SHOE	MERITOR GUIDE PIN OR RETURN SPRING KIT	MERITOR CALIPER HWD. KIT OR RETURN SPRING KIT	MERITOR ADJUSTER KIT (LEFT WHEEL)	MERITOR ADJUSTER KIT (RIGHT WHEEL)
GMC / CHEV(Cont.)									
C5500 TOPKICK, KODIAK - 18,000 - 19,500 lb. GVW(Cont.)									
2004									
7000 lb Axle	Fd	Meritor		7636 - D1032	MD769	NR	R4011729	NR	NR
8000 lb Axle	Fd	Meritor		7636 - D1032	MD769	NR	R4011729	NR	NR
	Fd	Meritor		7636 - D1032	MD769	NR	R4011729	NR	NR
11,000, 13,500 lb Axle	Rd	TRW		7914 - D1010	MD1010	NR	R4012072	NR	NR
13,500 lb Axle	Rd	TRW		7914 - D1064	MD1064	NR	-	NR	NR
15,000, 17,900, 19,000 lb Axle	Rd	Meritor		7636 - D1032	MD769	NR	R4011729	NR	NR
2003									
6000, 7000 lb Axle	Fd	TRW		7914 - D1010	MD1010	NR	R4012072	NR	NR
	Fd	TRW		7914 - D1010	MD1010	NR	R4012072	NR	NR
7,000 lb Axle	Fd	Meritor		7636 - D1032	MD769	NR	R4011729	NR	NR
	Fd	Meritor		7636 - D1032	MD769	NR	R4011729	NR	NR
8,000 lb Axle	Fd	Meritor		7636 - D1032	MD769	NR	R4011729	NR	NR
	Fd	Meritor		7636 - D1032	MD769	NR	R4011729	NR	NR
11,000, 13,500 lb Axle	Rd	TRW		7914 - D1010	MD1010	NR	R4012072	NR	NR
15,000, 17,900, 19,000 lb Axle	Rd	TRW		7914 - D1010	MD1010	NR	R4012072	NR	NR
C6500 TOPKICK, KODIAK - 22,000 lb. GVW									
2007									
8000 lb Axle	Fd	Meritor		7636 - D1032	MD769	NR	R4011729	NR	NR
10,000, 12,000 lb Axle	Fd	Meritor		7636 - D1032	MD769	NR	R4011729	NR	NR
15,000 lb Axle	Rd	Meritor		7636 - D1032	MD769	NR	R4011729	NR	NR
19,000 lb Axle	Rd	Meritor		7636 - D1032	MD769	NR	R4011729	NR	NR
21,000 lb Axle	Rd	Meritor		7636 - D1032	MD769	NR	R4011729	NR	NR
2006									
8000 lb Axle	Fd	Meritor		7636 - D1032	MD769	NR	R4011729	NR	NR
10,000, 12,000 lb Axle	Fd	Meritor		7636 - D1032	MD769	NR	R4011729	NR	NR
15,000 lb Axle	Rd	Meritor		7636 - D1032	MD769	NR	R4011729	NR	NR
19,000 lb Axle	Rd	Meritor		7636 - D1032	MD769	NR	R4011729	NR	NR
21,000 lb Axle	Rd	Meritor		7636 - D1032	MD769	NR	R4011729	NR	NR
2005									
8000 lb Axle	Fd	Meritor		7636 - D1032	MD769	NR	R4011729	NR	NR
10,000, 12,000 lb Axle	Fd	Meritor		7636 - D1032	MD769	NR	R4011729	NR	NR
15,000 lb Axle	Rd	Meritor		7636 - D1032	MD769	NR	R4011729	NR	NR
19,000 lb Axle	Rd	Meritor		7636 - D1032	MD769	NR	R4011729	NR	NR
21,000 lb Axle	Rd	Meritor		7636 - D1032	MD769	NR	R4011729	NR	NR
2004									
8000 lb Axle	Fd	Meritor		7636 - D1032	MD769	NR	R4011729	NR	NR
10,000, 12,000 lb Axle	Fd	Meritor		7636 - D1032	MD769	NR	R4011729	NR	NR
15,000 lb Axle	Rd	Meritor		7636 - D1032	MD769	NR	R4011729	NR	NR
19,000 lb Axle	Rd	Meritor		7636 - D1032	MD769	NR	R4011729	NR	NR
21,000 lb Axle	Rd	Meritor		7636 - D1032	MD769	NR	R4011729	NR	NR
2003									
8000 lb Axle	Fd	Meritor		7636 - D1032	MD769	NR	R4011729	NR	NR
10,000, 12,000 lb Axle	Fd	Meritor		7636 - D1032	MD769	NR	R4011729	NR	NR
15,000 lb Axle	Rd	Meritor		7636 - D1032	MD769	NR	R4011729	NR	NR
19,000 lb Axle	Rd	Meritor		7636 - D1032	MD769	NR	R4011729	NR	NR
21,000 lb Axle	Rd	Meritor		7636 - D1032	MD769	NR	R4011729	NR	NR
C7500 TOPKICK, KODIAK - 29,000 - 33,900 lb. GVW									
2005									
6,000 lb	Fd	TRW		7914 - D1010	MD1010	NR	R4012072	NR	NR
10,000 - 12,000 lb	Fd	Meritor		7636 - D1032	MD769	NR	R4011729	NR	NR
19,000 lb	Rd	TRW		7914 - D1010	MD1010	NR	R4012072	NR	NR
	Rd	TRW		7914 - D1010	MD1010	NR	R4012072	NR	NR
21,000 - 23,000 lb	Rd	Meritor		7636 - D1032	MD769	NR	R4011729	NR	NR
2004									
6,000 lb	Fd	TRW		7914 - D1010	MD1010	NR	R4012072	NR	NR
10,000 - 12,000 lb	Fd	Meritor		7636 - D1032	MD769	NR	R4011729	NR	NR
19,000 lb	Rd	TRW		7914 - D1010	MD1010	NR	R4012072	NR	NR
	Rd	TRW		7914 - D1010	MD1010	NR	R4012072	NR	NR
21,000 - 23,000 lb	Rd	Meritor		7636 - D1032	MD769	NR	R4011729	NR	NR

322 - With Aluminum Wheels
386 - 10 Hole Rear Rotor With Drum In Hat
389 - 8 Hole Rotor
363 - Piston includes Boots and Seals
387 - 10 Hole Rotor
392 - 5 Tapped Holes For ABS Mounting Ring
365 - Caliper Loaded with Hardware and Disc Pads
388 - 5 Hole Rotor

MERITOR DRUM OR ROTOR NO.	CALIPER OR CYLINDER BORE SIZE	MERITOR CALIPER OR WHEEL CYLINDER (LEFT)	MERITOR CALIPER OR WHEEL CYLINDER (RIGHT)	MERITOR CALIPER OR WHEEL CYLINDER REPAIR KIT	MERITOR CALIPER PISTON	MERITOR MASTER CYLINDER	MERITOR MASTER CYLINDER KIT	MERITOR BRAKE HOSE (LEFT)	MERITOR BRAKE HOSE (RIGHT)
									GMC / CHEV(Cont.)
									C5500 TOPKICK, KODIAK - 18,000 - 19,500 lb. GVW(Cont.)
R441712599[388]	64mm	60450473001	60450474001[365]	R4011731	R4011511	R413013812	-	-	-
R441713810[389]	64mm	60450473001	60450474001[365]	R4011731	R4011511	R413013812	-	-	-
23-123489-002[387]	64mm	60450473001	60450474001[365]	R4011731	R4011511	R413013812	-	-	-
R441712599[388]	66mm	R4212067	R4212067	R4012071	R4012070[363]	R413013812	-	-	-
R441713714[386]	66mm	R4212069	R4212069	-	-	R413013812	-	-	-
23-123489-002[387]	64mm	60450474001	60450473001[365]	R4011731	R4011511	R413013812	-	-	-
R441712599[388]	66mm	R4212067	R4212067	R4012071	R4012070[363]	R413013812	-	-	-
R441712599[388]	60mm	R4212068	R4212068	R4012074	R4012073[363]	R413013812	-	-	-
R441712599[388]	70mm	60450469002	60450468002[365]	R4011730	60050334	R413013812	-	-	-
R441712599[388]	64mm	60450473001	60450474001[365]	R4011731	R4011511	R413013812	-	-	-
R441712599[388]	64mm	60450473001	60450474001[365]	R4011731	R4011511	R413013812	-	-	-
R441712599[388]	70mm	60450469002	60450468002[365]	R4011730	60050334	R413013812	-	-	-
R441712599[388]	60mm	R4212068	R4212068	R4012074	R4012073[363]	R413013812	-	-	-
23-123489-002[387]	64mm	60450474001	60450473001[365]	R4011731	R4011511	R413013812	-	-	-
									C6500 TOPKICK, KODIAK - 22,000 lb. GVW
23-123489-002[322]	64mm	60450474001	60450473001[365]	R4011731	R4011511	R413013812	-	-	-
23-123489-002[322]	70mm	60450469002	60450468002[365]	R4011731	R4011511	R413013812	-	-	-
23-123489-002[322]	64mm	60450474001	60450473001[365]	R4011731	R4011511	R413013812	-	-	-
23-123489-002[322]	70mm	60450469002	60450468002[365]	R4011731	R4011511	R413013812	-	-	-
23-123574-004	70mm	60450469002	60450468002[365]	R4011731	R4011511	R413013812	-	-	-
23-123489-002[322]	64mm	60450474001	60450473001[365]	R4011731	R4011511	R413013812	-	-	-
23-123489-002[322]	70mm	60450469002	60450468002[365]	R4011731	R4011511	R413013812	-	-	-
23-123489-002[322]	64mm	60450474001	60450473001[365]	R4011731	R4011511	R413013812	-	-	-
23-123489-002[322]	70mm	60450469002	60450468002[365]	R4011731	R4011511	R413013812	-	-	-
23-123574-004	70mm	60450469002	60450468002[365]	R4011731	R4011511	R413013812	-	-	-
23-123489-002[322]	64mm	60450474001	60450473001[365]	R4011731	R4011511	R413013812	-	-	-
23-123489-002[322]	70mm	60450469002	60450468002[365]	R4011731	R4011511	R413013812	-	-	-
23-123489-002[322]	64mm	60450474001	60450473001[365]	R4011731	R4011511	R413013812	-	-	-
23-123489-002[322]	70mm	60450469002	60450468002[365]	R4011731	R4011511	R413013812	-	-	-
23-123574-004	70mm	60450469002	60450468002[365]	R4011731	R4011511	R413013812	-	-	-
23-123489-002[322]	64mm	60450474001	60450473001[365]	R4011731	R4011511	R413013812	-	-	-
23-123489-002[322]	70mm	60450469002	60450468002[365]	R4011731	R4011511	R413013812	-	-	-
23-123489-002[322]	64mm	60450474001	60450473001[365]	R4011731	R4011511	R413013812	-	-	-
23-123489-002[322]	70mm	60450469002	60450468002[365]	R4011731	R4011511	R413013812	-	-	-
23-123574-004	70mm	60450469002	60450468002[365]	R4011731	R4011511	R413013812	-	-	-
23-123489-002[322]	64mm	60450474001	60450473001[365]	R4011731	R4011511	R413013812	-	-	-
23-123489-002[322]	70mm	60450469002	60450468002[365]	R4011731	R4011511	R413013812	-	-	-
23-123489-002[322]	64mm	60450474001	60450473001[365]	R4011731	R4011511	R413013812	-	-	-
23-123489-002[322]	70mm	60450469002	60450468002[365]	R4011731	R4011511	R413013812	-	-	-
23-123574-004	70mm	60450469002	60450468002[365]	R4011731	R4011511	R413013812	-	-	-
									C7500 TOPKICK, KODIAK - 29,000 - 33,900 lb. GVW
23-123485-002[392]	66mm	R4212067	R4212067	R4012071	R4012070[363]	-	-	-	-
23-123485-002[392]	64mm	60450473001	60450474001[365]	R4011731	R4011511	-	-	-	-
23-123485-002[392]	60mm	R4212068	R4212068	R4012074	R4012073[363]	-	-	-	-
23-123485-002[392]	66mm	R4212069	R4212069	-	-	-	-	-	-
23-123485-002[392]	64mm	60450474001	60450473001[365]	R4011731	R4011511	-	-	-	-
23-123485-002[392]	66mm	R4212067	R4212067	R4012071	R4012070[363]	-	-	-	-
23-123485-002[392]	64mm	60450473001	60450474001[365]	R4011731	R4011511	-	-	-	-
23-123485-002[392]	60mm	R4212068	R4212068	R4012074	R4012073[363]	-	-	-	-
23-123485-002[392]	66mm	R4212069	R4212069	-	-	-	-	-	-
23-123485-002[392]	64mm	60450474001	60450473001[365]	R4011731	R4011511	-	-	-	-

MAKE MODEL YEAR AXLE CODE AXLE WEIGHT	AXLE & BRK. TYPE	BRK. MFG.	BRAKE SIZE	FMSI	MERITOR DISC PAD OR BRAKE SHOE	MERITOR GUIDE PIN OR RETURN SPRING KIT	MERITOR CALIPER HWD. KIT OR RETURN SPRING KIT	MERITOR ADJUSTER KIT (LEFT WHEEL)	MERITOR ADJUSTER KIT (RIGHT WHEEL)
GMC / CHEV(Cont.)									
C7500 TOPKICK, KODIAK - 29,000 - 33,900 lb. GVW(Cont.)									
2003 6,000 lb	Fd	TRW		7914 - D1010	MD1010	NR	R4012072	NR	NR
10,000 - 12,000 lb	Fd	Meritor		7636 - D1032	MD769	NR	R4011729	NR	NR
19,000 lb	Rd	TRW		7914 - D1010	MD1010	NR	R4012072	NR	NR
	Rd	TRW		7914 - D1010	MD1010	NR	R4012072	NR	NR
21,000 - 23,000 lb	Rd	Meritor		7636 - D1032	MD769	NR	R4011729	NR	NR
2002 6,000 lb	Fd	TRW		7914 - D1010	MD1010	NR	R4012072	NR	NR
	Fd	TRW		7914 - D1010	MD1010	NR	R4012072	NR	NR
10,000 - 12,000 lb	Fd	Meritor		7636 - D1032	MD769	NR	R4011729	NR	NR
19,000 lb	Rd	TRW		7914 - D1010	MD1010	NR	R4012072	NR	NR
	Rd	TRW		7914 - D1010	MD1010	NR	R4012072	NR	NR
21,000 - 23,000 lb	Rd	Meritor		7636 - D1032	MD769	NR	R4011729	NR	NR
G-2500 SERIES-3/4 TON VAN									
2005 Express, Savana	Rd	GM		7881 - D974	MVD974	NR	R4112464	NR	NR
Express, Savana 7,300 lb GVW	Fd	GM		7653 - D785	MVD785	NR	R40H5929	NR	NR
Express, Savana 8,600 lb GVW	Fd	GM		7652 - D784	MVD784	NR	R40H5931	NR	NR
2004 Express, Savana	Rd	GM		7881 - D974	MVD974	NR	R4112464	NR	NR
Express, Savana 7,300 lb GVW	Fd	GM		7653 - D785	MVD785	NR	R40H5929	NR	NR
Express, Savana 8,600 lb GVW	Fd	GM		7652 - D784	MVD784	NR	R40H5931	NR	NR
2003 Express, Savana	Rd	GM		7881 - D974	MVD974	NR	R4112464	NR	NR
Express, Savana 7,300 lb GVW	Fd	GM		7653 - D785	MVD785	NR	R40H5929	NR	NR
Express, Savana 8,600 lb GVW	Fd	GM		7652 - D784	MVD784	NR	R40H5931	NR	NR
2002 Express, Savana	Ra		13 " x 2-1/2 "	2042AT - 451	R46451	R40H378	R40H7055	R40H2588	R40H2589
	Ra	GM	13 " x 2-1/2 "	2042AT - 451	R46451	R40H378	R40H7055	R40H2588	R40H2589
Express, Savana w/ 7,7000 lb. & 8,600 lb. GVW	Fd	GM		7339 - D459	MD459	R40H5083	R40H5707	NR	NR
	Fd	GM		7339 - D459	MD459	R40H5083	R40H5707	NR	NR
2001 Express, Savana w/ 7,300 lb GVW	Fd	GM		7259 - D369	MD369	NR	R40H5594	NR	NR
	Ra	GM	11.171875 x 2-3/4 "	2073T - 473	R46473	R40H369	R40H4072DP[278]	R40H2586	R40H2587
Express, Savana w/ 7,7000 lb. & 8,600 lb. GVW	Fd	GM		7260 - D370	MD370	R40H5083	R40H5707	NR	NR
	Ra	GM	13 " x 2-1/2 "	2042AT - 451	R46451	R40H378	R40H7055	R40H2588	R40H2589
	Ra	GM	13 " x 3-1/2 "	2157T - 452	R46452	R40H378	R40H7055	R40H2588	R40H2589
Express, Savana 8,600 lb. GVW, 6.5 liter	Ra	GM	13 " x 3-1/2 "	2157T - 452	R46452	R40H378	R40H7055	R40H2588	R40H2589
2000 Express, Savana w/ 7,300 lb GVW	Fd	GM		7259 - D369	MD369	NR	R40H5594	NR	NR
	Ra	GM	11.171875 x 2-3/4 "	2073T - 473	R46473	R40H369	R40H4072DP[278]	R40H2586	R40H2587
Express, Savana w/ 7,7000 lb. & 8,600 lb. GVW	Fd	GM		7260 - D370	MD370	R40H5083	R40H5707	NR	NR
	Ra	GM	13 " x 2-1/2 "	2042AT - 451	R46451	R40H378	R40H7055	R40H2588	R40H2589
	Ra	GM	13 " x 3-1/2 "	2157T - 452	R46452	R40H378	R40H7055	R40H2588	R40H2589
Express, Savana 8,600 lb. GVW, 6.5 liter	Ra	GM	13 " x 3-1/2 "	2157T - 452	R46452	R40H378	R40H7055	R40H2588	R40H2589
1999 Express, Savana w/ 7,300 lb GVW	Fd	GM		7259 - D369	MD369	NR	R40H5594	NR	NR

278 - For Heavy Duty version use E-11287
291 - Except 9 1/2" Ring Gear
293 - With 9 1/2" Ring Gear and 6 3/8" Drum Width
332 - Power Brakes, Hydraulic Booster
334 - Power Brakes, Vacuum Booster
363 - Piston includes Boots and Seals
365 - Caliper Loaded with Hardware and Disc Pads
366 - 13" Dia Rotor - 8 Stud w/ 4.630" Dia CTR Pilot Hole
390 - Rotor and Hub One Piece Assembly With ABS Ring

MERITOR DRUM OR ROTOR NO.	CALIPER OR CYLINDER BORE SIZE	MERITOR CALIPER OR WHEEL CYLINDER (LEFT)	MERITOR CALIPER OR WHEEL CYLINDER (RIGHT)	MERITOR CALIPER OR WHEEL CYLINDER REPAIR KIT	MERITOR CALIPER PISTON	MERITOR MASTER CYLINDER	MERITOR MASTER CYLINDER KIT	MERITOR BRAKE HOSE (LEFT)	MERITOR BRAKE HOSE (RIGHT)
									GMC / CHEV(Cont.)
									C7500 TOPKICK, KODIAK - 29,000 - 33,900 lb. GVW(Cont.)
23-123485-002[392]	66mm	R4212067	R4212067	R4012071	R4012070[363]	-	-	-	-
23-123485-002[392]	64mm	60450473001	60450474001[365]	R4011731	R4011511	-	-	-	-
23-123485-002[392]	66mm	R4212067	R4212067	R4012071	R4012070[363]	-	-	-	-
23-123485-002[392]	60mm	R4212068	R4212068	R4012074	R4012073[363]	-	-	-	-
23-123485-002[392]	64mm	60450474001	60450473001[365]	R4011731	R4011511	-	-	-	-
23-123485-002[392]	66mm	R4212067	R4212067	R4012071	R4012070[363]	-	-	-	-
23-123485-002[392]	60mm	R4212068	R4212068	R4012074	R4012073[363]	-	-	-	-
23-123485-002[392]	64mm	60450473001	60450474001[365]	R4011731	R4011511	-	-	-	-
23-123485-002[392]	60mm	R4212068	R4212068	R4012074	R4012073[363]	-	-	-	-
23-123485-002[392]	66mm	R4212067	R4212067	R4012071	R4012070[363]	-	-	-	-
23-123485-002[392]	64mm	60450474001	60450473001[365]	R4011731	R4011511	-	-	-	-
									G-2500 SERIES-3/4 TON VAN
R44145262[366]		-	-	-	-	-	-	-	-
R44145259[405]		R42R55854	R42R55853	-	-	-	-	-	-
R44145261[405]	2-1/4 "	R42R55856	R42R55855	-	-	-	-	-	-
R44145262[366]		-	-	-	-	-	-	-	-
R44145259[405]		R42R55854	R42R55853	-	-	-	-	-	-
R44145261[405]	2-1/4 "	R42R55856	R42R55855	-	-	-	-	-	-
R44145262[366]		-	-	-	-	-	-	-	-
R44145259[405]		R42R55854	R42R55853	-	-	-	-	-	-
R44145261[405]	2-1/4 "	R42R55856	R42R55855	-	-	-	-	-	-
R44140449[293]	1-1/16 "	R4133709	R4133709	N/A	N/A	-	-	R4577765	R4577765
R44140449[293]	1-1/16 "	R4133709	R4133709	N/A	N/A	-	-	R4577765	R4577765
R44141818[390]	3-5/32 "	R42R55497	R42R55496	R4066330	R4090101S	-	-	R4578774	-
R44141818[390]	3-5/32 "	R42R55497	R42R55496	R4066330	R4090101S	-	-	R4578774	-
R44145107	2-15/16 "	R42R55501	R42R55500	R4066306	R4090087S	R4111266[334]	N/A	R4578774	R4578772
R44140543[291]	15/16	R4134102	R4134102	N/A	NR	-	-	R4577765	R4577765
R44141818[390]	3-5/32 "	R42R55497	R42R55496	R4066330	R4090101S	R4113543[332]	N/A	R4578438	R4578480
R44140449[293]	1-1/16 "	R4133709	R4133709	N/A	NR	-	-	R4577765	R4577765
R44140619	1-1/16 "	R4133709	R4133709	N/A	NR	-	-	R4577765	R4577765
R44140619	1-1/16 "	R4134037	R4134037	N/A	NR	-	-	R4577765	R4577765
R44145107	2-15/16 "	R42R55501	R42R55500	R4066306	R4090087S	R4111266[334]	N/A	R4578774	R4578772
R44140543[291]	15/16	R4134102	R4134102	N/A	NR	-	-	R4577765	R4577765
R44141818[390]	3-5/32 "	R42R55497	R42R55496	R4066330	R4090101S	R4113543[332]	N/A	R4578438	R4578480
R44140449[293]	1-1/16 "	R4133709	R4133709	N/A	NR	-	-	R4577765	R4577765
R44140619	1-1/16 "	R4133709	R4133709	N/A	NR	-	-	R4577765	R4577765
R44140619	1-1/16 "	R4134037	R4134037	N/A	NR	-	-	R4577765	R4577765
R44145107	2-15/16 "	R42R55501	R42R55500	R4066306	R4090087S	R4111266[334]	N/A	R4578774	R4578772

392 - 5 Tapped Holes For ABS Mounting Ring

405 - Rotor Only

MAKE MODEL YEAR AXLE CODE AXLE WEIGHT	AXLE & BRK. TYPE	BRK. MFG.	BRAKE SIZE	FMSI	MERITOR DISC PAD OR BRAKE SHOE	MERITOR GUIDE PIN OR RETURN SPRING KIT	MERITOR CALIPER HWD. KIT OR RETURN SPRING KIT	MERITOR ADJUSTER KIT (LEFT WHEEL)	MERITOR ADJUSTER KIT (RIGHT WHEEL)
GMC / CHEV(Cont.)									
G-2500 SERIES-3/4 TON VAN(Cont.)									
1999 Express, Savana w/ 7,300 lb GVW	Ra	GM	11-5/32" x 2-3/4 "	2073T - 473	R46473	R40H369	R40H4072DP[278]	R40H2586	R40H2587
Express, Savana w/ 7,7000 lb. & 8,600 lb. GVW	Fd	GM		7260 - D370	MD370	R40H5083	R40H5707	NR	NR
	Ra	GM	13 " x 2-1/2 "	2042AT - 451	R46451	R40H378	R40H7055	R40H2588	R40H2589
	Ra	GM	13 " x 3-1/2 "	2157T - 452	R46452	R40H378	R40H7055	R40H2588	R40H2589
Express, Savana 8,600 lb. GVW, 6.5 liter	Ra	GM	13 " x 3-1/2 "	2157T - 452	R46452	R40H378	R40H7055	R40H2588	R40H2589
G-2500,2600 SERIES-3/4 TON VAN									
1998 Express, Savana	Fd	GM		7259 - D369	MD369	R40H5083	R40H5707	NR	NR
	Ra	GM	11-5/32 " x 2-3/4 "	2073AT - S653	R46473	R40H369	R40H4072DP[278]	R40H2586	R40H2587
1997	Fd	GM		7259 - D369	MD369	R40H5083	R40H5707	NR	NR
	Ra	GM	11-5/32 " x 2-3/4 "	2073AT - S653	R46473	R40H369	R40H4072DP[278]	R40H2586	R40H2587
1996	Fd	GM		7259 - D369	MD369	R40H5083	R40H5707	NR	NR
	Ra	GM	11-5/32 " x 2-3/4 "	2073AT - S653	R46473	R40H369	R40H4072DP[278]	R40H2586	R40H2587
1995	Ra	GM	11-5/32" x 2-3/4 "	2073TT - 473	R46473	R40H369	R40H4072DP[278]	R40H2586	R40H2587
Diesel Engine	Fd	GM		728A - D52	MD52	R40H5004DP	R40H5500	NR	NR
Gasoline Engine	Fd	GM		728A - D52	MD52	R40H5004DP	R40H5500	NR	NR
1994	Ra	GM	11-5/32" x 2-3/4 "	2073TT - 473	R46473	R40H369	R40H4072DP[278]	R40H2586	R40H2587
Diesel Engine	Fd	GM		728A - D52	MD52	R40H5004DP	R40H5500	NR	NR
Gasoline Engine	Fd	GM		728A - D52	MD52	R40H5004DP	R40H5500	NR	NR
1993	Ra	GM	11-5/32" x 2-3/4 "	2073TT - 473	R46473	R40H369	R40H4072DP[278]	R40H2586	R40H2587
Diesel Engine	Fd	GM		728A - D52	MD52	R40H5004DP	R40H5500	NR	NR
Gasoline Engine	Fd	GM		728A - D52	MD52	R40H5004DP	R40H5500	NR	NR
1992	Ra	GM	11-5/32" x 2-3/4 "	2073TT - 473	R46473	R40H369	R40H4072DP[278]	R40H2586	R40H2587
Diesel Engine	Fd	GM		728A - D52	MD52	R40H5004DP	R40H5500	NR	NR
Gasoline Engine	Fd	GM		728A - D52	MD52	R40H5004DP	R40H5500	NR	NR
1991	Ra	GM	11-5/32" x 2-3/4 "	2073TT - 473	R46473	R40H369	R40H4072DP[278]	R40H2586	R40H2587
Diesel Engine	Fd	GM		728A - D52	MD52	R40H5004DP	R40H5500	NR	NR
Gasoline Engine	Fd	GM		728A - D52	MD52	R40H5004DP	R40H5500	NR	NR
1990	Ra	GM	11-5/32" x 2-3/4 "	2073TT - 473	R46473	R40H369	R40H4072DP[278]	R40H2586	R40H2587
Diesel Engine	Fd	GM		728A - D52	MD52	R40H5004DP	R40H5500	NR	NR
Gasoline Engine	Fd	GM		728A - D52	MD52	R40H5004DP	R40H5500	NR	NR
1989	Ra	GM	11-5/32" x 2-3/4 "	2073TT - 473	R46473	R40H369	R40H4072DP[278]	R40H2586	R40H2587
Diesel Engine	Fd	GM		728A - D52	MD52	R40H5004DP	R40H5500	NR	NR
Gasoline Engine	Fd	GM		728A - D52	MD52	R40H5004DP	R40H5500	NR	NR
1988	Ra	GM	11-5/32" x 2-3/4 "	2073TT - 473	R46473	R40H369	R40H4072DP[278]	R40H2586	R40H2587
	Ra	GM	11-5/32" x 2-3/4 "	2073TT - 473	R46473	R40H369	R40H4072DP[278]	R40H2586	R40H2587
Diesel Engine	Fd	GM		728A - D52	MD52	R40H5004DP	R40H5500	NR	NR
Gasoline Engine	Fd	GM		728A - D52	MD52	R40H5004DP	R40H5500	NR	NR
1987	Ra	GM	11-5/32" x 2-3/4 "	2073TT - 473	R46473	R40H369	R40H4072DP[278]	R40H2586	R40H2587
	Ra	GM	11-5/32" x 2-3/4 "	2073TT - 473	R46473	R40H369	R40H4072DP[278]	R40H2586	R40H2587
Diesel Engine	Fd	GM		728A - D52	MD52	R40H5004DP	R40H5500	NR	NR
Gasoline Engine	Fd	GM		728A - D52	MD52	R40H5004DP	R40H5500	NR	NR
1986	Ra	GM	11-5/32" x 2-3/4 "	2073TT - 473	R46473	R40H369	R40H4072DP[278]	R40H2586	R40H2587

53 - Power Brakes
278 - For Heavy Duty version use E-11287
291 - Except 9 1/2" Ring Gear
293 - With 9 1/2" Ring Gear and 6 3/8" Drum Width
303 - Power Brakes, Except Export
332 - Power Brakes, Hydraulic Booster
334 - Power Brakes, Vacuum Booster
381 - Rotor and Hub One Piece Assembly W/O ABS Ring
390 - Rotor and Hub One Piece Assembly With ABS Ring

MERITOR DRUM OR ROTOR NO.	CALIPER OR CYLINDER BORE SIZE	MERITOR CALIPER OR WHEEL CYLINDER (LEFT)	MERITOR CALIPER OR WHEEL CYLINDER (RIGHT)	MERITOR CALIPER OR WHEEL CYLINDER REPAIR KIT	MERITOR CALIPER PISTON	MERITOR MASTER CYLINDER	MERITOR MASTER CYLINDER KIT	MERITOR BRAKE HOSE (LEFT)	MERITOR BRAKE HOSE (RIGHT)
									GMC / CHEV(Cont.)
									G-2500 SERIES-3/4 TON VAN(Cont.)
R44140543[291]	15/16	R4134102	R4134102	N/A	NR	-	-	R4577765	R4577765
R44141818[390]	3-5/32 "	R42R55497	R42R55496	R4066330	R4090101S	R4113543[332]	N/A	R4578438	R4578480
R44140449[293]	1-1/16 "	R4133709	R4133709	N/A	NR	-	-	R4577765	R4577765
R44140619	1-1/16 "	R4133709	R4133709	N/A	NR	-	-	R4577765	R4577765
R44140619	1-1/16 "	R4134037	R4134037	N/A	NR	-	-	R4577765	R4577765
									G-2500,2600 SERIES-3/4 TON VAN
R44141829[390]	2-15/16 "	R42R55501	R42R55500	R4066306	R4090087S	R4111266[334]	N/A	R4578438	R451667
R44140622	15/16	R4134102	R4134102	N/A	NR	-	-	R4577765	R4577765
R44141829[390]	2-15/16 "	R42R55501	R42R55500	R4066306	R4090087S	R4111266	N/A	R4578438	R451667
R44140622	15/16	R4134102	R4134102	N/A	NR	-	-	R4577765	R4577765
R44141829[390]	2-15/16 "	R42R55501	R42R55500	R4066306	R4090087S	R4111266	N/A	R4578438	R451667
R44140622	15/16	R4134102	R4134102	N/A	NR	-	-	R4577765	R4577765
R44140604	15/16 "	R4133469	R4133469	R4166852	NR	-	-	R4577010	R4577010
R44141391[381]	2-15/16 "	R42R55208	R42R55207	R4066848	R4090013S	R4112058[53]	R4122202	R4577417	R4577418
R44141043[381]	2-15/16 "	R42R55208	R42R55207	R4066848	R4090013S	R4111863[303]	N/A	R4577417	R4577418
R44140604	15/16 "	R4133469	R4133469	R4166852	NR	-	-	R4577010	R4577010
R44141391[381]	2-15/16 "	R42R55208	R42R55207	R4066848	R4090013S	R4112058[53]	R4122202	R4577417	R4577418
R44141043[381]	2-15/16 "	R42R55208	R42R55207	R4066848	R4090013S	R4111863[303]	N/A	R4577417	R4577418
R44140604	15/16 "	R4133469	R4133469	R4166852	NR	-	-	R4577010	R4577010
R44141391[381]	2-15/16 "	R42R55208	R42R55207	R4066848	R4090013S	R4112058[53]	R4122202	R4577417	R4577418
R44141043[381]	2-15/16 "	R42R55208	R42R55207	R4066848	R4090013S	R4111863[303]	N/A	R4577417	R4577418
R44140604	15/16 "	R4133469	R4133469	R4166852	NR	-	-	R4577010	R4577010
R44141391[381]	2-15/16 "	R42R55208	R42R55207	R4066848	R4090013S	R4112058[53]	R4122202	R4577417	R4577418
R44141043[381]	2-15/16 "	R42R55208	R42R55207	R4066848	R4090013S	R4111863[303]	N/A	R4577417	R4577418
R44140604	15/16 "	R4133469	R4133469	R4166852	NR	-	-	R4577010	R4577010
R44141391[381]	2-15/16 "	R42R55208	R42R55207	R4066848	R4090013S	R4112058[53]	R4122202	R4577417	R4577418
R44141043[381]	2-15/16 "	R42R55208	R42R55207	R4066848	R4090013S	R4111863[303]	N/A	R4577417	R4577418
R44140604	15/16 "	R4133469	R4133469	R4166852	NR	-	-	R4577010	R4577010
R44141391[381]	2-15/16 "	R42R55208	R42R55207	R4066848	R4090013S	R4112058[53]	R4122202	R4577417	R4577418
R44141043[381]	2-15/16 "	R42R55208	R42R55207	R4066848	R4090013S	R4111863[303]	N/A	R4577417	R4577418
R44140316	15/16 "	R4133469	R4133469	R4166852	NR	-	-	R4577010	R4577010
R44140604	15/16 "	R4133469	R4133469	R4166852	NR	-	-	R4577010	R4577010
R44141391[381]	2-15/16 "	R42R55208	R42R55207	R4066848	R4090013S	R4112058[53]	R4122202	R4577417	R4577418
R44141043[381]	2-15/16 "	R42R55208	R42R55207	R4066848	R4090013S	R4111863[303]	N/A	R4577417	R4577418
R44140316	15/16 "	R4133469	R4133469	R4166852	NR	-	-	R4577010	R4577010
R44140316	15/16 "	R4133469	R4133469	R4166852	NR	-	-	-	-
R44141391[381]	2-15/16 "	R42R55208	R42R55207	R4066848	R4090013S	R4112058[53]	R4122202	R4577417	R4577418
R44141043[381]	2-15/16 "	R42R55208	R42R55207	R4066848	R4090013S	R4111863[303]	N/A	R4577417	R4577418
R44140316	15/16 "	R4133469	R4133469	R4166852	NR	-	-	R4577010	R4577010

MAKE MODEL YEAR AXLE CODE AXLE WEIGHT	AXLE & BRK. TYPE	BRK. MFG.	BRAKE SIZE	FMSI	MERITOR DISC PAD OR BRAKE SHOE	MERITOR GUIDE PIN OR RETURN SPRING KIT	MERITOR CALIPER HWD. KIT OR RETURN SPRING KIT	MERITOR ADJUSTER KIT (LEFT WHEEL)	MERITOR ADJUSTER KIT (RIGHT WHEEL)
GMC / CHEV(Cont.)									
G-2500,2600 SERIES-3/4 TON VAN(Cont.)									
1986									
Diesel Engine	Fd	GM		728A - D52	MD52	R40H5004DP	R40H5500	NR	NR
Gasoline Engine	Fd	GM		728A - D52	MD52	R40H5004DP	R40H5500	NR	NR
1985									
	Ra	GM	11-5/32" x 2-3/4 "	2073TT - 473	R46473	R40H369	R40H4072DP[278]	R40H2586	R40H2587
Diesel Engine	Fd	GM		728A - D52	MD52	R40H5004DP	R40H5500	NR	NR
Gasoline Engine	Fd	GM		728A - D52	MD52	R40H5004DP	R40H5500	NR	NR
1984									
	Ra	GM	11-5/32" x 2-3/4 "	2073TT - 473	R46473	R40H369	R40H4072DP[278]	R40H2586	R40H2587
Diesel Engine	Fd	GM		728A - D52	MD52	R40H5004DP	R40H5500	NR	NR
Gasoline Engine	Fd	GM		728A - D52	MD52	R40H5004DP	R40H5500	NR	NR
	Fd	GM		728A - D52	MD52	R40H5004DP	R40H5500	NR	NR
1983									
	Ra	GM	11-5/32" x 2-3/4 "	2073TT - 473	R46473	R40H369	R40H4072DP[278]	R40H2586	R40H2587
Diesel Engine	Fd	GM		728A - D52	MD52	R40H5004DP	R40H5500	NR	NR
Gasoline Engine	Fd	GM		728A - D52	MD52	R40H5004DP	R40H5500	NR	NR
	Fd	GM		728A - D52	MD52	R40H5004DP	R40H5500	NR	NR
1982									
	Fd	GM		728A - D52	MD52	R40H5004DP	R40H5500	NR	NR
	Fd	GM		728A - D52	MD52	R40H5004DP	R40H5500	NR	NR
	Ra	GM	11-5/32" x 2-3/4 "	2073TT - 473	R46473	R40H369	R40H4072DP[278]	R40H2586	R40H2587
1981									
	Fd	GM		728A - D52	MD52	R40H5004DP	R40H5500	NR	NR
	Fd	GM		728A - D52	MD52	R40H5004DP	R40H5500	NR	NR
	Ra	GM	11-5/32" x 2-3/4 "	2073TT - 473	R46473	R40H369	R40H4072DP[278]	R40H2586	R40H2587
1980									
	Fd	GM		728A - D52	MD52	R40H5004DP	R40H5500	NR	NR
	Fd	GM		728A - D52	MD52	R40H5004DP	R40H5500	NR	NR
	Ra	GM	11-5/32" x 2-3/4 "	2073TT - 473	R46473	R40H369	R40H4072DP[278]	R40H2586	R40H2587
1979									
	Fd	GM		728A - D52	MD52	R40H5004DP	R40H5500	NR	NR
	Fd	GM		728A - D52	MD52	R40H5004DP	R40H5500	NR	NR
	Ra	GM	11-5/32" x 2-3/4 "	2073TT - 473	R46473	R40H369	R40H4072DP[278]	R40H2586	R40H2587
1978									
	Fd	GM		728A - D52	MD52	R40H5004DP	R40H5500	NR	NR
	Fd	GM		728A - D52	MD52	R40H5004DP	R40H5500	NR	NR
	Ra	GM	11-5/32" x 2-3/4 "	2073TT - 473	R46473	R40H369	R40H4072DP[278]	R40H2586	R40H2587
1977									
	Fd	GM		728A - D52	MD52	R40H5004DP	R40H5500	NR	NR
	Fd	GM		728A - D52	MD52	R40H5004DP	R40H5500	NR	NR
	Ra	GM	11-5/32" x 2-3/4 "	2073TT - 473	R46473	R40H369	R40H4072DP[278]	R40H2586	R40H2587
1976									
	Fd	GM		728A - D52	MD52	R40H5004DP	R40H5500	NR	NR
	Fd	GM		728A - D52	MD52	R40H5004DP	R40H5500	NR	NR
	Ra	GM	11-5/32" x 2-3/4 "	2073TT - 473	R46473	R40H369	R40H4072DP[278]	R40H2586	R40H2587
1975									
	Fd	GM		728A - D52	MD52	R40H5004DP	R40H5500	NR	NR
	Fd	GM		728A - D52	MD52	R40H5004DP	R40H5500	NR	NR
	Ra	GM	11-5/32" x 2-3/4 "	2073TT - 473	R46473	R40H369	R40H4072DP[278]	R40H2586	R40H2587
1974									
	Fd	GM		728A - D52	MD52	R40H5004DP	R40H5500	NR	NR
	Fd	GM		728A - D52	MD52	R40H5004DP	R40H5500	NR	NR
	Ra	GM	11-5/32" x 2-3/4 "	2073TT - 473	R46473	R40H369	R40H4072DP[278]	R40H2586	R40H2587
G-3500, SERIES-1 TON VAN									
2005 Express, Savana Dual Rear Wheels	Rd	GM		7891 - D989	MD989	R40H15087	NR	NR	NR
Express, Savana Dual Rear Wheels or Over 9,600 lb GVW	Fd	GM		7652 - D784	MD784	R40H15086	R40H5931	NR	NR
Express, Savana 8,600 lb. & 9,600 lb GVW	Fd	GM		7652 - D784	MD784	R40H15086	R40H5931	NR	NR
Express, Savana 8,600 lb., 9,600 lb. or over 9,600 lb GVW w/ SWR	Rd	GM		7881 - D974	MD974	R40H15087	NR	NR	NR

53 - Power Brakes
278 - For Heavy Duty version use E-11287
303 - Power Brakes, Except Export
367 - 13" Dia Rotor - 8 Stud w/ 4.873" Dia CTR Pilot Hole
381 - Rotor and Hub One Piece Assembly W/O ABS Ring
405 - Rotor Only

MERITOR DRUM OR ROTOR NO.	CALIPER OR CYLINDER BORE SIZE	MERITOR CALIPER OR WHEEL CYLINDER (LEFT)	MERITOR CALIPER OR WHEEL CYLINDER (RIGHT)	MERITOR CALIPER OR WHEEL CYLINDER REPAIR KIT	MERITOR CALIPER PISTON	MERITOR MASTER CYLINDER	MERITOR MASTER CYLINDER KIT	MERITOR BRAKE HOSE (LEFT)	MERITOR BRAKE HOSE (RIGHT)
									GMC / CHEV(Cont.)
									G-2500,2600 SERIES-3/4 TON VAN(Cont.)
R44141391[381]	2-15/16 "	R42R55208	R42R55207	R4066848	R4090013S	R4112058[53]	R4122202	R4577417	R4577418
R44141043[381]	2-15/16 "	R42R55208	R42R55207	R4066848	R4090013S	R4111863[303]	N/A	R4577417	R4577418
R44140316	15/16 "	R4133469	R4133469	R4166852	NR	-	-	R4577010	R4577010
R44141391[381]	2-15/16 "	R42R55208	R42R55207	R4066848	R4090013S	R4112058[53]	R4122202	R4577417	R4577418
R44141043[381]	2-15/16 "	R42R55208	R42R55207	R4066848	R4090013S	R4111863[303]	N/A	R4577417	R4577418
R44140316	15/16 "	R4133469	R4133469	R4166852	NR	-	-	R4577010	R4577010
R44141391[381]	2-15/16 "	R42R55208	R42R55207	R4066848	R4090013S	R4111863[303]	N/A	R4577417	R4577418
R44141043[381]	2-15/16 "	R42R55208	R42R55207	R4066848	R4090013S	R4111865[53]	R4122381	R4577417	R4577418
R44141043[381]	2-15/16 "	R42R55208	R42R55207	R4066848	R4090013S	N/A[53]	N/A	R4577417	R4577418
R44140316	15/16 "	R4133469	R4133469	R4166852	NR	-	-	R4577010	R4577010
R44141391[381]	2-15/16 "	R42R55208	R42R55207	R4066848	R4090013S	R4111863[303]	N/A	R4577417	R4577418
R44141043[381]	2-15/16 "	R42R55208	R42R55207	R4066848	R4090013S	R4111865[53]	R4122381	R4577417	R4577418
R44141043[381]	2-15/16 "	R42R55208	R42R55207	R4066848	R4090013S	N/A[53]	N/A	R4577417	R4577418
R44141043[381]	2-15/16 "	R42R55208	R42R55207	R4066848	R4090013S	R4111865[53]	R4122381	R4577321	R4577187
R44141043[381]	2-15/16 "	R42R55208	R42R55207	R4066848	R4090013S	R4111865[53]	R4122381	R4577320	R4577421
R44140316	15/16 "	R4133469	R4133469	R4166852	NR	-	-	R4577010	R4577010
R44141043[381]	2-15/16 "	R42R55208	R42R55207	R4066848	R4090013S	R4111865[53]	R4122381	R4577321	R4577187
R44141043[381]	2-15/16 "	R42R55208	R42R55207	R4066848	R4090013S	R4111865[53]	R4122381	R4577320	R4577421
R44140316	15/16 "	R4133469	R4133469	R4166852	NR	-	-	R4577010	R4577010
R44141043[381]	2-15/16 "	R42R55208	R42R55207	R4066848	R4090013S	R4112121[53]	R4122643	R4577320	R4577421
R44141043[381]	2-15/16 "	R42R55208	R42R55207	R4066848	R4090013S	R4112121[53]	R4122643	R4577321	R4577187
R44140316	15/16 "	R4133469	R4133469	R4166852	NR	-	-	R4577010	R4577010
R44141043[381]	2-15/16 "	R42R55208	R42R55207	R4066848	R4090013S	R4112121[53]	R4122643	R4577321	R4577187
R44141043[381]	2-15/16 "	R42R55208	R42R55207	R4066848	R4090013S	R4112121[53]	R4122643	R4577320	R4577421
R44140316	15/16 "	R4133469	R4133469	R4166852	NR	-	-	R4577010	R4577010
R44141043[381]	2-15/16 "	R42R55208	R42R55207	R4066848	R4090013S	R4112121[53]	R4122643	R4577321	R4577187
R44141043[381]	2-15/16 "	R42R55208	R42R55207	R4066848	R4090013S	R4112121[53]	R4122643	R4577320	R4577421
R44140316	15/16 "	R4133469	R4133469	R4166852	NR	-	-	R4577010	R4577010
R44141043[381]	2-15/16 "	R42R55208	R42R55207	R4066848	R4090013S	R4112121[53]	R4122643	R4577320	R4577421
R44141043[381]	2-15/16 "	R42R55208	R42R55207	R4066848	R4090013S	R4112121[53]	R4122643	R4577321	R4577187
R44140316	15/16 "	R4133469	R4133469	R4166852	NR	-	-	R4577010	R4577010
R44141043[381]	2-15/16 "	R42R55208	R42R55207	R4066848	R4090013S	R4112121[53]	R4122643	R4577320	R4577421
R44141043[381]	2-15/16 "	R42R55208	R42R55207	R4066848	R4090013S	R4112121[53]	R4122643	R4577321	R4577187
R44140316	15/16 "	R4133469	R4133469	R4166852	NR	-	-	R4577010	R4577010
R44141043[381]	2-15/16 "	R42R55208	R42R55207	R4066848	R4090013S	R4112121[53]	R4122643	R4577321	R4577187
R44141043[381]	2-15/16 "	R42R55208	R42R55207	R4066848	R4090013S	R4112121[53]	R4122643	R4577320	R4577421
R44140316	15/16 "	R4133469	R4133469	R4166852	NR	-	-	R4577010	R4577010
									G-3500, SERIES-1 TON VAN
R44145339[405]		R42R55995	R42R55994	-	-	-	-	-	-
R44145317[405]		R42R55944	R42R55943	-	-	-	-	-	-
R44145316		R42R55856	R42R55855	-	-	-	-	-	-
R44145260[367]		R42R55995	R42R55994	-	-	-	-	-	-

MAKE MODEL YEAR AXLE CODE AXLE WEIGHT	AXLE & BRK. TYPE	BRK. MFG.	BRAKE SIZE	FMSI	MERITOR DISC PAD OR BRAKE SHOE	MERITOR GUIDE PIN OR RETURN SPRING KIT	MERITOR CALIPER HWD. KIT OR RETURN SPRING KIT	MERITOR ADJUSTER KIT (LEFT WHEEL)	MERITOR ADJUSTER KIT (RIGHT WHEEL)
GMC / CHEV(Cont.)									
G-3500, SERIES-1 TON VAN(Cont.)									
2004 Express, Savana Dual Rear Wheels	Rd	GM		7891 - D989	MD989	R40H15087	NR	NR	NR
Express, Savana Dual Rear Wheels or Over 9,600 lb GVW	Fd	GM		7652 - D784	MD784	R40H15086	R40H5931	NR	NR
Express, Savana 8,600 lb. & 9,600 lb GVW	Fd	GM		7652 - D784	MD784	R40H15086	R40H5931	NR	NR
Express, Savana 8,600 lb., 9,600 lb. or over 9,600 lb GVW w/ SWR	Rd	GM		7881 - D974	MD974	R40H15087	NR	NR	NR
2003 Express, Savana Dual Rear Wheels	Rd	GM		7891 - D989	MD989	R40H15087	NR	NR	NR
Express, Savana Dual Rear Wheels or Over 9,600 lb GVW	Fd	GM		7652 - D784	MD784	R40H15086	R40H5931	NR	NR
Express, Savana 8,600 lb. & 9,600 lb GVW	Fd	GM		7652 - D784	MD784	R40H15086	R40H5931	NR	NR
Express, Savana 8,600 lb., 9,600 lb. or over 9,600 lb GVW w/ SWR	Rd	GM		7881 - D974	MD974	R40H15087	NR	NR	NR
2002 Express, Savana DRW	Fd	GM		7339 - D459	MD459	R40H5083	R40H5788	NR	NR
	Ra	GM	13 " x 3-1/2 "	2157T - 452	R46452	R40H378	R40H7055	R40H2588	R40H2589
Express, Savana SRW	Ra	GM	13 " x 3-1/2 "	2157T - 452	R46452	R40H378	R40H7055	R40H2588	R40H2589
Express, Savana w/ 32.77mm thick rotor SRW	Fd	GM		7339 - D459	MD459	R40H5083	R40H5788	NR	NR
Express, Savana w/ 39.1mm thick rotor SRW	Fd	GM		7339 - D459	MD459	R40H5083	R40H5788	NR	NR
2001 Express, Savana DRW	Fd	GM		7339 - D459	MD459	R40H5083	R40H5788	NR	NR
	Ra	GM	13 " x 3-1/2 "	2157T - 452	R46452	R40H378	R40H7055	R40H2588	R40H2589
Express, Savana SRW	Ra	GM	13 " x 3-1/2 "	2157T - 452	R46452	R40H378	R40H7055	R40H2588	R40H2589
Express, Savana w/ 32.77mm thick rotor SRW	Fd	GM		7339 - D459	MD459	R40H5083	R40H5788	NR	NR
Express, Savana w/ 39.1mm thick rotor SRW	Fd	GM		7339 - D459	MD459	R40H5083	R40H5788	NR	NR
2000 Express, Savana DRW	Fd	GM		7339 - D459	MD459	R40H5083	R40H5788	NR	NR
	Ra	GM	13 " x 3-1/2 "	2157T - 452	R46452	R40H378	R40H7055	R40H2588	R40H2589
Express, Savana SRW	Ra	GM	13 " x 3-1/2 "	2157T - 452	R46452	R40H378	R40H7055	R40H2588	R40H2589
Express, Savana w/ 32.77mm thick rotor SRW	Fd	GM		7339 - D459	MD459	R40H5083	R40H5788	NR	NR
Express, Savana w/ 39.1mm thick rotor SRW	Fd	GM		7339 - D459	MD459	R40H5083	R40H5788	NR	NR
1999 Express, Savana DRW	Fd	GM		7339 - D459	MD459	R40H5083	R40H5788	NR	NR
	Ra	GM	13 " x 3-1/2 "	2157T - 452	R46452	R40H378	R40H7055	R40H2588	R40H2589
Express, Savana SRW	Ra	GM	13 " x 3-1/2 "	2157T - 452	R46452	R40H378	R40H7055	R40H2588	R40H2589

280 - 10 1/2" Ring Gear
332 - Power Brakes, Hydraulic Booster
367 - 13" Dia Rotor - 8 Stud w/ 4.873" Dia CTR Pilot Hole
390 - Rotor and Hub One Piece Assembly With ABS Ring
394 - 8 Stud Rotor and Hub one piece Assembly
405 - Rotor Only

MERITOR DRUM OR ROTOR NO.	CALIPER OR CYLINDER BORE SIZE	MERITOR CALIPER OR WHEEL CYLINDER (LEFT)	MERITOR CALIPER OR WHEEL CYLINDER (RIGHT)	MERITOR CALIPER OR WHEEL CYLINDER REPAIR KIT	MERITOR CALIPER PISTON	MERITOR MASTER CYLINDER	MERITOR MASTER CYLINDER KIT	MERITOR BRAKE HOSE (LEFT)	MERITOR BRAKE HOSE (RIGHT)
GMC / CHEV(Cont.)									
G-3500, SERIES-1 TON VAN(Cont.)									
R44145339[405]		R42R55995	R42R55994	-	-	-	-	-	-
R44145317[405]		R42R55944	R42R55943	-	-	-	-	-	-
R44145316		R42R55856	R42R55855	-	-	-	-	-	-
R44145260[367]		R42R55995	R42R55994	-	-	-	-	-	-
R44145339[405]		R42R55995	R42R55994	-	-	-	-	-	-
R44145317[405]		R42R55944	R42R55943	-	-	-	-	-	-
R44145316		R42R55856	R42R55855	-	-	-	-	-	-
R44145260[367]		R42R55995	R42R55994	-	-	-	-	-	-
R44145134[394]		R42R55688	R42R55687	-	-	R4113543[332]	-	-	-
R44140388[280]	1-3/16 "	R4133708	R4133708	R4166872	NR	-	-	-	-
R44140619	1 "	R4134037	R4134037	R4133891	NR	-	-	R4577765	R4577765
R44141818[390]		R42R55688	R42R55687	-	-	R4113543[332]	N/A	R4578774	R4578772
R44145360		R42R55688	R42R55687	-	-	R4113543[332]	N/A	R4578774	R4578772
R44145134[394]		R42R55688	R42R55687	-	-	R4113543[332]	-	-	-
R44140388[280]	1-3/16 "	R4133708	R4133708	R4166872	NR	-	-	-	-
R44140619	1 "	R4134037	R4134037	R4133891	NR	-	-	R4577765	R4577765
R44141818[390]		R42R55688	R42R55687	-	-	R4113543[332]	N/A	R4578774	R4578772
R44145360		R42R55688	R42R55687	-	-	R4113543[332]	N/A	R4578774	R4578772
R44145134[394]		R42R55688	R42R55687	-	-	R4113543[332]	-	-	-
R44140388[280]	1-3/16 "	R4133708	R4133708	R4166872	NR	-	-	-	-
R44140619	1 "	R4134037	R4134037	R4133891	NR	-	-	R4577765	R4577765
R44141818[390]		R42R55688	R42R55687	-	-	R4113543[332]	N/A	R4578774	R4578772
R44145360		R42R55688	R42R55687	-	-	R4113543[332]	N/A	R4578774	R4578772
R44145134[394]		R42R55688	R42R55687	-	-	R4113543[332]	-	-	-
R44140388[280]	1-3/16 "	R4133708	R4133708	R4166872	NR	-	-	-	-
R44140619	1 "	R4134037	R4134037	R4133891	NR	-	-	R4577765	R4577765

MAKE MODEL YEAR AXLE CODE AXLE WEIGHT	AXLE & BRK. TYPE	BRK. MFG.	BRAKE SIZE	FMSI	MERITOR DISC PAD OR BRAKE SHOE	MERITOR GUIDE PIN OR RETURN SPRING KIT	MERITOR CALIPER HWD. KIT OR RETURN SPRING KIT	MERITOR ADJUSTER KIT (LEFT WHEEL)	MERITOR ADJUSTER KIT (RIGHT WHEEL)
GMC / CHEV(Cont.)									
G-3500, SERIES-1 TON VAN(Cont.)									
1999 Express, Savana w/ 32.77mm thick rotor SRW	Fd	GM		7339 - D459	MD459	R40H5083	R40H5788	NR	NR
Express, Savana w/ 39.1mm thick rotor SRW	Fd	GM		7339 - D459	MD459	R40H5083	R40H5788	NR	NR
G-3500,3600 SERIES-1 TON VAN									
1998 Express, Savana	Fd	GM		7259 - D369	MD369	R40H5083	R40H5707	NR	NR
	Fd	GM		7260 - D370	MD370	R40H5083	R40H5707	NR	NR
	Ra	GM	11-5/32 " x 2-3/4 "	2073AT - S653	R46473	R40H369	R40H4072DP[278]	R40H2586	R40H2587
	Ra	GM	13 " x 2-1/2 "	2042T - S655	R46451	R40H378	R40H7055	R40H2588	R40H2589
	Ra	GM	13 " x 3-1/2 "	2157T - S656	R46452	R40H378	R40H7055	R40H2588	R40H2589
1997									
	Fd	GM		7259 - D369	MD369	R40H5083	R40H5707	NR	NR
	Fd	GM		7260 - D370	MD370	R40H5083	R40H5707	NR	NR
	Ra	GM	11-5/32 " x 2-3/4 "	2073AT - S653	R46473	R40H369	R40H4072DP[278]	R40H2586	R40H2587
	Ra	GM	13 " x 2-1/2 "	2042T - S655	R46451	R40H378	R40H7055	R40H2588	R40H2589
	Ra	GM	13 " x 3-1/2 "	2157T - S656	R46452	R40H378	R40H7055	R40H2588	R40H2589
1996									
	Fd	GM		7259 - D369	MD369	R40H5083	R40H5707	NR	NR
	Fd	GM		7260 - D370	MD370	R40H5083	R40H5707	NR	NR
	Ra	GM	11-5/32 " x 2-3/4 "	2073AT - S653	R46473	R40H369	R40H4072DP[278]	R40H2586	R40H2587
	Ra	GM	13 " x 2-1/2 "	2042T - S655	R46451	R40H378	R40H7055	R40H2588	R40H2589
	Ra	GM	13 " x 3-1/2 "	2157T - S656	R46452	R40H378	R40H7055	R40H2588	R40H2589
8,900lb., 10,200lb. GVW, Except Express	Fd	BX		7081 - D149	MD149	R40H5010	R40H5529	NR	NR
9,200lb., 10,500lb. GVW, Except Express	Fd	GM		7084 - D153	MD392	R40H5004DP	R40H5500	NR	NR
1995 8,600 lb. GVW	Ra	GM	13 " x 2-1/2 "	2042T - S655	R46451	R40H378	R40H7055	R40H2588	R40H2589
	Ra	GM	13 " x 2-1/2 "	2042T - S655	R46451	R40H378	R40H7055	R40H2588	R40H2589
	Ra	GM	13 " x 2-1/2 "	2042T - S655	R46451	R40H378	R40H7055	R40H2588	R40H2589
	Ra	GM	13 " x 2-1/2 "	2042T - S655	R46451	R40H378	R40H7055	R40H2588	R40H2589
8,600, 9,200lb. GVW	Fd	GM		7084 - D153	MD392	R40H5004DP	R40H5500	NR	NR
	Fd	GM		7084 - D153	MD392	R40H5004DP	R40H5500	NR	NR
8,900lb., 10,200lb. GVW, Except Express	Fd	BX		7081 - D149	MD149	R40H5010	R40H5529	NR	NR
9,200 lb. GVW	Ra	GM	13 " x 3-1/2 "	2157T - S656	R46452	R40H378	R40H7055	R40H2588	R40H2589
	Ra	GM	13 " x 3-1/2 "	2157T - S656	R46452	R40H378	R40H7055	R40H2588	R40H2589
9,200lb., 10,500lb. GVW, Except Express	Fd	GM		7084 - D153	MD392	R40H5004DP	R40H5500	NR	NR
1994									
	Ra	GM	13 " x 2-1/2 "	2042T - S655	R46451	R40H378	R40H7055	R40H2588	R40H2589
	Ra	GM	13 " x 2-1/2 "	2042T - S655	R46451	R40H378	R40H7055	R40H2588	R40H2589
8,600 lb. GVW	Ra	GM	13 " x 2-1/2 "	2042T - S655	R46451	R40H378	R40H7055	R40H2588	R40H2589
	Ra	GM	13 " x 2-1/2 "	2042T - S655	R46451	R40H378	R40H7055	R40H2588	R40H2589
8,600, 9,200lb. GVW	Fd	GM		7084 - D153	MD392	R40H5004DP	R40H5500	NR	NR
	Fd	GM		7084 - D153	MD392	R40H5004DP	R40H5500	NR	NR
8,900lb., 10,200lb. GVW, Except Express	Fd	BX		7081 - D149	MD149	R40H5010	R40H5529	NR	NR
9,200 lb. GVW	Ra	GM	13 " x 3-1/2 "	2157T - S656	R46452	R40H378	R40H7055	R40H2588	R40H2589
	Ra	GM	13 " x 3-1/2 "	2157T - S656	R46452	R40H378	R40H7055	R40H2588	R40H2589
9,200lb., 10,500lb. GVW, Except Express	Fd	GM		7084 - D153	MD392	R40H5004DP	R40H5500	NR	NR
1993									
	Ra	GM	13 " x 2-1/2 "	2042T - S655	R46451	R40H378	R40H7055	R40H2588	R40H2589
	Ra	GM	13 " x 2-1/2 "	2042T - S655	R46451	R40H378	R40H7055	R40H2588	R40H2589
Except 9,200lb., 10,500lb. GVW, Except Express	Fd	GM		7084 - D153	MD392	R40H5004DP	R40H5500	NR	NR

53 - Power Brakes

278 - For Heavy Duty version use E-11287

282 - 10 1/2" Ring Gear, First Design; Use 3 3/8" Outside Diameter Axle Tubes

293 - With 9 1/2" Ring Gear and 6 3/8" Drum Width

332 - Power Brakes, Hydraulic Booster

346 - 4500 lb. Casting Number 2238451452, 10mm Inlet

381 - Rotor and Hub One Piece Assembly W/O ABS Ring

390 - Rotor and Hub One Piece Assembly With ABS Ring

MERITOR DRUM OR ROTOR NO.	CALIPER OR CYLINDER BORE SIZE	MERITOR CALIPER OR WHEEL CYLINDER (LEFT)	MERITOR CALIPER OR WHEEL CYLINDER (RIGHT)	MERITOR CALIPER OR WHEEL CYLINDER REPAIR KIT	MERITOR CALIPER PISTON	MERITOR MASTER CYLINDER	MERITOR MASTER CYLINDER KIT	MERITOR BRAKE HOSE (LEFT)	MERITOR BRAKE HOSE (RIGHT)
									GMC / CHEV(Cont.)
									G-3500, SERIES-1 TON VAN(Cont.)
R44141818[390]		R42R55688	R42R55687	-	-	R4113543[332]	N/A	R4578774	R4578772
R44145360		R42R55688	R42R55687	-	-	R4113543[332]	N/A	R4578774	R4578772
									G-3500,3600 SERIES-1 TON VAN
R44145107	2-15/16 "	R42R55501	R42R55500	R4066306	R4090087S	R4111266	N/A	R4578438	R451667
R44141829[390]	3-5/32 "	R42R55497	R42R55496	R4066330	R4090101S	R4111266	N/A	R4578438	R451667
R44140622	15/16	R4134102	R4134102	N/A	NR	-	-	R4577765	R4577765
R44140622	1-3/16 "	R4133708	R4133708	R4166872	NR	-	-	R4577765	R4577765
R44140622	1-3/16 "	R4133708	R4133708	R4166872	NR	-	-	R4577765	R4577765
R44145107	2-15/16 "	R42R55501	R42R55500	R4066306	R4090087S	R4111266	N/A	R4578438	R451667
R44141829[390]	3-5/32 "	R42R55497	R42R55496	R4066330	R4090101S	R4111266	N/A	R4578438	R451667
R44140622	15/16	R4134102	R4134102	N/A	NR	-	-	R4577765	R4577765
R44140622	1-1/16 "	R4133709	R4133709	N/A	NR	-	-	R4577765	R4577765
R44140622	1-3/16 "	R4133708	R4133708	R4166872	NR	-	-	R4577765	R4577765
R44145107	2-15/16 "	R42R55501	R42R55500	R4066306	R4090087S	R4111266	N/A	R4578438	R451667
R44141829[390]	3-5/32 "	R42R55497	R42R55496	R4066330	R4090101S	R4111266	N/A	R4578438	R451667
R44140622	15/16	R4134102	R4134102	N/A	NR	-	-	R4577765	R4577765
R44140622	1-1/16 "	R4133709	R4133709	N/A	NR	-	-	R4577765	R4577765
R44140622	1-3/16 "	R4133708	R4133708	R4166872	NR	-	-	R4577765	R4577765
R44141862	3-3/8 "	R42R55200	R42R55199[346]	R4066780	R4090021	R4111641[53]	N/A	R4577429	R4577430
R44141859	3-5/32 "	R42R55382	R42R55381	R4066557	R4090068S	R4112029[53]	R4122187	R4577427	R4577428
R44140449[293]	1-1/16 "	R4133709	R4133709	N/A	NR	-	-	R4577010	R4577010
R44140363[282]	1-1/16 "	R4133709	R4133709	N/A	NR	-	-	R4577010	R4577010
R44140449[293]	1-1/16 "	R4133709	R4133709	N/A	NR	-	-	R4577010	R4577010
R44140363[282]	1-1/16 "	R4133709	R4133709	N/A	NR	-	-	R4577010	R4577010
R44141861[381]	3-5/32 "	R42R55382	R42R55381	R4066557	R4090068S	R4111641[53]	N/A	R4577429	R4577430
R44141861[381]	3-5/32 "	R42R55382	R42R55381	R4066557	R4090068S	R4112029[53]	R4122187	R4577427	R4577428
R44141862	3-3/8 "	R42R55200	R42R55199[346]	R4066780	R4090021	R4111641[53]	N/A	R4577429	R4577430
R44140387	1-1/16 "	R4133709	R4133709	N/A	NR	-	-	R4577010	R4577010
R44140387	1-1/16 "	R4133709	R4133709	N/A	NR	-	-	R4577010	R4577010
R44141859	3-5/32 "	R42R55382	R42R55381	R4066557	R4090068S	R4112029[53]	R4122187	R4577427	R4577428
R44140363[282]	1-1/16 "	R4133709	R4133709	N/A	NR	-	-	R4577010	R4577010
R44140363[282]	1-1/16 "	R4133709	R4133709	N/A	NR	-	-	R4577010	R4577010
R44140449[293]	1-1/16 "	R4133709	R4133709	N/A	NR	-	-	R4577010	R4577010
R44140449[293]	1-1/16 "	R4133709	R4133709	N/A	NR	-	-	R4577010	R4577010
R44141861[381]	3-5/32 "	R42R55382	R42R55381	R4066557	R4090068S	R4111641[53]	N/A	R4577429	R4577430
R44141861[381]	3-5/32 "	R42R55382	R42R55381	R4066557	R4090068S	R4112029[53]	R4122187	R4577427	R4577428
R44141862	3-3/8 "	R42R55200	R42R55199[346]	R4066780	R4090021	R4111641[53]	N/A	R4577429	R4577430
R44140387	1-1/16 "	R4133709	R4133709	N/A	NR	-	-	R4577010	R4577010
R44140387	1-1/16 "	R4133709	R4133709	N/A	NR	-	-	R4577010	R4577010
R44141859	3-5/32 "	R42R55382	R42R55381	R4066557	R4090068S	R4112029[53]	R4122187	R4577427	R4577428
R44140363[282]	1-1/16 "	R4133709	R4133709	N/A	NR	-	-	-	-
R44140363[282]	1-1/16 "	R4133709	R4133709	N/A	NR	-	-	-	-
R44141861[381]	3-5/32 "	R42R55382	R42R55381	R4066557	R4090068S	R4111641[53]	N/A	R4577427	R4577428

MAKE MODEL YEAR AXLE CODE AXLE WEIGHT	AXLE & BRK. TYPE	BRK. MFG.	BRAKE SIZE	FMSI	MERITOR DISC PAD OR BRAKE SHOE	MERITOR GUIDE PIN OR RETURN SPRING KIT	MERITOR CALIPER HWD. KIT OR RETURN SPRING KIT	MERITOR ADJUSTER KIT (LEFT WHEEL)	MERITOR ADJUSTER KIT (RIGHT WHEEL)
GMC / CHEV(Cont.)									
G-3500,3600 SERIES-1 TON VAN(Cont.)									
1993									
	Fd	GM		7084 - D153	MD392	R40H5004DP	R40H5500	NR	NR
8,600 lb. GVW	Ra	GM	13 " x 2-1/2 "	2042T - S655	R46451	R40H378	R40H7055	R40H2588	R40H2589
8,900lb., 10,200lb. GVW,									
Except Express	Fd	BX		7081 - D149	MD149	R40H5010	R40H5529	NR	NR
9,200 lb. GVW	Ra	GM	13 " x 3-1/2 "	2157T - S656	R46452	R40H378	R40H7055	R40H2588	R40H2589
9,200lb., 10,500lb. GVW,									
Except Express	Fd	GM		7084 - D153	MD392	R40H5004DP	R40H5500	NR	NR
10,000 lb. GVW	Ra	GM	13 " x 3-1/2 "	2157T - S656	R46452	R40H378	R40H7055	R40H2588	R40H2589
1992									
8,600 lb. GVW	Ra	GM	13 " x 2-1/2 "	2042T - S655	R46451	R40H378	R40H7055	R40H2588	R40H2589
8,600, 9,200lb. GVW	Fd	GM		7084 - D153	MD392	R40H5004DP	R40H5500	NR	NR
	Fd	GM		7084 - D153	MD392	R40H5004DP	R40H5500	NR	NR
9,200 lb. GVW	Ra	GM	13 " x 3-1/2 "	2157T - S656	R46452	R40H378	R40H7055	R40H2588	R40H2589
10,000 lb. GVW	Fd	BX		7081 - D149	MD149	R40H5010	R40H5529	NR	NR
	Fd	BX		7081 - D149	MD149	R40H5010	R40H5529	NR	NR
	Ra	GM	13 " x 3-1/2 "	2157T - S656	R46452	R40H378	R40H7055	R40H2588	R40H2589
1991									
8,600 lb. GVW	Ra	GM	13 " x 2-1/2 "	2042T - S655	R46451	R40H378	R40H7055	R40H2588	R40H2589
8,600, 9,200lb. GVW	Fd	GM		7084 - D153	MD392	R40H5004DP	R40H5500	NR	NR
	Fd	GM		7084 - D153	MD392	R40H5004DP	R40H5500	NR	NR
9,200 lb. GVW	Ra	GM	13 " x 3-1/2 "	2157T - S656	R46452	R40H378	R40H7055	R40H2588	R40H2589
10,000 lb. GVW	Fd	BX		7081 - D149	MD149	R40H5010	R40H5529	NR	NR
	Fd	BX		7081 - D149	MD149	R40H5010	R40H5529	NR	NR
	Ra	GM	13 " x 3-1/2 "	2157T - S656	R46452	R40H378	R40H7055	R40H2588	R40H2589
1990									
8,600 lb. GVW	Ra	GM	13 " x 2-1/2 "	2042T - S655	R46451	R40H378	R40H7055	R40H2588	R40H2589
8,600, 9,200lb. GVW	Fd	GM		7084 - D153	MD392	R40H5004DP	R40H5500	NR	NR
	Fd	GM		7084 - D153	MD392	R40H5004DP	R40H5500	NR	NR
9,200 lb. GVW	Ra	GM	13 " x 3-1/2 "	2157T - S656	R46452	R40H378	R40H7055	R40H2588	R40H2589
10,000 lb. GVW	Fd	BX		7081 - D149	MD149	R40H5010	R40H5529	NR	NR
	Fd	BX		7081 - D149	MD149	R40H5010	R40H5529	NR	NR
	Ra	GM	13 " x 3-1/2 "	2157T - S656	R46452	R40H378	R40H7055	R40H2588	R40H2589
1989									
8,600 lb. GVW	Ra	GM	13 " x 2-1/2 "	2042T - S655	R46451	R40H378	R40H7055	R40H2588	R40H2589
8,600, 9,200lb. GVW	Fd	GM		7084 - D153	MD392	R40H5004DP	R40H5500	NR	NR
	Fd	GM		7084 - D153	MD392	R40H5004DP	R40H5500	NR	NR
9,200 lb. GVW	Ra	GM	13 " x 3-1/2 "	2157T - S656	R46452	R40H378	R40H7055	R40H2588	R40H2589
10,000 lb. GVW	Fd	BX		7081 - D149	MD149	R40H5010	R40H5529	NR	NR
	Fd	BX		7081 - D149	MD149	R40H5010	R40H5529	NR	NR
	Ra	GM	13 " x 3-1/2 "	2157T - S656	R46452	R40H378	R40H7055	R40H2588	R40H2589
1988									
8,600 lb. GVW	Ra	GM	13 " x 2-1/2 "	2042T - S655	R46451	R40H378	R40H7055	R40H2588	R40H2589
8,600, 9,200lb. GVW	Fd	GM		7084 - D153	MD392	R40H5004DP	R40H5500	NR	NR
	Fd	GM		7084 - D153	MD392	R40H5004DP	R40H5500	NR	NR
9,200 lb. GVW	Ra	GM	13 " x 3-1/2 "	2157T - S656	R46452	R40H378	R40H7055	R40H2588	R40H2589
10,000 lb. GVW	Fd	BX		7081 - D149	MD149	R40H5010	R40H5529	NR	NR
	Fd	BX		7081 - D149	MD149	R40H5010	R40H5529	NR	NR
	Ra	GM	13 " x 3-1/2 "	2157T - S656	R46452	R40H378	R40H7055	R40H2588	R40H2589
1987									
8,600 lb. GVW	Ra	GM	13 " x 2-1/2 "	2042T - S655	R46451	R40H378	R40H7055	R40H2588	R40H2589
8,600, 9,200lb. GVW	Fd	GM		7084 - D153	MD392	R40H5004DP	R40H5500	NR	NR
	Fd	GM		7084 - D153	MD392	R40H5004DP	R40H5500	NR	NR
9,200 lb. GVW	Ra	GM	13 " x 3-1/2 "	2157T - S656	R46452	R40H378	R40H7055	R40H2588	R40H2589
10,000 lb. GVW	Fd	BX		7081 - D149	MD149	R40H5010	R40H5529	NR	NR
	Fd	BX		7081 - D149	MD149	R40H5010	R40H5529	NR	NR
	Ra	GM	13 " x 3-1/2 "	2157T - S656	R46452	R40H378	R40H7055	R40H2588	R40H2589
1986									
8,400 lb. GVW	Fd	GM		7084A - D153	MD392	R40H5004DP	R40H5500	NR	NR
	Fd	GM		7084A - D153	MD392	R40H5004DP	R40H5500	NR	NR
	Ra	GM	13 " x 2-1/2 "	2042AT - 451	R46451	R40H378	R40H7055	R40H2588	R40H2589
10,000 lb. GVW	Fd	BX		7081 - D149	MD149	R40H5010	R40H5529	NR	NR
	Fd	BX		7081 - D149	MD149	R40H5010	R40H5529	NR	NR

32 - For rotor only use R44141480
293 - With 9 1/2" Ring Gear and 6 3/8" Drum Width
53 - Power Brakes
346 - 4500 lb. Casting Number 2238451452, 10mm Inlet
280 - 10 1/2" Ring Gear
381 - Rotor and Hub One Piece Assembly W/O ABS Ring

MERITOR DRUM OR ROTOR NO.	CALIPER OR CYLINDER BORE SIZE	MERITOR CALIPER OR WHEEL CYLINDER (LEFT)	MERITOR CALIPER OR WHEEL CYLINDER (RIGHT)	MERITOR CALIPER OR WHEEL CYLINDER REPAIR KIT	MERITOR CALIPER PISTON	MERITOR MASTER CYLINDER	MERITOR MASTER CYLINDER KIT	MERITOR BRAKE HOSE (LEFT)	MERITOR BRAKE HOSE (RIGHT)
									GMC / CHEV(Cont.)
									G-3500,3600 SERIES-1 TON VAN(Cont.)
R44141861[381]	3-5/32 "	R42R55382	R42R55381	R4066557	R4090068S	R4112029[53]	R4122187	R4577427	R4577428
R44140449[293]	1-1/16 "	R4133709	R4133709	N/A	NR	-	-	R4577010	R4577010
R44141862	3-3/8 "	R42R55200	R42R55199[346]	R4066780	R4090021	R4111641[53]	N/A	R4577429	R4577430
R44140387	1-1/16 "	R4133709	R4133709	N/A	NR	-	-	R4577010	R4577010
R44141859	3-5/32 "	R42R55382	R42R55381	R4066557	R4090068S	R4112029[53]	R4122187	R4577427	R4577428
R44140388[280]	1-3/16 "	R4133708	R4133708	R4166872	NR	-	-	R4577010	R4577010
R44140449[293]	1-1/16 "	R4133709	R4133709	N/A	NR	-	-	R4577010	R4577010
R44141861[381]	3-5/32 "	R42R55382	R42R55381	R4066557	R4090068S	R4111641[53]	N/A	R4577427	R4577428
R44141861[381]	3-5/32 "	R42R55382	R42R55381	R4066557	R4090068S	R4112029[53]	R4122187	R4577427	R4577428
R44140387	1-1/16 "	R4133709	R4133709	N/A	NR	-	-	R4577010	R4577010
N/A	3-3/8 "	R42R55200	R42R55199[346]	R4066780	R4090021	R4112029[53]	R4122187	R4577429	R4577430
N/A	3-3/8 "	R42R55200	R42R55199[346]	R4066780	R4090021	R4111641[53]	N/A	R4577429	R4577430
R44140388[280]	1-3/16 "	R4133708	R4133708	R4166872	NR	-	-	R4577010	R4577010
R44140449[293]	1-1/16 "	R4133709	R4133709	N/A	NR	-	-	R4577010	R4577010
R44141861[381]	3-5/32 "	R42R55382	R42R55381	R4066557	R4090068S	R4112029[53]	R4122187	R4577427	R4577428
R44141861[381]	3-5/32 "	R42R55382	R42R55381	R4066557	R4090068S	R4111641[53]	N/A	R4577427	R4577428
R44140387	1-1/16 "	R4133709	R4133709	N/A	NR	-	-	R4577010	R4577010
N/A	3-3/8 "	R42R55200	R42R55199[346]	R4066780	R4090021	R4111641[53]	N/A	R4577429	R4577430
N/A	3-3/8 "	R42R55200	R42R55199[346]	R4066780	R4090021	R4112029[53]	R4122187	R4577429	R4577430
R44140388[280]	1-3/16 "	R4133708	R4133708	R4166872	NR	-	-	R4577010	R4577010
R44140449[293]	1-1/16 "	R4133709	R4133709	N/A	NR	-	-	R4577010	R4577010
R44141861[381]	3-5/32 "	R42R55382	R42R55381	R4066557	R4090068S	R4112029[53]	R4122187	R4577427	R4577428
R44141861[381]	3-5/32 "	R42R55382	R42R55381	R4066557	R4090068S	R4111641[53]	N/A	R4577427	R4577428
R44140387	1-1/16 "	R4133709	R4133709	N/A	NR	-	-	R4577010	R4577010
N/A	3-3/8 "	R42R55200	R42R55199[346]	R4066780	R4090021	R4112029[53]	R4122187	R4577429	R4577430
N/A	3-3/8 "	R42R55200	R42R55199[346]	R4066780	R4090021	R4111641[53]	N/A	R4577429	R4577430
R44140388[280]	1-3/16 "	R4133708	R4133708	R4166872	NR	-	-	R4577010	R4577010
R44140449[293]	1-1/16 "	R4133709	R4133709	N/A	NR	-	-	R4577010	R4577010
R44141861[381]	3-5/32 "	R42R55382	R42R55381	R4066557	R4090068S	R4111641[53]	N/A	R4577427	R4577428
R44141861[381]	3-5/32 "	R42R55382	R42R55381	R4066557	R4090068S	R4112029[53]	R4122187	R4577427	R4577428
R44140387	1-1/16 "	R4133709	R4133709	N/A	NR	-	-	R4577010	R4577010
N/A	3-3/8 "	R42R55200	R42R55199[346]	R4066780	R4090021	R4112029[53]	R4122187	R4577429	R4577430
N/A	3-3/8 "	R42R55200	R42R55199[346]	R4066780	R4090021	R4111641[53]	N/A	R4577429	R4577430
R44140388[280]	1-3/16 "	R4133708	R4133708	R4166872	NR	-	-	R4577010	R4577010
R44140449[293]	1-1/16 "	R4133709	R4133709	N/A	NR	-	-	R4577010	R4577010
R44141861[381]	3-5/32 "	R42R55382	R42R55381	R4066557	R4090068S	R4111641[53]	N/A	R4577427	R4577428
R44141861[381]	3-5/32 "	R42R55382	R42R55381	R4066557	R4090068S	R4112029[53]	R4122187	R4577427	R4577428
R44140387	1-1/16 "	R4133709	R4133709	N/A	NR	-	-	R4577010	R4577010
N/A	3-3/8 "	R42R55200	R42R55199[346]	R4066780	R4090021	R4112029[53]	R4122187	R4577429	R4577430
N/A	3-3/8 "	R42R55200	R42R55199[346]	R4066780	R4090021	R4111641[53]	N/A	R4577429	R4577430
R44140388[280]	1-3/16 "	R4133708	R4133708	R4166872	NR	-	-	R4577010	R4577010
R44140449[293]	1-1/16 "	R4133709	R4133709	N/A	NR	-	-	R4577010	R4577010
R44141861[381]	3-5/32 "	R42R55382	R42R55381	R4066557	R4090068S	R4111641[53]	N/A	R4577427	R4577428
R44141861[381]	3-5/32 "	R42R55382	R42R55381	R4066557	R4090068S	R4112029[53]	R4122187	R4577427	R4577428
R44140387	1-1/16 "	R4133709	R4133709	N/A	NR	-	-	R4577010	R4577010
N/A	3-3/8 "	R42R55200	R42R55199[346]	R4066780	R4090021	R4112029[53]	R4122187	R4577429	R4577430
N/A	3-3/8 "	R42R55200	R42R55199[346]	R4066780	R4090021	R4111641[53]	N/A	R4577429	R4577430
R44140388[280]	1-3/16 "	R4133708	R4133708	R4166872	NR	-	-	R4577010	R4577010
R44141186[381]	3-5/32 "	R42R55382	R42R55381	R4066557	R4090068S	R4112029[53]	R4122187	R4577427	R4577428
R44141186[381]	3-5/32 "	R42R55382	R42R55381	R4066557	R4090068S	R4111641[53]	N/A	R4577427	R4577428
R44140449[293]	1-1/16 "	R4133709	R4133709	N/A	NR	-	-	R4577010	R4577010
R44141130[32]	3-3/8 "	R42R55200	R42R55199[346]	R4066780	R4090021	R4112029[53]	R4122187	R4577429	R4577430
R44141130[32]	3-3/8 "	R42R55200	R42R55199[346]	R4066780	R4090021	R4111641[53]	N/A	R4577429	R4577430

MAKE MODEL YEAR AXLE CODE AXLE WEIGHT	AXLE & BRK. TYPE	BRK. MFG.	BRAKE SIZE	FMSI	MERITOR DISC PAD OR BRAKE SHOE	MERITOR GUIDE PIN OR RETURN SPRING KIT	MERITOR CALIPER HWD. KIT OR RETURN SPRING KIT	MERITOR ADJUSTER KIT (LEFT WHEEL)	MERITOR ADJUSTER KIT (RIGHT WHEEL)
GMC / CHEV(Cont.)									
G-3500,3600 SERIES-1 TON VAN(Cont.)									
1986									
Dual Rear Wheels									
10,000 lb. GVW	Ra	GM	13 " x 3-1/2 "	2157T - 452	R46452	R40H378	R40H7055	R40H2588	R40H2589
Single Rear Wheels									
10,000 lb. GVW	Ra	GM	13 " x 3-1/2 "	2157T - 452	R46452	R40H378	R40H7055	R40H2588	R40H2589
1985									
8,400 lb. GVW	Fd	GM		7084A - D153	MD392	R40H5004DP	R40H5500	NR	NR
	Fd	GM		7084A - D153	MD392	R40H5004DP	R40H5500	NR	NR
	Ra	GM	13 " x 2-1/2 "	2042AT - 451	R46451	R40H378	R40H7055	R40H2588	R40H2589
10,000 lb. GVW	Fd	BX		7081 - D149	MD149	R40H5010	R40H5529	NR	NR
	Fd	BX		7081 - D149	MD149	R40H5010	R40H5529	NR	NR
Dual Rear Wheels									
10,000 lb. GVW	Ra	GM	13 " x 3-1/2 "	2157T - 452	R46452	R40H378	R40H7055	R40H2588	R40H2589
Single Rear Wheels									
10,000 lb. GVW	Ra	GM	13 " x 3-1/2 "	2157T - 452	R46452	R40H378	R40H7055	R40H2588	R40H2589
1984									
7,100, 8,600lb. GVW	Fd	GM		7084A - D153	MD392	R40H5004DP	R40H5500	NR	NR
8,400 lb. GVW	Fd	GM		7084A - D153	MD392	R40H5004DP	R40H5500	NR	NR
	Fd	GM		7084A - D153	MD392	R40H5004DP	R40H5500	NR	NR
	Ra	GM	13 " x 2-1/2 "	2042AT - 451	R46451	R40H378	R40H7055	R40H2588	R40H2589
10,000 lb. GVW	Fd	BX		7081 - D149	MD149	R40H5010	R40H5529	NR	NR
	Fd	BX		7081 - D149	MD149	R40H5010	R40H5529	NR	NR
Dual Rear Wheels									
10,000 lb. GVW	Ra	GM	13 " x 3-1/2 "	2157T - 452	R46452	R40H378	R40H7055	R40H2588	R40H2589
Single Rear Wheels									
10,000 lb. GVW	Ra	GM	13 " x 3-1/2 "	2157T - 452	R46452	R40H378	R40H7055	R40H2588	R40H2589
1983									
7,100, 8,600lb. GVW	Fd	GM		7084A - D153	MD392	R40H5004DP	R40H5500	NR	NR
8,400 lb. GVW	Fd	GM		7084A - D153	MD392	R40H5004DP	R40H5500	NR	NR
	Fd	GM		7084A - D153	MD392	R40H5004DP	R40H5500	NR	NR
	Ra	GM	13 " x 2-1/2 "	2042AT - 451	R46451	R40H378	R40H7055	R40H2588	R40H2589
10,000 lb. GVW	Fd	BX		7081 - D149	MD149	R40H5010	R40H5529	NR	NR
	Fd	BX		7081 - D149	MD149	R40H5010	R40H5529	NR	NR
Dual Rear Wheels									
10,000 lb. GVW	Ra	GM	13 " x 3-1/2 "	2157T - 452	R46452	R40H378	R40H7055	R40H2588	R40H2589
Single Rear Wheels									
10,000 lb. GVW	Ra	GM	13 " x 3-1/2 "	2157T - 452	R46452	R40H378	R40H7055	R40H2588	R40H2589
1982									
7,100, 8,600lb. GVW	Fd	GM		7084A - D153	MD392	R40H5004DP	R40H5500	NR	NR
	Fd	GM		7084A - D153	MD392	R40H5004DP	R40H5500	NR	NR
	Fd	GM		7084A - D153	MD392	R40H5004DP	R40H5500	NR	NR
	Fd	GM		7084A - D153	MD392	R40H5004DP	R40H5500	NR	NR
	Ra	GM	13 " x 2-1/2 "	2042AT - 451	R46451	R40H378	R40H7055	R40H2588	R40H2589
8,900, 10,500lb. GVW	Fd	BX		7081 - D149	MD149	R40H5010	R40H5529	NR	NR
	Fd	BX		7081 - D149	MD149	R40H5010	R40H5529	NR	NR
	Ra	GM	13 " x 3-1/2 "	2157T - 452	R46452	R40H378	R40H7055	R40H2588	R40H2589
1981									
7,100, 8,600lb. GVW	Fd	GM		7084A - D153	MD392	R40H5004DP	R40H5500	NR	NR
	Fd	GM		7084A - D153	MD392	R40H5004DP	R40H5500	NR	NR
	Fd	GM		7084A - D153	MD392	R40H5004DP	R40H5500	NR	NR
	Ra	GM	13 " x 2-1/2 "	2042AT - 451	R46451	R40H378	R40H7055	R40H2588	R40H2589
8,900, 10,500lb. GVW	Fd	BX		7081 - D149	MD149	R40H5010	R40H5529	NR	NR
	Fd	BX		7081 - D149	MD149	R40H5010	R40H5529	NR	NR
	Fd	BX		7081 - D149	MD149	R40H5010	R40H5529	NR	NR
	Ra	GM	13 " x 3-1/2 "	2157T - 452	R46452	R40H378	R40H7055	R40H2588	R40H2589
1980									
7,100, 8,600lb. GVW	Fd	GM		7084A - D153	MD392	R40H5004DP	R40H5500	NR	NR
	Fd	GM		7084A - D153	MD392	R40H5004DP	R40H5500	NR	NR
	Fd	GM		7084A - D153	MD392	R40H5004DP	R40H5500	NR	NR
	Fd	GM		7084A - D153	MD392	R40H5004DP	R40H5500	NR	NR
	Ra	GM	13 " x 2-1/2 "	2042AT - 451	R46451	R40H378	R40H7055	R40H2588	R40H2589
8,900, 10,500lb. GVW	Fd	BX		7081 - D149	MD149	R40H5010	R40H5529	NR	NR
	Fd	BX		7081 - D149	MD149	R40H5010	R40H5529	NR	NR
	Fd	BX		7081 - D149	MD149	R40H5010	R40H5529	NR	NR

32 - For rotor only use R44141480
53 - Power Brakes
280 - 10 1/2" Ring Gear
282 - 10 1/2" Ring Gear, First Design; Use 3 3/8" Outside Diameter Axle Tubes
293 - With 9 1/2" Ring Gear and 6 3/8" Drum Width
312 - Power Brakes, Except Hydroboost
346 - 4500 lb. Casting Number 2238451452, 10mm Inlet
381 - Rotor and Hub One Piece Assembly W/O ABS Ring

MERITOR DRUM OR ROTOR NO.	CALIPER OR CYLINDER BORE SIZE	MERITOR CALIPER OR WHEEL CYLINDER (LEFT)	MERITOR CALIPER OR WHEEL CYLINDER (RIGHT)	MERITOR CALIPER OR WHEEL CYLINDER REPAIR KIT	MERITOR CALIPER PISTON	MERITOR MASTER CYLINDER	MERITOR MASTER CYLINDER KIT	MERITOR BRAKE HOSE (LEFT)	MERITOR BRAKE HOSE (RIGHT)
GMC / CHEV(Cont.)									
G-3500,3600 SERIES-1 TON VAN(Cont.)									
R44140388[280]	1-3/16 "	R4133708	R4133708	R4166872	NR	-	-	R4577010	R4577010
R44140387	1-3/16 "	R4133708	R4133708	R4166872	NR	-	-	R4577010	R4577010
R44141186[381]	3-5/32 "	R42R55382	R42R55381	R4066557	R4090068S	R4111641[53]	N/A	R4577427	R4577428
R44141186[381]	3-5/32 "	R42R55382	R42R55381	R4066557	R4090068S	R4112029[53]	R4122187	R4577427	R4577428
R44140449[293]	1-1/16 "	R4133709	R4133709	N/A	NR	-	-	R4577010	R4577010
R44141130[32]	3-3/8 "	R42R55200	R42R55199[346]	R4066780	R4090021	R4111641[53]	N/A	R4577429	R4577430
R44141130[32]	3-3/8 "	R42R55200	R42R55199[346]	R4066780	R4090021	R4112029[53]	R4122187	R4577429	R4577430
R44140388[280]	1-3/16 "	R4133708	R4133708	R4166872	NR	-	-	R4577010	R4577010
R44140387	1-3/16 "	R4133708	R4133708	R4166872	NR	-	-	R4577010	R4577010
R44141186[381]	3-5/32 "	R42R55382	R42R55381	R4066557	R4090068S	-	-	-	-
R44141186[381]	3-5/32 "	R42R55382	R42R55381	R4066557	R4090068S	R4112029[53]	R4122187	R4577427	R4577428
R44141186[381]	3-5/32 "	R42R55382	R42R55381	R4066557	R4090068S	R4111641[53]	N/A	R4577427	R4577428
R44140449[293]	1-1/16 "	R4133709	R4133709	N/A	NR	-	-	R4577010	R4577010
R44141130[32]	3-3/8 "	R42R55200	R42R55199[346]	R4066780	R4090021	R4111641[53]	N/A	R4577429	R4577430
R44141130[32]	3-3/8 "	R42R55200	R42R55199[346]	R4066780	R4090021	R4112029[53]	R4122187	R4577429	R4577430
R44140388[280]	1-3/16 "	R4133708	R4133708	R4166872	NR	-	-	R4577010	R4577010
R44140387	1-3/16 "	R4133708	R4133708	R4166872	NR	-	-	R4577010	R4577010
R44141186[381]	3-5/32 "	R42R55382	R42R55381	R4066557	R4090068S	-	-	-	-
R44141186[381]	3-5/32 "	R42R55382	R42R55381	R4066557	R4090068S	R4112029[53]	R4122187	R4577427	R4577428
R44141186[381]	3-5/32 "	R42R55382	R42R55381	R4066557	R4090068S	R4111641[53]	N/A	R4577427	R4577428
R44140449[293]	1-1/16 "	R4133709	R4133709	N/A	NR	-	-	R4577010	R4577010
R44141130[32]	3-3/8 "	R42R55200	R42R55199[346]	R4066780	R4090021	R4112029[53]	R4122187	R4577429	R4577430
R44141130[32]	3-3/8 "	R42R55200	R42R55199[346]	R4066780	R4090021	R4111641[53]	N/A	R4577429	R4577430
R44140388[280]	1-3/16 "	R4133708	R4133708	R4166872	NR	-	-	R4577010	R4577010
R44140387	1-3/16 "	R4133708	R4133708	R4166872	NR	-	-	R4577010	R4577010
R44141186[381]	3-5/32 "	R42R55382	R42R55381	R4066557	R4090068S	-	-	-	-
R44141186[381]	3-5/32 "	R42R55382	R42R55381	R4066557	R4090068S	R4112029[53]	R4122187	R4577427	R4577428
R44141186[381]	3-5/32 "	R42R55382	R42R55381	R4066557	R4090068S	R4111641[53]	N/A	R4577427	R4577428
R44140449[293]	1-1/16 "	R4133709	R4133709	N/A	NR	-	-	R4577010	R4577010
R44141130[32]	3-3/8 "	R42R55200	R42R55199[346]	R4066780	R4090021	R4112029[53]	R4122187	R4577429	R4577430
R44141130[32]	3-3/8 "	R42R55200	R42R55199[346]	R4066780	R4090021	R4111641[53]	N/A	R4577429	R4577430
R44140388[280]	1-3/16 "	R4133708	R4133708	R4166872	NR	-	-	R4577010	R4577010
R44140387	1-3/16 "	R4133708	R4133708	R4166872	NR	-	-	R4577010	R4577010
R44141186[381]	3-5/32 "	R42R55382	R42R55381	R4066557	R4090068S	R4111641[53]	N/A	R451451	R4577421
R44141186[381]	3-5/32 "	R42R55382	R42R55381	R4066557	R4090068S	R4111641[53]	N/A	R4577320	R4577421
R44141186[381]	3-5/32 "	R42R55382	R42R55381	R4066557	R4090068S	R4111641[53]	N/A	R4577320	R4577421
R44141186[381]	3-5/32 "	R42R55382	R42R55381	R4066557	R4090068S	R4111641[53]	N/A	R451451	R4577421
R44140363[282]	1-1/16 "	R4133709	R4133709	N/A	NR	-	-	R4577010	R4577010
R44141130[32]	3-3/8 "	R42R55200	R42R55199[346]	R4066780	R4090021	R4111641[53]	N/A	R451451	R4577421
R44141130[32]	3-3/8 "	R42R55200	R42R55199[346]	R4066780	R4090021	R4111641[53]	N/A	R451451	R4577421
R44140388[280]	1-3/16 "	R4133708	R4133708	R4166872	NR	-	-	R4577010	R4577010
R44141186[381]	3-5/32 "	R42R55382	R42R55381	R4066557	R4090068S	R4111641[53]	N/A	R451451	R4577421
R44141186[381]	3-5/32 "	R42R55382	R42R55381	R4066557	R4090068S	R4111641[53]	N/A	R451451	R4577421
R44141186[381]	3-5/32 "	R42R55382	R42R55381	R4066557	R4090068S	R4111641[53]	N/A	R4577320	R4577421
R44140363[282]	1-1/16 "	R4133709	R4133709	N/A	NR	-	-	R4577010	R4577010
R44141130[32]	3-3/8 "	R42R55200	R42R55199[346]	R4066780	R4090021	R4111641[53]	N/A	R451451	R4577421
R44141130[32]	3-3/8 "	R42R55200	R42R55199[346]	R4066780	R4090021	R4111641[53]	N/A	R451451	R4577421
R44141130[32]	3-3/8 "	R42R55200	R42R55199[346]	R4066780	R4090021	R4111641[53]	N/A	R4577320	R4577421
R44140388[280]	1-3/16 "	R4133708	R4133708	R4166872	NR	-	-	R4577010	R4577010
R44141186[381]	3-5/32 "	R42R55382	R42R55381	R4066557	R4090068S	R4111730[312]	R4122203	R4577320	R4577421
R44141186[381]	3-5/32 "	R42R55382	R42R55381	R4066557	R4090068S	R4111641[53]	N/A	R4577320	R4577421
R44141186[381]	3-5/32 "	R42R55382	R42R55381	R4066557	R4090068S	R4111641[53]	N/A	R451451	R4577421
R44141186[381]	3-5/32 "	R42R55382	R42R55381	R4066557	R4090068S	R4111641[53]	N/A	R451451	R4577421
R44140363[282]	1-1/16 "	R4133709	R4133709	N/A	NR	-	-	R4577010	R4577010
R44141130[32]	3-3/8 "	R42R55200	R42R55199[346]	R4066780	R4090021	R4111641[53]	N/A	R451451	R4577421
R44141130[32]	3-3/8 "	R42R55200	R42R55199[346]	R4066780	R4090021	R4111641[53]	N/A	R451451	R4577421
R44141130[32]	3-3/8 "	R42R55200	R42R55199[346]	R4066780	R4090021	R4111641[53]	N/A	R4577320	R4577421

MAKE MODEL YEAR AXLE CODE AXLE WEIGHT	AXLE & BRK. TYPE	BRK. MFG.	BRAKE SIZE	FMSI	MERITOR DISC PAD OR BRAKE SHOE	MERITOR GUIDE PIN OR RETURN SPRING KIT	MERITOR CALIPER HWD. KIT OR RETURN SPRING KIT	MERITOR ADJUSTER KIT (LEFT WHEEL)	MERITOR ADJUSTER KIT (RIGHT WHEEL)
GMC / CHEV(Cont.)									
G-3500,3600 SERIES-1 TON VAN(Cont.)									
1980									
	Fd	BX		7081 - D149	MD149	R40H5010	R40H5529	NR	NR
	Ra	GM	13 " x 3-1/2 "	2157T - 452	R46452	R40H378	R40H7055	R40H2588	R40H2589
1979									
7,100, 8,600lb. GVW	Fd	GM		7084A - D153	MD392	R40H5004DP	R40H5500	NR	NR
	Fd	GM		7084A - D153	MD392	R40H5004DP	R40H5500	NR	NR
	Ra	GM	13 " x 2-1/2 "	2042AT - 451	R46451	R40H378	R40H7055	R40H2588	R40H2589
8,900, 10,500lb. GVW	Fd	BX		7081 - D149	MD149	R40H5010	R40H5529	NR	NR
	Fd	BX		7081 - D149	MD149	R40H5010	R40H5529	NR	NR
	Ra	GM	13 " x 3-1/2 "	2157T - 452	R46452	R40H378	R40H7055	R40H2588	R40H2589
1978									
	Fd	GM		728A - D52	MD52	R40H5004DP	R40H5500	NR	NR
	Ra	GM	11-5/32" x 2-3/4 "	2073TT - 473	R46473	R40H369	R40H4072DP[278]	R40H2586	R40H2587
	Ra	GM	13 " x 2-1/2 "	2042AT - 451	R46451	R40H378	R40H7055	R40H2588	R40H2589
	Ra	GM	13 " x 3-1/2 "	2157T - 452	R46452	R40H378	R40H7055	R40H2588	R40H2589
10,000 lb. GVW	Fd	BX		7081 - D149	MD149	R40H5010	R40H5529	NR	NR
1977									
	Fd	GM		728A - D52	MD52	R40H5004DP	R40H5500	NR	NR
	Fd	GM		728A - D52	MD52	R40H5004DP	R40H5500	NR	NR
10,000 lb. GVW	Fd	BX		7081 - D149	MD149	R40H5010	R40H5529	NR	NR
	Fd	BX		7081 - D149	MD149	R40H5010	R40H5529	NR	NR
1976									
	Fd	GM		728A - D52	MD52	R40H5004DP	R40H5500	NR	NR
10,000 lb. GVW	Fd	BX		7081 - D149	MD149	R40H5010	R40H5529	NR	NR
K-2500 SERIES-3/4 TON PICKUP AND SUBURBAN 4WD									
1998									
7,200 lb. GVW	Fd	GM		7259 - D369	MD369	R40H5083	R40H5707	NR	NR
	Ra	GM	11-5/32" x 2-3/4 "	2073TT - 473	R46473	R40H369	R40H4072DP[278]	R40H2586	R40H2587
8,600 lb. GVW	Fd	GM		7260 - D370	MD370	R40H5083	R40H5707	NR	NR
	Ra	GM	13 " x 2-1/2 "	2042T - S655	R46451	R40H378	R40H7055	R40H2588	R40H2589
	Ra	GM	13 " x 2-1/2 "	2042T - S655	R46451	R40H378	R40H7055	R40H2588	R40H2589
1997									
7,200 lb. GVW	Fd	GM		7259 - D369	MD369	R40H5083	R40H5707	NR	NR
	Ra	GM	11-5/32" x 2-3/4 "	2073TT - 473	R46473	R40H369	R40H4072DP[278]	R40H2586	R40H2587
8,600 lb. GVW	Fd	GM		7260 - D370	MD370	R40H5083	R40H5707	NR	NR
	Ra	GM	13 " x 2-1/2 "	2042T - S655	R46451	R40H378	R40H7055	R40H2588	R40H2589
	Ra	GM	13 " x 2-1/2 "	2042T - S655	R46451	R40H378	R40H7055	R40H2588	R40H2589
1996									
7,200 lb. GVW	Fd	GM		7259 - D369	MD369	R40H5083	R40H5707	NR	NR
	Ra	GM	11-5/32" x 2-3/4 "	2073TT - 473	R46473	R40H369	R40H4072DP[278]	R40H2586	R40H2587
8,600 lb. GVW	Fd	GM		7260 - D370	MD370	R40H5083	R40H5707	NR	NR
	Ra	GM	13 " x 2-1/2 "	2042T - S655	R46451	R40H378	R40H7055	R40H2588	R40H2589
	Ra	GM	13 " x 2-1/2 "	2042T - S655	R46451	R40H378	R40H7055	R40H2588	R40H2589
1995									
7,200 lb. GVW	Fd	GM		7259 - D369	MD369	R40H5083	R40H5707	NR	NR
	Ra	GM	11-5/32" x 2-3/4 "	2073TT - 473	R46473	R40H369	R40H4072DP[278]	R40H2586	R40H2587
8,600 lb. GVW	Fd	GM		7260 - D370	MD370	R40H5083	R40H5707	NR	NR
	Ra	GM	13 " x 2-1/2 "	2042T - S655	R46451	R40H378	R40H7055	R40H2588	R40H2589
	Ra	GM	13 " x 2-1/2 "	2042T - S655	R46451	R40H378	R40H7055	R40H2588	R40H2589
1994									
7,200 lb. GVW	Fd	GM		7259 - D369	MD369	R40H5083	R40H5707	NR	NR
	Ra	GM	11-5/32" x 2-3/4 "	2073TT - 473	R46473	R40H369	R40H4072DP[278]	R40H2586	R40H2587
8,600 lb. GVW	Fd	GM		7260 - D370	MD370	R40H5083	R40H5707	NR	NR
	Ra	GM	13 " x 2-1/2 "	2042T - S655	R46451	R40H378	R40H7055	R40H2588	R40H2589
	Ra	GM	13 " x 2-1/2 "	2042T - S655	R46451	R40H378	R40H7055	R40H2588	R40H2589
1993									
7,200 lb. GVW	Fd	GM		7259 - D369	MD369	R40H5083	R40H5707	NR	NR
	Fd	GM		7259 - D369	MD369	R40H5083	R40H5707	NR	NR
	Ra	GM	11-5/32" x 2-3/4 "	2073TT - 473	R46473	R40H369	R40H4072DP[278]	R40H2586	R40H2587
8,600 lb. GVW	Fd	GM		7260 - D370	MD370	R40H5083	R40H5707	NR	NR
	Fd	GM		7260 - D370	MD370	R40H5083	R40H5707	NR	NR
	Ra	GM	13 " x 2-1/2 "	2042T - S655	R46451	R40H378	R40H7055	R40H2588	R40H2589
	Ra	GM	13 " x 2-1/2 "	2042T - S655	R46451	R40H378	R40H7055	R40H2588	R40H2589

32 - For rotor only use R44141480
53 - Power Brakes
278 - For Heavy Duty version use E-11287
280 - 10 1/2" Ring Gear
282 - 10 1/2" Ring Gear, First Design; Use 3 3/8" Outside Diameter Axle Tubes
291 - Except 9 1/2" Ring Gear
293 - With 9 1/2" Ring Gear and 6 3/8" Drum Width
309 - Power Brakes, Hydroboost
312 - Power Brakes, Except Hydroboost

MERITOR DRUM OR ROTOR NO.	CALIPER OR CYLINDER BORE SIZE	MERITOR CALIPER OR WHEEL CYLINDER (LEFT)	MERITOR CALIPER OR WHEEL CYLINDER (RIGHT)	MERITOR CALIPER OR WHEEL CYLINDER REPAIR KIT	MERITOR CALIPER PISTON	MERITOR MASTER CYLINDER	MERITOR MASTER CYLINDER KIT	MERITOR BRAKE HOSE (LEFT)	MERITOR BRAKE HOSE (RIGHT)
									GMC / CHEV(Cont.)
									G-3500,3600 SERIES-1 TON VAN(Cont.)
R44141130[32]	3-3/8 "	R42R55200	R42R55199[346]	R4066780	R4090021	R4111730[312]	R4122203	R4577320	R4577421
R44140388[280]	1-3/16 "	R4133708	R4133708	R4166872	NR	-	-	R4577010	R4577010
R44141186[381]	3-5/32 "	R42R55382	R42R55381	R4066557	R4090068S	R4111730[312]	R4122203	R4577320	R4577421
R44141186[381]	3-5/32 "	R42R55382	R42R55381	R4066557	R4090068S	R4111730[312]	R4122203	R451451	R4577421
R44140363[282]	1-1/16 "	R4133709	R4133709	N/A	NR	-	-	R4577010	R4577010
R44141130[32]	3-3/8 "	R42R55200	R42R55199[346]	R4066780	R4090021	R4111730[312]	R4122203	R4577320	R4577421
R44141130[32]	3-3/8 "	R42R55200	R42R55199[346]	R4066780	R4090021	R4111730[312]	R4122203	R451451	R4577421
R44140388[280]	1-3/16 "	R4133708	R4133708	R4166872	NR	-	-	R4577010	R4577010
R44141186[381]	2-15/16 "	R42R55061	R42R55060	R4066848	R4090013S	R4111641[53]	N/A	-	-
N/A		-	-	N/A	NR	-	-	-	-
R44140363[282]		-	-	N/A	NR	-	-	-	-
R44140388[280]		-	-	N/A	NR	-	-	-	-
R44141130[32]	3-3/8 "	R42R55200	R42R55199[346]	R4066780	R4090021	R4111641[53]	N/A	-	-
R44141186[381]	2-15/16 "	R42R55061	R42R55060	R4066848	R4090013S	R4111641[53]	N/A	-	-
R44141186[381]	2-15/16 "	R42R55061	R42R55060	R4066848	R4090013S	-	-	-	-
R44141130[32]	3-3/8 "	R42R55200	R42R55199[346]	R4066780	R4090021	R4111641[53]	N/A	-	-
R44141130[32]	3-3/8 "	R42R55200	R42R55199[346]	R4066780	R4090021	-	-	-	-
R44141186[381]	2-15/16 "	R42R55061	R42R55060	R4066848	R4090013S	R4111641[53]	N/A	-	-
R44141130[32]	3-3/8 "	R42R55200	R42R55199[346]	R4066780	R4090021	R4111641[53]	N/A	-	-
									K-2500 SERIES-3/4 TON PICKUP AND SUBURBAN 4WD
R44141453[405]	2-15/16 "	R42R55501	R42R55500	R4066306	R4090087S	R4112220[309]	R4122141	R4577768	R4577769
R44140543[291]	1 "	R4134037	R4134037	R4166620	NR	-	-	R4577765	R4577765
R44141477[405]	3-5/32 "	R42R55497	R42R55496	R4066330	R4090101S	R4112220[309]	R4122141	R4578224	R4578787
R44140363[282]	1-1/16 "	R4133709	R4133709	N/A	NR	-	-	R4577765	R4577765
R44140449[293]	1-1/16 "	R4133709	R4133709	N/A	NR	-	-	R4577765	R4577765
R44141453[405]	2-15/16 "	R42R55501	R42R55500	R4066306	R4090087S	R4112220[309]	R4122141	R4577768	R4577769
R44140543[291]	1 "	R4134037	R4134037	R4166620	NR	-	-	R4577765	R4577765
R44141477[405]	3-5/32 "	R42R55497	R42R55496	R4066330	R4090101S	R4112220[309]	R4122141	R4578224	R4578787
R44140449[293]	1-1/16 "	R4133709	R4133709	N/A	NR	-	-	R4577765	R4577765
R44140363[282]	1-1/16 "	R4133709	R4133709	N/A	NR	-	-	R4577765	R4577765
R44141453[405]	2-15/16 "	R42R55501	R42R55500	R4066306	R4090087S	R4112220[309]	R4122141	R4577768	R4577769
R44140543[291]	1 "	R4134037	R4134037	R4166620	NR	-	-	R4577765	R4577765
R44141477[405]	3-5/32 "	R42R55497	R42R55496	R4066330	R4090101S	R4112220[309]	R4122141	R4578224	R4578787
R44140449[293]	1-1/16 "	R4133709	R4133709	N/A	NR	-	-	R4577765	R4577765
R44140363[282]	1-1/16 "	R4133709	R4133709	N/A	NR	-	-	R4577765	R4577765
R44141453[405]	2-15/16 "	R42R55501	R42R55500	R4066306	R4090087S	R4112220[309]	R4122141	R4577768	R4577769
R44140543[291]	1 "	R4134037	R4134037	R4166620	NR	-	-	R4577765	R4577765
R44141477[405]	3-5/32 "	R42R55497	R42R55496	R4066330	R4090101S	R4112220[309]	R4122141	R4578224	R4578787
R44140449[293]	1-1/16 "	R4133709	R4133709	N/A	NR	-	-	R4577765	R4577765
R44140363[282]	1-1/16 "	R4133709	R4133709	N/A	NR	-	-	R4577765	R4577765
R44141453[405]	2-15/16 "	R42R55501	R42R55500	R4066306	R4090087S	R4112220[309]	R4122141	R4577768	R4577769
R44140543[291]	1 "	R4134037	R4134037	R4166620	NR	-	-	R4577765	R4577765
R44141477[405]	3-5/32 "	R42R55497	R42R55496	R4066330	R4090101S	R4112220[309]	R4122141	R4578224	R4578787
R44140449[293]	1-1/16 "	R4133709	R4133709	N/A	NR	-	-	R4577765	R4577765
R44140363[282]	1-1/16 "	R4133709	R4133709	N/A	NR	-	-	R4577765	R4577765
R44141453[405]	2-15/16 "	R42R55501	R42R55500	R4066306	R4090087S	R4112219[334]	N/A	R4577768	R4577769
R44141453[405]	2-15/16 "	R42R55501	R42R55500	R4066306	R4090087S	R4112220[309]	R4122141	R4577768	R4577769
R44140543[291]	1 "	R4134037	R4134037	R4166620	NR	-	-	R4577765	R4577765
R44141477[405]	3-5/32 "	R42R55497	R42R55496	R4066330	R4090101S	R4112219[334]	N/A	R4578224	R4578787
R44141477[405]	3-5/32 "	R42R55497	R42R55496	R4066330	R4090101S	R4112220[309]	R4122141	R4578224	R4578787
R44140449[293]	1-1/16 "	R4133709	R4133709	N/A	NR	-	-	R4577765	R4577765
R44140363[282]	1-1/16 "	R4133709	R4133709	N/A	NR	-	-	R4577765	R4577765

334 - Power Brakes, Vacuum Booster
346 - 4500 lb. Casting Number 2238451452, 10mm Inlet
381 - Rotor and Hub One Piece Assembly W/O ABS Ring
405 - Rotor Only

MAKE MODEL YEAR AXLE CODE AXLE WEIGHT	AXLE & BRK. TYPE	BRK. MFG.	BRAKE SIZE	FMSI	MERITOR DISC PAD OR BRAKE SHOE	MERITOR GUIDE PIN OR RETURN SPRING KIT	MERITOR CALIPER HWD. KIT OR RETURN SPRING KIT	MERITOR ADJUSTER KIT (LEFT WHEEL)	MERITOR ADJUSTER KIT (RIGHT WHEEL)
GMC / CHEV(Cont.)									
K-2500 SERIES-3/4 TON PICKUP AND SUBURBAN 4WD(Cont.)									
1992									
	Ra	GM	13 " x 2-1/2 "	2042AT - 451	R46451	R40H378	R40H7055	R40H2588	R40H2589
	Ra	GM	13 " x 2-1/2 "	2042AT - 451	R46451	R40H378	R40H7055	R40H2588	R40H2589
7,200 lb. GVW	Fd	GM		7259 - D369	MD369	R40H5083	R40H5707	NR	NR
	Fd	GM		7259 - D369	MD369	R40H5083	R40H5707	NR	NR
	Ra	GM	11-5/32" x 2-3/4 "	2073TT - 473	R46473	R40H369	R40H4072DP[278]	R40H2586	R40H2587
8,600 lb. GVW	Fd	GM		7260 - D370	MD370	R40H5083	R40H5707	NR	NR
	Fd	GM		7260 - D370	MD370	R40H5083	R40H5707	NR	NR
1991									
	Ra	GM	11-5/32" x 2-3/4 "	2073TT - 473	R46473	R40H369	R40H4072DP[278]	R40H2586	R40H2587
	Ra	GM	11-5/32" x 2-3/4 "	2073TT - 473	R46473	R40H369	R40H4072DP[278]	R40H2586	R40H2587
	Ra	GM	13 " x 2-1/2 "	2042AT - 451	R46451	R40H378	R40H7055	R40H2588	R40H2589
	Ra	GM	13 " x 2-1/2 "	2042AT - 451	R46451	R40H378	R40H7055	R40H2588	R40H2589
	Ra	GM	13 " x 2-1/2 "	2042AT - 451	R46451	R40H378	R40H7055	R40H2588	R40H2589
	Ra	GM	13 " x 2-1/2 "	2042AT - 451	R46451	R40H378	R40H7055	R40H2588	R40H2589
7,200 lb. GVW	Fd	GM		7259 - D369	MD369	R40H5083	R40H5707	NR	NR
	Fd	GM		7259 - D369	MD369	R40H5083	R40H5707	NR	NR
8,600 lb. GVW	Fd	GM		7260 - D370	MD370	R40H5083	R40H5707	NR	NR
	Fd	GM		7260 - D370	MD370	R40H5083	R40H5707	NR	NR
1990									
	Ra	GM	11-5/32" x 2-3/4 "	2073TT - 473	R46473	R40H369	R40H4072DP[278]	R40H2586	R40H2587
	Ra	GM	11-5/32" x 2-3/4 "	2073TT - 473	R46473	R40H369	R40H4072DP[278]	R40H2586	R40H2587
	Ra	GM	13 " x 2-1/2 "	2042AT - 451	R46451	R40H378	R40H7055	R40H2588	R40H2589
	Ra	GM	13 " x 2-1/2 "	2042AT - 451	R46451	R40H378	R40H7055	R40H2588	R40H2589
	Ra	GM	13 " x 2-1/2 "	2042AT - 451	R46451	R40H378	R40H7055	R40H2588	R40H2589
	Ra	GM	13 " x 2-1/2 "	2042AT - 451	R46451	R40H378	R40H7055	R40H2588	R40H2589
7,200 lb. GVW	Fd	GM		7259 - D369	MD369	R40H5083	R40H5707	NR	NR
	Fd	GM		7259 - D369	MD369	R40H5083	R40H5707	NR	NR
8,600 lb. GVW	Fd	GM		7260 - D370	MD370	R40H5083	R40H5707	NR	NR
	Fd	GM		7260 - D370	MD370	R40H5083	R40H5707	NR	NR
1989									
	Ra	GM	11-5/32" x 2-3/4 "	2073TT - 473	R46473	R40H369	R40H4072DP[278]	R40H2586	R40H2587
	Ra	GM	11-5/32" x 2-3/4 "	2073TT - 473	R46473	R40H369	R40H4072DP[278]	R40H2586	R40H2587
	Ra	GM	13 " x 2-1/2 "	2042AT - 451	R46451	R40H378	R40H7055	R40H2588	R40H2589
	Ra	GM	13 " x 2-1/2 "	2042AT - 451	R46451	R40H378	R40H7055	R40H2588	R40H2589
	Ra	GM	13 " x 2-1/2 "	2042AT - 451	R46451	R40H378	R40H7055	R40H2588	R40H2589
	Ra	GM	13 " x 2-1/2 "	2042AT - 451	R46451	R40H378	R40H7055	R40H2588	R40H2589
7,200 lb. GVW	Fd	GM		7259 - D369	MD369	R40H5083	R40H5707	NR	NR
	Fd	GM		7259 - D369	MD369	R40H5083	R40H5707	NR	NR
8,600 lb. GVW	Fd	GM		7260 - D370	MD370	R40H5083	R40H5707	NR	NR
	Fd	GM		7260 - D370	MD370	R40H5083	R40H5707	NR	NR
1988									
	Ra	GM	11-5/32" x 2-3/4 "	2073TT - 473	R46473	R40H369	R40H4072DP[278]	R40H2586	R40H2587
	Ra	GM	11-5/32" x 2-3/4 "	2073TT - 473	R46473	R40H369	R40H4072DP[278]	R40H2586	R40H2587
	Ra	GM	13 " x 2-1/2 "	2042AT - 451	R46451	R40H378	R40H7055	R40H2588	R40H2589
	Ra	GM	13 " x 2-1/2 "	2042AT - 451	R46451	R40H378	R40H7055	R40H2588	R40H2589
	Ra	GM	13 " x 2-1/2 "	2042AT - 451	R46451	R40H378	R40H7055	R40H2588	R40H2589
	Ra	GM	13 " x 2-1/2 "	2042AT - 451	R46451	R40H378	R40H7055	R40H2588	R40H2589
7,200 lb. GVW	Fd	GM		7259 - D369	MD369	R40H5083	R40H5707	NR	NR
	Fd	GM		7259 - D369	MD369	R40H5083	R40H5707	NR	NR
8,600 lb. GVW	Fd	GM		7260 - D370	MD370	R40H5083	R40H5707	NR	NR
	Fd	GM		7260 - D370	MD370	R40H5083	R40H5707	NR	NR
1986									
	Ra	GM	11-5/32" x 2-3/4 "	2073TT - 473	R46473	R40H369	R40H4072DP[278]	R40H2586	R40H2587
	Ra	GM	11-5/32" x 2-3/4 "	2073TT - 473	R46473	R40H369	R40H4072DP[278]	R40H2586	R40H2587
	Ra	GM	13 " x 2-1/2 "	2042AT - 451	R46451	R40H378	R40H7055	R40H2588	R40H2589
	Ra	GM	13 " x 2-1/2 "	2042AT - 451	R46451	R40H378	R40H7055	R40H2588	R40H2589
6,600lb. GVW	Fd	GM		728A - D52	MD52	R40H5004DP	R40H5500	NR	NR
	Fd	GM		728A - D52	MD52	R40H5004DP	R40H5500	NR	NR
8,600 lb. GVW	Fd	GM		7084A - D153	MD392	R40H5004DP	R40H5500	NR	NR
	Fd	GM		7084A - D153	MD392	R40H5004DP	R40H5500	NR	NR
1985									
	Ra	GM	11-5/32" x 2-3/4 "	2073TT - 473	R46473	R40H369	R40H4072DP[278]	R40H2586	R40H2587
	Ra	GM	11-5/32" x 2-3/4 "	2073TT - 473	R46473	R40H369	R40H4072DP[278]	R40H2586	R40H2587

35 - R44141049 is rotor only, for hub only use E-8394

278 - For Heavy Duty version use E-11287

282 - 10 1/2" Ring Gear, First Design; Use 3 3/8" Outside Diameter Axle Tubes

291 - Except 9 1/2" Ring Gear

293 - With 9 1/2" Ring Gear and 6 3/8" Drum Width

309 - Power Brakes, Hydroboost

334 - Power Brakes, Vacuum Booster

405 - Rotor Only

MERITOR DRUM OR ROTOR NO.	CALIPER OR CYLINDER BORE SIZE	MERITOR CALIPER OR WHEEL CYLINDER (LEFT)	MERITOR CALIPER OR WHEEL CYLINDER (RIGHT)	MERITOR CALIPER OR WHEEL CYLINDER REPAIR KIT	MERITOR CALIPER PISTON	MERITOR MASTER CYLINDER	MERITOR MASTER CYLINDER KIT	MERITOR BRAKE HOSE (LEFT)	MERITOR BRAKE HOSE (RIGHT)
									GMC / CHEV(Cont.)
									K-2500 SERIES-3/4 TON PICKUP AND SUBURBAN 4WD(Cont.)
R44140363[282]	1-1/16 "	R4133709	R4133709	N/A	NR	-	-	R4577765	R4577765
R44140449[293]	1-1/16 "	R4133709	R4133709	N/A	NR	-	-	R4577765	R4577765
R44141453[405]	2-15/16 "	R42R55501	R42R55500	R4066306	R4090087S	R4112220[309]	R4122141	R4577768	R4577769
R44141453[405]	2-15/16 "	R42R55501	R42R55500	R4066306	R4090087S	R4112219[334]	N/A	R4577768	R4577769
R44140543[291]	1 "	R4134037	R4134037	R4166620	NR	-	-	R4577765	R4577765
R44141477[405]	3-5/32 "	R42R55497	R42R55496	R4066330	R4090101S	R4112220[309]	R4122141	R4578224	R4578787
R44141477[405]	3-5/32 "	R42R55497	R42R55496	R4066330	R4090101S	R4112219[334]	N/A	R4578224	R4578787
N/A	1 "	R4134037	R4134037	R4166620	NR	-	-	-	-
N/A	1 "	R4134037	R4134037	R4166620	NR	-	-	-	-
R44140449[293]	1-1/16 "	R4133709	R4133709	N/A	NR	-	-	-	-
R44140449[293]	1-1/16 "	R4133709	R4133709	N/A	NR	-	-	-	-
R44140363[282]	1-1/16 "	R4133709	R4133709	N/A	NR	-	-	-	-
R44140363[282]	1-1/16 "	R4133709	R4133709	N/A	NR	-	-	-	-
R44141453[405]	2-15/16 "	R42R55501	R42R55500	R4066306	R4090087S	-	-	-	-
R44141453[405]	2-15/16 "	R42R55501	R42R55500	R4066306	R4090087S	-	-	-	-
R44141477[405]	3-5/32 "	R42R55497	R42R55496	R4066330	R4090101S	-	-	-	-
R44141477[405]	3-5/32 "	R42R55497	R42R55496	R4066330	R4090101S	-	-	-	-
N/A	1 "	R4134037	R4134037	R4166620	NR	-	-	-	-
N/A	1 "	R4134037	R4134037	R4166620	NR	-	-	-	-
R44140363[282]	1-1/16 "	R4133709	R4133709	N/A	NR	-	-	-	-
R44140449[293]	1-1/16 "	R4133709	R4133709	N/A	NR	-	-	-	-
R44140449[293]	1-1/16 "	R4133709	R4133709	N/A	NR	-	-	-	-
R44140363[282]	1-1/16 "	R4133709	R4133709	N/A	NR	-	-	-	-
R44141453[405]	2-15/16 "	R42R55501	R42R55500	R4066306	R4090087S	-	-	-	-
R44141453[405]	2-15/16 "	R42R55501	R42R55500	R4066306	R4090087S	-	-	-	-
R44141477[405]	3-5/32 "	R42R55497	R42R55496	R4066330	R4090101S	-	-	-	-
R44141477[405]	3-5/32 "	R42R55497	R42R55496	R4066330	R4090101S	-	-	-	-
N/A	1 "	R4134037	R4134037	R4166620	NR	-	-	-	-
N/A	1 "	R4134037	R4134037	R4166620	NR	-	-	-	-
R44140449[293]	1-1/16 "	R4133709	R4133709	N/A	NR	-	-	-	-
R44140449[293]	1-1/16 "	R4133709	R4133709	N/A	NR	-	-	-	-
R44140363[282]	1-1/16 "	R4133709	R4133709	N/A	NR	-	-	-	-
R44140363[282]	1-1/16 "	R4133709	R4133709	N/A	NR	-	-	-	-
R44141453[405]	2-15/16 "	R42R55501	R42R55500	R4066306	R4090087S	-	-	-	-
R44141453[405]	2-15/16 "	R42R55501	R42R55500	R4066306	R4090087S	-	-	-	-
R44141477[405]	3-5/32 "	R42R55497	R42R55496	R4066330	R4090101S	-	-	-	-
R44141477[405]	3-5/32 "	R42R55497	R42R55496	R4066330	R4090101S	-	-	-	-
N/A	1 "	R4134037	R4134037	R4166620	NR	-	-	-	-
N/A	1 "	R4134037	R4134037	R4166620	NR	-	-	-	-
R44140449[293]	1-1/16 "	R4133709	R4133709	N/A	NR	-	-	-	-
R44140449[293]	1-1/16 "	R4133709	R4133709	N/A	NR	-	-	-	-
R44140363[282]	1-1/16 "	R4133709	R4133709	N/A	NR	-	-	-	-
R44140363[282]	1-1/16 "	R4133709	R4133709	N/A	NR	-	-	-	-
R44141453[405]	2-15/16 "	R42R55501	R42R55500	R4066306	R4090087S	-	-	-	-
R44141453[405]	2-15/16 "	R42R55501	R42R55500	R4066306	R4090087S	-	-	-	-
R44141477[405]	3-5/32 "	R42R55497	R42R55496	R4066330	R4090101S	-	-	-	-
R44141477[405]	3-5/32 "	R42R55497	R42R55496	R4066330	R4090101S	-	-	-	-
R44140450	1 "	R4133608	R4133608	R4166620	NR	-	-	-	-
R44140450	1 "	R4133608	R4133608	R4166620	NR	-	-	-	-
R44140449[293]	1-1/16 "	R4133709	R4133709	N/A	NR	-	-	-	-
R44140449[293]	1-1/16 "	R4133709	R4133709	N/A	NR	-	-	-	-
R44141049[35]	2-15/16 "	R42R55206	R42R55205	R4066848	R4090013S	-	-	-	-
R44141049[35]	2-15/16 "	R42R55206	R42R55205	R4066848	R4090013S	-	-	-	-
R44141049[35]	3-5/32 "	R42R55382	R42R55381	R4066557	R4090068S	-	-	-	-
R44141049[35]	3-5/32 "	R42R55382	R42R55381	R4066557	R4090068S	-	-	-	-
R44140450	1 "	R4133608	R4133608	R4166620	NR	-	-	-	-
R44140450	1 "	R4133608	R4133608	R4166620	NR	-	-	-	-

MAKE MODEL YEAR AXLE CODE AXLE WEIGHT	AXLE & BRK. TYPE	BRK. MFG.	BRAKE SIZE	FMSI	MERITOR DISC PAD OR BRAKE SHOE	MERITOR GUIDE PIN OR RETURN SPRING KIT	MERITOR CALIPER HWD. KIT OR RETURN SPRING KIT	MERITOR ADJUSTER KIT (LEFT WHEEL)	MERITOR ADJUSTER KIT (RIGHT WHEEL)
GMC / CHEV(Cont.)									
K-2500 SERIES-3/4 TON PICKUP AND SUBURBAN 4WD(Cont.)									
1985									
	Ra	GM	13 " x 2-1/2 "	2042AT - 451	R46451	R40H378	R40H7055	R40H2588	R40H2589
	Ra	GM	13 " x 2-1/2 "	2042AT - 451	R46451	R40H378	R40H7055	R40H2588	R40H2589
6,600lb. GVW	Fd	GM		728A - D52	MD52	R40H5004DP	R40H5500	NR	NR
	Fd	GM		728A - D52	MD52	R40H5004DP	R40H5500	NR	NR
8,600 lb. GVW	Fd	GM		7084A - D153	MD392	R40H5004DP	R40H5500	NR	NR
	Fd	GM		7084A - D153	MD392	R40H5004DP	R40H5500	NR	NR
1984									
	Ra	GM	11-5/32" x 2-3/4 "	2073TT - 473	R46473	R40H369	R40H4072DP[278]	R40H2586	R40H2587
	Ra	GM	11-5/32" x 2-3/4 "	2073TT - 473	R46473	R40H369	R40H4072DP[278]	R40H2586	R40H2587
	Ra	GM	13 " x 2-1/2 "	2042AT - 451	R46451	R40H378	R40H7055	R40H2588	R40H2589
	Ra	GM	13 " x 2-1/2 "	2042AT - 451	R46451	R40H378	R40H7055	R40H2588	R40H2589
6,600lb. GVW	Fd	GM		728A - D52	MD52	R40H5004DP	R40H5500	NR	NR
	Fd	GM		728A - D52	MD52	R40H5004DP	R40H5500	NR	NR
8,600 lb. GVW	Fd	GM		7084A - D153	MD392	R40H5004DP	R40H5500	NR	NR
	Fd	GM		7084A - D153	MD392	R40H5004DP	R40H5500	NR	NR
1983									
	Ra	GM	11-5/32" x 2-3/4 "	2073TT - 473	R46473	R40H369	R40H4072DP[278]	R40H2586	R40H2587
	Ra	GM	11-5/32" x 2-3/4 "	2073TT - 473	R46473	R40H369	R40H4072DP[278]	R40H2586	R40H2587
	Ra	GM	11-5/32" x 2-3/4 "	2073TT - 473	R46473	R40H369	R40H4072DP[278]	R40H2586	R40H2587
	Ra	GM	11-5/32" x 2-3/4 "	2073TT - 473	R46473	R40H369	R40H4072DP[278]	R40H2586	R40H2587
	Ra	GM	13 " x 2-1/2 "	2042AT - 451	R46451	R40H378	R40H7055	R40H2588	R40H2589
	Ra	GM	13 " x 2-1/2 "	2042AT - 451	R46451	R40H378	R40H7055	R40H2588	R40H2589
	Ra	GM	13 " x 2-1/2 "	2042AT - 451	R46451	R40H378	R40H7055	R40H2588	R40H2589
	Ra	GM	13 " x 2-1/2 "	2042AT - 451	R46451	R40H378	R40H7055	R40H2588	R40H2589
6,600lb. GVW	Fd	GM		728A - D52	MD52	R40H5004DP	R40H5500	NR	NR
	Fd	GM		728A - D52	MD52	R40H5004DP	R40H5500	NR	NR
8,600 lb. GVW	Fd	GM		7084A - D153	MD392	R40H5004DP	R40H5500	NR	NR
	Fd	GM		7084A - D153	MD392	R40H5004DP	R40H5500	NR	NR
1982									
	Ra	GM	11-5/32" x 2-3/4 "	2073TT - 473	R46473	R40H369	R40H4072DP[278]	R40H2586	R40H2587
	Ra	GM	11-5/32" x 2-3/4 "	2073TT - 473	R46473	R40H369	R40H4072DP[278]	R40H2586	R40H2587
	Ra	GM	13 " x 2-1/2 "	2042AT - 451	R46451	R40H378	R40H7055	R40H2588	R40H2589
	Ra	GM	13 " x 2-1/2 "	2042AT - 451	R46451	R40H378	R40H7055	R40H2588	R40H2589
6,600lb. GVW	Fd	GM		728A - D52	MD52	R40H5004DP	R40H5500	NR	NR
	Fd	GM		728A - D52	MD52	R40H5004DP	R40H5500	NR	NR
8,600 lb. GVW	Fd	GM		7084A - D153	MD392	R40H5004DP	R40H5500	NR	NR
	Fd	GM		7084A - D153	MD392	R40H5004DP	R40H5500	NR	NR
1981									
	Ra	GM	11-5/32" x 2-3/4 "	2073TT - 473	R46473	R40H369	R40H4072DP[278]	R40H2586	R40H2587
	Ra	GM	11-5/32" x 2-3/4 "	2073TT - 473	R46473	R40H369	R40H4072DP[278]	R40H2586	R40H2587
	Ra	GM	13 " x 2-1/2 "	2042AT - 451	R46451	R40H378	R40H7055	R40H2588	R40H2589
	Ra	GM	13 " x 2-1/2 "	2042AT - 451	R46451	R40H378	R40H7055	R40H2588	R40H2589
6,600lb. GVW	Fd	GM		728A - D52	MD52	R40H5004DP	R40H5500	NR	NR
	Fd	GM		728A - D52	MD52	R40H5004DP	R40H5500	NR	NR
8,600 lb. GVW	Fd	GM		7084A - D153	MD392	R40H5004DP	R40H5500	NR	NR
	Fd	GM		7084A - D153	MD392	R40H5004DP	R40H5500	NR	NR
1980									
	Fd	GM		728A - D52	MD52	R40H5004DP	R40H5500	NR	NR
	Fd	GM		728A - D52	MD52	R40H5004DP	R40H5500	NR	NR
	Ra	GM	11-5/32" x 2-3/4 "	2073TT - 473	R46473	R40H369	R40H4072DP[278]	R40H2586	R40H2587
	Ra	GM	11-5/32" x 2-3/4 "	2073TT - 473	R46473	R40H369	R40H4072DP[278]	R40H2586	R40H2587
	Ra	GM	13 " x 2-1/2 "	2042AT - 451	R46451	R40H378	R40H7055	R40H2588	R40H2589
	Ra	GM	13 " x 2-1/2 "	2042AT - 451	R46451	R40H378	R40H7055	R40H2588	R40H2589
Optional	Fd	GM		7084A - D153	MD392	R40H5004DP	R40H5500	NR	NR
	Fd	GM		7084A - D153	MD392	R40H5004DP	R40H5500	NR	NR
1979									
	Fd	GM		728A - D52	MD52	R40H5004DP	R40H5500	NR	NR
	Fd	GM		728A - D52	MD52	R40H5004DP	R40H5500	NR	NR
	Ra	GM	11-5/32" x 2-3/4 "	2073TT - 473	R46473	R40H369	R40H4072DP[278]	R40H2586	R40H2587
	Ra	GM	11-5/32" x 2-3/4 "	2073TT - 473	R46473	R40H369	R40H4072DP[278]	R40H2586	R40H2587
	Ra	GM	13 " x 2-1/2 "	2042AT - 451	R46451	R40H378	R40H7055	R40H2588	R40H2589
	Ra	GM	13 " x 2-1/2 "	2042AT - 451	R46451	R40H378	R40H7055	R40H2588	R40H2589
Optional	Fd	GM		7084A - D153	MD392	R40H5004DP	R40H5500	NR	NR

35 - R44141049 is rotor only, for hub only use E-8394

278 - For Heavy Duty version use E-11287

282 - 10 1/2" Ring Gear, First Design; Use 3 3/8" Outside Diameter Axle Tubes

283 - 4 5/8" Drum Width

293 - With 9 1/2" Ring Gear and 6 3/8" Drum Width

294 - With 9 1/2" Ring Gear and 4 5/8" Drum Width

MERITOR DRUM OR ROTOR NO.	CALIPER OR CYLINDER BORE SIZE	MERITOR CALIPER OR WHEEL CYLINDER (LEFT)	MERITOR CALIPER OR WHEEL CYLINDER (RIGHT)	MERITOR CALIPER OR WHEEL CYLINDER REPAIR KIT	MERITOR CALIPER PISTON	MERITOR MASTER CYLINDER	MERITOR MASTER CYLINDER KIT	MERITOR BRAKE HOSE (LEFT)	MERITOR BRAKE HOSE (RIGHT)
									GMC / CHEV(Cont.)
									K-2500 SERIES-3/4 TON PICKUP AND SUBURBAN 4WD(Cont.)
R44140449[293]	1-1/16 "	R4133709	R4133709	N/A	NR	-	-	-	-
R44140449[293]	1-1/16 "	R4133709	R4133709	N/A	NR	-	-	-	-
R44141049[35]	2-15/16 "	R42R55206	R42R55205	R4066848	R4090013S	-	-	-	-
R44141049[35]	2-15/16 "	R42R55206	R42R55205	R4066848	R4090013S	-	-	-	-
R44141049[35]	3-5/32 "	R42R55382	R42R55381	R4066557	R4090068S	-	-	-	-
R44141049[35]	3-5/32 "	R42R55382	R42R55381	R4066557	R4090068S	-	-	-	-
R44140450	1 "	R4133608	R4133608	R4166620	NR	-	-	-	-
R44140450	1 "	R4133608	R4133608	R4166620	NR	-	-	-	-
R44140449[293]	1-1/16 "	R4133709	R4133709	N/A	NR	-	-	-	-
R44140449[293]	1-1/16 "	R4133709	R4133709	N/A	NR	-	-	-	-
R44141049[35]	2-15/16 "	R42R55206	R42R55205	R4066848	R4090013S	-	-	-	-
R44141049[35]	2-15/16 "	R42R55206	R42R55205	R4066848	R4090013S	-	-	-	-
R44141049[35]	3-5/32 "	R42R55382	R42R55381	R4066557	R4090068S	-	-	-	-
R44141049[35]	3-5/32 "	R42R55382	R42R55381	R4066557	R4090068S	-	-	-	-
R44140450	1 "	R4133608	R4133608	R4166620	NR	-	-	-	-
R44140408[283]	1 "	R4133608	R4133608	R4166620	NR	-	-	-	-
R44140450	1 "	R4133608	R4133608	R4166620	NR	-	-	-	-
R44140408[283]	1 "	R4133608	R4133608	R4166620	NR	-	-	-	-
R44140449[293]	1-1/16 "	R4133709	R4133709	N/A	NR	-	-	-	-
R44140409[294]	1-1/16 "	R4133709	R4133709	N/A	NR	-	-	-	-
R44140449[293]	1-1/16 "	R4133709	R4133709	N/A	NR	-	-	-	-
R44140409[294]	1-1/16 "	R4133709	R4133709	N/A	NR	-	-	-	-
R44141049[35]	2-15/16 "	R42R55208	R42R55207	R4066848	R4090013S	-	-	-	-
R44141049[35]	2-15/16 "	R42R55206	R42R55205	R4066848	R4090013S	-	-	-	-
R44141049[35]	3-5/32 "	R42R55382	R42R55381	R4066557	R4090068S	-	-	-	-
R44141049[35]	3-5/32 "	R42R55382	R42R55381	R4066557	R4090068S	-	-	-	-
R44140408[283]	1 "	R4133608	R4133608	R4166620	NR	-	-	-	-
R44140408[283]	1 "	R4133608	R4133608	R4166620	NR	-	-	-	-
R44140409[294]	1-1/16 "	R4133709	R4133709	N/A	NR	-	-	-	-
R44140409[294]	1-1/16 "	R4133709	R4133709	N/A	NR	-	-	-	-
R44141049[35]	2-15/16 "	R42R55206	R42R55205	R4066848	R4090013S	-	-	-	-
R44141049[35]	2-15/16 "	R42R55208	R42R55207	R4066848	R4090013S	-	-	-	-
R44141049[35]	3-5/32 "	R42R55382	R42R55381	R4066557	R4090068S	-	-	-	-
R44141049[35]	3-5/32 "	R42R55382	R42R55381	R4066557	R4090068S	-	-	-	-
R44140408[283]	1 "	R4133608	R4133608	R4166620	NR	-	-	-	-
R44140408[283]	1 "	R4133608	R4133608	R4166620	NR	-	-	-	-
R44140409[294]	1-1/16 "	R4133709	R4133709	N/A	NR	-	-	-	-
R44140409[294]	1-1/16 "	R4133709	R4133709	N/A	NR	-	-	-	-
R44141049[35]	2-15/16 "	R42R55208	R42R55207	R4066848	R4090013S	-	-	-	-
R44141049[35]	2-15/16 "	R42R55206	R42R55205	R4066848	R4090013S	-	-	-	-
R44141049[35]	3-5/32 "	R42R55382	R42R55381	R4066557	R4090068S	-	-	-	-
R44141049[35]	3-5/32 "	R42R55382	R42R55381	R4066557	R4090068S	-	-	-	-
R44141049[35]	2-15/16 "	R42R55061	R42R55060	R4066848	R4090013S	-	-	-	-
R44141049[35]	2-15/16 "	R42R55208	R42R55207	R4066848	R4090013S	-	-	-	-
N/A		-	-	N/A	NR	-	-	-	-
N/A		-	-	N/A	NR	-	-	-	-
N/A		-	-	N/A	NR	-	-	-	-
R44140363[282]		-	-	N/A	NR	-	-	-	-
N/A	3-5/32 "	R42R55382	R42R55381	R4066557	R4090068S	-	-	-	-
N/A	3-5/32 "	R42R55382	R42R55381	R4066557	R4090068S	-	-	-	-
R44141049[35]	2-15/16 "	R42R55208	R42R55207	R4066848	R4090013S	-	-	-	-
R44141049[35]	2-15/16 "	R42R55061	R42R55060	R4066848	R4090013S	-	-	-	-
N/A		-	-	N/A	NR	-	-	-	-
N/A		-	-	N/A	NR	-	-	-	-
N/A		-	-	N/A	NR	-	-	-	-
R44140363[282]		-	-	N/A	NR	-	-	-	-
N/A	3-5/32 "	R42R55382	R42R55381	R4066557	R4090068S	-	-	-	-

MAKE MODEL YEAR AXLE CODE AXLE WEIGHT	AXLE & BRK. TYPE	BRK. MFG.	BRAKE SIZE	FMSI	MERITOR DISC PAD OR BRAKE SHOE	MERITOR GUIDE PIN OR RETURN SPRING KIT	MERITOR CALIPER HWD. KIT OR RETURN SPRING KIT	MERITOR ADJUSTER KIT (LEFT WHEEL)	MERITOR ADJUSTER KIT (RIGHT WHEEL)
GMC / CHEV(Cont.)									
K-2500 SERIES-3/4 TON PICKUP AND SUBURBAN 4WD(Cont.)									
1979									
	Fd	GM		7084A - D153	MD392	R40H5004DP	R40H5500	NR	NR
1978									
	Fd	GM		728A - D52	MD52	R40H5004DP	R40H5500	NR	NR
	Fd	GM		728A - D52	MD52	R40H5004DP	R40H5500	NR	NR
	Ra	GM	11-5/32" x 2-3/4 "	2073TT - 473	R46473	R40H369	R40H4072DP[278]	R40H2586	R40H2587
	Ra	GM	11-5/32" x 2-3/4 "	2073TT - 473	R46473	R40H369	R40H4072DP[278]	R40H2586	R40H2587
	Ra	GM	13 " x 2-1/2 "	2042AT - 451	R46451	R40H378	R40H7055	R40H2588	R40H2589
	Ra	GM	13 " x 2-1/2 "	2042AT - 451	R46451	R40H378	R40H7055	R40H2588	R40H2589
Optional	Fd	GM		7084A - D153	MD392	R40H5004DP	R40H5500	NR	NR
	Fd	GM		7084A - D153	MD392	R40H5004DP	R40H5500	NR	NR
1977									
	Fd	GM		728A - D52	MD52	R40H5004DP	R40H5500	NR	NR
	Fd	GM		728A - D52	MD52	R40H5004DP	R40H5500	NR	NR
Optional	Fd	GM		7084A - D153	MD392	R40H5004DP	R40H5500	NR	NR
	Fd	GM		7084A - D153	MD392	R40H5004DP	R40H5500	NR	NR
1976									
	Fd	GM		728A - D52	MD52	R40H5004DP	R40H5500	NR	NR
	Fd	GM		728A - D52	MD52	R40H5004DP	R40H5500	NR	NR
Optional	Fd	GM		7084A - D153	MD392	R40H5004DP	R40H5500	NR	NR
	Fd	GM		7084A - D153	MD392	R40H5004DP	R40H5500	NR	NR
K-3500 SERIES-1 TON PICKUP AND SUBURBAN 4WD									
1997 Dual Rear Wheels or Extended Cab	Fd	GM		7339 - D459	MD459	R40H5083	R40H5788	NR	NR
	Ra	GM	13 " x 3-1/2 "	2157T - S656	R46452	R40H378	R40H7055	R40H2588	R40H2589
Single Rear Wheels	Fd	GM		7260 - D370	MD370	R40H5083	R40H5707	NR	NR
	Ra	GM	13 " x 2-1/2 "	2042T - S655	R46451	R40H378	R40H7055	R40H2588	R40H2589
1996 Dual Rear Wheels or Extended Cab	Fd	GM		7339 - D459	MD459	R40H5083	R40H5788	NR	NR
	Ra	GM	13 " x 3-1/2 "	2157T - S656	R46452	R40H378	R40H7055	R40H2588	R40H2589
Single Rear Wheels	Fd	GM		7260 - D370	MD370	R40H5083	R40H5707	NR	NR
	Ra	GM	13 " x 2-1/2 "	2042T - S655	R46451	R40H378	R40H7055	R40H2588	R40H2589
1995 Dual Rear Wheels or Extended Cab	Fd	GM		7339 - D459	MD459	R40H5083	R40H5788	NR	NR
	Ra	GM	13 " x 3-1/2 "	2157T - S656	R46452	R40H378	R40H7055	R40H2588	R40H2589
Single Rear Wheels	Fd	GM		7260 - D370	MD370	R40H5083	R40H5707	NR	NR
	Ra	GM	13 " x 2-1/2 "	2042T - S655	R46451	R40H378	R40H7055	R40H2588	R40H2589
1994									
	Fd	GM		7260 - D370	MD370	R40H5083	R40H5707	NR	NR
	Fd	GM		7339 - D459	MD459	R40H5083	R40H5788	NR	NR
	Fd	GM		7339 - D459	MD459	R40H5083	R40H5788	NR	NR
	Fd	GM		7260 - D370	MD370	R40H5083	R40H5707	NR	NR
Dual Rear Wheels or Extended Cab 9,000, 9,200 lb. GVW	Ra	GM	13 " x 3-1/2 "	2157T - S656	R46452	R40H378	R40H7055	R40H2588	R40H2589
	Ra	GM	13 " x 3-1/2 "	2157T - S656	R46452	R40H378	R40H7055	R40H2588	R40H2589
	Ra	GM	13 " x 3-1/2 "	2157T - S656	R46452	R40H378	R40H7055	R40H2588	R40H2589
	Ra	GM	13 " x 3-1/2 "	2157T - S656	R46452	R40H378	R40H7055	R40H2588	R40H2589
Single Rear Wheels 9,000, 9,200 lb. GVW	Ra	GM	13 " x 2-1/2 "	2042T - S655	R46451	R40H378	R40H7055	R40H2588	R40H2589
	Ra	GM	13 " x 2-1/2 "	2042T - S655	R46451	R40H378	R40H7055	R40H2588	R40H2589
Dual Rear Wheels or Extended Cab 10,000, 11,000, 12,000lb. GVW	Ra	GM	13 " x 3-1/2 "	2157T - S656	R46452	R40H378	R40H7055	R40H2588	R40H2589
	Ra	GM	13 " x 3-1/2 "	2157T - S656	R46452	R40H378	R40H7055	R40H2588	R40H2589
1993									
	Fd	GM		7339 - D459	MD459	R40H5083	R40H5788	NR	NR
	Fd	GM		7260 - D370	MD370	R40H5083	R40H5707	NR	NR
	Ra	GM	13 " x 2-1/2 "	2042T - S655	R46451	R40H378	R40H7055	R40H2588	R40H2589
	Ra	GM	13 " x 3-1/2 "	2157T - S656	R46452	R40H378	R40H7055	R40H2588	R40H2589

35 - R44141049 is rotor only, for hub only use E-8394
53 - Power Brakes
65 - 135.5", 159.5" Wheel Base
69 - Hose on Rear Axle Housing
278 - For Heavy Duty version use E-11287
280 - 10 1/2" Ring Gear
282 - 10 1/2" Ring Gear, First Design; Use 3 3/8" Outside Diameter Axle Tubes
309 - Power Brakes, Hydroboost
405 - Rotor Only

MERITOR DRUM OR ROTOR NO.	CALIPER OR CYLINDER BORE SIZE	MERITOR CALIPER OR WHEEL CYLINDER (LEFT)	MERITOR CALIPER OR WHEEL CYLINDER (RIGHT)	MERITOR CALIPER OR WHEEL CYLINDER REPAIR KIT	MERITOR CALIPER PISTON	MERITOR MASTER CYLINDER	MERITOR MASTER CYLINDER KIT	MERITOR BRAKE HOSE (LEFT)	MERITOR BRAKE HOSE (RIGHT)
									GMC / CHEV(Cont.)
									K-2500 SERIES-3/4 TON PICKUP AND SUBURBAN 4WD(Cont.)
N/A	3-5/32 "	R42R55382	R42R55381	R4066557	R4090068S	-	-	-	-
R44141049[35]	2-15/16 "	R42R55061	R42R55060	R4066848	R4090013S	-	-	-	-
R44141049[35]	2-15/16 "	R42R55208	R42R55207	R4066848	R4090013S	-	-	-	-
N/A		-	-	N/A	NR	-	-	-	-
N/A		-	-	N/A	NR	-	-	-	-
N/A		-	-	N/A	NR	-	-	-	-
R44140363[282]		-	-	N/A	NR	-	-	-	-
N/A	3-5/32 "	R42R55382	R42R55381	R4066557	R4090068S	-	-	-	-
N/A	3-5/32 "	R42R55382	R42R55381	R4066557	R4090068S	-	-	-	-
R44141049[35]	2-15/16 "	R42R55208	R42R55207	R4066848	R4090013S	-	-	-	-
R44141049[35]	2-15/16 "	R42R55061	R42R55060	R4066848	R4090013S	-	-	-	-
N/A	3-5/32 "	R42R55382	R42R55381	R4066557	R4090068S	-	-	-	-
N/A	3-5/32 "	R42R55382	R42R55381	R4066557	R4090068S	-	-	-	-
R44141049[35]	2-15/16 "	R42R55208	R42R55207	R4066848	R4090013S	-	-	-	-
R44141049[35]	2-15/16 "	R42R55061	R42R55060	R4066848	R4090013S	-	-	-	-
N/A	3-5/32 "	R42R55382	R42R55381	R4066557	R4090068S	-	-	-	-
N/A	3-5/32 "	R42R55382	R42R55381	R4066557	R4090068S	-	-	-	-
									K-3500 SERIES-1 TON PICKUP AND SUBURBAN 4WD
R44141770[405]	3-25/32 "	R42R55687	R42R55688	R4066211	R4090188S	R4110376[309]	N/A	R4578514	R4578513
N/A	1-3/16 "	R4133708	R4133708	N/A	NR	-	-	R4577765	R4577765
R44141477[405]	3-5/32 "	R42R55497	R42R55496	R4066330	R4090101S	R4110376[309]	N/A	R4578514	R4578513
N/A	1-1/16 "	R4133709	R4133709	N/A	NR	-	-	R4577765	R4577765
R44141770[405]	3-25/32 "	R42R55687	R42R55688	R4066211	R4090188S	R4110376[309]	N/A	R4578403	R4578460
N/A	1-3/16 "	R4133708	R4133708	N/A	NR	-	-	R4577765	R4577765
R44141477[405]	3-5/32 "	R42R55497	R42R55496	R4066330	R4090101S	R4110376[309]	N/A	R4578403	R4578460
N/A	1-1/16 "	R4133709	R4133709	N/A	NR	-	-	R4577765	R4577765
R44141770[405]	3-25/32 "	R42R55687	R42R55688	R4066211	R4090188S	R4110376[309]	N/A	R4578790	R4578392
N/A	1-3/16 "	R4133708	R4133708	N/A	NR	-	-	R4578360[69]	R4578360
R44141477[405]	3-5/32 "	R42R55497	R42R55496	R4066330	R4090101S	R4110376[309]	N/A	R4578790	R4578392
N/A	1-1/16 "	R4133709	R4133709	N/A	NR	-	-	N/A	N/A
R44141477[405]	3-5/32 "	R42R55497	R42R55496	R4066330	R4090101S	R4112220[309]	R4122141	R4578224	R4578787
R44141770[405]	3-25/32 "	R42R55687	R42R55688	R4066211	R4090188S	R4112220[309]	R4122141	R4578790	R4578392
R44141770[405]	3-25/32 "	R42R55687	R42R55688	R4066211	R4090188S	R4113022[53]	R4122437	R4578790	R4578392
R44141477[405]	3-5/32 "	R42R55497	R42R55496	R4066330	R4090101S	R4113022[53]	R4122437	R4578224	R4578787
R44140387	1-3/16 "	R4133708	R4133708	R4166872	NR	-	-	R4578360[69]	R4578360
R44140387	1-3/16 "	R4133708	R4133708	R4166872	NR	-	-	R4578360[65]	R4578360
R44140619	1-3/16 "	R4133708	R4133708	R4166872	NR	-	-	R4578360[69]	R4578360
R44140619	1-3/16 "	R4133708	R4133708	R4166872	NR	-	-	R4578360[65]	R4578360
R44140363[282]	1-1/16 "	R4133709	R4133709	N/A	NR	-	-	R4577765	R4577765
R44140363[282]	1-1/16 "	R4133709	R4133709	N/A	NR	-	-	R4578360[65]	R4578360
R44140388[280]	1-3/16 "	R4133708	R4133708	R4166872	NR	-	-	R4578360[69]	R4578360
R44140388[280]	1-3/16 "	R4133708	R4133708	R4166872	NR	-	-	R4578360[65]	R4578360
R44141770[405]	3-25/32 "	R42R55687	R42R55688	R4066211	R4090188S	R4113022[53]	R4122437	R4578790	R4578392
R44141477[405]	3-5/32 "	R42R55497	R42R55496	R4066330	R4090101S	R4112220[309]	R4122141	R4578224	R4578787
R44140363[282]	1-1/16 "	R4133709	R4133709	N/A	NR	-	-	R4577765	R4577765
R44140388[280]	1-3/16 "	R4133708	R4133708	R4166872	NR	-	-	R4577765	R4577765

MAKE MODEL YEAR AXLE CODE AXLE WEIGHT	AXLE & BRK. TYPE	BRK. MFG.	BRAKE SIZE	FMSI	MERITOR DISC PAD OR BRAKE SHOE	MERITOR GUIDE PIN OR RETURN SPRING KIT	MERITOR CALIPER HWD. KIT OR RETURN SPRING KIT	MERITOR ADJUSTER KIT (LEFT WHEEL)	MERITOR ADJUSTER KIT (RIGHT WHEEL)
GMC / CHEV(Cont.)									
K-3500 SERIES-1 TON PICKUP AND SUBURBAN 4WD(Cont.)									
1993									
	Ra	GM	13 " x 3-1/2 "	2157T - S656	R46452	R40H378	R40H7055	R40H2588	R40H2589
1992									
	Fd	GM		7339 - D459	MD459	R40H5083	R40H5788	NR	NR
	Fd	GM		7260 - D370	MD370	R40H5083	R40H5707	NR	NR
	Fd	GM		7260 - D370	MD370	R40H5083	R40H5707	NR	NR
	Fd	GM		7339 - D459	MD459	R40H5083	R40H5788	NR	NR
	Ra	GM	13 " x 2-1/2 "	2042AT - 451	R46451	R40H378	R40H7055	R40H2588	R40H2589
	Ra	GM	13 " x 2-1/2 "	2042AT - 451	R46451	R40H378	R40H7055	R40H2588	R40H2589
	Ra	GM	13 " x 3-1/2 "	2157T - 452	R46452	R40H378	R40H7055	R40H2588	R40H2589
	Ra	GM	13 " x 3-1/2 "	2157T - 452	R46452	R40H378	R40H7055	R40H2588	R40H2589
	Ra	GM	13 " x 3-1/2 "	2157T - 452	R46452	R40H378	R40H7055	R40H2588	R40H2589
	Ra	GM	13 " x 3-1/2 "	2157T - 452	R46452	R40H378	R40H7055	R40H2588	R40H2589
	Ra	GM	13 " x 3-1/2 "	2157T - 452	R46452	R40H378	R40H7055	R40H2588	R40H2589
	Ra	GM	13 " x 3-1/2 "	2157T - 452	R46452	R40H378	R40H7055	R40H2588	R40H2589
1991									
	Fd	GM		7339 - D459	MD459	R40H5083	R40H5788	NR	NR
	Fd	GM		7260 - D370	MD370	R40H5083	R40H5707	NR	NR
	Fd	GM		7339 - D459	MD459	R40H5083	R40H5788	NR	NR
	Ra	GM	13 " x 2-1/2 "	2042AT - 451	R46451	R40H378	R40H7055	R40H2588	R40H2589
	Ra	GM	13 " x 2-1/2 "	2042AT - 451	R46451	R40H378	R40H7055	R40H2588	R40H2589
	Ra	GM	13 " x 3-1/2 "	2157T - 452	R46452	R40H378	R40H7055	R40H2588	R40H2589
	Ra	GM	13 " x 3-1/2 "	2157T - 452	R46452	R40H378	R40H7055	R40H2588	R40H2589
	Ra	GM	13 " x 3-1/2 "	2157T - 452	R46452	R40H378	R40H7055	R40H2588	R40H2589
	Ra	GM	13 " x 3-1/2 "	2157T - 452	R46452	R40H378	R40H7055	R40H2588	R40H2589
	Ra	GM	13 " x 3-1/2 "	2157T - 452	R46452	R40H378	R40H7055	R40H2588	R40H2589
	Ra	GM	13 " x 3-1/2 "	2157T - 452	R46452	R40H378	R40H7055	R40H2588	R40H2589
1990									
Dual Rear Wheels	Fd	GM		7339 - D459	MD459	R40H5083	R40H5788	NR	NR
	Ra	GM	13 " x 3-1/2 "	2157T - 452	R46452	R40H378	R40H7055	R40H2588	R40H2589
Single Rear Wheels	Fd	GM		7260 - D370	MD370	R40H5083	R40H5707	NR	NR
	Ra	GM	13 " x 2-1/2 "	2042AT - 451	R46451	R40H378	R40H7055	R40H2588	R40H2589
	Ra	GM	13 " x 2-1/2 "	2042AT - 451	R46451	R40H378	R40H7055	R40H2588	R40H2589
1989									
	Fd	GM		7260 - D370	MD370	R40H5083	R40H5707	NR	NR
	Ra	GM	13 " x 2-1/2 "	2042AT - 451	R46451	R40H378	R40H7055	R40H2588	R40H2589
	Ra	GM	13 " x 2-1/2 "	2042AT - 451	R46451	R40H378	R40H7055	R40H2588	R40H2589
	Ra	GM	13 " x 3-1/2 "	2157T - 452	R46452	R40H378	R40H7055	R40H2588	R40H2589
1988									
	Fd	GM		7260 - D370	MD370	R40H5083	R40H5707	NR	NR
	Ra	GM	13 " x 2-1/2 "	2042AT - 451	R46451	R40H378	R40H7055	R40H2588	R40H2589
	Ra	GM	13 " x 2-1/2 "	2042AT - 451	R46451	R40H378	R40H7055	R40H2588	R40H2589
	Ra	GM	13 " x 3-1/2 "	2157T - 452	R46452	R40H378	R40H7055	R40H2588	R40H2589
1986									
	Fd	BX		7081 - D149	MD149	R40H5010	R40H5529	NR	NR
	Ra	GM	13 " x 3-1/2 "	2157T - 452	R46452	R40H378	R40H7055	R40H2588	R40H2589
	Ra	GM	13 " x 3-1/2 "	2157T - 452	R46452	R40H378	R40H7055	R40H2588	R40H2589
1985									
	Fd	BX		7081 - D149	MD149	R40H5010	R40H5529	NR	NR
	Fd	BX		7081 - D149	MD149	R40H5010	R40H5529	NR	NR
	Ra	GM	13 " x 3-1/2 "	2157T - 452	R46452	R40H378	R40H7055	R40H2588	R40H2589
	Ra	GM	13 " x 3-1/2 "	2157T - 452	R46452	R40H378	R40H7055	R40H2588	R40H2589
1984									
	Fd	BX		7081 - D149	MD149	R40H5010	R40H5529	NR	NR
	Fd	BX		7081 - D149	MD149	R40H5010	R40H5529	NR	NR
	Ra	GM	13 " x 3-1/2 "	2157T - 452	R46452	R40H378	R40H7055	R40H2588	R40H2589
	Ra	GM	13 " x 3-1/2 "	2157T - 452	R46452	R40H378	R40H7055	R40H2588	R40H2589
1983									
	Fd	BX		7081 - D149	MD149	R40H5010	R40H5529	NR	NR
	Fd	BX		7081 - D149	MD149	R40H5010	R40H5529	NR	NR
	Ra	GM	13 " x 3-1/2 "	2157T - 452	R46452	R40H378	R40H7055	R40H2588	R40H2589
	Ra	GM	13 " x 3-1/2 "	2157T - 452	R46452	R40H378	R40H7055	R40H2588	R40H2589
1982									
	Fd	BX		7081 - D149	MD149	R40H5010	R40H5529	NR	NR

53 - Power Brakes
64 - 131.5", 155.5" Wheel Base
65 - 135.5", 159.5" Wheel Base
69 - Hose on Rear Axle Housing
77 - Hub Casting # 102764
79 - Inboard Mounting
280 - 10 1/2" Ring Gear
282 - 10 1/2" Ring Gear, First Design; Use 3 3/8" Outside Diameter Axle Tubes
293 - With 9 1/2" Ring Gear and 6 3/8" Drum Width

MERITOR DRUM OR ROTOR NO.	CALIPER OR CYLINDER BORE SIZE	MERITOR CALIPER OR WHEEL CYLINDER (LEFT)	MERITOR CALIPER OR WHEEL CYLINDER (RIGHT)	MERITOR CALIPER OR WHEEL CYLINDER REPAIR KIT	MERITOR CALIPER PISTON	MERITOR MASTER CYLINDER	MERITOR MASTER CYLINDER KIT	MERITOR BRAKE HOSE (LEFT)	MERITOR BRAKE HOSE (RIGHT)
									GMC / CHEV(Cont.)
									K-3500 SERIES-1 TON PICKUP AND SUBURBAN 4WD(Cont.)
R44140388[280]	1-3/16 "	R4133708	R4133708	R4166872	NR	-	-	R4578360[69]	R4578360
N/A	3-25/32 "	R42R55687	R42R55688	R4066211	R4090188S	R4112220[309]	R4122141	R451534[64]	R4577461
R44140267[79]	3-5/32 "	R42R55497	R42R55496	R4066330	R4090101S	R4113022[53]	R4122437	R4578224	R4578787
R44141477[405]	3-5/32 "	R42R55497	R42R55496	R4066330	R4090101S	R4112220[309]	R4122141	R4578224	R4578787
N/A	3-25/32 "	R42R55687	R42R55688	R4066211	R4090188S	R4113022[53]	R4122437	R451534[64]	R4577461
R44140363[282]	1-1/16 "	R4133709	R4133709	N/A	NR	-	-	-	R4578360
R44140363[282]	1-1/16 "	R4133709	R4133709	N/A	NR	-	-	-	R4577765
R44140388[280]	1-3/16 "	R4133708	R4133708	R4166872	NR	-	-	-	R4577765
R44140387	1-3/16 "	R4133708	R4133708	R4166872	NR	-	-	-	R4578360
R44140619	1-3/16 "	R4133708	R4133708	R4166872	NR	-	-	-	R4577765
R44140619	1-3/16 "	R4133708	R4133708	R4166872	NR	-	-	-	R4578360
R44140388[280]	1-3/16 "	R4133708	R4133708	R4166872	NR	-	-	-	R4578360
R44140387	1-3/16 "	R4133708	R4133708	R4166872	NR	-	-	-	R4577765
R44141770[405]	3-25/32 "	R42R55687	R42R55688	R4066211	R4090188S	R4113022[53]	R4122437	R4578224	R4578787
R44141477[405]	3-5/32 "	R42R55497	R42R55496	R4066330	R4090101S	R4113022[53]	R4122437	R4578224	R4578787
R44141770[405]	3-25/32 "	R42R55687	R42R55688	R4066211	R4090188S	R4113022[53]	R4122437	R451534[64]	R4577461
R44140363[282]	1-1/16 "	R4133709	R4133709	N/A	NR	-	-	R4577765	R4577765
R44140363[282]	1-1/16 "	R4133709	R4133709	N/A	NR	-	-	R4577765	R4577765
R44140388[280]	1-3/16 "	R4133708	R4133708	R4166872	NR	-	-	R4578360[65]	R4578360
R44140388[280]	1-3/16 "	R4133708	R4133708	R4166872	NR	-	-	R4578360[65]	R4578360
R44140619	1-3/16 "	R4133708	R4133708	R4166872	NR	-	-	R4578360[65]	R4578360
R44140619	1-3/16 "	R4133708	R4133708	R4166872	NR	-	-	R4578360[65]	R4578360
R44140387	1-3/16 "	R4133708	R4133708	R4166872	NR	-	-	R4578360[65]	R4578360
R44140387	1-3/16 "	R4133708	R4133708	R4166872	NR	-	-	R4578360[65]	R4578360
R44141770[405]	3-25/32 "	R42R55687	R42R55688	R4066211	R4090188S	R4112220[309]	R4122141	R451534[64]	R4577461
R44140388[280]	1-3/16 "	R4133708	R4133708	R4166872	NR	-	-	R4577765	R4577765
R44141477[405]	3-5/32 "	R42R55497	R42R55496	R4066330	R4090101S	R4112220[309]	R4122141	R451534[64]	R4577461
R44140536[280]	1-1/16 "	R4133709	R4133709	N/A	NR	-	-	R4578360[65]	R4578360
R44140363[282]	1-1/16 "	R4133709	R4133709	N/A	NR	-	-	R4578360[65]	R4578360
R44141477[405]	3-5/32 "	R42R55497	R42R55496	R4066330	R4090101S	R4112220[309]	R4122141	R4578224	R4578787
R44140449[293]	1-1/16 "	R4133709	R4133709	N/A	NR	-	-	R4577765	R4577765
R44140536[280]	1-1/16 "	R4133709	R4133709	N/A	NR	-	-	R4577765	R4577765
R44140388[280]	1-3/16 "	R4133708	R4133708	R4166872	NR	-	-	R4577765	R4577765
R44141477[405]	3-5/32 "	R42R55497	R42R55496	R4066330	R4090101S	R4112220[309]	R4122141	R4578224	R4578787
R44140536[280]	1-1/16 "	R4133709	R4133709	N/A	NR	-	-	R4577765	R4577765
R44140449[293]	1-1/16 "	R4133709	R4133709	N/A	NR	-	-	R4577765	R4577765
R44140388[280]	1-3/16 "	R4133708	R4133708	R4166872	NR	-	-	R4577765	R4577765
R44141469[351]	3-3/8 "	R42R55200	R42R55199[346]	R4066780	R4090021	R4111982[314]	N/A	R4577419	R458529
R44140387	1-1/16 "	R4133709	R4133709	N/A	NR	-	-	R4588651	R4588651
R44140388[280]	1-3/16 "	R4133708	R4133708	R4166872	NR	-	-	R4588651	R4588651
R44141468[77]	3-3/8 "	R42R55200	R42R55199[346]	R4066780	R4090021	R4111982[314]	N/A	R4577419	R458529
R44141469[351]	3-3/8 "	R42R55200	R42R55199[346]	R4066780	R4090021	R4111982[314]	N/A	R4577419	R458529
R44140388[280]	1-3/16 "	R4133708	R4133708	R4166872	NR	-	-	R4588651	R4588651
R44140387	1-1/16 "	R4133709	R4133709	N/A	NR	-	-	R4588651	R4588651
R44141469[351]	3-3/8 "	R42R55200	R42R55199[346]	R4066780	R4090021	R4111982[314]	N/A	R4577419	R458529
R44141468[77]	3-3/8 "	R42R55200	R42R55199[346]	R4066780	R4090021	R4111982[314]	N/A	R4577419	R458529
R44140388[280]	1-3/16 "	R4133708	R4133708	R4166872	NR	-	-	R4588651	R4588651
R44140387	1-1/16 "	R4133709	R4133709	N/A	NR	-	-	R4588651	R4588651
R44141469[351]	3-3/8 "	R42R55200	R42R55199[346]	R4066780	R4090021	R4111584[313]	R4122597	R4577419	R458529
R44141468[77]	3-3/8 "	R42R55200	R42R55199[346]	R4066780	R4090021	R4111982[314]	N/A	R4577419	R458529
R44140387	1-3/16 "	R4133708	R4133708	R4166872	NR	-	-	R4588651	R4588651
R44140388[280]	1-3/16 "	R4133708	R4133708	R4166872	NR	-	-	R4588651	R4588651
R44141469[351]	3-3/8 "	R42R55200	R42R55199[346]	R4066780	R4090021	R4111584[313]	R4122597	R4577334	R4577335

309 - Power Brakes, Hydroboost
313 - Power Brakes, 1st Design, Cylinder Stamped 1605
314 - Power Brakes, 2nd Design, Cylinder Stamped 1925
346 - 4500 lb. Casting Number 2238451452, 10mm Inlet
351 - 1/2" Studs, 4500 lb. Axle, Rotor Casting Number 100353, Hub Casting Number 102764
405 - Rotor Only

MAKE MODEL YEAR AXLE CODE AXLE WEIGHT	AXLE & BRK. TYPE	BRK. MFG.	BRAKE SIZE	FMSI	MERITOR DISC PAD OR BRAKE SHOE	MERITOR GUIDE PIN OR RETURN SPRING KIT	MERITOR CALIPER HWD. KIT OR RETURN SPRING KIT	MERITOR ADJUSTER KIT (LEFT WHEEL)	MERITOR ADJUSTER KIT (RIGHT WHEEL)
GMC / CHEV(Cont.)									
K-3500 SERIES-1 TON PICKUP AND SUBURBAN 4WD(Cont.)									
1982									
	Fd	BX		7081 - D149	MD149	R40H5010	R40H5529	NR	NR
	Ra	GM	13 " x 3-1/2 "	2157T - 452	R46452	R40H378	R40H7055	R40H2588	R40H2589
	Ra	GM	13 " x 3-1/2 "	2157T - 452	R46452	R40H378	R40H7055	R40H2588	R40H2589
1981									
	Fd	BX		7081 - D149	MD149	R40H5010	R40H5529	NR	NR
	Fd	BX		7081 - D149	MD149	R40H5010	R40H5529	NR	NR
	Ra	GM	13 " x 3-1/2 "	2157T - 452	R46452	R40H378	R40H7055	R40H2588	R40H2589
	Ra	GM	13 " x 3-1/2 "	2157T - 452	R46452	R40H378	R40H7055	R40H2588	R40H2589
1980									
	Fd	BX		7081 - D149	MD149	R40H5010	R40H5529	NR	NR
	Fd	BX		7081 - D149	MD149	R40H5010	R40H5529	NR	NR
	Fd	BX		7081 - D149	MD149	R40H5010	R40H5529	NR	NR
	Fd	BX		7081 - D149	MD149	R40H5010	R40H5529	NR	NR
	Ra	GM	13 " x 3-1/2 "	2157T - 452	R46452	R40H378	R40H7055	R40H2588	R40H2589
1979									
	Fd	BX		7081 - D149	MD149	R40H5010	R40H5529	NR	NR
	Fd	BX		7081 - D149	MD149	R40H5010	R40H5529	NR	NR
	Ra	GM	13 " x 3-1/2 "	2157T - 452	R46452	R40H378	R40H7055	R40H2588	R40H2589
	Ra	GM	13 " x 3-1/2 "	2157T - 452	R46452	R40H378	R40H7055	R40H2588	R40H2589
1978									
	Fd	BX		7081 - D149	MD149	R40H5010	R40H5529	NR	NR
	Ra	GM	13 " x 3-1/2 "	2157T - 452	R46452	R40H378	R40H7055	R40H2588	R40H2589
1977									
	Fd	BX		7081 - D149	MD149	R40H5010	R40H5529	NR	NR
	Ra	GM	13 " x 3-1/2 "	2157T - 452	R46452	R40H378	R40H7055	R40H2588	R40H2589
LLV POSTAL VEHICLE									
1995									
	Fd	GM		7070A - D154	MD154	R40H5004DP	R40H5536	NR	NR
	Ra	GM	9.5 x 2 "	2117ATT - 514	R468135	R40H367	R40H4019DP	R40H2622	R40H2623
1994									
	Fd	GM		7070A - D154	MD154	R40H5004DP	R40H5536	NR	NR
1993									
	Fd	GM		7070A - D154	MD154	R40H5004DP	R40H5536	NR	NR
1992									
	Fd	GM		7070A - D154	MD154	R40H5004DP	R40H5536	NR	NR
1991									
	Fd	GM		7070A - D154	MD154	R40H5004DP	R40H5536	NR	NR
1990									
	Fd	GM		7070A - D154	MD154	R40H5004DP	R40H5536	NR	NR
1989									
	Fd	GM		7070A - D154	MD154	R40H5004DP	R40H5536	NR	NR
1988									
	Fd	GM		7070A - D154	MD154	R40H5004DP	R40H5536	NR	NR
1987									
	Fd	GM		7070A - D154	MD154	R40H5004DP	R40H5536	NR	NR
P-20, P-2500 SERIES-3/4 TON FORWARD CONTROL									
1989									
	Ra	GM	11-5/32" x 2-3/4 "	2073TT - 473	R46473	R40H369	R40H4072DP[278]	R40H2586	R40H2587
	Ra	GM	11-5/32" x 2-3/4 "	2073TT - 473	R46473	R40H369	R40H4072DP[278]	R40H2586	R40H2587
	Ra	GM	13 " x 2-1/2 "	2042AT - 451	R46451	R40H378	R40H7055	R40H2588	R40H2589
	Ra	GM	13 " x 2-1/2 "	2042AT - 451	R46451	R40H378	R40H7055	R40H2588	R40H2589
7,200 lb. GVW	Fd	GM		728A - D52	MD52	R40H5004DP	R40H5500	NR	NR
	Fd	GM		728A - D52	MD52	R40H5004DP	R40H5500	NR	NR
8,400 lb. GVW	Fd	GM		7280 - D392	MD392	R40H5004DP	R40H5500	NR	NR
	Fd	GM		7280 - D392	MD392	R40H5004DP	R40H5500	NR	NR
1988									
	Ra	GM	11-5/32" x 2-3/4 "	2073TT - 473	R46473	R40H369	R40H4072DP[278]	R40H2586	R40H2587
	Ra	GM	11-5/32" x 2-3/4 "	2073TT - 473	R46473	R40H369	R40H4072DP[278]	R40H2586	R40H2587
	Ra	GM	13 " x 2-1/2 "	2042AT - 451	R46451	R40H378	R40H7055	R40H2588	R40H2589
	Ra	GM	13 " x 2-1/2 "	2042AT - 451	R46451	R40H378	R40H7055	R40H2588	R40H2589

53 - Power Brakes
280 - 10 1/2" Ring Gear
313 - Power Brakes, 1st Design, Cylinder Stamped 1605

77 - Hub Casting # 102764
293 - With 9 1/2" Ring Gear and 6 3/8" Drum Width
346 - 4500 lb. Casting Number 2238451452, 10mm Inlet

278 - For Heavy Duty version use E-11287
312 - Power Brakes, Except Hydroboost
351 - 1/2" Studs, 4500 lb. Axle, Rotor Casting Number 100353, Hub Casting Number 102764

MERITOR DRUM OR ROTOR NO.	CALIPER OR CYLINDER BORE SIZE	MERITOR CALIPER OR WHEEL CYLINDER (LEFT)	MERITOR CALIPER OR WHEEL CYLINDER (RIGHT)	MERITOR CALIPER OR WHEEL CYLINDER REPAIR KIT	MERITOR CALIPER PISTON	MERITOR MASTER CYLINDER	MERITOR MASTER CYLINDER KIT	MERITOR BRAKE HOSE (LEFT)	MERITOR BRAKE HOSE (RIGHT)
									GMC / CHEV(Cont.)
									K-3500 SERIES-1 TON PICKUP AND SUBURBAN 4WD(Cont.)
R44141468[77]	3-3/8 "	R42R55200	R42R55199[346]	R4066780	R4090021	R4111584[313]	R4122597	R4577334	R4577335
R44140387	1-3/16 "	R4133708	R4133708	R4166872	NR	-	-	R4588651	R4588651
R44140388[280]	1-3/16 "	R4133708	R4133708	R4166872	NR	-	-	R4588651	R4588651
R44141469[351]	3-3/8 "	R42R55200	R42R55199[346]	R4066780	R4090021	R4111584[313]	R4122597	R4577334	R4577335
R44141468[77]	3-3/8 "	R42R55200	R42R55199[346]	R4066780	R4090021	R4111584[313]	R4122597	R4577334	R4577335
R44140387	1-3/16 "	R4133708	R4133708	R4166872	NR	-	-	R4588651	R4588651
R44140388[280]	1-3/16 "	R4133708	R4133708	R4166872	NR	-	-	R4588651	R4588651
R44141468[405]	3-3/8 "	R42R55200	R42R55199[346]	R4066780	R4090021	R4111730[312]	R4122203	R4577334	R4577335
R44141468[405]	3-3/8 "	R42R55200	R42R55199[346]	R4066780	R4090021	R4111584[313]	R4122597	R4577334	R4577335
R44141469[351]	3-3/8 "	R42R55200	R42R55199[346]	R4066780	R4090021	R4111730[312]	R4122203	R4577334	R4577335
R44141469[351]	3-3/8 "	R42R55200	R42R55199[346]	R4066780	R4090021	R4111584[313]	R4122597	R4577334	R4577335
R44140388[280]	1-3/16 "	R4133708	R4133708	R4166872	NR	-	-	R4588651	R4588651
R44141469[351]	3-3/8 "	R42R55200	R42R55199[346]	R4066780	R4090021	R4111584[313]	R4122597	R4577334	R4577335
R44141468[77]	3-3/8 "	R42R55200	R42R55199[346]	R4066780	R4090021	R4111730[312]	R4122203	R4577334	R4577335
R44140388[280]	1-3/16 "	R4133708	R4133708	R4166872	NR	-	-	R4588651	R4588651
R44140388[280]	1-3/16 "	R4133708	R4133708	R4166872	NR	-	-	R4588651	R4588651
R44141468[77]	3-3/8 "	R42R55200	R42R55199[346]	R4066780	R4090021	R4111584[313]	R4122597	R4577334	R4577335
R44140388[280]	1-3/16 "	R4133708	R4133708	R4166872	NR	-	-	-	-
R44141468[77]	3-3/8 "	R42R55200	R42R55199[346]	R4066780	R4090021	R4111584[313]	R4122597	R4577334	R4577335
R44140388[280]	1-3/16 "	R4133708	R4133708	R4166872	NR	-	-	-	-
									LLV POSTAL VEHICLE
R44141233[381]	2-1/2 "	R42R55265	R42R55264	R4066715	R4090028S	R4112342[53]	N/A	R4577544	R4577544
N/A		-	-	N/A	NR	-	-	R4577544	R4577544
R44141233[381]	2-1/2 "	R42R55265	R42R55264	R4066715	R4090028S	R4112342[53]	N/A	R4577544	R4577544
R44141233[381]	2-1/2 "	R42R55265	R42R55264	R4066715	R4090028S	R4112342[53]	N/A	R4577544	R4577544
R44141233[381]	2-1/2 "	R42R55265	R42R55264	R4066715	R4090028S	R4112342[53]	N/A	R4577544	R4577544
R44141233[381]	2-1/2 "	R42R55265	R42R55264	R4066715	R4090028S	R4112342[53]	N/A	R4577544	R4577544
R44141233[381]	2-1/2 "	R42R55265	R42R55264	R4066715	R4090028S	R4112342[53]	N/A	R4577544	R4577544
R44141233[381]	2-1/2 "	R42R55265	R42R55264	R4066715	R4090028S	R4112342[53]	N/A	R4577544	R4577544
R44141233[381]	2-1/2 "	R42R55265	R42R55264	R4066715	R4090028S	R4112342[53]	N/A	R4577544	R4577544
									P-20, P-2500 SERIES-3/4 TON FORWARD CONTROL
R44140450	1 "	R4133608	R4133608	R4166620	NR	-	-	-	-
R44140450	1 "	R4133608	R4133608	R4166620	NR	-	-	-	-
R44140449[293]	1-1/16 "	R4133709	R4133709	N/A	NR	-	-	-	-
R44140449[293]	1-1/16 "	R4133709	R4133709	N/A	NR	-	-	-	-
R44141186[381]	2-15/16 "	R42R55208	R42R55207	R4066848	R4090013S	-	-	-	-
R44141186[381]	2-15/16 "	R42R55208	R42R55207	R4066848	R4090013S	-	-	-	-
R44141186[381]	3-5/32 "	R42R55382	R42R55381	R4066557	R4090068S	-	-	-	-
R44141186[381]	3-5/32 "	R42R55382	R42R55381	R4066557	R4090068S	-	-	-	-
R44140450	1 "	R4133608	R4133608	R4166620	NR	-	-	-	-
R44140450	1 "	R4133608	R4133608	R4166620	NR	-	-	-	-
R44140449[293]	1-1/16 "	R4133709	R4133709	N/A	NR	-	-	-	-
R44140449[293]	1-1/16 "	R4133709	R4133709	N/A	NR	-	-	-	-

381 - Rotor and Hub One Piece Assembly W/O ABS Ring 405 - Rotor Only

MAKE MODEL YEAR AXLE CODE AXLE WEIGHT	AXLE & BRK. TYPE	BRK. MFG.	BRAKE SIZE	FMSI	MERITOR DISC PAD OR BRAKE SHOE	MERITOR GUIDE PIN OR RETURN SPRING KIT	MERITOR CALIPER HWD. KIT OR RETURN SPRING KIT	MERITOR ADJUSTER KIT (LEFT WHEEL)	MERITOR ADJUSTER KIT (RIGHT WHEEL)
GMC / CHEV(Cont.)									
P-20, P-2500 SERIES-3/4 TON FORWARD CONTROL(Cont.)									
1988									
7,200 lb. GVW	Fd	GM		728A - D52	MD52	R40H5004DP	R40H5500	NR	NR
	Fd	GM		728A - D52	MD52	R40H5004DP	R40H5500	NR	NR
8,400 lb. GVW	Fd	GM		7280 - D392	MD392	R40H5004DP	R40H5500	NR	NR
	Fd	GM		7280 - D392	MD392	R40H5004DP	R40H5500	NR	NR
1987									
	Fd	GM		728A - D52	MD52	R40H5004DP	R40H5500	NR	NR
	Fd	GM		7214 - D52	MD52	R40H5004DP	R40H5500	NR	NR
	Fd	GM		7214 - D52	MD52	R40H5004DP	R40H5500	NR	NR
	Fd	GM		728A - D52	MD52	R40H5004DP	R40H5500	NR	NR
	Ra	GM	11-5/32" x 2-3/4 "	2073TT - 473	R46473	R40H369	R40H4072DP[278]	R40H2586	R40H2587
	Ra	GM	11-5/32" x 2-3/4 "	2073TT - 473	R46473	R40H369	R40H4072DP[278]	R40H2586	R40H2587
	Ra	GM	13 " x 2-1/2 "	2042AT - 451	R46451	R40H378	R40H7055	R40H2588	R40H2589
	Ra	GM	13 " x 2-1/2 "	2042AT - 451	R46451	R40H378	R40H7055	R40H2588	R40H2589
8,400 lb. GVW	Fd	GM		7084 - D153	MD392	R40H5004DP	R40H5500	NR	NR
	Fd	GM		7084 - D153	MD392	R40H5004DP	R40H5500	NR	NR
1986									
	Fd	GM		728A - D52	MD52	R40H5004DP	R40H5500	NR	NR
	Fd	GM		7214 - D52	MD52	R40H5004DP	R40H5500	NR	NR
	Fd	GM		7214 - D52	MD52	R40H5004DP	R40H5500	NR	NR
	Fd	GM		728A - D52	MD52	R40H5004DP	R40H5500	NR	NR
	Ra	GM	11-5/32" x 2-3/4 "	2073TT - 473	R46473	R40H369	R40H4072DP[278]	R40H2586	R40H2587
	Ra	GM	11-5/32" x 2-3/4 "	2073TT - 473	R46473	R40H369	R40H4072DP[278]	R40H2586	R40H2587
	Ra	GM	13 " x 2-1/2 "	2042AT - 451	R46451	R40H378	R40H7055	R40H2588	R40H2589
	Ra	GM	13 " x 2-1/2 "	2042AT - 451	R46451	R40H378	R40H7055	R40H2588	R40H2589
8,400 lb. GVW	Fd	GM		7084 - D153	MD392	R40H5004DP	R40H5500	NR	NR
	Fd	GM		7084 - D153	MD392	R40H5004DP	R40H5500	NR	NR
1985									
	Fd	GM		728A - D52	MD52	R40H5004DP	R40H5500	NR	NR
	Fd	GM		728A - D52	MD52	R40H5004DP	R40H5500	NR	NR
	Fd	GM		7214 - D52	MD52	R40H5004DP	R40H5500	NR	NR
	Fd	GM		7214 - D52	MD52	R40H5004DP	R40H5500	NR	NR
	Ra	GM	11-5/32" x 2-3/4 "	2073TT - 473	R46473	R40H369	R40H4072DP[278]	R40H2586	R40H2587
	Ra	GM	11-5/32" x 2-3/4 "	2073TT - 473	R46473	R40H369	R40H4072DP[278]	R40H2586	R40H2587
	Ra	GM	13 " x 2-1/2 "	2042AT - 451	R46451	R40H378	R40H7055	R40H2588	R40H2589
	Ra	GM	13 " x 2-1/2 "	2042AT - 451	R46451	R40H378	R40H7055	R40H2588	R40H2589
8,400 lb. GVW	Fd	GM		7084 - D153	MD392	R40H5004DP	R40H5500	NR	NR
	Fd	GM		7084 - D153	MD392	R40H5004DP	R40H5500	NR	NR
1984									
	Fd	GM		728A - D52	MD52	R40H5004DP	R40H5500	NR	NR
	Fd	GM		728A - D52	MD52	R40H5004DP	R40H5500	NR	NR
	Fd	GM		7214 - D52	MD52	R40H5004DP	R40H5500	NR	NR
	Fd	GM		7214 - D52	MD52	R40H5004DP	R40H5500	NR	NR
	Ra	GM	11-5/32" x 2-3/4 "	2073TT - 473	R46473	R40H369	R40H4072DP[278]	R40H2586	R40H2587
	Ra	GM	11-5/32" x 2-3/4 "	2073TT - 473	R46473	R40H369	R40H4072DP[278]	R40H2586	R40H2587
	Ra	GM	13 " x 2-1/2 "	2042AT - 451	R46451	R40H378	R40H7055	R40H2588	R40H2589
	Ra	GM	13 " x 2-1/2 "	2042AT - 451	R46451	R40H378	R40H7055	R40H2588	R40H2589
8,400 lb. GVW	Fd	GM		7084 - D153	MD392	R40H5004DP	R40H5500	NR	NR
	Fd	GM		7084 - D153	MD392	R40H5004DP	R40H5500	NR	NR
1983									
	Fd	GM		7214 - D52	MD52	R40H5004DP	R40H5500	NR	NR
	Fd	GM		7214 - D52	MD52	R40H5004DP	R40H5500	NR	NR
	Fd	GM		728A - D52	MD52	R40H5004DP	R40H5500	NR	NR
	Fd	GM		728A - D52	MD52	R40H5004DP	R40H5500	NR	NR
	Ra	GM	11-5/32" x 2-3/4 "	2073TT - 473	R46473	R40H369	R40H4072DP[278]	R40H2586	R40H2587
	Ra	GM	11-5/32" x 2-3/4 "	2073TT - 473	R46473	R40H369	R40H4072DP[278]	R40H2586	R40H2587
	Ra	GM	13 " x 2-1/2 "	2042AT - 451	R46451	R40H378	R40H7055	R40H2588	R40H2589
	Ra	GM	13 " x 2-1/2 "	2042AT - 451	R46451	R40H378	R40H7055	R40H2588	R40H2589
8,400 lb. GVW	Fd	GM		7084 - D153	MD392	R40H5004DP	R40H5500	NR	NR
	Fd	GM		7084 - D153	MD392	R40H5004DP	R40H5500	NR	NR
1982									
	Fd	GM		7214 - D52	MD52	R40H5004DP	R40H5500	NR	NR
	Fd	GM		728A - D52	MD52	R40H5004DP	R40H5500	NR	NR
	Fd	GM		7214 - D52	MD52	R40H5004DP	R40H5500	NR	NR

278 - For Heavy Duty version use E-11287

293 - With 9 1/2" Ring Gear and 6 3/8" Drum Width

381 - Rotor and Hub One Piece Assembly W/O ABS Ring

MERITOR DRUM OR ROTOR NO.	CALIPER OR CYLINDER BORE SIZE	MERITOR CALIPER OR WHEEL CYLINDER (LEFT)	MERITOR CALIPER OR WHEEL CYLINDER (RIGHT)	MERITOR CALIPER OR WHEEL CYLINDER REPAIR KIT	MERITOR CALIPER PISTON	MERITOR MASTER CYLINDER	MERITOR MASTER CYLINDER KIT	MERITOR BRAKE HOSE (LEFT)	MERITOR BRAKE HOSE (RIGHT)
									GMC / CHEV(Cont.)
									P-20, P-2500 SERIES-3/4 TON FORWARD CONTROL(Cont.)
R44141186[381]	2-15/16 "	R42R55208	R42R55207	R4066848	R4090013S	-	-	-	-
R44141186[381]	2-15/16 "	R42R55208	R42R55207	R4066848	R4090013S	-	-	-	-
R44141186[381]	3-5/32 "	R42R55382	R42R55381	R4066557	R4090068S	-	-	-	-
R44141186[381]	3-5/32 "	R42R55382	R42R55381	R4066557	R4090068S	-	-	-	-
R44141186[381]	2-15/16 "	R42R55208	R42R55207	R4066848	R4090013S	-	-	-	-
R44141186[381]	2-15/16 "	R42R55208	R42R55207	R4066848	R4090013S	-	-	-	-
R44141186[381]	2-15/16 "	R42R55208	R42R55207	R4066848	R4090013S	-	-	-	-
R44141186[381]	2-15/16 "	R42R55208	R42R55207	R4066848	R4090013S	-	-	-	-
R44140450	1 "	R4133608	R4133608	R4166620	NR	-	-	-	-
R44140450	1 "	R4133608	R4133608	R4166620	NR	-	-	-	-
R44140449[293]	1-1/16 "	R4133709	R4133709	N/A	NR	-	-	-	-
R44140449[293]	1-1/16 "	R4133709	R4133709	N/A	NR	-	-	-	-
R44141186[381]	3-5/32 "	R42R55382	R42R55381	R4066557	R4090068S	-	-	-	-
R44141186[381]	3-5/32 "	R42R55382	R42R55381	R4066557	R4090068S	-	-	-	-
R44141186[381]	2-15/16 "	R42R55208	R42R55207	R4066848	R4090013S	-	-	-	-
R44141186[381]	2-15/16 "	R42R55208	R42R55207	R4066848	R4090013S	-	-	-	-
R44141186[381]	2-15/16 "	R42R55208	R42R55207	R4066848	R4090013S	-	-	-	-
R44141186[381]	2-15/16 "	R42R55208	R42R55207	R4066848	R4090013S	-	-	-	-
R44140450	1 "	R4133608	R4133608	R4166620	NR	-	-	-	-
R44140450	1 "	R4133608	R4133608	R4166620	NR	-	-	-	-
R44140449[293]	1-1/16 "	R4133709	R4133709	N/A	NR	-	-	-	-
R44140449[293]	1-1/16 "	R4133709	R4133709	N/A	NR	-	-	-	-
R44141186[381]	3-5/32 "	R42R55382	R42R55381	R4066557	R4090068S	-	-	-	-
R44141186[381]	3-5/32 "	R42R55382	R42R55381	R4066557	R4090068S	-	-	-	-
R44141186[381]	2-15/16 "	R42R55208	R42R55207	R4066848	R4090013S	-	-	-	-
R44141186[381]	2-15/16 "	R42R55208	R42R55207	R4066848	R4090013S	-	-	-	-
R44141186[381]	2-15/16 "	R42R55208	R42R55207	R4066848	R4090013S	-	-	-	-
R44141186[381]	2-15/16 "	R42R55208	R42R55207	R4066848	R4090013S	-	-	-	-
R44140450	1 "	R4133608	R4133608	R4166620	NR	-	-	-	-
R44140450	1 "	R4133608	R4133608	R4166620	NR	-	-	-	-
R44140449[293]	1-1/16 "	R4133709	R4133709	N/A	NR	-	-	-	-
R44140449[293]	1-1/16 "	R4133709	R4133709	N/A	NR	-	-	-	-
R44141186[381]	3-5/32 "	R42R55382	R42R55381	R4066557	R4090068S	-	-	-	-
R44141186[381]	3-5/32 "	R42R55382	R42R55381	R4066557	R4090068S	-	-	-	-
R44141186[381]	2-15/16 "	R42R55208	R42R55207	R4066848	R4090013S	-	-	-	-
R44141186[381]	2-15/16 "	R42R55208	R42R55207	R4066848	R4090013S	-	-	-	-
R44141186[381]	2-15/16 "	R42R55208	R42R55207	R4066848	R4090013S	-	-	-	-
R44141186[381]	2-15/16 "	R42R55208	R42R55207	R4066848	R4090013S	-	-	-	-
R44140450	1 "	R4133608	R4133608	R4166620	NR	-	-	-	-
R44140450	1 "	R4133608	R4133608	R4166620	NR	-	-	-	-
R44140449[293]	1-1/16 "	R4133709	R4133709	N/A	NR	-	-	-	-
R44140449[293]	1-1/16 "	R4133709	R4133709	N/A	NR	-	-	-	-
R44141186[381]	3-5/32 "	R42R55382	R42R55381	R4066557	R4090068S	-	-	-	-
R44141186[381]	3-5/32 "	R42R55382	R42R55381	R4066557	R4090068S	-	-	-	-
R44141186[381]	2-15/16 "	R42R55208	R42R55207	R4066848	R4090013S	-	-	-	-
R44141186[381]	2-15/16 "	R42R55208	R42R55207	R4066848	R4090013S	-	-	-	-
R44141186[381]	2-15/16 "	R42R55208	R42R55207	R4066848	R4090013S	-	-	-	-
R44141186[381]	2-15/16 "	R42R55208	R42R55207	R4066848	R4090013S	-	-	-	-
R44140450	1 "	R4133608	R4133608	R4166620	NR	-	-	-	-
R44140450	1 "	R4133608	R4133608	R4166620	NR	-	-	-	-
R44140449[293]	1-1/16 "	R4133709	R4133709	N/A	NR	-	-	-	-
R44140449[293]	1-1/16 "	R4133709	R4133709	N/A	NR	-	-	-	-
R44141186[381]	3-5/32 "	R42R55382	R42R55381	R4066557	R4090068S	-	-	-	-
R44141186[381]	3-5/32 "	R42R55382	R42R55381	R4066557	R4090068S	-	-	-	-
R44141186[381]	2-15/16 "	R42R55208	R42R55207	R4066848	R4090013S	-	-	-	-
R44141186[381]	2-15/16 "	R42R55208	R42R55207	R4066848	R4090013S	-	-	-	-
R44141186[381]	2-15/16 "	R42R55208	R42R55207	R4066848	R4090013S	-	-	-	-

MAKE MODEL YEAR AXLE CODE AXLE WEIGHT	AXLE & BRK. TYPE	BRK. MFG.	BRAKE SIZE	FMSI	MERITOR DISC PAD OR BRAKE SHOE	MERITOR GUIDE PIN OR RETURN SPRING KIT	MERITOR CALIPER HWD. KIT OR RETURN SPRING KIT	MERITOR ADJUSTER KIT (LEFT WHEEL)	MERITOR ADJUSTER KIT (RIGHT WHEEL)
GMC / CHEV(Cont.)									
P-20, P-2500 SERIES-3/4 TON FORWARD CONTROL(Cont.)									
1982									
	Fd	GM		728A - D52	MD52	R40H5004DP	R40H5500	NR	NR
	Ra	GM	11-5/32" x 2-3/4 "	2073TT - 473	R46473	R40H369	R40H4072DP[278]	R40H2586	R40H2587
	Ra	GM	11-5/32" x 2-3/4 "	2073TT - 473	R46473	R40H369	R40H4072DP[278]	R40H2586	R40H2587
	Ra	GM	13 " x 2-1/2 "	2042AT - 451	R46451	R40H378	R40H7055	R40H2588	R40H2589
	Ra	GM	13 " x 2-1/2 "	2042AT - 451	R46451	R40H378	R40H7055	R40H2588	R40H2589
8,400 lb. GVW	Fd	GM		7084 - D153	MD392	R40H5004DP	R40H5500	NR	NR
	Fd	GM		7084 - D153	MD392	R40H5004DP	R40H5500	NR	NR
1981									
	Fd	GM		7214 - D52	MD52	R40H5004DP	R40H5500	NR	NR
	Fd	GM		728A - D52	MD52	R40H5004DP	R40H5500	NR	NR
	Fd	GM		7214 - D52	MD52	R40H5004DP	R40H5500	NR	NR
	Fd	GM		728A - D52	MD52	R40H5004DP	R40H5500	NR	NR
	Ra	GM	11-5/32" x 2-3/4 "	2073TT - 473	R46473	R40H369	R40H4072DP[278]	R40H2586	R40H2587
	Ra	GM	11-5/32" x 2-3/4 "	2073TT - 473	R46473	R40H369	R40H4072DP[278]	R40H2586	R40H2587
	Ra	GM	13 " x 2-1/2 "	2042AT - 451	R46451	R40H378	R40H7055	R40H2588	R40H2589
	Ra	GM	13 " x 2-1/2 "	2042AT - 451	R46451	R40H378	R40H7055	R40H2588	R40H2589
8,400 lb. GVW	Fd	GM		7084 - D153	MD392	R40H5004DP	R40H5500	NR	NR
	Fd	GM		7084 - D153	MD392	R40H5004DP	R40H5500	NR	NR
1980									
	Fd	GM		7214 - D52	MD52	R40H5004DP	R40H5500	NR	NR
	Fd	GM		728A - D52	MD52	R40H5004DP	R40H5500	NR	NR
	Fd	GM		728A - D52	MD52	R40H5004DP	R40H5500	NR	NR
	Fd	GM		7214 - D52	MD52	R40H5004DP	R40H5500	NR	NR
	Ra	GM	11-5/32" x 2-3/4 "	2073TT - 473	R46473	R40H369	R40H4072DP[278]	R40H2586	R40H2587
	Ra	GM	11-5/32" x 2-3/4 "	2073TT - 473	R46473	R40H369	R40H4072DP[278]	R40H2586	R40H2587
	Ra	GM	13 " x 2-1/2 "	2042AT - 451	R46451	R40H378	R40H7055	R40H2588	R40H2589
	Ra	GM	13 " x 2-1/2 "	2042AT - 451	R46451	R40H378	R40H7055	R40H2588	R40H2589
8,400 lb. GVW	Fd	GM		7084 - D153	MD392	R40H5004DP	R40H5500	NR	NR
	Fd	GM		7084 - D153	MD392	R40H5004DP	R40H5500	NR	NR
1979									
	Fd	GM		728A - D52	MD52	R40H5004DP	R40H5500	NR	NR
	Fd	GM		728A - D52	MD52	R40H5004DP	R40H5500	NR	NR
	Fd	GM		7214 - D52	MD52	R40H5004DP	R40H5500	NR	NR
	Fd	GM		7214 - D52	MD52	R40H5004DP	R40H5500	NR	NR
	Ra	GM	11-5/32" x 2-3/4 "	2073TT - 473	R46473	R40H369	R40H4072DP[278]	R40H2586	R40H2587
	Ra	GM	11-5/32" x 2-3/4 "	2073TT - 473	R46473	R40H369	R40H4072DP[278]	R40H2586	R40H2587
	Ra	GM	13 " x 2-1/2 "	2042AT - 451	R46451	R40H378	R40H7055	R40H2588	R40H2589
	Ra	GM	13 " x 2-1/2 "	2042AT - 451	R46451	R40H378	R40H7055	R40H2588	R40H2589
8,400 lb. GVW	Fd	GM		7084 - D153	MD392	R40H5004DP	R40H5500	NR	NR
	Fd	GM		7084 - D153	MD392	R40H5004DP	R40H5500	NR	NR
1978									
	Fd	GM		728A - D52	MD52	R40H5004DP	R40H5500	NR	NR
	Fd	GM		728A - D52	MD52	R40H5004DP	R40H5500	NR	NR
	Ra	GM	11-5/32" x 2-3/4 "	2073TT - 473	R46473	R40H369	R40H4072DP[278]	R40H2586	R40H2587
	Ra	GM	11-5/32" x 2-3/4 "	2073TT - 473	R46473	R40H369	R40H4072DP[278]	R40H2586	R40H2587
	Ra	GM	13 " x 2-1/2 "	2042AT - 451	R46451	R40H378	R40H7055	R40H2588	R40H2589
	Ra	GM	13 " x 2-1/2 "	2042AT - 451	R46451	R40H378	R40H7055	R40H2588	R40H2589
1977									
	Fd	GM		728A - D52	MD52	R40H5004DP	R40H5500	NR	NR
	Fd	GM		728A - D52	MD52	R40H5004DP	R40H5500	NR	NR
	Ra	GM	11-5/32" x 2-3/4 "	2073TT - 473	R46473	R40H369	R40H4072DP[278]	R40H2586	R40H2587
	Ra	GM	11-5/32" x 2-3/4 "	2073TT - 473	R46473	R40H369	R40H4072DP[278]	R40H2586	R40H2587
	Ra	GM	13 " x 2-1/2 "	2042AT - 451	R46451	R40H378	R40H7055	R40H2588	R40H2589
	Ra	GM	13 " x 2-1/2 "	2042AT - 451	R46451	R40H378	R40H7055	R40H2588	R40H2589
1976									
	Fd	GM		728A - D52	MD52	R40H5004DP	R40H5500	NR	NR
	Fd	GM		728A - D52	MD52	R40H5004DP	R40H5500	NR	NR
	Ra	GM	11-5/32" x 2-3/4 "	2073TT - 473	R46473	R40H369	R40H4072DP[278]	R40H2586	R40H2587
	Ra	GM	11-5/32" x 2-3/4 "	2073TT - 473	R46473	R40H369	R40H4072DP[278]	R40H2586	R40H2587
	Ra	GM	13 " x 2-1/2 "	2042AT - 451	R46451	R40H378	R40H7055	R40H2588	R40H2589
	Ra	GM	13 " x 2-1/2 "	2042AT - 451	R46451	R40H378	R40H7055	R40H2588	R40H2589
P-30, P-3500 SERIES-1 TON FORWARD CONTROL AND MOTOR HOME CHASSIS									
2001 10 1/2 Ring Gear	Ra	GM	13 " x 2-1/2 "	2042T - 451	R46451	R40H378	R40H7055	R40H2588	R40H2589

278 - For Heavy Duty version use E-11287

282 - 10 1/2" Ring Gear, First Design; Use 3 3/8" Outside Diameter Axle Tubes

293 - With 9 1/2" Ring Gear and 6 3/8" Drum Width

381 - Rotor and Hub One Piece Assembly W/O ABS Ring

MERITOR DRUM OR ROTOR NO.	CALIPER OR CYLINDER BORE SIZE	MERITOR CALIPER OR WHEEL CYLINDER (LEFT)	MERITOR CALIPER OR WHEEL CYLINDER (RIGHT)	MERITOR CALIPER OR WHEEL CYLINDER REPAIR KIT	MERITOR CALIPER PISTON	MERITOR MASTER CYLINDER	MERITOR MASTER CYLINDER KIT	MERITOR BRAKE HOSE (LEFT)	MERITOR BRAKE HOSE (RIGHT)
									GMC / CHEV(Cont.)
									P-20, P-2500 SERIES-3/4 TON FORWARD CONTROL(Cont.)
R44141186[381]	2-15/16 "	R42R55208	R42R55207	R4066848	R4090013S	-	-	-	-
R44140450	1 "	R4133608	R4133608	R4166620	NR	-	-	-	-
R44140450	1 "	R4133608	R4133608	R4166620	NR	-	-	-	-
R44140449[293]	1-1/16 "	R4133709	R4133709	N/A	NR	-	-	-	-
R44140449[293]	1-1/16 "	R4133709	R4133709	N/A	NR	-	-	-	-
R44141186[381]	3-5/32 "	R42R55382	R42R55381	R4066557	R4090068S	-	-	-	-
R44141186[381]	3-5/32 "	R42R55382	R42R55381	R4066557	R4090068S	-	-	-	-
R44141186[381]	2-15/16 "	R42R55208	R42R55207	R4066848	R4090013S	-	-	-	-
R44141186[381]	2-15/16 "	R42R55208	R42R55207	R4066848	R4090013S	-	-	-	-
R44141186[381]	2-15/16 "	R42R55208	R42R55207	R4066848	R4090013S	-	-	-	-
R44141186[381]	2-15/16 "	R42R55208	R42R55207	R4066848	R4090013S	-	-	-	-
R44140450	1 "	R4133608	R4133608	R4166620	NR	-	-	-	-
R44140450	1 "	R4133608	R4133608	R4166620	NR	-	-	-	-
R44140449[293]	1-1/16 "	R4133709	R4133709	N/A	NR	-	-	-	-
R44140449[293]	1-1/16 "	R4133709	R4133709	N/A	NR	-	-	-	-
R44141186[381]	3-5/32 "	R42R55382	R42R55381	R4066557	R4090068S	-	-	-	-
R44141186[381]	3-5/32 "	R42R55382	R42R55381	R4066557	R4090068S	-	-	-	-
R44141186[381]	2-15/16 "	R42R55208	R42R55207	R4066848	R4090013S	-	-	-	-
R44141186[381]	2-15/16 "	R42R55208	R42R55207	R4066848	R4090013S	-	-	-	-
R44141186[381]	2-15/16 "	R42R55208	R42R55207	R4066848	R4090013S	-	-	-	-
R44141186[381]	2-15/16 "	R42R55208	R42R55207	R4066848	R4090013S	-	-	-	-
R44140450	1 "	R4133608	R4133608	R4166620	NR	-	-	-	-
R44140450	1 "	R4133608	R4133608	R4166620	NR	-	-	-	-
R44140449[293]	1-1/16 "	R4133709	R4133709	N/A	NR	-	-	-	-
R44140449[293]	1-1/16 "	R4133709	R4133709	N/A	NR	-	-	-	-
R44141186[381]	3-5/32 "	R42R55382	R42R55381	R4066557	R4090068S	-	-	-	-
R44141186[381]	3-5/32 "	R42R55382	R42R55381	R4066557	R4090068S	-	-	-	-
R44141186[381]	2-15/16 "	R42R55208	R42R55207	R4066848	R4090013S	-	-	-	-
R44141186[381]	2-15/16 "	R42R55208	R42R55207	R4066848	R4090013S	-	-	-	-
R44141186[381]	2-15/16 "	R42R55208	R42R55207	R4066848	R4090013S	-	-	-	-
R44141186[381]	2-15/16 "	R42R55208	R42R55207	R4066848	R4090013S	-	-	-	-
R44140450	1 "	R4133608	R4133608	R4166620	NR	-	-	-	-
R44140450	1 "	R4133608	R4133608	R4166620	NR	-	-	-	-
R44140449[293]	1-1/16 "	R4133709	R4133709	N/A	NR	-	-	-	-
R44140449[293]	1-1/16 "	R4133709	R4133709	N/A	NR	-	-	-	-
R44141186[381]	3-5/32 "	R42R55382	R42R55381	R4066557	R4090068S	-	-	-	-
R44141186[381]	3-5/32 "	R42R55382	R42R55381	R4066557	R4090068S	-	-	-	-
R44141186[381]	2-15/16 "	R42R55061	R42R55060	R4066848	R4090013S	-	-	-	-
R44141186[381]	2-15/16 "	R42R55061	R42R55060	R4066848	R4090013S	-	-	-	-
R44140450	1 "	R4133608	R4133608	R4166620	NR	-	-	-	-
R44140450	1 "	R4133608	R4133608	R4166620	NR	-	-	-	-
R44140363[282]	1-1/16 "	R4133709	R4133709	N/A	NR	-	-	-	-
R44140363[282]	1-1/16 "	R4133709	R4133709	N/A	NR	-	-	-	-
R44141186[381]	2-15/16 "	R42R55061	R42R55060	R4066848	R4090013S	-	-	-	-
R44141186[381]	2-15/16 "	R42R55061	R42R55060	R4066848	R4090013S	-	-	-	-
R44140450	1 "	R4133608	R4133608	R4166620	NR	-	-	-	-
R44140450	1 "	R4133608	R4133608	R4166620	NR	-	-	-	-
R44140363[282]	1-1/16 "	R4133709	R4133709	N/A	NR	-	-	-	-
R44140363[282]	1-1/16 "	R4133709	R4133709	N/A	NR	-	-	-	-
R44141186[381]	2-15/16 "	R42R55061	R42R55060	R4066848	R4090013S	-	-	-	-
R44141186[381]	2-15/16 "	R42R55061	R42R55060	R4066848	R4090013S	-	-	-	-
R44140450	1 "	R4133608	R4133608	R4166620	NR	-	-	-	-
R44140450	1 "	R4133608	R4133608	R4166620	NR	-	-	-	-
R44140363[282]	1-1/16 "	R4133709	R4133709	N/A	NR	-	-	-	-
R44140363[282]	1-1/16 "	R4133709	R4133709	N/A	NR	-	-	-	-
									P-30, P-3500 SERIES-1 TON FORWARD CONTROL AND MOTOR HOME CHASSIS
R44140363[282]	1-1/16 "	R4133709	R4133709	N/A	NR	-	-	-	-

MAKE MODEL YEAR AXLE CODE AXLE WEIGHT	AXLE & BRK. TYPE	BRK. MFG.	BRAKE SIZE	FMSI	MERITOR DISC PAD OR BRAKE SHOE	MERITOR GUIDE PIN OR RETURN SPRING KIT	MERITOR CALIPER HWD. KIT OR RETURN SPRING KIT	MERITOR ADJUSTER KIT (LEFT WHEEL)	MERITOR ADJUSTER KIT (RIGHT WHEEL)
GMC / CHEV(Cont.)									
P-30, P-3500 SERIES-1 TON FORWARD CONTROL AND MOTOR HOME CHASSIS(Cont.)									
2001 10 1/2 Ring Gear w/ Dual Rear Wheels	Ra	GM	13 " x 3-1/2 "	2157T - 452	R46452	R40H378	R40H7055	R40H2588	R40H2589
10 1/2 Ring Gear w/ Single Rear Wheels	Ra	GM	13 " x 3-1/2 "	2157T - 452	R46452	R40H378	R40H7055	R40H2588	R40H2589
4 Wheel ABS w/ Rear Drum Brakes 13 1/2	Fd	GM		7081 - D149	MD149	R40H5010	R40H5529	NR	NR
Dual Rear Wheels w/ Rear Drum Brakes	Fd	GM		7081 - D149	MD149	R40H5010	R40H5529	NR	NR
Single Rear Wheels w/ Rear Drum Brakes	Fd	GM		7081 - D149	MD149	R40H5010	R40H5529	NR	NR
w/ 4 Wheel Disc Brake	Fd	BX		7815 - D380	MD184	R40H5010	R40H5522	NR	NR
	Rd	BX		7815 - D380	MD184	R40H5010	R40H5522	NR	NR
2000 10 1/2 Ring Gear	Ra	GM	13 " x 2-1/2 "	2042T - 451	R46451	R40H378	R40H7055	R40H2588	R40H2589
10 1/2 Ring Gear w/ Dual Rear Wheels	Ra	GM	13 " x 3-1/2 "	2157T - 452	R46452	R40H378	R40H7055	R40H2588	R40H2589
10 1/2 Ring Gear w/ Single Rear Wheels	Ra	GM	13 " x 3-1/2 "	2157T - 452	R46452	R40H378	R40H7055	R40H2588	R40H2589
4 Wheel ABS w/ Rear Drum Brakes 13 1/2	Fd	GM		7081 - D149	MD149	R40H5010	R40H5529	NR	NR
Dual Rear Wheels w/ Rear Drum Brakes	Fd	GM		7081 - D149	MD149	R40H5010	R40H5529	NR	NR
Single Rear Wheels w/ Rear Drum Brakes	Fd	GM		7081 - D149	MD149	R40H5010	R40H5529	NR	NR
w/ 4 Wheel Disc Brake	Fd	BX		7815 - D380	MD184	R40H5010	R40H5522	NR	NR
	Rd	BX		7815 - D380	MD184	R40H5010	R40H5522	NR	NR
1999 10 1/2 Ring Gear	Ra	GM	13 " x 2-1/2 "	2042T - 451	R46451	R40H378	R40H7055	R40H2588	R40H2589
10 1/2 Ring Gear w/ Dual Rear Wheels	Ra	GM	13 " x 3-1/2 "	2157T - 452	R46452	R40H378	R40H7055	R40H2588	R40H2589
10 1/2 Ring Gear w/ Single Rear Wheels	Ra	GM	13 " x 3-1/2 "	2157T - 452	R46452	R40H378	R40H7055	R40H2588	R40H2589
4 Wheel ABS w/ Rear Drum Brakes 13 1/2	Fd	GM		7081 - D149	MD149	R40H5010	R40H5529	NR	NR
Dual Rear Wheels w/ Rear Drum Brakes	Fd	GM		7081 - D149	MD149	R40H5010	R40H5529	NR	NR
Single Rear Wheels w/ Rear Drum Brakes	Fd	GM		7081 - D149	MD149	R40H5010	R40H5529	NR	NR
w/ 4 Wheel Disc Brake	Fd	BX		7815 - D380	MD184	R40H5010	R40H5522	NR	NR
	Rd	BX		7815 - D380	MD184	R40H5010	R40H5522	NR	NR
1998 10 1/2 Ring Gear	Ra	GM	13 " x 2-1/2 "	2042T - 451	R46451	R40H378	R40H7055	R40H2588	R40H2589
10 1/2 Ring Gear w/ Dual Rear Wheels	Ra	GM	13 " x 3-1/2 "	2157T - 452	R46452	R40H378	R40H7055	R40H2588	R40H2589
10 1/2 Ring Gear w/ Single Rear Wheels	Ra	GM	13 " x 3-1/2 "	2157T - 452	R46452	R40H378	R40H7055	R40H2588	R40H2589
4 Wheel ABS w/ Rear Drum Brakes 13 1/2	Fd	GM		7081 - D149	MD149	R40H5010	R40H5529	NR	NR
Dual Rear Wheels w/ Rear Drum Brakes	Fd	GM		7081 - D149	MD149	R40H5010	R40H5529	NR	NR
Single Rear Wheels w/ Rear Drum Brakes	Fd	GM		7081 - D149	MD149	R40H5010	R40H5529	NR	NR
w/ 4 Wheel Disc Brake	Fd	BX		7815 - D380	MD184	R40H5010	R40H5522	NR	NR
	Rd	BX		7815 - D380	MD184	R40H5010	R40H5522	NR	NR
1997 10 1/2 Ring Gear	Ra	GM	13 " x 2-1/2 "	2042T - 451	R46451	R40H378	R40H7055	R40H2588	R40H2589
10 1/2 Ring Gear w/ Dual Rear Wheels	Ra	GM	13 " x 3-1/2 "	2157T - 452	R46452	R40H378	R40H7055	R40H2588	R40H2589
10 1/2 Ring Gear w/ Single Rear Wheels	Ra	GM	13 " x 3-1/2 "	2157T - 452	R46452	R40H378	R40H7055	R40H2588	R40H2589
4 Wheel ABS w/ Rear Drum Brakes 13 1/2	Fd	GM		7081 - D149	MD149	R40H5010	R40H5529	NR	NR

67 - 183.5" Wheel Base

280 - 10 1/2" Ring Gear

282 - 10 1/2" Ring Gear, First Design; Use 3 3/8" Outside Diameter Axle Tubes

346 - 4500 lb. Casting Number 2238451452, 10mm Inlet

381 - Rotor and Hub One Piece Assembly W/O ABS Ring

394 - 8 Stud Rotor and Hub one piece Assembly

405 - Rotor Only

MERITOR DRUM OR ROTOR NO.	CALIPER OR CYLINDER BORE SIZE	MERITOR CALIPER OR WHEEL CYLINDER (LEFT)	MERITOR CALIPER OR WHEEL CYLINDER (RIGHT)	MERITOR CALIPER OR WHEEL CYLINDER REPAIR KIT	MERITOR CALIPER PISTON	MERITOR MASTER CYLINDER	MERITOR MASTER CYLINDER KIT	MERITOR BRAKE HOSE (LEFT)	MERITOR BRAKE HOSE (RIGHT)
GMC / CHEV(Cont.)									
P-30, P-3500 SERIES-1 TON FORWARD CONTROL AND MOTOR HOME CHASSIS(Cont.)									
R44140388[280]	1-3/16 "	R4133708	R4133708	R4166872	NR	-	-	-	-
R44140387	1-1/16 "	R4133709	R4133709	N/A	NR	-	-	-	-
R44145368	3-3/8 "	R42R55200	R42R55199[346]	R4066780	R4090021	R4110376	-	-	-
R44141862[394]	3-3/8 "	R42R55200	R42R55199[346]	R4066780	R4090021	R4110376	-	-	-
R44141859[381]	3-3/8 "	R42R55200	R42R55199[346]	R4066780	R4090021	R4110376	-	-	-
R4411316[67]		R42R55805	R42R55805	N/A	N/A	R4513542	-	-	-
R44145028[405]		R42R55805	R42R55805	N/A	N/A	-	-	-	-
R44140363[282]	1-1/16 "	R4133709	R4133709	N/A	NR	-	-	-	-
R44140388[280]	1-3/16 "	R4133708	R4133708	R4166872	NR	-	-	-	-
R44140387	1-1/16 "	R4133709	R4133709	N/A	NR	-	-	-	-
R44145368	3-3/8 "	R42R55200	R42R55199[346]	R4066780	R4090021	R4110376	-	-	-
R44141862[394]	3-3/8 "	R42R55200	R42R55199[346]	R4066780	R4090021	R4110376	-	-	-
R44141859[381]	3-3/8 "	R42R55200	R42R55199[346]	R4066780	R4090021	R4110376	-	-	-
R4411316[67]		R42R55805	R42R55805	N/A	N/A	R4513542	-	-	-
R44145028[405]		R42R55805	R42R55805	N/A	N/A	-	-	-	-
R44140363[282]	1-1/16 "	R4133709	R4133709	N/A	NR	-	-	-	-
R44140388[280]	1-3/16 "	R4133708	R4133708	R4166872	NR	-	-	-	-
R44140387	1-1/16 "	R4133709	R4133709	N/A	NR	-	-	-	-
R44145368	3-3/8 "	R42R55200	R42R55199[346]	R4066780	R4090021	R4110376	-	-	-
R44141862[394]	3-3/8 "	R42R55200	R42R55199[346]	R4066780	R4090021	R4110376	-	-	-
R44141859[381]	3-3/8 "	R42R55200	R42R55199[346]	R4066780	R4090021	R4110376	-	-	-
R4411316[67]		R42R55805	R42R55805	N/A	N/A	R4513542	-	-	-
R44145028[405]		R42R55805	R42R55805	N/A	N/A	-	-	-	-
R44140363[282]	1-1/16 "	R4133709	R4133709	N/A	NR	-	-	-	-
R44140388[280]	1-3/16 "	R4133708	R4133708	R4166872	NR	-	-	-	-
R44140387	1-1/16 "	R4133709	R4133709	N/A	NR	-	-	-	-
R44145368	3-3/8 "	R42R55200	R42R55199[346]	R4066780	R4090021	R4110376	-	-	-
R44141862[394]	3-3/8 "	R42R55200	R42R55199[346]	R4066780	R4090021	R4110376	-	-	-
R44141859[381]	3-3/8 "	R42R55200	R42R55199[346]	R4066780	R4090021	R4110376	-	-	-
R4411316[67]		R42R55805	R42R55805	N/A	N/A	R4513542	-	-	-
R44145028[405]		R42R55805	R42R55805	N/A	N/A	-	-	-	-
R44140363[282]	1-1/16 "	R4133709	R4133709	N/A	NR	-	-	-	-
R44140388[280]	1-3/16 "	R4133708	R4133708	R4166872	NR	-	-	-	-
R44140387	1-1/16 "	R4133709	R4133709	N/A	NR	-	-	-	-
R44145368	3-3/8 "	R42R55200	R42R55199[346]	R4066780	R4090021	R4110376	-	-	-

MAKE MODEL YEAR AXLE CODE AXLE WEIGHT	AXLE & BRK. TYPE	BRK. MFG.	BRAKE SIZE	FMSI	MERITOR DISC PAD OR BRAKE SHOE	MERITOR GUIDE PIN OR RETURN SPRING KIT	MERITOR CALIPER HWD. KIT OR RETURN SPRING KIT	MERITOR ADJUSTER KIT (LEFT WHEEL)	MERITOR ADJUSTER KIT (RIGHT WHEEL)
GMC / CHEV(Cont.)									
P-30, P-3500 SERIES-1 TON FORWARD CONTROL AND MOTOR HOME CHASSIS(Cont.)									
1997									
Dual Rear Wheels w/ Rear Drum Brakes	Fd	GM		7081 - D149	MD149	R40H5010	R40H5529	NR	NR
Single Rear Wheels w/ Rear Drum Brakes	Fd	GM		7081 - D149	MD149	R40H5010	R40H5529	NR	NR
w/ 4 Wheel Disc Brake	Fd	BX		7815 - D380	MD184	R40H5010	R40H5522	NR	NR
	Rd	BX		7815 - D380	MD184	R40H5010	R40H5522	NR	NR
1996									
Motor Home Chassis	Ra	GM	13 " x 3-1/2 "	2157T - 452	R46452	R40H378	R40H7055	R40H2588	R40H2589
	Ra	GM	13 " x 3-1/2 "	2157T - 452	R46452	R40H378	R40H7055	R40H2588	R40H2589
Motor Home Chassis Except I-Beam	Fd	BX		7081 - D149	MD149	R40H5010	R40H5529	NR	NR
	Fd	BX		7081 - D149	MD149	R40H5010	R40H5529	NR	NR
Motor Home Chassis With I-Beam	Fd	BX		7081 - D149	MD149	R40H5010	R40H5529	NR	NR
	Fd	BX		7081 - D149	MD149	R40H5010	R40H5529	NR	NR
Motor Home Chassis With Rear Disc Brake	Fd	BX		7081 - D149	MD149	R40H5010	R40H5529	NR	NR
	Fd	BX		7081 - D149	MD149	R40H5010	R40H5529	NR	NR
	Rd	BX		7081 - D149	MD149	R40H5010	R40H5529	NR	NR
	Rd	BX		7081 - D149	MD149	R40H5010	R40H5529	NR	NR
8,200 lb. GVW	Fd	GM		7084 - D153	MD392	R40H5004DP	R40H5500	NR	NR
	Fd	GM		7084 - D153	MD392	R40H5004DP	R40H5500	NR	NR
	Ra	GM	13 " x 2-1/2 "	2042T - 451	R46451	R40H378	R40H7055	R40H2588	R40H2589
	Ra	GM	13 " x 2-1/2 "	2042T - 451	R46451	R40H378	R40H7055	R40H2588	R40H2589
9,000, 14,500lb. GVW	Fd	BX		7081 - D149	MD149	R40H5010	R40H5529	NR	NR
	Fd	BX		7081 - D149	MD149	R40H5010	R40H5529	NR	NR
	Rd	BX		7081 - D149	MD149	R40H5010	R40H5529	NR	NR
	Rd	BX		7081 - D149	MD149	R40H5010	R40H5529	NR	NR
Dual Rear Wheels 9,000, 14,500lb. GVW	Fd	BX		7081 - D149	MD149	R40H5010	R40H5529	NR	NR
	Fd	BX		7081 - D149	MD149	R40H5010	R40H5529	NR	NR
	Fd	BX		7081 - D149	MD149	R40H5010	R40H5529	NR	NR
	Ra	GM	13 " x 3-1/2 "	2157T - 452	R46452	R40H378	R40H7055	R40H2588	R40H2589
	Ra	GM	13 " x 3-1/2 "	2157T - 452	R46452	R40H378	R40H7055	R40H2588	R40H2589
Single Rear Wheels 9,000, 14,500lb. GVW	Fd	BX		7081 - D149	MD149	R40H5010	R40H5529	NR	NR
	Fd	BX		7081 - D149	MD149	R40H5010	R40H5529	NR	NR
	Ra	GM	13 " x 3-1/2 "	2157T - 452	R46452	R40H378	R40H7055	R40H2588	R40H2589
	Ra	GM	13 " x 3-1/2 "	2157T - 452	R46452	R40H378	R40H7055	R40H2588	R40H2589
1995									
Motor Home Chassis	Ra	GM	13 " x 3-1/2 "	2157T - 452	R46452	R40H378	R40H7055	R40H2588	R40H2589
	Ra	GM	13 " x 3-1/2 "	2157T - 452	R46452	R40H378	R40H7055	R40H2588	R40H2589
Motor Home Chassis Except I-Beam	Fd	BX		7081 - D149	MD149	R40H5010	R40H5529	NR	NR
	Fd	BX		7081 - D149	MD149	R40H5010	R40H5529	NR	NR
Motor Home Chassis With I-Beam	Fd	BX		7081 - D149	MD149	R40H5010	R40H5529	NR	NR
	Fd	BX		7081 - D149	MD149	R40H5010	R40H5529	NR	NR
Motor Home Chassis With Rear Disc Brake	Fd	BX		7081 - D149	MD149	R40H5010	R40H5529	NR	NR
	Fd	BX		7081 - D149	MD149	R40H5010	R40H5529	NR	NR
	Rd	BX		7081 - D149	MD149	R40H5010	R40H5529	NR	NR
	Rd	BX		7081 - D149	MD149	R40H5010	R40H5529	NR	NR
8,200 lb. GVW	Fd	GM		7084 - D153	MD392	R40H5004DP	R40H5500	NR	NR
	Fd	GM		7084 - D153	MD392	R40H5004DP	R40H5500	NR	NR
	Ra	GM	13 " x 2-1/2 "	2042T - S655	R46451	R40H378	R40H7055	R40H2588	R40H2589
	Ra	GM	13 " x 2-1/2 "	2042T - S655	R46451	R40H378	R40H7055	R40H2588	R40H2589
9,000, 14,500lb. GVW	Fd	BX		7081 - D149	MD149	R40H5010	R40H5529	NR	NR
	Fd	BX		7081 - D149	MD149	R40H5010	R40H5529	NR	NR
	Rd	BX		7081 - D149	MD149	R40H5010	R40H5529	NR	NR
	Rd	BX		7081 - D149	MD149	R40H5010	R40H5529	NR	NR
Dual Rear Wheels 9,000, 14,500lb. GVW	Fd	BX		7081 - D149	MD149	R40H5010	R40H5529	NR	NR
	Fd	BX		7081 - D149	MD149	R40H5010	R40H5529	NR	NR
	Fd	BX		7081 - D149	MD149	R40H5010	R40H5529	NR	NR

32 - For rotor only use R44141480
67 - 183.5" Wheel Base
280 - 10 1/2" Ring Gear
282 - 10 1/2" Ring Gear, First Design; Use 3 3/8" Outside Diameter Axle Tubes
346 - 4500 lb. Casting Number 2238451452, 10mm Inlet
381 - Rotor and Hub One Piece Assembly W/O ABS Ring
405 - Rotor Only

MERITOR DRUM OR ROTOR NO.	CALIPER OR CYLINDER BORE SIZE	MERITOR CALIPER OR WHEEL CYLINDER (LEFT)	MERITOR CALIPER OR WHEEL CYLINDER (RIGHT)	MERITOR CALIPER OR WHEEL CYLINDER REPAIR KIT	MERITOR CALIPER PISTON	MERITOR MASTER CYLINDER	MERITOR MASTER CYLINDER KIT	MERITOR BRAKE HOSE (LEFT)	MERITOR BRAKE HOSE (RIGHT)
									GMC / CHEV(Cont.)
									P-30, P-3500 SERIES-1 TON FORWARD CONTROL AND MOTOR HOME CHASSIS(Cont.)
R44141862[394]	3-3/8 "	R42R55200	R42R55199[346]	R4066780	R4090021	R4110376	-	-	-
R44141859[381]	3-3/8 "	R42R55200	R42R55199[346]	R4066780	R4090021	R4110376	-	-	-
R4411316[67]		R42R55805	R42R55805	N/A	N/A	R4513542	-	-	-
R44145028[405]		R42R55805	R42R55805	N/A	N/A	-	-	-	-
R44140388[280]	1-3/16 "	R4133708	R4133708	R4166872	NR	-	-	-	-
R44140388[280]	1-3/16 "	R4133708	R4133708	R4166872	NR	-	-	-	-
R44141130[32]	3-3/8 "	R42R55200	R42R55199[346]	R4066780	R4090021	-	-	-	-
R44141130[32]	3-3/8 "	R42R55200	R42R55199[346]	R4066780	R4090021	-	-	-	-
R44141508[32]	3-3/8 "	R42R55200	R42R55199[346]	R4066780	R4090021	-	-	-	-
R44141508[32]	3-3/8 "	R42R55200	R42R55199[346]	R4066780	R4090021	-	-	-	-
R44141480[405]	3-3/8 "	R42R55200	R42R55199[346]	R4066780	R4090021	-	-	-	-
R44141480[405]	3-3/8 "	R42R55200	R42R55199[346]	R4066780	R4090021	-	-	-	-
R44141483[405]	3-3/8 "	R42R55200	R42R55199	R4066780	R4090021	-	-	-	-
R44141483[405]	3-3/8 "	R42R55200	R42R55199	R4066780	R4090021	-	-	-	-
R44141186[381]	3-5/32 "	R42R55382	R42R55381	R4066557	R4090068S	-	-	-	-
R44141186[381]	3-5/32 "	R42R55382	R42R55381	R4066557	R4090068S	-	-	-	-
R44140363[282]	1-1/16 "	R4133709	R4133709	N/A	NR	-	-	-	-
R44140363[282]	1-1/16 "	R4133709	R4133709	N/A	NR	-	-	-	-
R44141480[405]	3-3/8 "	R42R55200	R42R55199[346]	R4066780	R4090021	-	-	-	-
R44141480[405]	3-3/8 "	R42R55200	R42R55199[346]	R4066780	R4090021	-	-	-	-
R44141483[405]	3-3/8 "	R42R55200	R42R55199	R4066780	R4090021	-	-	-	-
R44141483[405]	3-3/8 "	R42R55200	R42R55199	R4066780	R4090021	-	-	-	-
R44141130[32]	3-3/8 "	R42R55200	R42R55199[346]	R4066780	R4090021	-	-	-	-
R44141130[32]	3-3/8 "	R42R55200	R42R55199[346]	R4066780	R4090021	-	-	-	-
R44141508[32]	3-3/8 "	R42R55200	R42R55199[346]	R4066780	R4090021	-	-	-	-
R44140388[280]	1-3/16 "	R4133708	R4133708	R4166872	NR	-	-	-	-
R44140388[280]	1-3/16 "	R4133708	R4133708	R4166872	NR	-	-	-	-
R44141152[381]	3-3/8 "	R42R55200	R42R55199[346]	R4066780	R4090021	-	-	-	-
R44141152[381]	3-3/8 "	R42R55200	R42R55199[346]	R4066780	R4090021	-	-	-	-
R44140387	1-1/16 "	R4133709	R4133709	N/A	NR	-	-	-	-
R44140387	1-1/16 "	R4133709	R4133709	N/A	NR	-	-	-	-
R44140388[280]	1-3/16 "	R4133708	R4133708	R4166872	NR	-	-	-	-
R44140388[280]	1-3/16 "	R4133708	R4133708	R4166872	NR	-	-	-	-
R44141130[32]	3-3/8 "	R42R55200	R42R55199[346]	R4066780	R4090021	-	-	-	-
R44141130[32]	3-3/8 "	R42R55200	R42R55199[346]	R4066780	R4090021	-	-	-	-
R44141508[32]	3-3/8 "	R42R55200	R42R55199[346]	R4066780	R4090021	-	-	-	-
R44141508[32]	3-3/8 "	R42R55200	R42R55199[346]	R4066780	R4090021	-	-	-	-
R44141480[405]	3-3/8 "	R42R55200	R42R55199[346]	R4066780	R4090021	-	-	-	-
R44141480[405]	3-3/8 "	R42R55200	R42R55199[346]	R4066780	R4090021	-	-	-	-
R44141483[405]	3-3/8 "	R42R55200	R42R55199	R4066780	R4090021	-	-	-	-
R44141483[405]	3-3/8 "	R42R55200	R42R55199	R4066780	R4090021	-	-	-	-
R44141186[381]	3-5/32 "	R42R55382	R42R55381	R4066557	R4090068S	-	-	-	-
R44141186[381]	3-5/32 "	R42R55382	R42R55381	R4066557	R4090068S	-	-	-	-
R44140363[282]	1-1/16 "	R4133709	R4133709	N/A	NR	-	-	-	-
R44140363[282]	1-1/16 "	R4133709	R4133709	N/A	NR	-	-	-	-
R44141480[405]	3-3/8 "	R42R55200	R42R55199[346]	R4066780	R4090021	-	-	-	-
R44141480[405]	3-3/8 "	R42R55200	R42R55199[346]	R4066780	R4090021	-	-	-	-
R44141483[405]	3-3/8 "	R42R55200	R42R55199	R4066780	R4090021	-	-	-	-
R44141483[405]	3-3/8 "	R42R55200	R42R55199	R4066780	R4090021	-	-	-	-
R44141508[32]	3-3/8 "	R42R55200	R42R55199[346]	R4066780	R4090021	-	-	-	-
R44141130[32]	3-3/8 "	R42R55200	R42R55199[346]	R4066780	R4090021	-	-	-	-
R44141130[32]	3-3/8 "	R42R55200	R42R55199[346]	R4066780	R4090021	-	-	-	-

MAKE MODEL YEAR AXLE CODE AXLE WEIGHT	AXLE & BRK. TYPE	BRK. MFG.	BRAKE SIZE	FMSI	MERITOR DISC PAD OR BRAKE SHOE	MERITOR GUIDE PIN OR RETURN SPRING KIT	MERITOR CALIPER HWD. KIT OR RETURN SPRING KIT	MERITOR ADJUSTER KIT (LEFT WHEEL)	MERITOR ADJUSTER KIT (RIGHT WHEEL)
GMC / CHEV(Cont.)									
P-30, P-3500 SERIES-1 TON FORWARD CONTROL AND MOTOR HOME CHASSIS(Cont.)									
1995									
	Ra	GM	13 " x 3-1/2 "	2157T - 452	R46452	R40H378	R40H7055	R40H2588	R40H2589
	Ra	GM	13 " x 3-1/2 "	2157T - 452	R46452	R40H378	R40H7055	R40H2588	R40H2589
Single Rear Wheels									
9,000, 14,500lb. GVW	Fd	BX		7081 - D149	MD149	R40H5010	R40H5529	NR	NR
	Fd	BX		7081 - D149	MD149	R40H5010	R40H5529	NR	NR
	Ra	GM	13 " x 3-1/2 "	2157T - 452	R46452	R40H378	R40H7055	R40H2588	R40H2589
	Ra	GM	13 " x 3-1/2 "	2157T - 452	R46452	R40H378	R40H7055	R40H2588	R40H2589
1994									
Motor Home Chassis	Ra	GM	13 " x 3-1/2 "	2157T - 452	R46452	R40H378	R40H7055	R40H2588	R40H2589
	Ra	GM	13 " x 3-1/2 "	2157T - 452	R46452	R40H378	R40H7055	R40H2588	R40H2589
Motor Home Chassis Except									
I-Beam	Fd	BX		7081 - D149	MD149	R40H5010	R40H5529	NR	NR
	Fd	BX		7081 - D149	MD149	R40H5010	R40H5529	NR	NR
Motor Home Chassis With									
I-Beam	Fd	BX		7081 - D149	MD149	R40H5010	R40H5529	NR	NR
	Fd	BX		7081 - D149	MD149	R40H5010	R40H5529	NR	NR
Motor Home Chassis With									
Rear Disc Brake	Fd	BX		7081 - D149	MD149	R40H5010	R40H5529	NR	NR
	Fd	BX		7081 - D149	MD149	R40H5010	R40H5529	NR	NR
	Rd	BX		7081 - D149	MD149	R40H5010	R40H5529	NR	NR
	Rd	BX		7081 - D149	MD149	R40H5010	R40H5529	NR	NR
8,200 lb. GVW	Fd	GM		7084 - D153	MD392	R40H5004DP	R40H5500	NR	NR
	Fd	GM		7084 - D153	MD392	R40H5004DP	R40H5500	NR	NR
	Ra	GM	13 " x 2-1/2 "	2042T - S655	R46451	R40H378	R40H7055	R40H2588	R40H2589
	Ra	GM	13 " x 2-1/2 "	2042T - S655	R46451	R40H378	R40H7055	R40H2588	R40H2589
9,000, 14,500lb. GVW	Fd	BX		7081 - D149	MD149	R40H5010	R40H5529	NR	NR
	Fd	BX		7081 - D149	MD149	R40H5010	R40H5529	NR	NR
	Rd	BX		7081 - D149	MD149	R40H5010	R40H5529	NR	NR
	Rd	BX		7081 - D149	MD149	R40H5010	R40H5529	NR	NR
Dual Rear Wheels									
9,000, 14,500lb. GVW	Fd	BX		7081 - D149	MD149	R40H5010	R40H5529	NR	NR
	Fd	BX		7081 - D149	MD149	R40H5010	R40H5529	NR	NR
	Fd	BX		7081 - D149	MD149	R40H5010	R40H5529	NR	NR
	Ra	GM	13 " x 3-1/2 "	2157T - 452	R46452	R40H378	R40H7055	R40H2588	R40H2589
	Ra	GM	13 " x 3-1/2 "	2157T - 452	R46452	R40H378	R40H7055	R40H2588	R40H2589
Single Rear Wheels									
9,000, 14,500lb. GVW	Fd	BX		7081 - D149	MD149	R40H5010	R40H5529	NR	NR
	Fd	BX		7081 - D149	MD149	R40H5010	R40H5529	NR	NR
	Ra	GM	13 " x 3-1/2 "	2157T - 452	R46452	R40H378	R40H7055	R40H2588	R40H2589
	Ra	GM	13 " x 3-1/2 "	2157T - 452	R46452	R40H378	R40H7055	R40H2588	R40H2589
1993									
Motor Home Chassis	Ra	GM	13 " x 3-1/2 "	2157T - 452	R46452	R40H378	R40H7055	R40H2588	R40H2589
	Ra	GM	13 " x 3-1/2 "	2157T - 452	R46452	R40H378	R40H7055	R40H2588	R40H2589
Motor Home Chassis Except									
I-Beam	Fd	BX		7081 - D149	MD149	R40H5010	R40H5529	NR	NR
	Fd	BX		7081 - D149	MD149	R40H5010	R40H5529	NR	NR
Motor Home Chassis With									
I-Beam	Fd	BX		7081 - D149	MD149	R40H5010	R40H5529	NR	NR
	Fd	BX		7081 - D149	MD149	R40H5010	R40H5529	NR	NR
Motor Home Chassis With									
Rear Disc Brake	Fd	BX		7081 - D149	MD149	R40H5010	R40H5529	NR	NR
	Fd	BX		7081 - D149	MD149	R40H5010	R40H5529	NR	NR
	Rd	BX		7081 - D149	MD149	R40H5010	R40H5529	NR	NR
	Rd	BX		7081 - D149	MD149	R40H5010	R40H5529	NR	NR
8,200 lb. GVW	Fd	GM		7084 - D153	MD392	R40H5004DP	R40H5500	NR	NR
	Fd	GM		7084 - D153	MD392	R40H5004DP	R40H5500	NR	NR
	Ra	GM	13 " x 2-1/2 "	2042T - S655	R46451	R40H378	R40H7055	R40H2588	R40H2589
	Ra	GM	13 " x 2-1/2 "	2042T - S655	R46451	R40H378	R40H7055	R40H2588	R40H2589
9,000, 14,500lb. GVW	Fd	BX		7081 - D149	MD149	R40H5010	R40H5529	NR	NR
	Fd	BX		7081 - D149	MD149	R40H5010	R40H5529	NR	NR
	Rd	BX		7081 - D149	MD149	R40H5010	R40H5529	NR	NR
	Rd	BX		7081 - D149	MD149	R40H5010	R40H5529	NR	NR
Dual Rear Wheels									
9,000, 14,500lb. GVW	Fd	BX		7081 - D149	MD149	R40H5010	R40H5529	NR	NR

32 - For rotor only use R44141480

280 - 10 1/2" Ring Gear

282 - 10 1/2" Ring Gear, First Design; Use 3 3/8" Outside Diameter Axle Tubes

346 - 4500 lb. Casting Number 2238451452, 10mm Inlet

381 - Rotor and Hub One Piece Assembly W/O ABS Ring

405 - Rotor Only

MERITOR DRUM OR ROTOR NO.	CALIPER OR CYLINDER BORE SIZE	MERITOR CALIPER OR WHEEL CYLINDER (LEFT)	MERITOR CALIPER OR WHEEL CYLINDER (RIGHT)	MERITOR CALIPER OR WHEEL CYLINDER REPAIR KIT	MERITOR CALIPER PISTON	MERITOR MASTER CYLINDER	MERITOR MASTER CYLINDER KIT	MERITOR BRAKE HOSE (LEFT)	MERITOR BRAKE HOSE (RIGHT)
GMC / CHEV(Cont.)									
P-30, P-3500 SERIES-1 TON FORWARD CONTROL AND MOTOR HOME CHASSIS(Cont.)									
R44140388[280]	1-3/16 "	R4133708	R4133708	R4166872	NR	-	-	-	-
R44140388[280]	1-3/16 "	R4133708	R4133708	R4166872	NR	-	-	-	-
R44141152[381]	3-3/8 "	R42R55200	R42R55199[346]	R4066780	R4090021	-	-	-	-
R44141152[381]	3-3/8 "	R42R55200	R42R55199[346]	R4066780	R4090021	-	-	-	-
R44140387	1-1/16 "	R4133709	R4133709	N/A	NR	-	-	-	-
R44140387	1-1/16 "	R4133709	R4133709	N/A	NR	-	-	-	-
R44140388[280]	1-3/16 "	R4133708	R4133708	R4166872	NR	-	-	-	-
R44140388[280]	1-3/16 "	R4133708	R4133708	R4166872	NR	-	-	-	-
R44141130[32]	3-3/8 "	R42R55200	R42R55199[346]	R4066780	R4090021	-	-	-	-
R44141130[32]	3-3/8 "	R42R55200	R42R55199[346]	R4066780	R4090021	-	-	-	-
R44141508[32]	3-3/8 "	R42R55200	R42R55199[346]	R4066780	R4090021	-	-	-	-
R44141508[32]	3-3/8 "	R42R55200	R42R55199[346]	R4066780	R4090021	-	-	-	-
R44141480[405]	3-3/8 "	R42R55200	R42R55199[346]	R4066780	R4090021	-	-	-	-
R44141480[405]	3-3/8 "	R42R55200	R42R55199[346]	R4066780	R4090021	-	-	-	-
R44141483[405]	3-3/8 "	R42R55200	R42R55199	R4066780	R4090021	-	-	-	-
R44141483[405]	3-3/8 "	R42R55200	R42R55199	R4066780	R4090021	-	-	-	-
R44141186[381]	3-5/32 "	R42R55382	R42R55381	R4066557	R4090068S	-	-	-	-
R44141186[381]	3-5/32 "	R42R55382	R42R55381	R4066557	R4090068S	-	-	-	-
R44140363[282]	1-1/16 "	R4133709	R4133709	N/A	NR	-	-	-	-
R44140363[282]	1-1/16 "	R4133709	R4133709	N/A	NR	-	-	-	-
R44141480[405]	3-3/8 "	R42R55200	R42R55199[346]	R4066780	R4090021	-	-	-	-
R44141480[405]	3-3/8 "	R42R55200	R42R55199[346]	R4066780	R4090021	-	-	-	-
R44141483[405]	3-3/8 "	R42R55200	R42R55199	R4066780	R4090021	-	-	-	-
R44141483[405]	3-3/8 "	R42R55200	R42R55199	R4066780	R4090021	-	-	-	-
R44141130[32]	3-3/8 "	R42R55200	R42R55199[346]	R4066780	R4090021	-	-	-	-
R44141130[32]	3-3/8 "	R42R55200	R42R55199[346]	R4066780	R4090021	-	-	-	-
R44141508[32]	3-3/8 "	R42R55200	R42R55199[346]	R4066780	R4090021	-	-	-	-
R44140388[280]	1-3/16 "	R4133708	R4133708	R4166872	NR	-	-	-	-
R44140388[280]	1-3/16 "	R4133708	R4133708	R4166872	NR	-	-	-	-
R44141152[381]	3-3/8 "	R42R55200	R42R55199[346]	R4066780	R4090021	-	-	-	-
R44141152[381]	3-3/8 "	R42R55200	R42R55199[346]	R4066780	R4090021	-	-	-	-
R44140387	1-1/16 "	R4133709	R4133709	N/A	NR	-	-	-	-
R44140387	1-1/16 "	R4133709	R4133709	N/A	NR	-	-	-	-
R44140388[280]	1-3/16 "	R4133708	R4133708	R4166872	NR	-	-	-	-
R44140388[280]	1-3/16 "	R4133708	R4133708	R4166872	NR	-	-	-	-
R44141130[32]	3-3/8 "	R42R55200	R42R55199[346]	R4066780	R4090021	-	-	-	-
R44141130[32]	3-3/8 "	R42R55200	R42R55199[346]	R4066780	R4090021	-	-	-	-
R44141508[32]	3-3/8 "	R42R55200	R42R55199[346]	R4066780	R4090021	-	-	-	-
R44141508[32]	3-3/8 "	R42R55200	R42R55199[346]	R4066780	R4090021	-	-	-	-
R44141480[405]	3-3/8 "	R42R55200	R42R55199[346]	R4066780	R4090021	-	-	-	-
R44141480[405]	3-3/8 "	R42R55200	R42R55199[346]	R4066780	R4090021	-	-	-	-
R44141483[405]	3-3/8 "	R42R55200	R42R55199	R4066780	R4090021	-	-	-	-
R44141483[405]	3-3/8 "	R42R55200	R42R55199	R4066780	R4090021	-	-	-	-
R44141186[381]	3-5/32 "	R42R55382	R42R55381	R4066557	R4090068S	-	-	-	-
R44141186[381]	3-5/32 "	R42R55382	R42R55381	R4066557	R4090068S	-	-	-	-
R44140363[282]	1-1/16 "	R4133709	R4133709	N/A	NR	-	-	-	-
R44140363[282]	1-1/16 "	R4133709	R4133709	N/A	NR	-	-	-	-
R44141480[405]	3-3/8 "	R42R55200	R42R55199[346]	R4066780	R4090021	-	-	-	-
R44141480[405]	3-3/8 "	R42R55200	R42R55199[346]	R4066780	R4090021	-	-	-	-
R44141483[405]	3-3/8 "	R42R55200	R42R55199	R4066780	R4090021	-	-	-	-
R44141483[405]	3-3/8 "	R42R55200	R42R55199	R4066780	R4090021	-	-	-	-
R44141130[32]	3-3/8 "	R42R55200	R42R55199[346]	R4066780	R4090021	-	-	-	-

MAKE MODEL YEAR AXLE CODE AXLE WEIGHT	AXLE & BRK. TYPE	BRK. MFG.	BRAKE SIZE	FMSI	MERITOR DISC PAD OR BRAKE SHOE	MERITOR GUIDE PIN OR RETURN SPRING KIT	MERITOR CALIPER HWD. KIT OR RETURN SPRING KIT	MERITOR ADJUSTER KIT (LEFT WHEEL)	MERITOR ADJUSTER KIT (RIGHT WHEEL)
GMC / CHEV(Cont.)									
P-30, P-3500 SERIES-1 TON FORWARD CONTROL AND MOTOR HOME CHASSIS(Cont.)									
1993									
	Fd	BX		7081 - D149	MD149	R40H5010	R40H5529	NR	NR
	Fd	BX		7081 - D149	MD149	R40H5010	R40H5529	NR	NR
	Ra	GM	13 " x 3-1/2 "	2157T - 452	R46452	R40H378	R40H7055	R40H2588	R40H2589
	Ra	GM	13 " x 3-1/2 "	2157T - 452	R46452	R40H378	R40H7055	R40H2588	R40H2589
Single Rear Wheels									
9,000, 14,500lb. GVW	Fd	BX		7081 - D149	MD149	R40H5010	R40H5529	NR	NR
	Fd	BX		7081 - D149	MD149	R40H5010	R40H5529	NR	NR
	Ra	GM	13 " x 3-1/2 "	2157T - 452	R46452	R40H378	R40H7055	R40H2588	R40H2589
	Ra	GM	13 " x 3-1/2 "	2157T - 452	R46452	R40H378	R40H7055	R40H2588	R40H2589
1992									
Motor Home Chassis	Ra	GM	13 " x 3-1/2 "	2157T - 452	R46452	R40H378	R40H7055	R40H2588	R40H2589
	Ra	GM	13 " x 3-1/2 "	2157T - 452	R46452	R40H378	R40H7055	R40H2588	R40H2589
Motor Home Chassis Except									
I-Beam	Fd	BX		7081 - D149	MD149	R40H5010	R40H5529	NR	NR
	Fd	BX		7081 - D149	MD149	R40H5010	R40H5529	NR	NR
Motor Home Chassis With									
I-Beam	Fd	BX		7081 - D149	MD149	R40H5010	R40H5529	NR	NR
	Fd	BX		7081 - D149	MD149	R40H5010	R40H5529	NR	NR
Motor Home Chassis With									
Rear Disc Brake	Fd	BX		7081 - D149	MD149	R40H5010	R40H5529	NR	NR
	Fd	BX		7081 - D149	MD149	R40H5010	R40H5529	NR	NR
	Rd	BX		7081 - D149	MD149	R40H5010	R40H5529	NR	NR
	Rd	BX		7081 - D149	MD149	R40H5010	R40H5529	NR	NR
8,200 lb. GVW	Fd	GM		7084 - D153	MD392	R40H5004DP	R40H5500	NR	NR
	Fd	GM		7084 - D153	MD392	R40H5004DP	R40H5500	NR	NR
	Ra	GM	13 " x 2-1/2 "	2042T - S655	R46451	R40H378	R40H7055	R40H2588	R40H2589
	Ra	GM	13 " x 2-1/2 "	2042T - S655	R46451	R40H378	R40H7055	R40H2588	R40H2589
9,000, 14,500lb. GVW	Fd	BX		7081 - D149	MD149	R40H5010	R40H5529	NR	NR
	Fd	BX		7081 - D149	MD149	R40H5010	R40H5529	NR	NR
	Rd	BX		7081 - D149	MD149	R40H5010	R40H5529	NR	NR
	Rd	BX		7081 - D149	MD149	R40H5010	R40H5529	NR	NR
Dual Rear Wheels									
9,000, 14,500lb. GVW	Fd	BX		7081 - D149	MD149	R40H5010	R40H5529	NR	NR
	Fd	BX		7081 - D149	MD149	R40H5010	R40H5529	NR	NR
	Fd	BX		7081 - D149	MD149	R40H5010	R40H5529	NR	NR
	Ra	GM	13 " x 3-1/2 "	2157T - 452	R46452	R40H378	R40H7055	R40H2588	R40H2589
	Ra	GM	13 " x 3-1/2 "	2157T - 452	R46452	R40H378	R40H7055	R40H2588	R40H2589
Single Rear Wheels									
9,000, 14,500lb. GVW	Fd	BX		7081 - D149	MD149	R40H5010	R40H5529	NR	NR
	Fd	BX		7081 - D149	MD149	R40H5010	R40H5529	NR	NR
	Ra	GM	13 " x 3-1/2 "	2157T - 452	R46452	R40H378	R40H7055	R40H2588	R40H2589
	Ra	GM	13 " x 3-1/2 "	2157T - 452	R46452	R40H378	R40H7055	R40H2588	R40H2589
1991									
Dual Rear Wheels	Ra	GM	13 " x 3-1/2 "	2157T - 452	R46452	R40H378	R40H7055	R40H2588	R40H2589
Dual Rear Wheels Except									
I-Beam	Fd	BX		7081 - D149	MD149	R40H5010	R40H5529	NR	NR
	Fd	BX		7081 - D149	MD149	R40H5010	R40H5529	NR	NR
Dual Rear Wheels with									
I-Beam	Fd	BX		7081 - D149	MD149	R40H5010	R40H5529	NR	NR
	Fd	BX		7081 - D149	MD149	R40H5010	R40H5529	NR	NR
Motor Home Chassis	Ra	GM	13 " x 3-1/2 "	2157T - 452	R46452	R40H378	R40H7055	R40H2588	R40H2589
	Ra	GM	13 " x 3-1/2 "	2157T - 452	R46452	R40H378	R40H7055	R40H2588	R40H2589
Motor Home Chassis Except									
I-Beam	Fd	BX		7081 - D149	MD149	R40H5010	R40H5529	NR	NR
	Fd	BX		7081 - D149	MD149	R40H5010	R40H5529	NR	NR
Motor Home Chassis With									
I-Beam	Fd	BX		7081 - D149	MD149	R40H5010	R40H5529	NR	NR
	Fd	BX		7081 - D149	MD149	R40H5010	R40H5529	NR	NR
Motor Home Chassis With									
Rear Disc Brake	Fd	BX		7081 - D149	MD149	R40H5010	R40H5529	NR	NR
	Fd	BX		7081 - D149	MD149	R40H5010	R40H5529	NR	NR
	Rd	BX		7081 - D149	MD149	R40H5010	R40H5529	NR	NR
	Rd	BX		7081 - D149	MD149	R40H5010	R40H5529	NR	NR

32 - For rotor only use R44141480

280 - 10 1/2" Ring Gear

282 - 10 1/2" Ring Gear, First Design; Use 3 3/8" Outside Diameter Axle Tubes

346 - 4500 lb. Casting Number 2238451452, 10mm Inlet

381 - Rotor and Hub One Piece Assembly W/O ABS Ring

405 - Rotor Only

MERITOR DRUM OR ROTOR NO.	CALIPER OR CYLINDER BORE SIZE	MERITOR CALIPER OR WHEEL CYLINDER (LEFT)	MERITOR CALIPER OR WHEEL CYLINDER (RIGHT)	MERITOR CALIPER OR WHEEL CYLINDER REPAIR KIT	MERITOR CALIPER PISTON	MERITOR MASTER CYLINDER	MERITOR MASTER CYLINDER KIT	MERITOR BRAKE HOSE (LEFT)	MERITOR BRAKE HOSE (RIGHT)
GMC / CHEV(Cont.)									
P-30, P-3500 SERIES-1 TON FORWARD CONTROL AND MOTOR HOME CHASSIS(Cont.)									
R44141130[32]	3-3/8 "	R42R55200	R42R55199[346]	R4066780	R4090021	-	-	-	-
R44141508[32]	3-3/8 "	R42R55200	R42R55199[346]	R4066780	R4090021	-	-	-	-
R44140388[280]	1-3/16 "	R4133708	R4133708	R4166872	NR	-	-	-	-
R44140388[280]	1-3/16 "	R4133708	R4133708	R4166872	NR	-	-	-	-
R44141152[381]	3-3/8 "	R42R55200	R42R55199[346]	R4066780	R4090021	-	-	-	-
R44141152[381]	3-3/8 "	R42R55200	R42R55199[346]	R4066780	R4090021	-	-	-	-
R44140387	1-1/16 "	R4133709	R4133709	N/A	NR	-	-	-	-
R44140387	1-1/16 "	R4133709	R4133709	N/A	NR	-	-	-	-
R44140388[280]	1-3/16 "	R4133708	R4133708	R4166872	NR	-	-	-	-
R44140388[280]	1-3/16 "	R4133708	R4133708	R4166872	NR	-	-	-	-
R44141130[32]	3-3/8 "	R42R55200	R42R55199[346]	R4066780	R4090021	-	-	-	-
R44141130[32]	3-3/8 "	R42R55200	R42R55199[346]	R4066780	R4090021	-	-	-	-
R44141508[32]	3-3/8 "	R42R55200	R42R55199[346]	R4066780	R4090021	-	-	-	-
R44141508[32]	3-3/8 "	R42R55200	R42R55199[346]	R4066780	R4090021	-	-	-	-
R44141480[405]	3-3/8 "	R42R55200	R42R55199[346]	R4066780	R4090021	-	-	-	-
R44141480[405]	3-3/8 "	R42R55200	R42R55199[346]	R4066780	R4090021	-	-	-	-
R44141483[405]	3-3/8 "	R42R55200	R42R55199	R4066780	R4090021	-	-	-	-
R44141483[405]	3-3/8 "	R42R55200	R42R55199	R4066780	R4090021	-	-	-	-
R44141186[381]	3-5/32 "	R42R55382	R42R55381	R4066557	R4090068S	-	-	-	-
R44141186[381]	3-5/32 "	R42R55382	R42R55381	R4066557	R4090068S	-	-	-	-
R44140363[282]	1-1/16 "	R4133709	R4133709	N/A	NR	-	-	-	-
R44140363[282]	1-1/16 "	R4133709	R4133709	N/A	NR	-	-	-	-
R44141480[405]	3-3/8 "	R42R55200	R42R55199[346]	R4066780	R4090021	-	-	-	-
R44141480[405]	3-3/8 "	R42R55200	R42R55199[346]	R4066780	R4090021	-	-	-	-
R44141483[405]	3-3/8 "	R42R55200	R42R55199	R4066780	R4090021	-	-	-	-
R44141483[405]	3-3/8 "	R42R55200	R42R55199	R4066780	R4090021	-	-	-	-
R44141130[32]	3-3/8 "	R42R55200	R42R55199[346]	R4066780	R4090021	-	-	-	-
R44141130[32]	3-3/8 "	R42R55200	R42R55199[346]	R4066780	R4090021	-	-	-	-
R44141508[32]	3-3/8 "	R42R55200	R42R55199[346]	R4066780	R4090021	-	-	-	-
R44140388[280]	1-3/16 "	R4133708	R4133708	R4166872	NR	-	-	-	-
R44140388[280]	1-3/16 "	R4133708	R4133708	R4166872	NR	-	-	-	-
R44141152[381]	3-3/8 "	R42R55200	R42R55199[346]	R4066780	R4090021	-	-	-	-
R44141152[381]	3-3/8 "	R42R55200	R42R55199[346]	R4066780	R4090021	-	-	-	-
R44140387	1-1/16 "	R4133709	R4133709	N/A	NR	-	-	-	-
R44140387	1-1/16 "	R4133709	R4133709	N/A	NR	-	-	-	-
R44140388[280]	1-3/16 "	R4133708	R4133708	R4166872	NR	-	-	-	-
R44141130[32]	3-3/8 "	R42R55200	R42R55199[346]	R4066780	R4090021	-	-	-	-
R44141130[32]	3-3/8 "	R42R55200	R42R55199[346]	R4066780	R4090021	-	-	-	-
R44141508[32]	3-3/8 "	R42R55200	R42R55199[346]	R4066780	R4090021	-	-	-	-
R44141508[32]	3-3/8 "	R42R55200	R42R55199[346]	R4066780	R4090021	-	-	-	-
R44140388[280]	1-3/16 "	R4133708	R4133708	R4166872	NR	-	-	-	-
R44140388[280]	1-3/16 "	R4133708	R4133708	R4166872	NR	-	-	-	-
R44141130[32]	3-3/8 "	R42R55200	R42R55199[346]	R4066780	R4090021	-	-	-	-
R44141130[32]	3-3/8 "	R42R55200	R42R55199[346]	R4066780	R4090021	-	-	-	-
R44141508[32]	3-3/8 "	R42R55200	R42R55199[346]	R4066780	R4090021	-	-	-	-
R44141508[32]	3-3/8 "	R42R55200	R42R55199[346]	R4066780	R4090021	-	-	-	-
R44141480[405]	3-3/8 "	R42R55200	R42R55199[346]	R4066780	R4090021	-	-	-	-
R44141480[405]	3-3/8 "	R42R55200	R42R55199[346]	R4066780	R4090021	-	-	-	-
R44141483[405]	3-3/8 "	R42R55200	R42R55199	R4066780	R4090021	-	-	-	-
R44141483[405]	3-3/8 "	R42R55200	R42R55199	R4066780	R4090021	-	-	-	-

MAKE MODEL YEAR AXLE CODE AXLE WEIGHT	AXLE & BRK. TYPE	BRK. MFG.	BRAKE SIZE	FMSI	MERITOR DISC PAD OR BRAKE SHOE	MERITOR GUIDE PIN OR RETURN SPRING KIT	MERITOR CALIPER HWD. KIT OR RETURN SPRING KIT	MERITOR ADJUSTER KIT (LEFT WHEEL)	MERITOR ADJUSTER KIT (RIGHT WHEEL)
GMC / CHEV(Cont.)									
P-30, P-3500 SERIES-1 TON FORWARD CONTROL AND MOTOR HOME CHASSIS(Cont.)									
1991									
8,400 lb. GVW	Fd	GM		7280 - D392	MD392	R40H5004DP	R40H5500	NR	NR
	Fd	GM		7280 - D392	MD392	R40H5004DP	R40H5500	NR	NR
	Ra	GM	13 " x 2-1/2 "	2042AT - 451	R46451	R40H378	R40H7055	R40H2588	R40H2589
	Ra	GM	13 " x 2-1/2 "	2042AT - 451	R46451	R40H378	R40H7055	R40H2588	R40H2589
Dual Rear Wheels									
9,000, 12,500lb. GVW	Ra	GM	13 " x 3-1/2 "	2157T - 452	R46452	R40H378	R40H7055	R40H2588	R40H2589
Single Rear Wheels									
9,000, 12,500lb. GVW	Fd	BX		7081 - D149	MD149	R40H5010	R40H5529	NR	NR
	Fd	BX		7081 - D149	MD149	R40H5010	R40H5529	NR	NR
	Ra	GM	13 " x 3-1/2 "	2157T - 452	R46452	R40H378	R40H7055	R40H2588	R40H2589
14,500 lb. GVW	Fd	BX		7081 - D149	MD149	R40H5010	R40H5529	NR	NR
	Fd	BX		7081 - D149	MD149	R40H5010	R40H5529	NR	NR
	Rd	BX		7081 - D149	MD149	R40H5010	R40H5529	NR	NR
	Rd	BX		7081 - D149	MD149	R40H5010	R40H5529	NR	NR
1990									
Dual Rear Wheels	Ra	GM	13 " x 3-1/2 "	2157T - 452	R46452	R40H378	R40H7055	R40H2588	R40H2589
Dual Rear Wheels Except									
I-Beam	Fd	BX		7081 - D149	MD149	R40H5010	R40H5529	NR	NR
	Fd	BX		7081 - D149	MD149	R40H5010	R40H5529	NR	NR
Dual Rear Wheels with									
I-Beam	Fd	BX		7081 - D149	MD149	R40H5010	R40H5529	NR	NR
	Fd	BX		7081 - D149	MD149	R40H5010	R40H5529	NR	NR
Motor Home Chassis	Ra	GM	13 " x 3-1/2 "	2157T - 452	R46452	R40H378	R40H7055	R40H2588	R40H2589
	Ra	GM	13 " x 3-1/2 "	2157T - 452	R46452	R40H378	R40H7055	R40H2588	R40H2589
Motor Home Chassis Except									
I-Beam	Fd	BX		7081 - D149	MD149	R40H5010	R40H5529	NR	NR
	Fd	BX		7081 - D149	MD149	R40H5010	R40H5529	NR	NR
Motor Home Chassis With									
I-Beam	Fd	BX		7081 - D149	MD149	R40H5010	R40H5529	NR	NR
Motor Home Chassis With									
I-Beam and Rear Disc Brake	Fd	BX		7081 - D149	MD149	R40H5010	R40H5529	NR	NR
Motor Home Chassis With									
Rear Disc Brake	Fd	BX		7081 - D149	MD149	R40H5010	R40H5529	NR	NR
	Rd	BX		7081 - D149	MD149	R40H5010	R40H5529	NR	NR
	Rd	BX		7081 - D149	MD149	R40H5010	R40H5529	NR	NR
8,400 lb. GVW	Fd	GM		7280 - D392	MD392	R40H5004DP	R40H5500	NR	NR
	Fd	GM		7280 - D392	MD392	R40H5004DP	R40H5500	NR	NR
	Ra	GM	13 " x 2-1/2 "	2042AT - 451	R46451	R40H378	R40H7055	R40H2588	R40H2589
	Ra	GM	13 " x 2-1/2 "	2042AT - 451	R46451	R40H378	R40H7055	R40H2588	R40H2589
Dual Rear Wheels									
9,000, 12,500lb. GVW	Ra	GM	13 " x 3-1/2 "	2157T - 452	R46452	R40H378	R40H7055	R40H2588	R40H2589
Single Rear Wheels									
9,000, 12,500lb. GVW	Fd	BX		7081 - D149	MD149	R40H5010	R40H5529	NR	NR
	Fd	BX		7081 - D149	MD149	R40H5010	R40H5529	NR	NR
	Ra	GM	13 " x 3-1/2 "	2157T - 452	R46452	R40H378	R40H7055	R40H2588	R40H2589
	Ra	GM	13 " x 3-1/2 "	2157T - 452	R46452	R40H378	R40H7055	R40H2588	R40H2589
14,500 lb. GVW	Fd	BX		7081 - D149	MD149	R40H5010	R40H5529	NR	NR
	Fd	BX		7081 - D149	MD149	R40H5010	R40H5529	NR	NR
	Rd	BX		7081 - D149	MD149	R40H5010	R40H5529	NR	NR
	Rd	BX		7081 - D149	MD149	R40H5010	R40H5529	NR	NR
1989									
Dual Rear Wheels	Ra	GM	13 " x 3-1/2 "	2157T - 452	R46452	R40H378	R40H7055	R40H2588	R40H2589
Dual Rear Wheels Except									
I-Beam	Fd	BX		7081 - D149	MD149	R40H5010	R40H5529	NR	NR
	Fd	BX		7081 - D149	MD149	R40H5010	R40H5529	NR	NR
Dual Rear Wheels with									
I-Beam	Fd	BX		7081 - D149	MD149	R40H5010	R40H5529	NR	NR
	Fd	BX		7081 - D149	MD149	R40H5010	R40H5529	NR	NR
Motor Home Chassis	Ra	GM	13 " x 3-1/2 "	2157T - 452	R46452	R40H378	R40H7055	R40H2588	R40H2589
	Ra	GM	13 " x 3-1/2 "	2157T - 452	R46452	R40H378	R40H7055	R40H2588	R40H2589
Motor Home Chassis Except									
I-Beam	Fd	BX		7081 - D149	MD149	R40H5010	R40H5529	NR	NR
	Fd	BX		7081 - D149	MD149	R40H5010	R40H5529	NR	NR

32 - For rotor only use R44141480

280 - 10 1/2" Ring Gear

282 - 10 1/2" Ring Gear, First Design; Use 3 3/8" Outside Diameter Axle Tubes

346 - 4500 lb. Casting Number 2238451452, 10mm Inlet

381 - Rotor and Hub One Piece Assembly W/O ABS Ring

405 - Rotor Only

MERITOR DRUM OR ROTOR NO.	CALIPER OR CYLINDER BORE SIZE	MERITOR CALIPER OR WHEEL CYLINDER (LEFT)	MERITOR CALIPER OR WHEEL CYLINDER (RIGHT)	MERITOR CALIPER OR WHEEL CYLINDER REPAIR KIT	MERITOR CALIPER PISTON	MERITOR MASTER CYLINDER	MERITOR MASTER CYLINDER KIT	MERITOR BRAKE HOSE (LEFT)	MERITOR BRAKE HOSE (RIGHT)
GMC / CHEV(Cont.)									
P-30, P-3500 SERIES-1 TON FORWARD CONTROL AND MOTOR HOME CHASSIS(Cont.)									
R44141186[381]	3-5/32 "	R42R55382	R42R55381	R4066557	R4090068S	-	-	-	-
R44141186[381]	3-5/32 "	R42R55382	R42R55381	R4066557	R4090068S	-	-	-	-
R44140363[282]	1-1/16 "	R4133709	R4133709	N/A	NR	-	-	-	-
R44140363[282]	1-1/16 "	R4133709	R4133709	N/A	NR	-	-	-	-
R44140388[280]	1-3/16 "	R4133708	R4133708	R4166872	NR	-	-	-	-
R44141152[381]	3-3/8 "	R42R55200	R42R55199[346]	R4066780	R4090021	-	-	-	-
R44141152[381]	3-3/8 "	R42R55200	R42R55199[346]	R4066780	R4090021	-	-	-	-
R44140387	1-1/16 "	R4133709	R4133709	N/A	NR	-	-	-	-
R44141480[405]	3-3/8 "	R42R55200	R42R55199[346]	R4066780	R4090021	-	-	-	-
R44141480[405]	3-3/8 "	R42R55200	R42R55199[346]	R4066780	R4090021	-	-	-	-
R44141483[405]	3-3/8 "	R42R55200	R42R55199	R4066780	R4090021	-	-	-	-
R44141483[405]	3-3/8 "	R42R55200	R42R55199	R4066780	R4090021	-	-	-	-
R44140388[280]	1-3/16 "	R4133708	R4133708	R4166872	NR	-	-	-	-
R44141130[32]	3-3/8 "	R42R55200	R42R55199[346]	R4066780	R4090021	-	-	-	-
R44141130[32]	3-3/8 "	R42R55200	R42R55199[346]	R4066780	R4090021	-	-	-	-
R44141508[32]	3-3/8 "	R42R55200	R42R55199[346]	R4066780	R4090021	-	-	-	-
R44141508[32]	3-3/8 "	R42R55200	R42R55199[346]	R4066780	R4090021	-	-	-	-
R44140388[280]	1-3/16 "	R4133708	R4133708	R4166872	NR	-	-	-	-
R44140388[280]	1-3/16 "	R4133708	R4133708	R4166872	NR	-	-	-	-
R44141130[32]	3-3/8 "	R42R55200	R42R55199[346]	R4066780	R4090021	-	-	-	-
R44141130[32]	3-3/8 "	R42R55200	R42R55199[346]	R4066780	R4090021	-	-	-	-
R44141508[32]	3-3/8 "	R42R55200	R42R55199[346]	R4066780	R4090021	-	-	-	-
R44141480[405]	3-3/8 "	R42R55200	R42R55199[346]	R4066780	R4090021	-	-	-	-
R44141480[405]	3-3/8 "	R42R55200	R42R55199[346]	R4066780	R4090021	-	-	-	-
R44141483[405]	3-3/8 "	R42R55200	R42R55199	R4066780	R4090021	-	-	-	-
R44141483[405]	3-3/8 "	R42R55200	R42R55199	R4066780	R4090021	-	-	-	-
R44141186[381]	3-5/32 "	R42R55382	R42R55381	R4066557	R4090068S	-	-	-	-
R44141186[381]	3-5/32 "	R42R55382	R42R55381	R4066557	R4090068S	-	-	-	-
R44140363[282]	1-1/16 "	R4133709	R4133709	N/A	NR	-	-	-	-
R44140363[282]	1-1/16 "	R4133709	R4133709	N/A	NR	-	-	-	-
R44140388[280]	1-3/16 "	R4133708	R4133708	R4166872	NR	-	-	-	-
R44141152[381]	3-3/8 "	R42R55200	R42R55199[346]	R4066780	R4090021	-	-	-	-
R44141152[381]	3-3/8 "	R42R55200	R42R55199[346]	R4066780	R4090021	-	-	-	-
R44140387	1-1/16 "	R4133709	R4133709	N/A	NR	-	-	-	-
R44140387	1-1/16 "	R4133709	R4133709	N/A	NR	-	-	-	-
R44141480[405]	3-3/8 "	R42R55200	R42R55199[346]	R4066780	R4090021	-	-	-	-
R44141480[405]	3-3/8 "	R42R55200	R42R55199[346]	R4066780	R4090021	-	-	-	-
R44141483[405]	3-3/8 "	R42R55200	R42R55199	R4066780	R4090021	-	-	-	-
R44141483[405]	3-3/8 "	R42R55200	R42R55199	R4066780	R4090021	-	-	-	-
R44140388[280]	1-3/16 "	R4133708	R4133708	R4166872	NR	-	-	-	-
R44141130[32]	3-3/8 "	R42R55200	R42R55199[346]	R4066780	R4090021	-	-	-	-
R44141130[32]	3-3/8 "	R42R55200	R42R55199[346]	R4066780	R4090021	-	-	-	-
R44141508[32]	3-3/8 "	R42R55200	R42R55199[346]	R4066780	R4090021	-	-	-	-
R44141508[32]	3-3/8 "	R42R55200	R42R55199[346]	R4066780	R4090021	-	-	-	-
R44140388[280]	1-3/16 "	R4133708	R4133708	R4166872	NR	-	-	-	-
R44140388[280]	1-3/16 "	R4133708	R4133708	R4166872	NR	-	-	-	-
R44141130[32]	3-3/8 "	R42R55200	R42R55199[346]	R4066780	R4090021	-	-	-	-
R44141130[32]	3-3/8 "	R42R55200	R42R55199[346]	R4066780	R4090021	-	-	-	-

MAKE MODEL YEAR AXLE CODE AXLE WEIGHT	AXLE & BRK. TYPE	BRK. MFG.	BRAKE SIZE	FMSI	MERITOR DISC PAD OR BRAKE SHOE	MERITOR GUIDE PIN OR RETURN SPRING KIT	MERITOR CALIPER HWD. KIT OR RETURN SPRING KIT	MERITOR ADJUSTER KIT (LEFT WHEEL)	MERITOR ADJUSTER KIT (RIGHT WHEEL)
GMC / CHEV(Cont.)									
P-30, P-3500 SERIES-1 TON FORWARD CONTROL AND MOTOR HOME CHASSIS(Cont.)									
1989									
Motor Home Chassis With									
I-Beam	Fd	BX		7081 - D149	MD149	R40H5010	R40H5529	NR	NR
Motor Home Chassis With									
I-Beam and Rear Disc Brake	Fd	BX		7081 - D149	MD149	R40H5010	R40H5529	NR	NR
Motor Home Chassis With									
Rear Disc Brake	Fd	BX		7081 - D149	MD149	R40H5010	R40H5529	NR	NR
	Rd	BX		7081 - D149	MD149	R40H5010	R40H5529	NR	NR
	Rd	BX		7081 - D149	MD149	R40H5010	R40H5529	NR	NR
8,400 lb. GVW	Fd	GM		7280 - D392	MD392	R40H5004DP	R40H5500	NR	NR
	Fd	GM		7280 - D392	MD392	R40H5004DP	R40H5500	NR	NR
	Ra	GM	13 " x 2-1/2 "	2042AT - 451	R46451	R40H378	R40H7055	R40H2588	R40H2589
	Ra	GM	13 " x 2-1/2 "	2042AT - 451	R46451	R40H378	R40H7055	R40H2588	R40H2589
Dual Rear Wheels									
9,000, 12,500lb. GVW	Ra	GM	13 " x 3-1/2 "	2157T - 452	R46452	R40H378	R40H7055	R40H2588	R40H2589
Single Rear Wheels									
9,000, 12,500lb. GVW	Fd	BX		7081 - D149	MD149	R40H5010	R40H5529	NR	NR
	Fd	BX		7081 - D149	MD149	R40H5010	R40H5529	NR	NR
	Ra	GM	13 " x 3-1/2 "	2157T - 452	R46452	R40H378	R40H7055	R40H2588	R40H2589
	Ra	GM	13 " x 3-1/2 "	2157T - 452	R46452	R40H378	R40H7055	R40H2588	R40H2589
14,500 lb. GVW	Fd	BX		7081 - D149	MD149	R40H5010	R40H5529	NR	NR
	Fd	BX		7081 - D149	MD149	R40H5010	R40H5529	NR	NR
	Rd	BX		7081 - D149	MD149	R40H5010	R40H5529	NR	NR
	Rd	BX		7081 - D149	MD149	R40H5010	R40H5529	NR	NR
1988									
Dual Rear Wheels	Ra	GM	13 " x 3-1/2 "	2157T - 452	R46452	R40H378	R40H7055	R40H2588	R40H2589
Dual Rear Wheels Except									
I-Beam	Fd	BX		7081 - D149	MD149	R40H5010	R40H5529	NR	NR
	Fd	BX		7081 - D149	MD149	R40H5010	R40H5529	NR	NR
Dual Rear Wheels with									
I-Beam	Fd	BX		7081 - D149	MD149	R40H5010	R40H5529	NR	NR
	Fd	BX		7081 - D149	MD149	R40H5010	R40H5529	NR	NR
Motor Home Chassis	Ra	GM	13 " x 3-1/2 "	2157T - 452	R46452	R40H378	R40H7055	R40H2588	R40H2589
	Ra	GM	13 " x 3-1/2 "	2157T - 452	R46452	R40H378	R40H7055	R40H2588	R40H2589
Motor Home Chassis Except									
I-Beam	Fd	BX		7081 - D149	MD149	R40H5010	R40H5529	NR	NR
	Fd	BX		7081 - D149	MD149	R40H5010	R40H5529	NR	NR
Motor Home Chassis With									
I-Beam	Fd	BX		7081 - D149	MD149	R40H5010	R40H5529	NR	NR
Motor Home Chassis With									
I-Beam and Rear Disc Brake	Fd	BX		7081 - D149	MD149	R40H5010	R40H5529	NR	NR
Motor Home Chassis With									
Rear Disc Brake	Fd	BX		7081 - D149	MD149	R40H5010	R40H5529	NR	NR
	Rd	BX		7081 - D149	MD149	R40H5010	R40H5529	NR	NR
	Rd	BX		7081 - D149	MD149	R40H5010	R40H5529	NR	NR
8,400 lb. GVW	Fd	GM		7280 - D392	MD392	R40H5004DP	R40H5500	NR	NR
	Fd	GM		7280 - D392	MD392	R40H5004DP	R40H5500	NR	NR
	Ra	GM	13 " x 2-1/2 "	2042AT - 451	R46451	R40H378	R40H7055	R40H2588	R40H2589
	Ra	GM	13 " x 2-1/2 "	2042AT - 451	R46451	R40H378	R40H7055	R40H2588	R40H2589
Dual Rear Wheels									
9,000, 12,500lb. GVW	Ra	GM	13 " x 3-1/2 "	2157T - 452	R46452	R40H378	R40H7055	R40H2588	R40H2589
Single Rear Wheels									
9,000, 12,500lb. GVW	Fd	BX		7081 - D149	MD149	R40H5010	R40H5529	NR	NR
	Fd	BX		7081 - D149	MD149	R40H5010	R40H5529	NR	NR
	Ra	GM	13 " x 3-1/2 "	2157T - 452	R46452	R40H378	R40H7055	R40H2588	R40H2589
	Ra	GM	13 " x 3-1/2 "	2157T - 452	R46452	R40H378	R40H7055	R40H2588	R40H2589
14,500 lb. GVW	Fd	BX		7081 - D149	MD149	R40H5010	R40H5529	NR	NR
	Fd	BX		7081 - D149	MD149	R40H5010	R40H5529	NR	NR
	Rd	BX		7081 - D149	MD149	R40H5010	R40H5529	NR	NR
	Rd	BX		7081 - D149	MD149	R40H5010	R40H5529	NR	NR
1987									
Dual Rear Wheels	Ra	GM	13 " x 3-1/2 "	2157T - 452	R46452	R40H378	R40H7055	R40H2588	R40H2589
Dual Rear Wheels Except									
I-Beam	Fd	BX		7081 - D149	MD149	R40H5010	R40H5529	NR	NR

32 - For rotor only use R44141480

280 - 10 1/2" Ring Gear

282 - 10 1/2" Ring Gear, First Design; Use 3 3/8" Outside Diameter Axle Tubes

346 - 4500 lb. Casting Number 2238451452, 10mm Inlet

381 - Rotor and Hub One Piece Assembly W/O ABS Ring

405 - Rotor Only

MERITOR DRUM OR ROTOR NO.	CALIPER OR CYLINDER BORE SIZE	MERITOR CALIPER OR WHEEL CYLINDER (LEFT)	MERITOR CALIPER OR WHEEL CYLINDER (RIGHT)	MERITOR CALIPER OR WHEEL CYLINDER REPAIR KIT	MERITOR CALIPER PISTON	MERITOR MASTER CYLINDER	MERITOR MASTER CYLINDER KIT	MERITOR BRAKE HOSE (LEFT)	MERITOR BRAKE HOSE (RIGHT)
GMC / CHEV(Cont.)									
P-30, P-3500 SERIES-1 TON FORWARD CONTROL AND MOTOR HOME CHASSIS(Cont.)									
R44141508[32]	3-3/8 "	R42R55200	R42R55199[346]	R4066780	R4090021	-	-	-	-
R44141480[405]	3-3/8 "	R42R55200	R42R55199[346]	R4066780	R4090021	-	-	-	-
R44141480[405]	3-3/8 "	R42R55200	R42R55199[346]	R4066780	R4090021	-	-	-	-
R44141483[405]	3-3/8 "	R42R55200	R42R55199	R4066780	R4090021	-	-	-	-
R44141483[405]	3-3/8 "	R42R55200	R42R55199	R4066780	R4090021	-	-	-	-
R44141186[381]	3-5/32 "	R42R55382	R42R55381	R4066557	R4090068S	-	-	-	-
R44141186[381]	3-5/32 "	R42R55382	R42R55381	R4066557	R4090068S	-	-	-	-
R44140363[282]	1-1/16 "	R4133709	R4133709	N/A	NR	-	-	-	-
R44140363[282]	1-1/16 "	R4133709	R4133709	N/A	NR	-	-	-	-
R44140388[280]	1-3/16 "	R4133708	R4133708	R4166872	NR	-	-	-	-
R44141152[381]	3-3/8 "	R42R55200	R42R55199[346]	R4066780	R4090021	-	-	-	-
R44141152[381]	3-3/8 "	R42R55200	R42R55199[346]	R4066780	R4090021	-	-	-	-
R44140387	1-1/16 "	R4133709	R4133709	N/A	NR	-	-	-	-
R44140387	1-1/16 "	R4133709	R4133709	N/A	NR	-	-	-	-
R44141480[405]	3-3/8 "	R42R55200	R42R55199[346]	R4066780	R4090021	-	-	-	-
R44141480[405]	3-3/8 "	R42R55200	R42R55199[346]	R4066780	R4090021	-	-	-	-
R44141483[405]	3-3/8 "	R42R55200	R42R55199	R4066780	R4090021	-	-	-	-
R44141483[405]	3-3/8 "	R42R55200	R42R55199	R4066780	R4090021	-	-	-	-
R44140388[280]	1-3/16 "	R4133708	R4133708	R4166872	NR	-	-	-	-
R44141130[32]	3-3/8 "	R42R55200	R42R55199[346]	R4066780	R4090021	-	-	-	-
R44141130[32]	3-3/8 "	R42R55200	R42R55199[346]	R4066780	R4090021	-	-	-	-
R44141508[32]	3-3/8 "	R42R55200	R42R55199[346]	R4066780	R4090021	-	-	-	-
R44141508[32]	3-3/8 "	R42R55200	R42R55199[346]	R4066780	R4090021	-	-	-	-
R44140388[280]	1-3/16 "	R4133708	R4133708	R4166872	NR	-	-	-	-
R44140388[280]	1-3/16 "	R4133708	R4133708	R4166872	NR	-	-	-	-
R44141130[32]	3-3/8 "	R42R55200	R42R55199[346]	R4066780	R4090021	-	-	-	-
R44141130[32]	3-3/8 "	R42R55200	R42R55199[346]	R4066780	R4090021	-	-	-	-
R44141508[32]	3-3/8 "	R42R55200	R42R55199[346]	R4066780	R4090021	-	-	-	-
R44141480[405]	3-3/8 "	R42R55200	R42R55199[346]	R4066780	R4090021	-	-	-	-
R44141480[405]	3-3/8 "	R42R55200	R42R55199[346]	R4066780	R4090021	-	-	-	-
R44141483[405]	3-3/8 "	R42R55200	R42R55199	R4066780	R4090021	-	-	-	-
R44141483[405]	3-3/8 "	R42R55200	R42R55199	R4066780	R4090021	-	-	-	-
R44141186[381]	3-5/32 "	R42R55382	R42R55381	R4066557	R4090068S	-	-	-	-
R44141186[381]	3-5/32 "	R42R55382	R42R55381	R4066557	R4090068S	-	-	-	-
R44140363[282]	1-1/16 "	R4133709	R4133709	N/A	NR	-	-	-	-
R44140363[282]	1-1/16 "	R4133709	R4133709	N/A	NR	-	-	-	-
R44140388[280]	1-3/16 "	R4133708	R4133708	R4166872	NR	-	-	-	-
R44141152[381]	3-3/8 "	R42R55200	R42R55199[346]	R4066780	R4090021	-	-	-	-
R44141152[381]	3-3/8 "	R42R55200	R42R55199[346]	R4066780	R4090021	-	-	-	-
R44140387	1-1/16 "	R4133709	R4133709	N/A	NR	-	-	-	-
R44140387	1-1/16 "	R4133709	R4133709	N/A	NR	-	-	-	-
R44141480[405]	3-3/8 "	R42R55200	R42R55199[346]	R4066780	R4090021	-	-	-	-
R44141480[405]	3-3/8 "	R42R55200	R42R55199[346]	R4066780	R4090021	-	-	-	-
R44141483[405]	3-3/8 "	R42R55200	R42R55199	R4066780	R4090021	-	-	-	-
R44141483[405]	3-3/8 "	R42R55200	R42R55199	R4066780	R4090021	-	-	-	-
R44140388[280]	1-3/16 "	R4133708	R4133708	R4166872	NR	-	-	-	-
R44141130[32]	3-3/8 "	R42R55200	R42R55199[346]	R4066780	R4090021	-	-	-	-

MAKE MODEL YEAR AXLE CODE AXLE WEIGHT	AXLE & BRK. TYPE	BRK. MFG.	BRAKE SIZE	FMSI	MERITOR DISC PAD OR BRAKE SHOE	MERITOR GUIDE PIN OR RETURN SPRING KIT	MERITOR CALIPER HWD. KIT OR RETURN SPRING KIT	MERITOR ADJUSTER KIT (LEFT WHEEL)	MERITOR ADJUSTER KIT (RIGHT WHEEL)
GMC / CHEV(Cont.)									
P-30, P-3500 SERIES-1 TON FORWARD CONTROL AND MOTOR HOME CHASSIS(Cont.)									
1987									
Dual Rear Wheels Except									
I-Beam	Fd	BX		7081 - D149	MD149	R40H5010	R40H5529	NR	NR
Dual Rear Wheels with									
I-Beam	Fd	BX		7081 - D149	MD149	R40H5010	R40H5529	NR	NR
	Fd	BX		7081 - D149	MD149	R40H5010	R40H5529	NR	NR
Motor Home Chassis	Ra	GM	13 " x 3-1/2 "	2157T - 452	R46452	R40H378	R40H7055	R40H2588	R40H2589
	Ra	GM	13 " x 3-1/2 "	2157T - 452	R46452	R40H378	R40H7055	R40H2588	R40H2589
Motor Home Chassis Except									
I-Beam	Fd	BX		7081 - D149	MD149	R40H5010	R40H5529	NR	NR
	Fd	BX		7081 - D149	MD149	R40H5010	R40H5529	NR	NR
Motor Home Chassis With									
I-Beam	Fd	BX		7081 - D149	MD149	R40H5010	R40H5529	NR	NR
Motor Home Chassis With									
I-Beam and Rear Disc Brake	Fd	BX		7081 - D149	MD149	R40H5010	R40H5529	NR	NR
Motor Home Chassis With									
Rear Disc Brake	Fd	BX		7081 - D149	MD149	R40H5010	R40H5529	NR	NR
	Rd	BX		7081 - D149	MD149	R40H5010	R40H5529	NR	NR
	Rd	BX		7081 - D149	MD149	R40H5010	R40H5529	NR	NR
8,400 lb. GVW	Fd	GM		7280 - D392	MD392	R40H5004DP	R40H5500	NR	NR
	Fd	GM		7280 - D392	MD392	R40H5004DP	R40H5500	NR	NR
	Ra	GM	13 " x 2-1/2 "	2042AT - 451	R46451	R40H378	R40H7055	R40H2588	R40H2589
	Ra	GM	13 " x 2-1/2 "	2042AT - 451	R46451	R40H378	R40H7055	R40H2588	R40H2589
Dual Rear Wheels									
9,000, 12,500lb. GVW	Ra	GM	13 " x 3-1/2 "	2157T - 452	R46452	R40H378	R40H7055	R40H2588	R40H2589
Single Rear Wheels									
9,000, 12,500lb. GVW	Fd	BX		7081 - D149	MD149	R40H5010	R40H5529	NR	NR
	Fd	BX		7081 - D149	MD149	R40H5010	R40H5529	NR	NR
	Ra	GM	13 " x 3-1/2 "	2157T - 452	R46452	R40H378	R40H7055	R40H2588	R40H2589
	Ra	GM	13 " x 3-1/2 "	2157T - 452	R46452	R40H378	R40H7055	R40H2588	R40H2589
14,500 lb. GVW	Fd	BX		7081 - D149	MD149	R40H5010	R40H5529	NR	NR
	Fd	BX		7081 - D149	MD149	R40H5010	R40H5529	NR	NR
	Rd	BX		7081 - D149	MD149	R40H5010	R40H5529	NR	NR
	Rd	BX		7081 - D149	MD149	R40H5010	R40H5529	NR	NR
1986									
Dual Rear Wheels	Ra	GM	13 " x 3-1/2 "	2157T - 452	R46452	R40H378	R40H7055	R40H2588	R40H2589
Dual Rear Wheels Except									
I-Beam	Fd	BX		7081 - D149	MD149	R40H5010	R40H5529	NR	NR
	Fd	BX		7081 - D149	MD149	R40H5010	R40H5529	NR	NR
Dual Rear Wheels with									
I-Beam	Fd	BX		7081 - D149	MD149	R40H5010	R40H5529	NR	NR
	Fd	BX		7081 - D149	MD149	R40H5010	R40H5529	NR	NR
Motor Home Chassis	Ra	GM	13 " x 3-1/2 "	2157T - 452	R46452	R40H378	R40H7055	R40H2588	R40H2589
	Ra	GM	13 " x 3-1/2 "	2157T - 452	R46452	R40H378	R40H7055	R40H2588	R40H2589
Motor Home Chassis Except									
I-Beam	Fd	BX		7081 - D149	MD149	R40H5010	R40H5529	NR	NR
	Fd	BX		7081 - D149	MD149	R40H5010	R40H5529	NR	NR
Motor Home Chassis With									
I-Beam	Fd	BX		7081 - D149	MD149	R40H5010	R40H5529	NR	NR
Motor Home Chassis With									
I-Beam and Rear Disc Brake	Fd	BX		7081 - D149	MD149	R40H5010	R40H5529	NR	NR
Motor Home Chassis With									
Rear Disc Brake	Fd	BX		7081 - D149	MD149	R40H5010	R40H5529	NR	NR
	Rd	BX		7081 - D149	MD149	R40H5010	R40H5529	NR	NR
	Rd	BX		7081 - D149	MD149	R40H5010	R40H5529	NR	NR
8,400 lb. GVW	Fd	GM		7280 - D392	MD392	R40H5004DP	R40H5500	NR	NR
	Fd	GM		7280 - D392	MD392	R40H5004DP	R40H5500	NR	NR
	Ra	GM	13 " x 2-1/2 "	2042AT - 451	R46451	R40H378	R40H7055	R40H2588	R40H2589
	Ra	GM	13 " x 2-1/2 "	2042AT - 451	R46451	R40H378	R40H7055	R40H2588	R40H2589
Dual Rear Wheels									
9,000, 12,500lb. GVW	Ra	GM	13 " x 3-1/2 "	2157T - 452	R46452	R40H378	R40H7055	R40H2588	R40H2589
Single Rear Wheels									
9,000, 12,500lb. GVW	Fd	BX		7081 - D149	MD149	R40H5010	R40H5529	NR	NR
	Fd	BX		7081 - D149	MD149	R40H5010	R40H5529	NR	NR

32 - For rotor only use R44141480

280 - 10 1/2" Ring Gear

282 - 10 1/2" Ring Gear, First Design; Use 3 3/8" Outside Diameter Axle Tubes

346 - 4500 lb. Casting Number 2238451452, 10mm Inlet

381 - Rotor and Hub One Piece Assembly W/O ABS Ring

405 - Rotor Only

MERITOR DRUM OR ROTOR NO.	CALIPER OR CYLINDER BORE SIZE	MERITOR CALIPER OR WHEEL CYLINDER (LEFT)	MERITOR CALIPER OR WHEEL CYLINDER (RIGHT)	MERITOR CALIPER OR WHEEL CYLINDER REPAIR KIT	MERITOR CALIPER PISTON	MERITOR MASTER CYLINDER	MERITOR MASTER CYLINDER KIT	MERITOR BRAKE HOSE (LEFT)	MERITOR BRAKE HOSE (RIGHT)
GMC / CHEV(Cont.)									
P-30, P-3500 SERIES-1 TON FORWARD CONTROL AND MOTOR HOME CHASSIS(Cont.)									
R44141130[32]	3-3/8 "	R42R55200	R42R55199[346]	R4066780	R4090021	-	-	-	-
R44141508[32]	3-3/8 "	R42R55200	R42R55199[346]	R4066780	R4090021	-	-	-	-
R44141508[32]	3-3/8 "	R42R55200	R42R55199[346]	R4066780	R4090021	-	-	-	-
R44140388[280]	1-3/16 "	R4133708	R4133708	R4166872	NR	-	-	-	-
R44140388[280]	1-3/16 "	R4133708	R4133708	R4166872	NR	-	-	-	-
R44141130[32]	3-3/8 "	R42R55200	R42R55199[346]	R4066780	R4090021	-	-	-	-
R44141130[32]	3-3/8 "	R42R55200	R42R55199[346]	R4066780	R4090021	-	-	-	-
R44141508[32]	3-3/8 "	R42R55200	R42R55199[346]	R4066780	R4090021	-	-	-	-
R44141480[405]	3-3/8 "	R42R55200	R42R55199[346]	R4066780	R4090021	-	-	-	-
R44141480[405]	3-3/8 "	R42R55200	R42R55199[346]	R4066780	R4090021	-	-	-	-
R44141483[405]	3-3/8 "	R42R55200	R42R55199	R4066780	R4090021	-	-	-	-
R44141483[405]	3-3/8 "	R42R55200	R42R55199	R4066780	R4090021	-	-	-	-
R44141186[381]	3-5/32 "	R42R55382	R42R55381	R4066557	R4090068S	-	-	-	-
R44141186[381]	3-5/32 "	R42R55382	R42R55381	R4066557	R4090068S	-	-	-	-
R44140363[282]	1-1/16 "	R4133709	R4133709	N/A	NR	-	-	-	-
R44140363[282]	1-1/16 "	R4133709	R4133709	N/A	NR	-	-	-	-
R44140388[280]	1-3/16 "	R4133708	R4133708	R4166872	NR	-	-	-	-
R44141152[381]	3-3/8 "	R42R55200	R42R55199[346]	R4066780	R4090021	-	-	-	-
R44141152[381]	3-3/8 "	R42R55200	R42R55199[346]	R4066780	R4090021	-	-	-	-
R44140387	1-1/16 "	R4133709	R4133709	N/A	NR	-	-	-	-
R44140387	1-1/16 "	R4133709	R4133709	N/A	NR	-	-	-	-
R44141480[405]	3-3/8 "	R42R55200	R42R55199[346]	R4066780	R4090021	-	-	-	-
R44141480[405]	3-3/8 "	R42R55200	R42R55199[346]	R4066780	R4090021	-	-	-	-
R44141483[405]	3-3/8 "	R42R55200	R42R55199	R4066780	R4090021	-	-	-	-
R44141483[405]	3-3/8 "	R42R55200	R42R55199	R4066780	R4090021	-	-	-	-
R44140388[280]	1-3/16 "	R4133708	R4133708	R4166872	NR	-	-	-	-
R44141130[32]	3-3/8 "	R42R55200	R42R55199[346]	R4066780	R4090021	-	-	-	-
R44141130[32]	3-3/8 "	R42R55200	R42R55199[346]	R4066780	R4090021	-	-	-	-
R44141508[32]	3-3/8 "	R42R55200	R42R55199[346]	R4066780	R4090021	-	-	-	-
R44141508[32]	3-3/8 "	R42R55200	R42R55199[346]	R4066780	R4090021	-	-	-	-
R44140388[280]	1-3/16 "	R4133708	R4133708	R4166872	NR	-	-	-	-
R44140388[280]	1-3/16 "	R4133708	R4133708	R4166872	NR	-	-	-	-
R44141130[32]	3-3/8 "	R42R55200	R42R55199[346]	R4066780	R4090021	-	-	-	-
R44141130[32]	3-3/8 "	R42R55200	R42R55199[346]	R4066780	R4090021	-	-	-	-
R44141508[32]	3-3/8 "	R42R55200	R42R55199[346]	R4066780	R4090021	-	-	-	-
R44141480[405]	3-3/8 "	R42R55200	R42R55199[346]	R4066780	R4090021	-	-	-	-
R44141480[405]	3-3/8 "	R42R55200	R42R55199[346]	R4066780	R4090021	-	-	-	-
R44141483[405]	3-3/8 "	R42R55200	R42R55199	R4066780	R4090021	-	-	-	-
R44141483[405]	3-3/8 "	R42R55200	R42R55199	R4066780	R4090021	-	-	-	-
R44141186[381]	3-5/32 "	R42R55382	R42R55381	R4066557	R4090068S	-	-	-	-
R44141186[381]	3-5/32 "	R42R55382	R42R55381	R4066557	R4090068S	-	-	-	-
R44140363[282]	1-1/16 "	R4133709	R4133709	N/A	NR	-	-	-	-
R44140363[282]	1-1/16 "	R4133709	R4133709	N/A	NR	-	-	-	-
R44140388[280]	1-3/16 "	R4133708	R4133708	R4166872	NR	-	-	-	-
R44141152[381]	3-3/8 "	R42R55200	R42R55199[346]	R4066780	R4090021	-	-	-	-
R44141152[381]	3-3/8 "	R42R55200	R42R55199[346]	R4066780	R4090021	-	-	-	-

MAKE MODEL YEAR AXLE CODE AXLE WEIGHT	AXLE & BRK. TYPE	BRK. MFG.	BRAKE SIZE	FMSI	MERITOR DISC PAD OR BRAKE SHOE	MERITOR GUIDE PIN OR RETURN SPRING KIT	MERITOR CALIPER HWD. KIT OR RETURN SPRING KIT	MERITOR ADJUSTER KIT (LEFT WHEEL)	MERITOR ADJUSTER KIT (RIGHT WHEEL)
GMC / CHEV(Cont.)									
P-30, P-3500 SERIES-1 TON FORWARD CONTROL AND MOTOR HOME CHASSIS(Cont.)									
1986									
	Ra	GM	13 " x 3-1/2 "	2157T - 452	R46452	R40H378	R40H7055	R40H2588	R40H2589
	Ra	GM	13 " x 3-1/2 "	2157T - 452	R46452	R40H378	R40H7055	R40H2588	R40H2589
14,500 lb. GVW	Fd	BX		7081 - D149	MD149	R40H5010	R40H5529	NR	NR
	Fd	BX		7081 - D149	MD149	R40H5010	R40H5529	NR	NR
	Rd	BX		7081 - D149	MD149	R40H5010	R40H5529	NR	NR
	Rd	BX		7081 - D149	MD149	R40H5010	R40H5529	NR	NR
1985 Dual Rear Wheels	Ra	GM	13 " x 3-1/2 "	2157T - 452	R46452	R40H378	R40H7055	R40H2588	R40H2589
Dual Rear Wheels Except I-Beam	Fd	BX		7081 - D149	MD149	R40H5010	R40H5529	NR	NR
	Fd	BX		7081 - D149	MD149	R40H5010	R40H5529	NR	NR
Dual Rear Wheels with I-Beam	Fd	BX		7081 - D149	MD149	R40H5010	R40H5529	NR	NR
	Fd	BX		7081 - D149	MD149	R40H5010	R40H5529	NR	NR
Motor Home Chassis	Ra	GM	13 " x 3-1/2 "	2157T - 452	R46452	R40H378	R40H7055	R40H2588	R40H2589
	Ra	GM	13 " x 3-1/2 "	2157T - 452	R46452	R40H378	R40H7055	R40H2588	R40H2589
Motor Home Chassis Except I-Beam	Fd	BX		7081 - D149	MD149	R40H5010	R40H5529	NR	NR
	Fd	BX		7081 - D149	MD149	R40H5010	R40H5529	NR	NR
Motor Home Chassis With I-Beam	Fd	BX		7081 - D149	MD149	R40H5010	R40H5529	NR	NR
Motor Home Chassis With I-Beam and Rear Disc Brake	Fd	BX		7081 - D149	MD149	R40H5010	R40H5529	NR	NR
Motor Home Chassis With Rear Disc Brake	Fd	BX		7081 - D149	MD149	R40H5010	R40H5529	NR	NR
	Rd	BX		7081 - D149	MD149	R40H5010	R40H5529	NR	NR
	Rd	BX		7081 - D149	MD149	R40H5010	R40H5529	NR	NR
8,400 lb. GVW	Fd	GM		7280 - D392	MD392	R40H5004DP	R40H5500	NR	NR
	Fd	GM		7280 - D392	MD392	R40H5004DP	R40H5500	NR	NR
	Ra	GM	13 " x 2-1/2 "	2042AT - 451	R46451	R40H378	R40H7055	R40H2588	R40H2589
	Ra	GM	13 " x 2-1/2 "	2042AT - 451	R46451	R40H378	R40H7055	R40H2588	R40H2589
Dual Rear Wheels 9,000, 12,500lb. GVW	Ra	GM	13 " x 3-1/2 "	2157T - 452	R46452	R40H378	R40H7055	R40H2588	R40H2589
Single Rear Wheels 9,000, 12,500lb. GVW	Fd	BX		7081 - D149	MD149	R40H5010	R40H5529	NR	NR
	Fd	BX		7081 - D149	MD149	R40H5010	R40H5529	NR	NR
	Ra	GM	13 " x 3-1/2 "	2157T - 452	R46452	R40H378	R40H7055	R40H2588	R40H2589
	Ra	GM	13 " x 3-1/2 "	2157T - 452	R46452	R40H378	R40H7055	R40H2588	R40H2589
14,500 lb. GVW	Fd	BX		7081 - D149	MD149	R40H5010	R40H5529	NR	NR
	Fd	BX		7081 - D149	MD149	R40H5010	R40H5529	NR	NR
	Rd	BX		7081 - D149	MD149	R40H5010	R40H5529	NR	NR
	Rd	BX		7081 - D149	MD149	R40H5010	R40H5529	NR	NR
1984									
	Fd	BX		7081 - D149	MD149	R40H5010	R40H5529	NR	NR
	Fd	BX		7081 - D149	MD149	R40H5010	R40H5529	NR	NR
	Fd	BX		7081 - D149	MD149	R40H5010	R40H5529	NR	NR
	Ra	GM	13 " x 2-1/2 "	2042AT - 451	R46451	R40H378	R40H7055	R40H2588	R40H2589
	Rd	BX		7081 - D149	MD149	R40H5010	R40H5529	NR	NR
	Rd	BX		7081 - D149	MD149	R40H5010	R40H5529	NR	NR
	Ra	GM	13 " x 2-1/2 "	2042AT - 451	R46451	R40H378	R40H7055	R40H2588	R40H2589
Dual Rear Wheels	Ra	GM	13 " x 3-1/2 "	2157T - 452	R46452	R40H378	R40H7055	R40H2588	R40H2589
	Ra	GM	13 " x 3-1/2 "	2157T - 452	R46452	R40H378	R40H7055	R40H2588	R40H2589
Motor Home Chassis	Fd	BX		7081 - D149	MD149	R40H5010	R40H5529	NR	NR
	Ra	GM	13 " x 3-1/2 "	2157T - 452	R46452	R40H378	R40H7055	R40H2588	R40H2589
	Ra	GM	13 " x 3-1/2 "	2157T - 452	R46452	R40H378	R40H7055	R40H2588	R40H2589
Motor Home Chassis With Rear Disc Brake	Fd	BX		7081 - D149	MD149	R40H5010	R40H5529	NR	NR
	Fd	BX		7081 - D149	MD149	R40H5010	R40H5529	NR	NR
	Rd	BX		7081 - D149	MD149	R40H5010	R40H5529	NR	NR
	Rd	BX		7081 - D149	MD149	R40H5010	R40H5529	NR	NR
Single Rear Wheels	Ra	GM	13 " x 3-1/2 "	2157T - 452	R46452	R40H378	R40H7055	R40H2588	R40H2589
	Ra	GM	13 " x 3-1/2 "	2157T - 452	R46452	R40H378	R40H7055	R40H2588	R40H2589
7,500, 8,200lb. GVW	Fd	GM		7084A - D153	MD392	R40H5004DP	R40H5500	NR	NR

32 - For rotor only use R44141480

280 - 10 1/2" Ring Gear

282 - 10 1/2" Ring Gear, First Design; Use 3 3/8" Outside Diameter Axle Tubes

346 - 4500 lb. Casting Number 2238451452, 10mm Inlet

381 - Rotor and Hub One Piece Assembly W/O ABS Ring

405 - Rotor Only

MERITOR DRUM OR ROTOR NO.	CALIPER OR CYLINDER BORE SIZE	MERITOR CALIPER OR WHEEL CYLINDER (LEFT)	MERITOR CALIPER OR WHEEL CYLINDER (RIGHT)	MERITOR CALIPER OR WHEEL CYLINDER REPAIR KIT	MERITOR CALIPER PISTON	MERITOR MASTER CYLINDER	MERITOR MASTER CYLINDER KIT	MERITOR BRAKE HOSE (LEFT)	MERITOR BRAKE HOSE (RIGHT)
									GMC / CHEV(Cont.)
P-30, P-3500 SERIES-1 TON FORWARD CONTROL AND MOTOR HOME CHASSIS(Cont.)									
R44140387	1-1/16 "	R4133709	R4133709	N/A	NR	-	-	-	-
R44140387	1-1/16 "	R4133709	R4133709	N/A	NR	-	-	-	-
R44141480[405]	3-3/8 "	R42R55200	R42R55199[346]	R4066780	R4090021	-	-	-	-
R44141480[405]	3-3/8 "	R42R55200	R42R55199[346]	R4066780	R4090021	-	-	-	-
R44141483[405]	3-3/8 "	R42R55200	R42R55199	R4066780	R4090021	-	-	-	-
R44141483[405]	3-3/8 "	R42R55200	R42R55199	R4066780	R4090021	-	-	-	-
R44140388[280]	1-3/16 "	R4133708	R4133708	R4166872	NR	-	-	-	-
R44141130[32]	3-3/8 "	R42R55200	R42R55199[346]	R4066780	R4090021	-	-	-	-
R44141130[32]	3-3/8 "	R42R55200	R42R55199[346]	R4066780	R4090021	-	-	-	-
R44141508[32]	3-3/8 "	R42R55200	R42R55199[346]	R4066780	R4090021	-	-	-	-
R44141508[32]	3-3/8 "	R42R55200	R42R55199[346]	R4066780	R4090021	-	-	-	-
R44140388[280]	1-3/16 "	R4133708	R4133708	R4166872	NR	-	-	-	-
R44140388[280]	1-3/16 "	R4133708	R4133708	R4166872	NR	-	-	-	-
R44141130[32]	3-3/8 "	R42R55200	R42R55199[346]	R4066780	R4090021	-	-	-	-
R44141130[32]	3-3/8 "	R42R55200	R42R55199[346]	R4066780	R4090021	-	-	-	-
R44141508[32]	3-3/8 "	R42R55200	R42R55199[346]	R4066780	R4090021	-	-	-	-
R44141480[405]	3-3/8 "	R42R55200	R42R55199[346]	R4066780	R4090021	-	-	-	-
R44141480[405]	3-3/8 "	R42R55200	R42R55199[346]	R4066780	R4090021	-	-	-	-
R44141483[405]	3-3/8 "	R42R55200	R42R55199	R4066780	R4090021	-	-	-	-
R44141483[405]	3-3/8 "	R42R55200	R42R55199	R4066780	R4090021	-	-	-	-
R44141186[381]	3-5/32 "	R42R55382	R42R55381	R4066557	R4090068S	-	-	-	-
R44141186[381]	3-5/32 "	R42R55382	R42R55381	R4066557	R4090068S	-	-	-	-
R44140363[282]	1-1/16 "	R4133709	R4133709	N/A	NR	-	-	-	-
R44140363[282]	1-1/16 "	R4133709	R4133709	N/A	NR	-	-	-	-
R44140388[280]	1-3/16 "	R4133708	R4133708	R4166872	NR	-	-	-	-
R44141152[381]	3-3/8 "	R42R55200	R42R55199[346]	R4066780	R4090021	-	-	-	-
R44141152[381]	3-3/8 "	R42R55200	R42R55199[346]	R4066780	R4090021	-	-	-	-
R44140387	1-1/16 "	R4133709	R4133709	N/A	NR	-	-	-	-
R44140387	1-1/16 "	R4133709	R4133709	N/A	NR	-	-	-	-
R44141480[405]	3-3/8 "	R42R55200	R42R55199[346]	R4066780	R4090021	-	-	-	-
R44141480[405]	3-3/8 "	R42R55200	R42R55199[346]	R4066780	R4090021	-	-	-	-
R44141483[405]	3-3/8 "	R42R55200	R42R55199	R4066780	R4090021	-	-	-	-
R44141483[405]	3-3/8 "	R42R55200	R42R55199	R4066780	R4090021	-	-	-	-
R44141480[405]	3-3/8 "	R42R55200	R42R55199[346]	R4066780	R4090021	-	-	-	-
R44141130[32]	3-3/8 "	R42R55200	R42R55199[346]	R4066780	R4090021	-	-	-	-
R44141480[405]	3-3/8 "	R42R55200	R42R55199[346]	R4066780	R4090021	-	-	-	-
R44140363[282]	1-1/16 "	R4133709	R4133709	N/A	NR	-	-	-	-
R44141483[405]	3-3/8 "	R42R55200	R42R55199	R4066780	R4090021	-	-	-	-
R44141483[405]	3-3/8 "	R42R55200	R42R55199	R4066780	R4090021	-	-	-	-
R44140363[282]	1-1/16 "	R4133709	R4133709	N/A	NR	-	-	-	-
R44140388[280]	1-3/16 "	R4133708	R4133708	R4166872	NR	-	-	-	-
R44140388[280]	1-3/16 "	R4133708	R4133708	R4166872	NR	-	-	-	-
R44141130[32]	3-3/8 "	R42R55200	R42R55199[346]	R4066780	R4090021	-	-	-	-
R44140388[280]	1-3/16 "	R4133708	R4133708	R4166872	NR	-	-	-	-
R44140388[280]	1-3/16 "	R4133708	R4133708	R4166872	NR	-	-	-	-
R44141480[405]	3-3/8 "	R42R55200	R42R55199[346]	R4066780	R4090021	-	-	-	-
R44141480[405]	3-3/8 "	R42R55200	R42R55199[346]	R4066780	R4090021	-	-	-	-
R44141483[405]	3-3/8 "	R42R55200	R42R55199	R4066780	R4090021	-	-	-	-
R44141483[405]	3-3/8 "	R42R55200	R42R55199	R4066780	R4090021	-	-	-	-
R44140387	1-3/16 "	R4133708	R4133708	R4166872	NR	-	-	-	-
R44140387	1-3/16 "	R4133708	R4133708	R4166872	NR	-	-	-	-
R44141186[381]	3-5/32 "	R42R55382	R42R55381	R4066557	R4090068S	-	-	-	-

MAKE MODEL YEAR AXLE CODE AXLE WEIGHT	AXLE & BRK. TYPE	BRK. MFG.	BRAKE SIZE	FMSI	MERITOR DISC PAD OR BRAKE SHOE	MERITOR GUIDE PIN OR RETURN SPRING KIT	MERITOR CALIPER HWD. KIT OR RETURN SPRING KIT	MERITOR ADJUSTER KIT (LEFT WHEEL)	MERITOR ADJUSTER KIT (RIGHT WHEEL)
GMC / CHEV(Cont.)									
P-30, P-3500 SERIES-1 TON FORWARD CONTROL AND MOTOR HOME CHASSIS(Cont.)									
1984									
	Fd	GM		7084A - D153	MD392	R40H5004DP	R40H5500	NR	NR
Dual Rear Wheels									
9,000, 11,500lb. GVW	Fd	BX		7081 - D149	MD149	R40H5010	R40H5529	NR	NR
	Fd	BX		7081 - D149	MD149	R40H5010	R40H5529	NR	NR
Single Rear Wheels									
9,000, 11,500lb. GVW	Fd	BX		7081 - D149	MD149	R40H5010	R40H5529	NR	NR
	Fd	BX		7081 - D149	MD149	R40H5010	R40H5529	NR	NR
1983									
	Fd	BX		7081 - D149	MD149	R40H5010	R40H5529	NR	NR
	Fd	BX		7081 - D149	MD149	R40H5010	R40H5529	NR	NR
	Fd	BX		7081 - D149	MD149	R40H5010	R40H5529	NR	NR
	Ra	GM	13 " x 2-1/2 "	2042AT - 451	R46451	R40H378	R40H7055	R40H2588	R40H2589
	Rd	BX		7081 - D149	MD149	R40H5010	R40H5529	NR	NR
	Rd	BX		7081 - D149	MD149	R40H5010	R40H5529	NR	NR
	Ra	GM	13 " x 2-1/2 "	2042AT - 451	R46451	R40H378	R40H7055	R40H2588	R40H2589
Dual Rear Wheels	Ra	GM	13 " x 3-1/2 "	2157T - 452	R46452	R40H378	R40H7055	R40H2588	R40H2589
	Ra	GM	13 " x 3-1/2 "	2157T - 452	R46452	R40H378	R40H7055	R40H2588	R40H2589
Motor Home Chassis	Fd	BX		7081 - D149	MD149	R40H5010	R40H5529	NR	NR
	Ra	GM	13 " x 3-1/2 "	2157T - 452	R46452	R40H378	R40H7055	R40H2588	R40H2589
	Ra	GM	13 " x 3-1/2 "	2157T - 452	R46452	R40H378	R40H7055	R40H2588	R40H2589
Motor Home Chassis With									
Rear Disc Brake	Fd	BX		7081 - D149	MD149	R40H5010	R40H5529	NR	NR
	Fd	BX		7081 - D149	MD149	R40H5010	R40H5529	NR	NR
	Rd	BX		7081 - D149	MD149	R40H5010	R40H5529	NR	NR
	Rd	BX		7081 - D149	MD149	R40H5010	R40H5529	NR	NR
Single Rear Wheels	Ra	GM	13 " x 3-1/2 "	2157T - 452	R46452	R40H378	R40H7055	R40H2588	R40H2589
	Ra	GM	13 " x 3-1/2 "	2157T - 452	R46452	R40H378	R40H7055	R40H2588	R40H2589
7,500, 8,200lb. GVW	Fd	GM		7084A - D153	MD392	R40H5004DP	R40H5500	NR	NR
	Fd	GM		7084A - D153	MD392	R40H5004DP	R40H5500	NR	NR
Dual Rear Wheels									
9,000, 11,500lb. GVW	Fd	BX		7081 - D149	MD149	R40H5010	R40H5529	NR	NR
	Fd	BX		7081 - D149	MD149	R40H5010	R40H5529	NR	NR
Single Rear Wheels									
9,000, 11,500lb. GVW	Fd	BX		7081 - D149	MD149	R40H5010	R40H5529	NR	NR
	Fd	BX		7081 - D149	MD149	R40H5010	R40H5529	NR	NR
1982									
	Fd	BX		7081 - D149	MD149	R40H5010	R40H5529	NR	NR
	Fd	BX		7081 - D149	MD149	R40H5010	R40H5529	NR	NR
	Fd	BX		7081 - D149	MD149	R40H5010	R40H5529	NR	NR
	Ra	GM	13 " x 2-1/2 "	2042AT - 451	R46451	R40H378	R40H7055	R40H2588	R40H2589
	Rd	BX		7081 - D149	MD149	R40H5010	R40H5529	NR	NR
	Rd	BX		7081 - D149	MD149	R40H5010	R40H5529	NR	NR
	Ra	GM	13 " x 2-1/2 "	2042AT - 451	R46451	R40H378	R40H7055	R40H2588	R40H2589
Dual Rear Wheels	Ra	GM	13 " x 3-1/2 "	2157T - 452	R46452	R40H378	R40H7055	R40H2588	R40H2589
	Ra	GM	13 " x 3-1/2 "	2157T - 452	R46452	R40H378	R40H7055	R40H2588	R40H2589
Motor Home Chassis	Fd	BX		7081 - D149	MD149	R40H5010	R40H5529	NR	NR
	Ra	GM	13 " x 3-1/2 "	2157T - 452	R46452	R40H378	R40H7055	R40H2588	R40H2589
	Ra	GM	13 " x 3-1/2 "	2157T - 452	R46452	R40H378	R40H7055	R40H2588	R40H2589
Motor Home Chassis With									
Rear Disc Brake	Fd	BX		7081 - D149	MD149	R40H5010	R40H5529	NR	NR
	Fd	BX		7081 - D149	MD149	R40H5010	R40H5529	NR	NR
	Rd	BX		7081 - D149	MD149	R40H5010	R40H5529	NR	NR
	Rd	BX		7081 - D149	MD149	R40H5010	R40H5529	NR	NR
Single Rear Wheels	Ra	GM	13 " x 3-1/2 "	2157T - 452	R46452	R40H378	R40H7055	R40H2588	R40H2589
	Ra	GM	13 " x 3-1/2 "	2157T - 452	R46452	R40H378	R40H7055	R40H2588	R40H2589
7,500, 8,200lb. GVW	Fd	GM		7084A - D153	MD392	R40H5004DP	R40H5500	NR	NR
	Fd	GM		7084A - D153	MD392	R40H5004DP	R40H5500	NR	NR
Dual Rear Wheels									
9,000, 11,500lb. GVW	Fd	BX		7081 - D149	MD149	R40H5010	R40H5529	NR	NR
	Fd	BX		7081 - D149	MD149	R40H5010	R40H5529	NR	NR
Single Rear Wheels									
9,000, 11,500lb. GVW	Fd	BX		7081 - D149	MD149	R40H5010	R40H5529	NR	NR
	Fd	BX		7081 - D149	MD149	R40H5010	R40H5529	NR	NR

32 - For rotor only use R44141480

280 - 10 1/2" Ring Gear

282 - 10 1/2" Ring Gear, First Design; Use 3 3/8" Outside Diameter Axle Tubes

346 - 4500 lb. Casting Number 2238451452, 10mm Inlet

381 - Rotor and Hub One Piece Assembly W/O ABS Ring

405 - Rotor Only

MERITOR DRUM OR ROTOR NO.	CALIPER OR CYLINDER BORE SIZE	MERITOR CALIPER OR WHEEL CYLINDER (LEFT)	MERITOR CALIPER OR WHEEL CYLINDER (RIGHT)	MERITOR CALIPER OR WHEEL CYLINDER REPAIR KIT	MERITOR CALIPER PISTON	MERITOR MASTER CYLINDER	MERITOR MASTER CYLINDER KIT	MERITOR BRAKE HOSE (LEFT)	MERITOR BRAKE HOSE (RIGHT)
GMC / CHEV(Cont.)									
P-30, P-3500 SERIES-1 TON FORWARD CONTROL AND MOTOR HOME CHASSIS(Cont.)									
R44141186[381]	3-5/32 "	R42R55382	R42R55381	R4066557	R4090068S	-	-	-	-
R44141130[32]	3-3/8 "	R42R55200	R42R55199[346]	R4066780	R4090021	-	-	-	-
R44141130[32]	3-3/8 "	R42R55200	R42R55199[346]	R4066780	R4090021	-	-	-	-
R44141152[381]	3-3/8 "	R42R55200	R42R55199[346]	R4066780	R4090021	-	-	-	-
R44141152[381]	3-3/8 "	R42R55200	R42R55199[346]	R4066780	R4090021	-	-	-	-
R44141130[32]	3-3/8 "	R42R55200	R42R55199[346]	R4066780	R4090021	-	-	-	-
R44141480[405]	3-3/8 "	R42R55200	R42R55199[346]	R4066780	R4090021	-	-	-	-
R44141480[405]	3-3/8 "	R42R55200	R42R55199[346]	R4066780	R4090021	-	-	-	-
R44140363[282]	1-1/16 "	R4133709	R4133709	N/A	NR	-	-	-	-
R44141483[405]	3-3/8 "	R42R55200	R42R55199	R4066780	R4090021	-	-	-	-
R44141483[405]	3-3/8 "	R42R55200	R42R55199	R4066780	R4090021	-	-	-	-
R44140363[282]	1-1/16 "	R4133709	R4133709	N/A	NR	-	-	-	-
R44140388[280]	1-3/16 "	R4133708	R4133708	R4166872	NR	-	-	-	-
R44140388[280]	1-3/16 "	R4133708	R4133708	R4166872	NR	-	-	-	-
R44141130[32]	3-3/8 "	R42R55200	R42R55199[346]	R4066780	R4090021	-	-	-	-
R44140388[280]	1-3/16 "	R4133708	R4133708	R4166872	NR	-	-	-	-
R44140388[280]	1-3/16 "	R4133708	R4133708	R4166872	NR	-	-	-	-
R44141480[405]	3-3/8 "	R42R55200	R42R55199[346]	R4066780	R4090021	-	-	-	-
R44141480[405]	3-3/8 "	R42R55200	R42R55199[346]	R4066780	R4090021	-	-	-	-
R44141483[405]	3-3/8 "	R42R55200	R42R55199	R4066780	R4090021	-	-	-	-
R44141483[405]	3-3/8 "	R42R55200	R42R55199	R4066780	R4090021	-	-	-	-
R44140387	1-3/16 "	R4133708	R4133708	R4166872	NR	-	-	-	-
R44140387	1-3/16 "	R4133708	R4133708	R4166872	NR	-	-	-	-
R44141186[381]	3-5/32 "	R42R55382	R42R55381	R4066557	R4090068S	-	-	-	-
R44141186[381]	3-5/32 "	R42R55382	R42R55381	R4066557	R4090068S	-	-	-	-
R44141130[32]	3-3/8 "	R42R55200	R42R55199[346]	R4066780	R4090021	-	-	-	-
R44141130[32]	3-3/8 "	R42R55200	R42R55199[346]	R4066780	R4090021	-	-	-	-
R44141152[381]	3-3/8 "	R42R55200	R42R55199[346]	R4066780	R4090021	-	-	-	-
R44141152[381]	3-3/8 "	R42R55200	R42R55199[346]	R4066780	R4090021	-	-	-	-
R44141130[32]	3-3/8 "	R42R55200	R42R55199[346]	R4066780	R4090021	-	-	-	-
R44141480[405]	3-3/8 "	R42R55200	R42R55199[346]	R4066780	R4090021	-	-	-	-
R44141480[405]	3-3/8 "	R42R55200	R42R55199[346]	R4066780	R4090021	-	-	-	-
R44140363[282]	1-1/16 "	R4133709	R4133709	N/A	NR	-	-	-	-
R44141483[405]	3-3/8 "	R42R55200	R42R55199	R4066780	R4090021	-	-	-	-
R44141483[405]	3-3/8 "	R42R55200	R42R55199	R4066780	R4090021	-	-	-	-
R44140363[282]	1-1/16 "	R4133709	R4133709	N/A	NR	-	-	-	-
R44140388[280]	1-3/16 "	R4133708	R4133708	R4166872	NR	-	-	-	-
R44140388[280]	1-3/16 "	R4133708	R4133708	R4166872	NR	-	-	-	-
R44141130[32]	3-3/8 "	R42R55200	R42R55199[346]	R4066780	R4090021	-	-	-	-
R44140388[280]	1-3/16 "	R4133708	R4133708	R4166872	NR	-	-	-	-
R44140388[280]	1-3/16 "	R4133708	R4133708	R4166872	NR	-	-	-	-
R44141480[405]	3-3/8 "	R42R55200	R42R55199[346]	R4066780	R4090021	-	-	-	-
R44141480[405]	3-3/8 "	R42R55200	R42R55199[346]	R4066780	R4090021	-	-	-	-
R44141483[405]	3-3/8 "	R42R55200	R42R55199	R4066780	R4090021	-	-	-	-
R44141483[405]	3-3/8 "	R42R55200	R42R55199	R4066780	R4090021	-	-	-	-
R44140387	1-3/16 "	R4133708	R4133708	R4166872	NR	-	-	-	-
R44140387	1-3/16 "	R4133708	R4133708	R4166872	NR	-	-	-	-
R44141186[381]	3-5/32 "	R42R55382	R42R55381	R4066557	R4090068S	-	-	-	-
R44141186[381]	3-5/32 "	R42R55382	R42R55381	R4066557	R4090068S	-	-	-	-
R44141130[32]	3-3/8 "	R42R55200	R42R55199[346]	R4066780	R4090021	-	-	-	-
R44141130[32]	3-3/8 "	R42R55200	R42R55199[346]	R4066780	R4090021	-	-	-	-
R44141152[381]	3-3/8 "	R42R55200	R42R55199[346]	R4066780	R4090021	-	-	-	-
R44141152[381]	3-3/8 "	R42R55200	R42R55199[346]	R4066780	R4090021	-	-	-	-

MAKE MODEL YEAR AXLE CODE AXLE WEIGHT	AXLE & BRK. TYPE	BRK. MFG.	BRAKE SIZE	FMSI	MERITOR DISC PAD OR BRAKE SHOE	MERITOR GUIDE PIN OR RETURN SPRING KIT	MERITOR CALIPER HWD. KIT OR RETURN SPRING KIT	MERITOR ADJUSTER KIT (LEFT WHEEL)	MERITOR ADJUSTER KIT (RIGHT WHEEL)
GMC / CHEV(Cont.)									
P-30, P-3500 SERIES-1 TON FORWARD CONTROL AND MOTOR HOME CHASSIS(Cont.)									
1981									
	Fd	BX		7081 - D149	MD149	R40H5010	R40H5529	NR	NR
	Fd	BX		7081 - D149	MD149	R40H5010	R40H5529	NR	NR
	Fd	BX		7081 - D149	MD149	R40H5010	R40H5529	NR	NR
	Ra	GM	13 " x 2-1/2 "	2042AT - 451	R46451	R40H378	R40H7055	R40H2588	R40H2589
	Rd	BX		7081 - D149	MD149	R40H5010	R40H5529	NR	NR
	Rd	BX		7081 - D149	MD149	R40H5010	R40H5529	NR	NR
	Ra	GM	13 " x 2-1/2 "	2042AT - 451	R46451	R40H378	R40H7055	R40H2588	R40H2589
Dual Rear Wheels	Ra	GM	13 " x 3-1/2 "	2157T - 452	R46452	R40H378	R40H7055	R40H2588	R40H2589
	Ra	GM	13 " x 3-1/2 "	2157T - 452	R46452	R40H378	R40H7055	R40H2588	R40H2589
Motor Home Chassis	Fd	BX		7081 - D149	MD149	R40H5010	R40H5529	NR	NR
	Ra	GM	13 " x 3-1/2 "	2157T - 452	R46452	R40H378	R40H7055	R40H2588	R40H2589
	Ra	GM	13 " x 3-1/2 "	2157T - 452	R46452	R40H378	R40H7055	R40H2588	R40H2589
Motor Home Chassis With Rear Disc Brake	Fd	BX		7081 - D149	MD149	R40H5010	R40H5529	NR	NR
	Fd	BX		7081 - D149	MD149	R40H5010	R40H5529	NR	NR
	Rd	BX		7081 - D149	MD149	R40H5010	R40H5529	NR	NR
	Rd	BX		7081 - D149	MD149	R40H5010	R40H5529	NR	NR
Single Rear Wheels	Ra	GM	13 " x 3-1/2 "	2157T - 452	R46452	R40H378	R40H7055	R40H2588	R40H2589
	Ra	GM	13 " x 3-1/2 "	2157T - 452	R46452	R40H378	R40H7055	R40H2588	R40H2589
7,500, 8,200lb. GVW	Fd	GM		7084A - D153	MD392	R40H5004DP	R40H5500	NR	NR
	Fd	GM		7084A - D153	MD392	R40H5004DP	R40H5500	NR	NR
Dual Rear Wheels 9,000, 11,500lb. GVW	Fd	BX		7081 - D149	MD149	R40H5010	R40H5529	NR	NR
	Fd	BX		7081 - D149	MD149	R40H5010	R40H5529	NR	NR
Single Rear Wheels 9,000, 11,500lb. GVW	Fd	BX		7081 - D149	MD149	R40H5010	R40H5529	NR	NR
	Fd	BX		7081 - D149	MD149	R40H5010	R40H5529	NR	NR
1980									
	Fd	BX		7081 - D149	MD149	R40H5010	R40H5529	NR	NR
	Fd	BX		7081 - D149	MD149	R40H5010	R40H5529	NR	NR
	Fd	BX		7081 - D149	MD149	R40H5010	R40H5529	NR	NR
	Rd	BX		7081 - D149	MD149	R40H5010	R40H5529	NR	NR
Dual Rear Wheels	Rd	BX		7081 - D149	MD149	R40H5010	R40H5529	NR	NR
7,500, 8,200lb. GVW	Fd	GM		7084A - D153	MD392	R40H5004DP	R40H5500	NR	NR
	Fd	GM		7084A - D153	MD392	R40H5004DP	R40H5500	NR	NR
	Ra	GM	13 " x 2-1/2 "	2042AT - 451	R46451	R40H378	R40H7055	R40H2588	R40H2589
	Ra	GM	13 " x 2-1/2 "	2042AT - 451	R46451	R40H378	R40H7055	R40H2588	R40H2589
Dual Rear Wheels 10,000 lb. GVW	Ra	GM	13 " x 3-1/2 "	2157T - 452	R46452	R40H378	R40H7055	R40H2588	R40H2589
	Ra	GM	13 " x 3-1/2 "	2157T - 452	R46452	R40H378	R40H7055	R40H2588	R40H2589
Single Rear Wheels 10,000 lb. GVW	Fd	BX		7081 - D149	MD149	R40H5010	R40H5529	NR	NR
	Fd	BX		7081 - D149	MD149	R40H5010	R40H5529	NR	NR
	Fd	BX		7081 - D149	MD149	R40H5010	R40H5529	NR	NR
	Fd	BX		7081 - D149	MD149	R40H5010	R40H5529	NR	NR
1979									
	Fd	BX		7081 - D149	MD149	R40H5010	R40H5529	NR	NR
	Fd	BX		7081 - D149	MD149	R40H5010	R40H5529	NR	NR
	Fd	BX		7081 - D149	MD149	R40H5010	R40H5529	NR	NR
	Rd	BX		7081 - D149	MD149	R40H5010	R40H5529	NR	NR
Dual Rear Wheels	Rd	BX		7081 - D149	MD149	R40H5010	R40H5529	NR	NR
7,500, 8,200lb. GVW	Fd	GM		7084A - D153	MD392	R40H5004DP	R40H5500	NR	NR
	Fd	GM		7084A - D153	MD392	R40H5004DP	R40H5500	NR	NR
	Ra	GM	13 " x 2-1/2 "	2042AT - 451	R46451	R40H378	R40H7055	R40H2588	R40H2589
	Ra	GM	13 " x 2-1/2 "	2042AT - 451	R46451	R40H378	R40H7055	R40H2588	R40H2589
Dual Rear Wheels 10,000 lb. GVW	Ra	GM	13 " x 3-1/2 "	2157T - 452	R46452	R40H378	R40H7055	R40H2588	R40H2589
	Ra	GM	13 " x 3-1/2 "	2157T - 452	R46452	R40H378	R40H7055	R40H2588	R40H2589
Single Rear Wheels 10,000 lb. GVW	Fd	BX		7081 - D149	MD149	R40H5010	R40H5529	NR	NR
	Fd	BX		7081 - D149	MD149	R40H5010	R40H5529	NR	NR
	Fd	BX		7081 - D149	MD149	R40H5010	R40H5529	NR	NR
	Fd	BX		7081 - D149	MD149	R40H5010	R40H5529	NR	NR

32 - For rotor only use R44141480

280 - 10 1/2" Ring Gear

282 - 10 1/2" Ring Gear, First Design; Use 3 3/8" Outside Diameter Axle Tubes

346 - 4500 lb. Casting Number 2238451452, 10mm Inlet

381 - Rotor and Hub One Piece Assembly W/O ABS Ring

405 - Rotor Only

MERITOR DRUM OR ROTOR NO.	CALIPER OR CYLINDER BORE SIZE	MERITOR CALIPER OR WHEEL CYLINDER (LEFT)	MERITOR CALIPER OR WHEEL CYLINDER (RIGHT)	MERITOR CALIPER OR WHEEL CYLINDER REPAIR KIT	MERITOR CALIPER PISTON	MERITOR MASTER CYLINDER	MERITOR MASTER CYLINDER KIT	MERITOR BRAKE HOSE (LEFT)	MERITOR BRAKE HOSE (RIGHT)
									GMC / CHEV(Cont.)
P-30, P-3500 SERIES-1 TON FORWARD CONTROL AND MOTOR HOME CHASSIS(Cont.)									
R44141480[405]	3-3/8 "	R42R55200	R42R55199[346]	R4066780	R4090021	-	-	-	-
R44141480[405]	3-3/8 "	R42R55200	R42R55199[346]	R4066780	R4090021	-	-	-	-
R44141130[32]	3-3/8 "	R42R55200	R42R55199[346]	R4066780	R4090021	-	-	-	-
R44140363[282]	1-1/16 "	R4133709	R4133709	N/A	NR	-	-	-	-
R44141483[405]	3-3/8 "	R42R55200	R42R55199	R4066780	R4090021	-	-	-	-
R44141483[405]	3-3/8 "	R42R55200	R42R55199	R4066780	R4090021	-	-	-	-
R44140363[282]	1-1/16 "	R4133709	R4133709	N/A	NR	-	-	-	-
R44140388[280]	1-3/16 "	R4133708	R4133708	R4166872	NR	-	-	-	-
R44140388[280]	1-3/16 "	R4133708	R4133708	R4166872	NR	-	-	-	-
R44141130[32]	3-3/8 "	R42R55200	R42R55199[346]	R4066780	R4090021	-	-	-	-
R44140388[280]	1-3/16 "	R4133708	R4133708	R4166872	NR	-	-	-	-
R44140388[280]	1-3/16 "	R4133708	R4133708	R4166872	NR	-	-	-	-
R44141480[405]	3-3/8 "	R42R55200	R42R55199[346]	R4066780	R4090021	-	-	-	-
R44141480[405]	3-3/8 "	R42R55200	R42R55199[346]	R4066780	R4090021	-	-	-	-
R44141483[405]	3-3/8 "	R42R55200	R42R55199	R4066780	R4090021	-	-	-	-
R44141483[405]	3-3/8 "	R42R55200	R42R55199	R4066780	R4090021	-	-	-	-
R44140387	1-3/16 "	R4133708	R4133708	R4166872	NR	-	-	-	-
R44140387	1-3/16 "	R4133708	R4133708	R4166872	NR	-	-	-	-
R44141186[381]	3-5/32 "	R42R55382	R42R55381	R4066557	R4090068S	-	-	-	-
R44141186[381]	3-5/32 "	R42R55382	R42R55381	R4066557	R4090068S	-	-	-	-
R44141130[32]	3-3/8 "	R42R55200	R42R55199[346]	R4066780	R4090021	-	-	-	-
R44141130[32]	3-3/8 "	R42R55200	R42R55199[346]	R4066780	R4090021	-	-	-	-
R44141152[381]	3-3/8 "	R42R55200	R42R55199[346]	R4066780	R4090021	-	-	-	-
R44141152[381]	3-3/8 "	R42R55200	R42R55199[346]	R4066780	R4090021	-	-	-	-
R44141480[405]	3-3/8 "	R42R55200	R42R55199[346]	R4066780	R4090021	-	-	-	-
R44141480[405]	3-3/8 "	R42R55200	R42R55199[346]	R4066780	R4090021	-	-	-	-
R44141480[405]	3-3/8 "	R42R55200	R42R55199[346]	R4066780	R4090021	-	-	-	-
R44141483[405]	3-3/8 "	R42R55200	R42R55199	R4066780	R4090021	-	-	-	-
R44141483[405]	3-3/8 "	R42R55200	R42R55199	R4066780	R4090021	-	-	-	-
R44141186[381]	3-5/32 "	R42R55382	R42R55381	R4066557	R4090068S	-	-	-	-
R44141186[381]	3-5/32 "	R42R55382	R42R55381	R4066557	R4090068S	-	-	-	-
R44140363[282]	1-1/16 "	R4133709	R4133709	N/A	NR	-	-	-	-
R44140363[282]	1-1/16 "	R4133709	R4133709	N/A	NR	-	-	-	-
R44140388[280]	1-3/16 "	R4133708	R4133708	R4166872	NR	-	-	-	-
R44140388[280]	1-3/16 "	R4133708	R4133708	R4166872	NR	-	-	-	-
N/A	3-3/8 "	R42R55200	R42R55199[346]	R4066780	R4090021	-	-	-	-
R44141152[381]	3-3/8 "	R42R55200	R42R55199[346]	R4066780	R4090021	-	-	-	-
R44141152[381]	3-3/8 "	R42R55200	R42R55199[346]	R4066780	R4090021	-	-	-	-
R44141130[32]	3-3/8 "	R42R55200	R42R55199[346]	R4066780	R4090021	-	-	-	-
R44141480[405]	3-3/8 "	R42R55200	R42R55199[346]	R4066780	R4090021	-	-	-	-
R44141480[405]	3-3/8 "	R42R55200	R42R55199[346]	R4066780	R4090021	-	-	-	-
R44141480[405]	3-3/8 "	R42R55200	R42R55199[346]	R4066780	R4090021	-	-	-	-
R44141483[405]	3-3/8 "	R42R55200	R42R55199	R4066780	R4090021	-	-	-	-
R44141483[405]	3-3/8 "	R42R55200	R42R55199	R4066780	R4090021	-	-	-	-
R44141186[381]	3-5/32 "	R42R55382	R42R55381	R4066557	R4090068S	-	-	-	-
R44141186[381]	3-5/32 "	R42R55382	R42R55381	R4066557	R4090068S	-	-	-	-
R44140363[282]	1-1/16 "	R4133709	R4133709	N/A	NR	-	-	-	-
R44140363[282]	1-1/16 "	R4133709	R4133709	N/A	NR	-	-	-	-
R44140388[280]	1-3/16 "	R4133708	R4133708	R4166872	NR	-	-	-	-
R44140388[280]	1-3/16 "	R4133708	R4133708	R4166872	NR	-	-	-	-
R44141130[32]	3-3/8 "	R42R55200	R42R55199[346]	R4066780	R4090021	-	-	-	-
N/A	3-3/8 "	R42R55200	R42R55199[346]	R4066780	R4090021	-	-	-	-
R44141152[381]	3-3/8 "	R42R55200	R42R55199[346]	R4066780	R4090021	-	-	-	-
R44141152[381]	3-3/8 "	R42R55200	R42R55199[346]	R4066780	R4090021	-	-	-	-

MAKE MODEL YEAR AXLE CODE AXLE WEIGHT	AXLE & BRK. TYPE	BRK. MFG.	BRAKE SIZE	FMSI	MERITOR DISC PAD OR BRAKE SHOE	MERITOR GUIDE PIN OR RETURN SPRING KIT	MERITOR CALIPER HWD. KIT OR RETURN SPRING KIT	MERITOR ADJUSTER KIT (LEFT WHEEL)	MERITOR ADJUSTER KIT (RIGHT WHEEL)
GMC / CHEV(Cont.)									
P-30, P-3500 SERIES-1 TON FORWARD CONTROL AND MOTOR HOME CHASSIS(Cont.)									
1978									
	Fd	BX		7081 - D149	MD149	R40H5010	R40H5529	NR	NR
	Fd	BX		7081 - D149	MD149	R40H5010	R40H5529	NR	NR
	Fd	BX		7081 - D149	MD149	R40H5010	R40H5529	NR	NR
	Rd	BX		7081 - D149	MD149	R40H5010	R40H5529	NR	NR
Dual Rear Wheels	Rd	BX		7081 - D149	MD149	R40H5010	R40H5529	NR	NR
7,500, 8,200lb. GVW	Fd	GM		7084A - D153	MD392	R40H5004DP	R40H5500	NR	NR
	Fd	GM		7084A - D153	MD392	R40H5004DP	R40H5500	NR	NR
	Ra	GM	13 " x 2-1/2 "	2042AT - 451	R46451	R40H378	R40H7055	R40H2588	R40H2589
	Ra	GM	13 " x 2-1/2 "	2042AT - 451	R46451	R40H378	R40H7055	R40H2588	R40H2589
Dual Rear Wheels 10,000 lb. GVW	Fd	BX		7081 - D149	MD149	R40H5010	R40H5529	NR	NR
	Ra	GM	13 " x 3-1/2 "	2157T - 452	R46452	R40H378	R40H7055	R40H2588	R40H2589
	Ra	GM	13 " x 3-1/2 "	2157T - 452	R46452	R40H378	R40H7055	R40H2588	R40H2589
Single Rear Wheels 10,000 lb. GVW	Fd	BX		7081 - D149	MD149	R40H5010	R40H5529	NR	NR
	Fd	BX		7081 - D149	MD149	R40H5010	R40H5529	NR	NR
1977									
	Fd	BX		7081 - D149	MD149	R40H5010	R40H5529	NR	NR
	Fd	BX		7081 - D149	MD149	R40H5010	R40H5529	NR	NR
	Fd	BX		7081 - D149	MD149	R40H5010	R40H5529	NR	NR
	Rd	BX		7081 - D149	MD149	R40H5010	R40H5529	NR	NR
Dual Rear Wheels	Rd	BX		7081 - D149	MD149	R40H5010	R40H5529	NR	NR
7,500, 8,200lb. GVW	Fd	GM		7084A - D153	MD392	R40H5004DP	R40H5500	NR	NR
	Fd	GM		7084A - D153	MD392	R40H5004DP	R40H5500	NR	NR
	Ra	GM	13 " x 2-1/2 "	2042AT - 451	R46451	R40H378	R40H7055	R40H2588	R40H2589
	Ra	GM	13 " x 2-1/2 "	2042AT - 451	R46451	R40H378	R40H7055	R40H2588	R40H2589
Dual Rear Wheels 10,000 lb. GVW	Fd	BX		7081 - D149	MD149	R40H5010	R40H5529	NR	NR
	Ra	GM	13 " x 3-1/2 "	2157T - 452	R46452	R40H378	R40H7055	R40H2588	R40H2589
	Ra	GM	13 " x 3-1/2 "	2157T - 452	R46452	R40H378	R40H7055	R40H2588	R40H2589
Single Rear Wheels 10,000 lb. GVW	Fd	BX		7081 - D149	MD149	R40H5010	R40H5529	NR	NR
	Fd	BX		7081 - D149	MD149	R40H5010	R40H5529	NR	NR
1976									
	Fd	BX		7081 - D149	MD149	R40H5010	R40H5529	NR	NR
	Fd	BX		7081 - D149	MD149	R40H5010	R40H5529	NR	NR
	Fd	BX		7081 - D149	MD149	R40H5010	R40H5529	NR	NR
	Rd	BX		7081 - D149	MD149	R40H5010	R40H5529	NR	NR
Dual Rear Wheels	Rd	BX		7081 - D149	MD149	R40H5010	R40H5529	NR	NR
7,500, 8,200lb. GVW	Fd	GM		7084A - D153	MD392	R40H5004DP	R40H5500	NR	NR
	Fd	GM		7084A - D153	MD392	R40H5004DP	R40H5500	NR	NR
	Ra	GM	13 " x 2-1/2 "	2042AT - 451	R46451	R40H378	R40H7055	R40H2588	R40H2589
	Ra	GM	13 " x 2-1/2 "	2042AT - 451	R46451	R40H378	R40H7055	R40H2588	R40H2589
Dual Rear Wheels 10,000 lb. GVW	Fd	BX		7081 - D149	MD149	R40H5010	R40H5529	NR	NR
	Ra	GM	13 " x 3-1/2 "	2157T - 452	R46452	R40H378	R40H7055	R40H2588	R40H2589
	Ra	GM	13 " x 3-1/2 "	2157T - 452	R46452	R40H378	R40H7055	R40H2588	R40H2589
Single Rear Wheels 10,000 lb. GVW	Fd	BX		7081 - D149	MD149	R40H5010	R40H5529	NR	NR
	Fd	BX		7081 - D149	MD149	R40H5010	R40H5529	NR	NR
R-25, R-2500 SERIES-3/4 TIN CONVENTIONAL PICKUP AND SUBURBAN 2WD									
1991									
	Fd	GM		7280 - D392	MD392	R40H5004DP	R40H5500	NR	NR
	Fd	GM		7280 - D392	MD392	R40H5004DP	R40H5500	NR	NR
	Ra	GM	13 " x 2-1/2 "	2042AT - 451	R46451	R40H378	R40H7055	R40H2588	R40H2589
	Ra	GM	13 " x 2-1/2 "	2042AT - 451	R46451	R40H378	R40H7055	R40H2588	R40H2589
	Ra	GM	13 " x 2-1/2 "	2042AT - 451	R46451	R40H378	R40H7055	R40H2588	R40H2589
	Ra	GM	13 " x 2-1/2 "	2042AT - 451	R46451	R40H378	R40H7055	R40H2588	R40H2589
1990									
	Fd	GM		7280 - D392	MD392	R40H5004DP	R40H5500	NR	NR
	Fd	GM		7280 - D392	MD392	R40H5004DP	R40H5500	NR	NR
	Ra	GM	13 " x 2-1/2 "	2042AT - 451	R46451	R40H378	R40H7055	R40H2588	R40H2589

32 - For rotor only use R44141480

280 - 10 1/2" Ring Gear

282 - 10 1/2" Ring Gear, First Design; Use 3 3/8" Outside Diameter Axle Tubes

293 - With 9 1/2" Ring Gear and 6 3/8" Drum Width

346 - 4500 lb. Casting Number 2238451452, 10mm Inlet

381 - Rotor and Hub One Piece Assembly W/O ABS Ring

405 - Rotor Only

MERITOR DRUM OR ROTOR NO.	CALIPER OR CYLINDER BORE SIZE	MERITOR CALIPER OR WHEEL CYLINDER (LEFT)	MERITOR CALIPER OR WHEEL CYLINDER (RIGHT)	MERITOR CALIPER OR WHEEL CYLINDER REPAIR KIT	MERITOR CALIPER PISTON	MERITOR MASTER CYLINDER	MERITOR MASTER CYLINDER KIT	MERITOR BRAKE HOSE (LEFT)	MERITOR BRAKE HOSE (RIGHT)
									GMC / CHEV(Cont.)
P-30, P-3500 SERIES-1 TON FORWARD CONTROL AND MOTOR HOME CHASSIS(Cont.)									
R44141480[405]	3-3/8 "	R42R55200	R42R55199[346]	R4066780	R4090021	-	-	-	-
R44141480[405]	3-3/8 "	R42R55200	R42R55199[346]	R4066780	R4090021	-	-	-	-
R44141480[405]	3-3/8 "	R42R55200	R42R55199[346]	R4066780	R4090021	-	-	-	-
R44141483[405]	3-3/8 "	R42R55200	R42R55199	R4066780	R4090021	-	-	-	-
R44141483[405]	3-3/8 "	R42R55200	R42R55199	R4066780	R4090021	-	-	-	-
R44141186[381]	3-5/32 "	R42R55382	R42R55381	R4066557	R4090068S	-	-	-	-
R44141186[381]	3-5/32 "	R42R55382	R42R55381	R4066557	R4090068S	-	-	-	-
R44140363[282]	1-1/16 "	R4133709	R4133709	N/A	NR	-	-	-	-
R44140363[282]	1-1/16 "	R4133709	R4133709	N/A	NR	-	-	-	-
R44141130[32]	3-3/8 "	R42R55200	R42R55199[346]	R4066780	R4090021	-	-	-	-
R44140388[280]	1-3/16 "	R4133708	R4133708	R4166872	NR	-	-	-	-
R44140388[280]	1-3/16 "	R4133708	R4133708	R4166872	NR	-	-	-	-
N/A	3-3/8 "	R42R55200	R42R55199[346]	R4066780	R4090021	-	-	-	-
R44141130[32]	3-3/8 "	R42R55200	R42R55199[346]	R4066780	R4090021	-	-	-	-
R44141480[405]	3-3/8 "	R42R55200	R42R55199[346]	R4066780	R4090021	-	-	-	-
R44141480[405]	3-3/8 "	R42R55200	R42R55199[346]	R4066780	R4090021	-	-	-	-
R44141480[405]	3-3/8 "	R42R55200	R42R55199[346]	R4066780	R4090021	-	-	-	-
R44141483[405]	3-3/8 "	R42R55200	R42R55199	R4066780	R4090021	-	-	-	-
R44141483[405]	3-3/8 "	R42R55200	R42R55199	R4066780	R4090021	-	-	-	-
R44141186[381]	3-5/32 "	R42R55382	R42R55381	R4066557	R4090068S	-	-	-	-
R44141186[381]	3-5/32 "	R42R55382	R42R55381	R4066557	R4090068S	-	-	-	-
R44140363[282]	1-1/16 "	R4133709	R4133709	N/A	NR	-	-	-	-
R44140363[282]	1-1/16 "	R4133709	R4133709	N/A	NR	-	-	-	-
R44141130[32]	3-3/8 "	R42R55200	R42R55199[346]	R4066780	R4090021	-	-	-	-
R44140388[280]	1-3/16 "	R4133708	R4133708	R4166872	NR	-	-	-	-
R44140388[280]	1-3/16 "	R4133708	R4133708	R4166872	NR	-	-	-	-
R44141130[32]	3-3/8 "	R42R55200	R42R55199[346]	R4066780	R4090021	-	-	-	-
N/A	3-3/8 "	R42R55200	R42R55199[346]	R4066780	R4090021	-	-	-	-
R44141480[405]	3-3/8 "	R42R55200	R42R55199[346]	R4066780	R4090021	-	-	-	-
R44141480[405]	3-3/8 "	R42R55200	R42R55199[346]	R4066780	R4090021	-	-	-	-
R44141480[405]	3-3/8 "	R42R55200	R42R55199[346]	R4066780	R4090021	-	-	-	-
R44141483[405]	3-3/8 "	R42R55200	R42R55199	R4066780	R4090021	-	-	-	-
R44141483[405]	3-3/8 "	R42R55200	R42R55199	R4066780	R4090021	-	-	-	-
R44141186[381]	3-5/32 "	R42R55382	R42R55381	R4066557	R4090068S	-	-	-	-
R44141186[381]	3-5/32 "	R42R55382	R42R55381	R4066557	R4090068S	-	-	-	-
R44140363[282]	1-1/16 "	R4133709	R4133709	N/A	NR	-	-	-	-
R44140363[282]	1-1/16 "	R4133709	R4133709	N/A	NR	-	-	-	-
R44141130[32]	3-3/8 "	R42R55200	R42R55199[346]	R4066780	R4090021	-	-	-	-
R44140388[280]	1-3/16 "	R4133708	R4133708	R4166872	NR	-	-	-	-
R44140388[280]	1-3/16 "	R4133708	R4133708	R4166872	NR	-	-	-	-
N/A	3-3/8 "	R42R55200	R42R55199[346]	R4066780	R4090021	-	-	-	-
R44141130[32]	3-3/8 "	R42R55200	R42R55199[346]	R4066780	R4090021	-	-	-	-
R-25, R-2500 SERIES-3/4 TIN CONVENTIONAL PICKUP AND SUBURBAN 2WD									
R44141186[381]	3-5/32 "	R42R55382	R42R55381	R4066557	R4090068S	-	-	-	-
R44141186[381]	3-5/32 "	R42R55382	R42R55381	R4066557	R4090068S	-	-	-	-
R44140449[293]	1-1/16 "	R4133709	R4133709	N/A	NR	-	-	-	-
R44140363[282]	1-1/16 "	R4133709	R4133709	N/A	NR	-	-	-	-
R44140363[282]	1-1/16 "	R4133709	R4133709	N/A	NR	-	-	-	-
R44140449[293]	1-1/16 "	R4133709	R4133709	N/A	NR	-	-	-	-
R44141186[381]	3-5/32 "	R42R55382	R42R55381	R4066557	R4090068S	-	-	-	-
R44141186[381]	3-5/32 "	R42R55382	R42R55381	R4066557	R4090068S	-	-	-	-
R44140363[282]	1-1/16 "	R4133709	R4133709	N/A	NR	-	-	-	-

MAKE MODEL YEAR AXLE CODE AXLE WEIGHT	AXLE & BRK. TYPE	BRK. MFG.	BRAKE SIZE	FMSI	MERITOR DISC PAD OR BRAKE SHOE	MERITOR GUIDE PIN OR RETURN SPRING KIT	MERITOR CALIPER HWD. KIT OR RETURN SPRING KIT	MERITOR ADJUSTER KIT (LEFT WHEEL)	MERITOR ADJUSTER KIT (RIGHT WHEEL)
GMC / CHEV(Cont.)									
R-25, R-2500 SERIES-3/4 TIN CONVENTIONAL PICKUP AND SUBURBAN 2WD(Cont.)									
1990									
	Ra	GM	13 " x 2-1/2 "	2042AT - 451	R46451	R40H378	R40H7055	R40H2588	R40H2589
	Ra	GM	13 " x 2-1/2 "	2042AT - 451	R46451	R40H378	R40H7055	R40H2588	R40H2589
	Ra	GM	13 " x 2-1/2 "	2042AT - 451	R46451	R40H378	R40H7055	R40H2588	R40H2589
1989									
	Fd	GM		7280 - D392	MD392	R40H5004DP	R40H5500	NR	NR
	Fd	GM		7280 - D392	MD392	R40H5004DP	R40H5500	NR	NR
	Ra	GM	13 " x 2-1/2 "	2042AT - 451	R46451	R40H378	R40H7055	R40H2588	R40H2589
	Ra	GM	13 " x 2-1/2 "	2042AT - 451	R46451	R40H378	R40H7055	R40H2588	R40H2589
	Ra	GM	13 " x 2-1/2 "	2042AT - 451	R46451	R40H378	R40H7055	R40H2588	R40H2589
	Ra	GM	13 " x 2-1/2 "	2042AT - 451	R46451	R40H378	R40H7055	R40H2588	R40H2589
1988									
	Ra	GM	13 " x 2-1/2 "	2042AT - 451	R46451	R40H378	R40H7055	R40H2588	R40H2589
	Ra	GM	13 " x 2-1/2 "	2042AT - 451	R46451	R40H378	R40H7055	R40H2588	R40H2589
	Ra	GM	13 " x 2-1/2 "	2042AT - 451	R46451	R40H378	R40H7055	R40H2588	R40H2589
	Ra	GM	13 " x 2-1/2 "	2042AT - 451	R46451	R40H378	R40H7055	R40H2588	R40H2589
7,200 lb. GVW	Fd	GM		728A - D52	MD52	R40H5004DP	R40H5500	NR	NR
	Fd	GM		728A - D52	MD52	R40H5004DP	R40H5500	NR	NR
8,400 lb. GVW	Fd	GM		7084A - D153	MD392	R40H5004DP	R40H5500	NR	NR
	Fd	GM		7084A - D153	MD392	R40H5004DP	R40H5500	NR	NR
1987									
	Ra	GM	11.1563 x 2-3/4 "	2073TT - 473	R46473	R40H369	R40H4072DP[278]	R40H2586	R40H2587
	Ra	GM	11.1563 x 2-3/4 "	2073TT - 473	R46473	R40H369	R40H4072DP[278]	R40H2586	R40H2587
	Ra	GM	13 " x 2-1/2 "	2042AT - 451	R46451	R40H378	R40H7055	R40H2588	R40H2589
	Ra	GM	13 " x 2-1/2 "	2042AT - 451	R46451	R40H378	R40H7055	R40H2588	R40H2589
	Ra	GM	13 " x 2-1/2 "	2042AT - 451	R46451	R40H378	R40H7055	R40H2588	R40H2589
	Ra	GM	13 " x 2-1/2 "	2042AT - 451	R46451	R40H378	R40H7055	R40H2588	R40H2589
7,200 lb. GVW	Fd	GM		728A - D52	MD52	R40H5004DP	R40H5500	NR	NR
	Fd	GM		728A - D52	MD52	R40H5004DP	R40H5500	NR	NR
8,400 lb. GVW	Fd	GM		7084A - D153	MD392	R40H5004DP	R40H5500	NR	NR
	Fd	GM		7084A - D153	MD392	R40H5004DP	R40H5500	NR	NR
R-30, R-3500 SERIES-1 TON CONVENTIONAL PICKUP AND SUBURBAN 2WD									
1991									
Dual Rear Wheels	Fd	BX		7081 - D149	MD149	R40H5010	R40H5529	NR	NR
	Fd	BX		7081 - D149	MD149	R40H5010	R40H5529	NR	NR
	Ra	GM	13 " x 3-1/2 "	2157T - 452	R46452	R40H378	R40H7055	R40H2588	R40H2589
	Ra	GM	13 " x 3-1/2 "	2157T - 452	R46452	R40H378	R40H7055	R40H2588	R40H2589
Single Rear Wheels	Fd	BX		7081 - D149	MD149	R40H5010	R40H5529	NR	NR
	Fd	BX		7081 - D149	MD149	R40H5010	R40H5529	NR	NR
	Ra	GM	13 " x 3-1/2 "	2157T - 452	R46452	R40H378	R40H7055	R40H2588	R40H2589
	Ra	GM	13 " x 3-1/2 "	2157T - 452	R46452	R40H378	R40H7055	R40H2588	R40H2589
1990									
Dual Rear Wheels	Fd	BX		7081 - D149	MD149	R40H5010	R40H5529	NR	NR
	Fd	BX		7081 - D149	MD149	R40H5010	R40H5529	NR	NR
	Ra	GM	13 " x 3-1/2 "	2157T - 452	R46452	R40H378	R40H7055	R40H2588	R40H2589
	Ra	GM	13 " x 3-1/2 "	2157T - 452	R46452	R40H378	R40H7055	R40H2588	R40H2589
Single Rear Wheels	Fd	BX		7081 - D149	MD149	R40H5010	R40H5529	NR	NR
	Fd	BX		7081 - D149	MD149	R40H5010	R40H5529	NR	NR
	Ra	GM	13 " x 3-1/2 "	2157T - 452	R46452	R40H378	R40H7055	R40H2588	R40H2589
	Ra	GM	13 " x 3-1/2 "	2157T - 452	R46452	R40H378	R40H7055	R40H2588	R40H2589
1989									
	Ra	GM	13 " x 2-1/2 "	2042AT - 451	R46451	R40H378	R40H7055	R40H2588	R40H2589
	Ra	GM	13 " x 2-1/2 "	2042AT - 451	R46451	R40H378	R40H7055	R40H2588	R40H2589
Dual Rear Wheels	Fd	BX		7081 - D149	MD149	R40H5010	R40H5529	NR	NR
	Fd	BX		7081 - D149	MD149	R40H5010	R40H5529	NR	NR
	Ra	GM	13 " x 3-1/2 "	2157T - 452	R46452	R40H378	R40H7055	R40H2588	R40H2589
	Ra	GM	13 " x 3-1/2 "	2157T - 452	R46452	R40H378	R40H7055	R40H2588	R40H2589
Single Rear Wheels	Fd	BX		7081 - D149	MD149	R40H5010	R40H5529	NR	NR
	Fd	BX		7081 - D149	MD149	R40H5010	R40H5529	NR	NR
	Ra	GM	13 " x 3-1/2 "	2157T - 452	R46452	R40H378	R40H7055	R40H2588	R40H2589
	Ra	GM	13 " x 3-1/2 "	2157T - 452	R46452	R40H378	R40H7055	R40H2588	R40H2589
1988									
	Ra	GM	13 " x 2-1/2 "	2042AT - 451	R46451	R40H378	R40H7055	R40H2588	R40H2589
	Ra	GM	13 " x 2-1/2 "	2042AT - 451	R46451	R40H378	R40H7055	R40H2588	R40H2589

32 - For rotor only use R44141480
278 - For Heavy Duty version use E-11287
280 - 10 1/2" Ring Gear
282 - 10 1/2" Ring Gear, First Design; Use 3 3/8" Outside Diameter Axle Tubes
293 - With 9 1/2" Ring Gear and 6 3/8" Drum Width
346 - 4500 lb. Casting Number 2238451452, 10mm Inlet
381 - Rotor and Hub One Piece Assembly W/O ABS Ring

MERITOR DRUM OR ROTOR NO.	CALIPER OR CYLINDER BORE SIZE	MERITOR CALIPER OR WHEEL CYLINDER (LEFT)	MERITOR CALIPER OR WHEEL CYLINDER (RIGHT)	MERITOR CALIPER OR WHEEL CYLINDER REPAIR KIT	MERITOR CALIPER PISTON	MERITOR MASTER CYLINDER	MERITOR MASTER CYLINDER KIT	MERITOR BRAKE HOSE (LEFT)	MERITOR BRAKE HOSE (RIGHT)
									GMC / CHEV(Cont.)
R-25, R-2500 SERIES-3/4 TIN CONVENTIONAL PICKUP AND SUBURBAN 2WD(Cont.)									
R44140363[282]	1-1/16 "	R4133709	R4133709	N/A	NR	-	-	-	-
R44140449[293]	1-1/16 "	R4133709	R4133709	N/A	NR	-	-	-	-
R44140449[293]	1-1/16 "	R4133709	R4133709	N/A	NR	-	-	-	-
R44141186[381]	3-5/32 "	R42R55382	R42R55381	R4066557	R4090068S	-	-	-	-
R44141186[381]	3-5/32 "	R42R55382	R42R55381	R4066557	R4090068S	-	-	-	-
R44140363[282]	1-1/16 "	R4133709	R4133709	N/A	NR	-	-	-	-
R44140449[293]	1-1/16 "	R4133709	R4133709	N/A	NR	-	-	-	-
R44140363[282]	1-1/16 "	R4133709	R4133709	N/A	NR	-	-	-	-
R44140449[293]	1-1/16 "	R4133709	R4133709	N/A	NR	-	-	-	-
R44140449[293]	1-1/16 "	R4133709	R4133709	N/A	NR	-	-	-	-
R44140363[282]	1-1/16 "	R4133709	R4133709	N/A	NR	-	-	-	-
R44140363[282]	1-1/16 "	R4133709	R4133709	N/A	NR	-	-	-	-
R44140449[293]	1-1/16 "	R4133709	R4133709	N/A	NR	-	-	-	-
R44141186[381]	2-15/16 "	R42R55208	R42R55207	R4066848	R4090013S	-	-	-	-
R44141186[381]	2-15/16 "	R42R55208	R42R55207	R4066848	R4090013S	-	-	-	-
R44141186[381]	3-5/32 "	R42R55382	R42R55381	R4066557	R4090068S	-	-	-	-
R44141186[381]	3-5/32 "	R42R55382	R42R55381	R4066557	R4090068S	-	-	-	-
R44140450	1 "	R4133608	R4133608	R4166620	NR	-	-	-	-
R44140450	1 "	R4133608	R4133608	R4166620	NR	-	-	-	-
R44140363[282]	1-1/16 "	R4133709	R4133709	N/A	NR	-	-	-	-
R44140449[293]	1-1/16 "	R4133709	R4133709	N/A	NR	-	-	-	-
R44140449[293]	1-1/16 "	R4133709	R4133709	N/A	NR	-	-	-	-
R44140363[282]	1-1/16 "	R4133709	R4133709	N/A	NR	-	-	-	-
R44141186[381]	2-15/16 "	R42R55208	R42R55207	R4066848	R4090013S	-	-	-	-
R44141186[381]	2-15/16 "	R42R55208	R42R55207	R4066848	R4090013S	-	-	-	-
R44141186[381]	3-5/32 "	R42R55382	R42R55381	R4066557	R4090068S	-	-	-	-
R44141186[381]	3-5/32 "	R42R55382	R42R55381	R4066557	R4090068S	-	-	-	-
R-30, R-3500 SERIES-1 TON CONVENTIONAL PICKUP AND SUBURBAN 2WD									
R44141130[32]	3-3/8 "	R42R55200	R42R55199[346]	R4066780	R4090021	-	-	-	-
R44141130[32]	3-3/8 "	R42R55200	R42R55199[346]	R4066780	R4090021	-	-	-	-
R44140388[280]	1-3/16 "	R4133708	R4133708	R4166872	NR	-	-	-	-
R44140388[280]	1-3/16 "	R4133708	R4133708	R4166872	NR	-	-	-	-
R44141152[381]	3-3/8 "	R42R55200	R42R55199[346]	R4066780	R4090021	-	-	-	-
R44141152[381]	3-3/8 "	R42R55200	R42R55199[346]	R4066780	R4090021	-	-	-	-
R44140387	1-1/16 "	R4133709	R4133709	N/A	NR	-	-	-	-
R44140387	1-1/16 "	R4133709	R4133709	N/A	NR	-	-	-	-
R44141130[32]	3-3/8 "	R42R55200	R42R55199[346]	R4066780	R4090021	-	-	-	-
R44141130[32]	3-3/8 "	R42R55200	R42R55199[346]	R4066780	R4090021	-	-	-	-
R44140388[280]	1-3/16 "	R4133708	R4133708	R4166872	NR	-	-	-	-
R44140388[280]	1-3/16 "	R4133708	R4133708	R4166872	NR	-	-	-	-
R44141152[381]	3-3/8 "	R42R55200	R42R55199[346]	R4066780	R4090021	-	-	-	-
R44141152[381]	3-3/8 "	R42R55200	R42R55199[346]	R4066780	R4090021	-	-	-	-
R44140387	1-1/16 "	R4133709	R4133709	N/A	NR	-	-	-	-
R44140387	1-1/16 "	R4133709	R4133709	N/A	NR	-	-	-	-
R44140363[282]		-	-	N/A	NR	-	-	-	-
R44140363[282]	1-1/16 "	R4133709	R4133709	N/A	NR	-	-	-	-
R44141130[32]	3-3/8 "	R42R55200	R42R55199[346]	R4066780	R4090021	-	-	-	-
R44141130[32]	3-3/8 "	R42R55200	R42R55199[346]	R4066780	R4090021	-	-	-	-
R44140388[280]	1-3/16 "	R4133708	R4133708	R4166872	NR	-	-	-	-
R44140388[280]	1-3/16 "	R4133708	R4133708	R4166872	NR	-	-	-	-
R44141152[381]	3-3/8 "	R42R55200	R42R55199[346]	R4066780	R4090021	-	-	-	-
R44141152[381]	3-3/8 "	R42R55200	R42R55199[346]	R4066780	R4090021	-	-	-	-
R44140387	1-1/16 "	R4133709	R4133709	N/A	NR	-	-	-	-
R44140387	1-1/16 "	R4133709	R4133709	N/A	NR	-	-	-	-
R44140363[282]		-	-	N/A	NR	-	-	-	-
R44140363[282]	1-1/16 "	R4133709	R4133709	N/A	NR	-	-	-	-

MAKE MODEL YEAR AXLE CODE AXLE WEIGHT	AXLE & BRK. TYPE	BRK. MFG.	BRAKE SIZE	FMSI	MERITOR DISC PAD OR BRAKE SHOE	MERITOR GUIDE PIN OR RETURN SPRING KIT	MERITOR CALIPER HWD. KIT OR RETURN SPRING KIT	MERITOR ADJUSTER KIT (LEFT WHEEL)	MERITOR ADJUSTER KIT (RIGHT WHEEL)
GMC / CHEV(Cont.)									
R-30, R-3500 SERIES-1 TON CONVENTIONAL PICKUP AND SUBURBAN 2WD(Cont.)									
1988									
Dual Rear Wheels	Fd	BX		7081 - D149	MD149	R40H5010	R40H5529	NR	NR
	Fd	BX		7081 - D149	MD149	R40H5010	R40H5529	NR	NR
	Ra	GM	13 " x 3-1/2 "	2157T - 452	R46452	R40H378	R40H7055	R40H2588	R40H2589
	Ra	GM	13 " x 3-1/2 "	2157T - 452	R46452	R40H378	R40H7055	R40H2588	R40H2589
Single Rear Wheels	Fd	BX		7081 - D149	MD149	R40H5010	R40H5529	NR	NR
	Fd	BX		7081 - D149	MD149	R40H5010	R40H5529	NR	NR
	Ra	GM	13 " x 3-1/2 "	2157T - 452	R46452	R40H378	R40H7055	R40H2588	R40H2589
	Ra	GM	13 " x 3-1/2 "	2157T - 452	R46452	R40H378	R40H7055	R40H2588	R40H2589
1987									
	Ra	GM	13 " x 2-1/2 "	2042AT - 451	R46451	R40H378	R40H7055	R40H2588	R40H2589
	Ra	GM	13 " x 2-1/2 "	2042AT - 451	R46451	R40H378	R40H7055	R40H2588	R40H2589
Dual Rear Wheels	Fd	BX		7081 - D149	MD149	R40H5010	R40H5529	NR	NR
	Fd	BX		7081 - D149	MD149	R40H5010	R40H5529	NR	NR
	Ra	GM	13 " x 3-1/2 "	2157T - 452	R46452	R40H378	R40H7055	R40H2588	R40H2589
	Ra	GM	13 " x 3-1/2 "	2157T - 452	R46452	R40H378	R40H7055	R40H2588	R40H2589
Single Rear Wheels	Fd	BX		7081 - D149	MD149	R40H5010	R40H5529	NR	NR
	Fd	BX		7081 - D149	MD149	R40H5010	R40H5529	NR	NR
	Ra	GM	13 " x 3-1/2 "	2157T - 452	R46452	R40H378	R40H7055	R40H2588	R40H2589
	Ra	GM	13 " x 3-1/2 "	2157T - 452	R46452	R40H378	R40H7055	R40H2588	R40H2589
V-20, V-2500 SERIES-3/4 TON CONVENTIONAL PICKUP AND SUBURBAN 4WD									
1991									
	Fd	GM		7280 - D392	MD392	R40H5004DP	R40H5500	NR	NR
	Fd	GM		7280 - D392	MD392	R40H5004DP	R40H5500	NR	NR
	Ra	GM	13 " x 2-1/2 "	2042AT - 451	R46451	R40H378	R40H7055	R40H2588	R40H2589
	Ra	GM	13 " x 2-1/2 "	2042AT - 451	R46451	R40H378	R40H7055	R40H2588	R40H2589
Suburban Except 13 Brakes, Except Diesel Engine	Fd	GM		7280 - D392	MD392	R40H5004DP	R40H5500	NR	NR
1990									
	Fd	GM		7280 - D392	MD392	R40H5004DP	R40H5500	NR	NR
	Fd	GM		7280 - D392	MD392	R40H5004DP	R40H5500	NR	NR
	Fd	GM		7280 - D392	MD392	R40H5004DP	R40H5500	NR	NR
	Ra	GM	13 " x 2-1/2 "	2042AT - 451	R46451	R40H378	R40H7055	R40H2588	R40H2589
	Ra	GM	13 " x 2-1/2 "	2042AT - 451	R46451	R40H378	R40H7055	R40H2588	R40H2589
1989									
	Fd	GM		7280 - D392	MD392	R40H5004DP	R40H5500	NR	NR
	Fd	GM		7280 - D392	MD392	R40H5004DP	R40H5500	NR	NR
	Fd	GM		7280 - D392	MD392	R40H5004DP	R40H5500	NR	NR
	Ra	GM	13 " x 2-1/2 "	2042AT - 451	R46451	R40H378	R40H7055	R40H2588	R40H2589
	Ra	GM	13 " x 2-1/2 "	2042AT - 451	R46451	R40H378	R40H7055	R40H2588	R40H2589
1988									
	Ra	GM	11.1563 x 2-3/4 "	2073TT - 473	R46473	R40H369	R40H4072DP[278]	R40H2586	R40H2587
	Ra	GM	13 " x 2-1/2 "	2042AT - 451	R46451	R40H378	R40H7055	R40H2588	R40H2589
6,600lb. GVW	Fd	GM		728A - D52	MD52	R40H5004DP	R40H5500	NR	NR
8,600 lb. GVW	Fd	GM		7084A - D153	MD392	R40H5004DP	R40H5500	NR	NR
1987									
	Ra	GM	13 " x 2-1/2 "	2042AT - 451	R46451	R40H378	R40H7055	R40H2588	R40H2589
1987 Option	Ra	GM	11.1563 x 2-3/4 "	2073TT - 473	R46473	R40H369	R40H4072DP[278]	R40H2586	R40H2587
6,600lb. GVW	Fd	GM		728A - D52	MD52	R40H5004DP	R40H5500	NR	NR
8,600 lb. GVW	Fd	GM		7084A - D153	MD392	R40H5004DP	R40H5500	NR	NR
V-30, V-3500 SERIES-1 TON PICKUP AND SUBURBAN 4WD									
1991									
	Fd	GM		7339 - D459	MD459	R40H5083	R40H5788	NR	NR
	Fd	GM		7260 - D370	MD370	R40H5083	R40H5707	NR	NR
	Fd	GM		7339 - D459	MD459	R40H5083	R40H5788	NR	NR
	Ra	GM	13 " x 2-1/2 "	2042AT - 451	R46451	R40H378	R40H7055	R40H2588	R40H2589
	Ra	GM	13 " x 2-1/2 "	2042AT - 451	R46451	R40H378	R40H7055	R40H2588	R40H2589
	Ra	GM	13 " x 3-1/2 "	2157T - 452	R46452	R40H378	R40H7055	R40H2588	R40H2589
	Ra	GM	13 " x 3-1/2 "	2157T - 452	R46452	R40H378	R40H7055	R40H2588	R40H2589
	Ra	GM	13 " x 3-1/2 "	2157T - 452	R46452	R40H378	R40H7055	R40H2588	R40H2589
	Ra	GM	13 " x 3-1/2 "	2157T - 452	R46452	R40H378	R40H7055	R40H2588	R40H2589
	Ra	GM	13 " x 3-1/2 "	2157T - 452	R46452	R40H378	R40H7055	R40H2588	R40H2589
	Ra	GM	13 " x 3-1/2 "	2157T - 452	R46452	R40H378	R40H7055	R40H2588	R40H2589

32 - For rotor only use R44141480
64 - 131.5", 155.5" Wheel Base
280 - 10 1/2" Ring Gear
35 – R44141049 is rotor only, for hub only use E-8394
65 - 135.5", 159.5" Wheel Base
282 - 10 1/2" Ring Gear, First Design; Use 3 3/8" Outside Diameter Axle Tubes
53 - Power Brakes
278 - For Heavy Duty version use E-11287
293 - With 9 1/2" Ring Gear and 6 3/8" Drum Width

MERITOR DRUM OR ROTOR NO.	CALIPER OR CYLINDER BORE SIZE	MERITOR CALIPER OR WHEEL CYLINDER (LEFT)	MERITOR CALIPER OR WHEEL CYLINDER (RIGHT)	MERITOR CALIPER OR WHEEL CYLINDER REPAIR KIT	MERITOR CALIPER PISTON	MERITOR MASTER CYLINDER	MERITOR MASTER CYLINDER KIT	MERITOR BRAKE HOSE (LEFT)	MERITOR BRAKE HOSE (RIGHT)
									GMC / CHEV(Cont.)
R-30, R-3500 SERIES-1 TON CONVENTIONAL PICKUP AND SUBURBAN 2WD(Cont.)									
R44141130[32]	3-3/8 "	R42R55200	R42R55199[346]	R4066780	R4090021	-	-	-	-
R44141130[32]	3-3/8 "	R42R55200	R42R55199[346]	R4066780	R4090021	-	-	-	-
R44140388[280]	1-3/16 "	R4133708	R4133708	R4166872	NR	-	-	-	-
R44140388[280]	1-3/16 "	R4133708	R4133708	R4166872	NR	-	-	-	-
R44141152[381]	3-3/8 "	R42R55200	R42R55199[346]	R4066780	R4090021	-	-	-	-
R44141152[381]	3-3/8 "	R42R55200	R42R55199[346]	R4066780	R4090021	-	-	-	-
R44140387	1-1/16 "	R4133709	R4133709	N/A	NR	-	-	-	-
R44140387	1-1/16 "	R4133709	R4133709	N/A	NR	-	-	-	-
R44140363[282]	1-1/16 "	R4133709	R4133709	N/A	NR	-	-	-	-
R44140363[282]		-	-	N/A	NR	-	-	-	-
R44141130[32]	3-3/8 "	R42R55200	R42R55199[346]	R4066780	R4090021	-	-	-	-
R44141130[32]	3-3/8 "	R42R55200	R42R55199[346]	R4066780	R4090021	-	-	-	-
R44140388[280]	1-3/16 "	R4133708	R4133708	R4166872	NR	-	-	-	-
R44140388[280]	1-3/16 "	R4133708	R4133708	R4166872	NR	-	-	-	-
R44141152[381]	3-3/8 "	R42R55200	R42R55199[346]	R4066780	R4090021	-	-	-	-
R44141152[381]	3-3/8 "	R42R55200	R42R55199[346]	R4066780	R4090021	-	-	-	-
R44140387	1-1/16 "	R4133709	R4133709	N/A	NR	-	-	-	-
R44140387	1-1/16 "	R4133709	R4133709	N/A	NR	-	-	-	-
V-20, V-2500 SERIES-3/4 TON CONVENTIONAL PICKUP AND SUBURBAN 4WD									
N/A	3-5/32 "	R42R55382	R42R55381	R4066557	R4090068S	-	-	-	-
R44141049[35]	3-5/32 "	R42R55382	R42R55381	R4066557	R4090068S	-	-	-	-
R44140449[293]	1-1/16 "	R4133709	R4133709	N/A	NR	-	-	-	-
R44140449[293]	1-1/16 "	R4133709	R4133709	N/A	NR	-	-	-	-
R44141049[35]	3-5/32 "	R42R55382	R42R55381	R4066557	R4090068S	-	-	-	-
R44141049[35]	3-5/32 "	R42R55382	R42R55381	R4066557	R4090068S	-	-	-	-
N/A	3-5/32 "	R42R55382	R42R55381	R4066557	R4090068S	-	-	-	-
R44141049[35]	3-5/32 "	R42R55382	R42R55381	R4066557	R4090068S	-	-	-	-
R44140449[293]	1-1/16 "	R4133709	R4133709	N/A	NR	-	-	-	-
R44140449[293]	1-1/16 "	R4133709	R4133709	N/A	NR	-	-	-	-
R44141049[35]	3-5/32 "	R42R55382	R42R55381	R4066557	R4090068S	-	-	-	-
R44141049[35]	3-5/32 "	R42R55382	R42R55381	R4066557	R4090068S	-	-	-	-
N/A	3-5/32 "	R42R55382	R42R55381	R4066557	R4090068S	-	-	-	-
R44140449[293]	1-1/16 "	R4133709	R4133709	N/A	NR	-	-	-	-
R44140449[293]	1-1/16 "	R4133709	R4133709	N/A	NR	-	-	-	-
R44140450	1 "	R4133608	R4133608	R4166620	NR	-	-	-	-
R44140449[293]	1-1/16 "	R4133709	R4133709	N/A	NR	-	-	-	-
R44141049[35]	2-15/16 "	R42R55206	R42R55205	R4066848	R4090013S	-	-	-	-
R44141049[35]	3-5/32 "	R42R55382	R42R55381	R4066557	R4090068S	-	-	-	-
R44140449[293]	1-1/16 "	R4133709	R4133709	N/A	NR	-	-	-	-
R44140450	1 "	R4133608	R4133608	R4166620	NR	-	-	-	-
R44141049[35]	2-15/16 "	R42R55206	R42R55205	R4066848	R4090013S	-	-	-	-
R44141049[35]	3-5/32 "	R42R55382	R42R55381	R4066557	R4090068S	-	-	-	-
V-30, V-3500 SERIES-1 TON PICKUP AND SUBURBAN 4WD									
R44141770[405]	3-25/32 "	R42R55687	R42R55688	R4066211	R4090188S	R4113022[53]	R4122437	R4578224	R4578787
R44141477[405]	3-5/32 "	R42R55497	R42R55496	R4066330	R4090101S	R4113022[53]	R4122437	R4578224	R4578787
R44141770[405]	3-25/32 "	R42R55687	R42R55688	R4066211	R4090188S	R4113022[53]	R4122437	R451534[64]	R4577461
R44140363[282]	1-1/16 "	R4133709	R4133709	N/A	NR	-	-	R4577765	R4577765
R44140363[282]	1-1/16 "	R4133709	R4133709	N/A	NR	-	-	R4577765	R4577765
R44140388[280]	1-3/16 "	R4133708	R4133708	R4166872	NR	-	-	R4578360[65]	R4578360
R44140387	1-3/16 "	R4133708	R4133708	R4166872	NR	-	-	R4578360[65]	R4578360
R44140619	1-3/16 "	R4133708	R4133708	R4166872	NR	-	-	R4578360[65]	R4578360
R44140388[280]	1-3/16 "	R4133708	R4133708	R4166872	NR	-	-	R4578360[65]	R4578360
R44140619	1-3/16 "	R4133708	R4133708	R4166872	NR	-	-	R4578360[65]	R4578360
R44140387	1-3/16 "	R4133708	R4133708	R4166872	NR	-	-	R4578360[65]	R4578360

346 - 4500 lb. Casting Number 2238451452, 10mm Inlet

381 - Rotor and Hub One Piece Assembly W/O ABS Ring

405 - Rotor Only

MAKE MODEL YEAR AXLE CODE AXLE WEIGHT	AXLE & BRK. TYPE	BRK. MFG.	BRAKE SIZE	FMSI	MERITOR DISC PAD OR BRAKE SHOE	MERITOR GUIDE PIN OR RETURN SPRING KIT	MERITOR CALIPER HWD. KIT OR RETURN SPRING KIT	MERITOR ADJUSTER KIT (LEFT WHEEL)	MERITOR ADJUSTER KIT (RIGHT WHEEL)
GMC / CHEV(Cont.)									
V-30, V-3500 SERIES-1 TON PICKUP AND SUBURBAN 4WD(Cont.)									
1989									
	Fd	GM		7260 - D370	MD370	R40H5083	R40H5707	NR	NR
	Ra	GM	13 " x 2-1/2 "	2042AT - 451	R46451	R40H378	R40H7055	R40H2588	R40H2589
	Ra	GM	13 " x 2-1/2 "	2042AT - 451	R46451	R40H378	R40H7055	R40H2588	R40H2589
	Ra	GM	13 " x 3-1/2 "	2157T - 452	R46452	R40H378	R40H7055	R40H2588	R40H2589
1988									
	Fd	GM		7260 - D370	MD370	R40H5083	R40H5707	NR	NR
	Ra	GM	13 " x 2-1/2 "	2042AT - 451	R46451	R40H378	R40H7055	R40H2588	R40H2589
	Ra	GM	13 " x 3-1/2 "	2157T - 452	R46452	R40H378	R40H7055	R40H2588	R40H2589
1987									
	Fd	GM		7260 - D370	MD370	R40H5083	R40H5707	NR	NR
	Ra	GM	13 " x 2-1/2 "	2042AT - 451	R46451	R40H378	R40H7055	R40H2588	R40H2589
	Ra	GM	13 " x 3-1/2 "	2157T - 452	R46452	R40H378	R40H7055	R40H2588	R40H2589
W 4									
2005 Diesel Engine 1-04 through 10,001 - 14,000 lbs GVWR Class 3 Vehicle	Fd	Isuzu		7699 - D827	MD827[368]	R4112503	-	N/A	N/A
Gasoline Engine 14,001 - 16,000 lbs GVWR Class 4 Vehicle	Fd	Isuzu		7699 - D827	MD827[369]	-	-	N/A	N/A
2004 Diesel Engine 1-04 through 10,001 - 14,000 lbs GVWR Class 3 Vehicle	Fd	Isuzu		7699 - D827	MD827[368]	R4112503	-	N/A	N/A
Gasoline Engine 7-03 through 6-04 14,001 - 16,000 lbs GVWR Class 4 Vehicle	Fd	Isuzu		7699 - D827	MD827[369]	R4112504	-	N/A	N/A
Gasoline Engine 7-04 Through 14,001 - 16,000 lbs GVWR Class 4 Vehicle	Fd	Isuzu		7699 - D827	MD827[369]	R4112503	-	N/A	N/A
2003 Diesel Engine 1-03 through 11-03 10,001 - 14,000 lbs GVWR Class 3 Vehicle	Fd	Isuzu		7697 - D825	MD825[368]	R4112503	-	N/A	N/A
Diesel Engine 11-03 through 12-03 10,001 - 14,000 lbs GVWR Class 3 Vehicle	Fd	Isuzu		7697 - D825	MD825[368]	-	-	N/A	N/A
Gasoline Engine 7-03 through 6-04 14,001 - 16,000 lbs GVWR Class 4 Vehicle	Fd	Isuzu		7699 - D827	MD827[369]	R4112504	-	N/A	N/A
Gasoline Engine 8-99 through 6-03 14,001 - 16,000 lbs GVWR Class 4 Vehicle	Fd	Isuzu		7699 - D827	MD827[369]	R4112504	-	N/A	N/A
2002 Diesel Engine 10,001 - 14,000 lbs GVWR Class 3 Vehicle	Fd	Isuzu		7697 - D825	MD825[368]	R4112503	-	N/A	N/A
Gasoline Engine 14,001 - 16,000 lbs GVWR Class 4 Vehicle	Fd	Isuzu		7699 - D827	MD827[369]	R4112504	-	N/A	N/A
2001 Diesel Engine 1-01 through 1-03 10,001 - 14,000 lbs GVWR Class 3 Vehicle	Fd	Isuzu		7697 - D825	MD825[369]	R4112503	-	N/A	N/A
Gasoline Engine 14,001 - 16,000 lbs GVWR Class 4 Vehicle	Fd	Isuzu		7699 - D827	MD827[369]	R4112504	-	N/A	N/A

280 - 10 1/2" Ring Gear
368 - Isuzu # includes all clips
293 - With 9 1/2" Ring Gear and 6 3/8" Drum Width
369 - Includes all clips
309 - Power Brakes, Hydroboost
405 - Rotor Only

MERITOR DRUM OR ROTOR NO.	CALIPER OR CYLINDER BORE SIZE	MERITOR CALIPER OR WHEEL CYLINDER (LEFT)	MERITOR CALIPER OR WHEEL CYLINDER (RIGHT)	MERITOR CALIPER OR WHEEL CYLINDER REPAIR KIT	MERITOR CALIPER PISTON	MERITOR MASTER CYLINDER	MERITOR MASTER CYLINDER KIT	MERITOR BRAKE HOSE (LEFT)	MERITOR BRAKE HOSE (RIGHT)
									GMC / CHEV(Cont.)
									V-30, V-3500 SERIES-1 TON PICKUP AND SUBURBAN 4WD(Cont.)
R44141477[405]	3-5/32 "	R42R55497	R42R55496	R4066330	R4090101S	R4112220[309]	R4122141	R4578224	R4578787
R44140449[293]	1-1/16 "	R4133709	R4133709	N/A	NR	-	-	R4577765	R4577765
R44140536[280]	1-1/16 "	R4133709	R4133709	N/A	NR	-	-	R4577765	R4577765
R44140388[280]	1-3/16 "	R4133708	R4133708	R4166872	NR	-	-	R4577765	R4577765
R44141477[405]	3-5/32 "	R42R55497	R42R55496	R4066330	R4090101S	R4112220[309]	R4122141	R4578224	R4578787
R44140536[280]	1-1/16 "	R4133709	R4133709	N/A	NR	-	-	R4577765	R4577765
R44140388[280]	1-3/16 "	R4133708	R4133708	R4166872	NR	-	-	R4577765	R4577765
R44141477[405]	3-5/32 "	R42R55497	R42R55496	R4066330	R4090101S	R4112220[309]	R4122141	R4578224	R4578787
R44140536[280]	1-1/16 "	R4133709	R4133709	N/A	NR	-	-	R4577765	R4577765
R44140388[280]	1-3/16 "	R4133708	R4133708	R4166872	NR	-	-	R4577765	R4577765
									W 4
-	54mm	R4212269	R4212270	R4012285	R4012281	-	-	-	-
R4421493R		R4212273	R4212274	R4012284	R4012280	-	-	-	-
-		R4212269	R4212270	R4012285	R4012281	-	-	-	-
R4421493R		R4212275	R4212276	R4012283	R4012279	-	-	-	-
R4421493R		R4212273	R4212274	R4012284	R4012280	-	-	-	-
-		R4212271X	R4212272X	R4012286	R4012282	-	-	-	-
-		R4212271X	R4212272X	R4012286	R4012282	-	-	-	-
R4421493R		R4212275	R4212276	R4012283	R4012279	-	-	-	-
-		R4212275	R4212276	R4012283	R4012279	-	-	-	-
-		R4212271X	R4212272X	R4012286	R4012282	-	-	-	-
-		R4212275	R4212276	R4012283	R4012279	-	-	-	-
-		R4212271X	R4212272X	R4012286	R4012282	-	-	-	-
-		R4212275	R4212276	R4012283	R4012279	-	-	-	-

MAKE MODEL YEAR AXLE CODE AXLE WEIGHT	AXLE & BRK. TYPE	BRK. MFG.	BRAKE SIZE	FMSI	MERITOR DISC PAD OR BRAKE SHOE	MERITOR GUIDE PIN OR RETURN SPRING KIT	MERITOR CALIPER HWD. KIT OR RETURN SPRING KIT	MERITOR ADJUSTER KIT (LEFT WHEEL)	MERITOR ADJUSTER KIT (RIGHT WHEEL)
GMC / CHEV(Cont.)									
W 4(Cont.)									
2000 Diesel Engine 7-99 through 12-00 10,001 - 14,000 lbs GVWR Class 3 Vehicle	Fd	Isuzu		7697 - D825	MD825[369]	-	-	N/A	N/A
Gasoline Engine 14,001 - 16,000 lbs GVWR Class 4 Vehicle	Fd	Isuzu		7699 - D827	MD827[369]	R4112504	-	N/A	N/A
1999 Diesel Engine 1-98 Through 4-99 10,001 - 14,000 lbs GVWR Class 3 Vehicle	Fd	Isuzu		7697 - D825	MD825[369]	R4112503	-	N/A	N/A
Diesel Engine 5-99 through 6-99 10,001 - 14,000 lbs GVWR Class 3 Vehicle	Fd	Isuzu		7697 - D825	MD825[369]	R4112503	-	N/A	N/A
Diesel Engine 7-99 through 12-00 10,001 - 14,000 lbs GVWR Class 3 Vehicle	Fd	Isuzu		7697 - D825	MD825[369]	-	-	N/A	N/A
Gasoline Engine 2-99 Through 6-99 Except 4 Wheel ABS 14,001 - 16,000 lbs GVWR Class 4 Vehicle	Fd	Isuzu		7698 - D826	MD826[369]	R4112504	-	N/A	N/A
Gasoline Engine 2-99 Through 6-99 With 4 Wheel ABS 14,001 - 16,000 lbs GVWR Class 4 Vehicle	Fd	Isuzu		7699 - D827	MD827[369]	R4112504	-	N/A	N/A
Gasoline Engine 7-99 Through 14,001 - 16,000 lbs GVWR Class 4 Vehicle	Fd	Isuzu		7699 - D827	MD827[369]	R4112504	-	N/A	N/A
1998 Diesel Engine 1-98 Through 4-99 10,001 - 14,000 lbs GVWR Class 3 Vehicle	Fd	Isuzu		7697 - D825	MD825[369]	R4112503	-	N/A	N/A
Gasoline Engine 10-97 Through 1-99 14,001 - 16,000 lbs GVWR Class 4 Vehicle	Fd	Isuzu		7698 - D826	MD826[369]	R4112503	-	N/A	N/A
1997 Diesel Engine 10,001 - 14,000 lbs GVWR Class 3 Vehicle	Fd	Isuzu			-	-	-	N/A	N/A
Gasoline Engine 14,001 - 16,000 lbs GVWR Class 4 Vehicle	Fd	Isuzu			-	-	-	N/A	N/A
W 5									
2005 Gasoline Engine 7-04 through 10,001 - 14,000 lbs GVWR Class 3 Vehicle	Fd	Isuzu		7699 - D827	MD827[368]	R4112503	-	N/A	N/A
Diesel Engine 1-04 through 16,001 - 19,500 lbs GVWR Class 5 Vehicle	Fd			7699 - D827	MD827[369]	-	-	N/A	N/A
2004 Gasoline Engine 12-03 through 6-04 10,001 - 14,000 lbs GVWR Class 3 Vehicle	Fd	Isuzu		7697 - D825	MD825[368]	R4112503	-	N/A	N/A

368 - Isuzu # includes all clips

369 - Includes all clips

MERITOR DRUM OR ROTOR NO.	CALIPER OR CYLINDER BORE SIZE	MERITOR CALIPER OR WHEEL CYLINDER (LEFT)	MERITOR CALIPER OR WHEEL CYLINDER (RIGHT)	MERITOR CALIPER OR WHEEL CYLINDER REPAIR KIT	MERITOR CALIPER PISTON	MERITOR MASTER CYLINDER	MERITOR MASTER CYLINDER KIT	MERITOR BRAKE HOSE (LEFT)	MERITOR BRAKE HOSE (RIGHT)
GMC / CHEV(Cont.)									
W 4(Cont.)									
-		-	-	-	-	-	-	-	-
-		R4212275	R4212276	R4012283	R4012279	-	-	-	-
-		R4212271X	R4212272X	R4012286	R4012282	-	-	-	-
-		R4212271X	R4212272X	R4012286	R4012282	-	-	-	-
-		-	-	-	-	-	-	-	-
-		R4212277X	R4212278X	R4012283	R4012279	-	-	-	-
-		R4212275	R4212276	R4012283	R4012279	-	-	-	-
-		R4212275	R4212276	R4012283	R4012279	-	-	-	-
-		R4212271X	R4212272X	R4012286	R4012282	-	-	-	-
-		R4212277X	R4212278X	R4012283	R4012279	-	-	-	-
-		-	-	-	-	-	-	-	-
-		-	-	-	-	-	-	-	-
W 5									
-		R4212269	-	-	-	-	-	-	-
R4421493R		R4212273	R4212274	R4012284	R4012280	-	-	-	-
-		R4212271X	R4212272X	R4012286	R4012282	-	-	-	-

MAKE MODEL YEAR AXLE CODE AXLE WEIGHT	AXLE & BRK. TYPE	BRK. MFG.	BRAKE SIZE	FMSI	MERITOR DISC PAD OR BRAKE SHOE	MERITOR GUIDE PIN OR RETURN SPRING KIT	MERITOR CALIPER HWD. KIT OR RETURN SPRING KIT	MERITOR ADJUSTER KIT (LEFT WHEEL)	MERITOR ADJUSTER KIT (RIGHT WHEEL)
GMC / CHEV(Cont.)									
W 5(Cont.)									
2004 Gasoline Engine 7-04 through 10,001 - 14,000 lbs GVWR Class 3 Vehicle	Fd	Isuzu		7699 - D827	MD827[368]	R4112503	-	N/A	N/A
Diesel Engine 1-04 through 16,001 - 19,500 lbs GVWR Class 5 Vehicle	Fd			7699 - D827	MD827[369]	-	-	N/A	N/A
2003 Gasoline Engine 7-03 through 11-03 10,001 - 14,000 lbs GVWR Class 3 Vehicle	Fd	Isuzu		7697 - D825	MD825[368]	R4112503	-	N/A	N/A
Gasoline Engine 7-03 through 6-04 10,001 - 14,000 lbs GVWR Class 3 Vehicle	Fd	Isuzu		7697 - D825	MD825[368]	R4112503	-	N/A	N/A
Diesel Engine 1-03 through 12-03 16,001 - 19,500 lbs GVWR Class 5 Vehicle	Fd	Isuzu		7699 - D827	MD827[369]	R4112504	-	N/A	N/A
2002 Gasoline Engine 10,001 - 14,000 lbs GVWR Class 3 Vehicle	Fd	Isuzu		7697 - D825	MD825[368]	R4112503	-	N/A	N/A
Diesel Engine 1-01 through 12-02 16,001 - 19,500 lbs GVWR Class 5 Vehicle	Fd	Isuzu		7699 - D827	MD827[369]	R4112504	-	N/A	N/A
2001 Gasoline Engine 10,001 - 14,000 lbs GVWR Class 3 Vehicle	Fd	Isuzu		7697 - D825	MD825[369]	R4112503	-	N/A	N/A
Diesel Engine 1-01 through 12-02 16,001 - 19,500 lbs GVWR Class 5 Vehicle	Fd	Isuzu		7699 - D827	MD827[369]	R4112504	-	N/A	N/A
2000 Gasoline Engine 10,001 - 14,000 lbs GVWR Class 3 Vehicle	Fd	Isuzu		7697 - D825	MD825[369]	R4112503	-	N/A	N/A
Diesel Engine 16,001 - 19,500 lbs GVWR Class 5 Vehicle	Fd	Isuzu		7699 - D827	MD827[369]	R4112504	-	N/A	N/A
1999 Gasoline Engine 10-97 through 5-99 10,001 - 14,000 lbs GVWR Class 3 Vehicle	Fd	Isuzu		7697 - D825	MD825[369]	R4112503	-	N/A	N/A
Gasoline Engine 6-99 through 10,001 - 14,000 lbs GVWR Class 3 Vehicle	Fd	Isuzu		7697 - D825	MD825[369]	R4112503	-	N/A	N/A
Diesel Engine 16,001 - 19,500 lbs GVWR Class 5 Vehicle	Fd	Isuzu		7699 - D827	MD827[369]	R4112504	-	N/A	N/A
1998 Gasoline Engine 10-97 through 5-99 10,001 - 14,000 lbs GVWR Class 3 Vehicle	Fd	Isuzu		7697 - D825	MD825[369]	R4112503	-	N/A	N/A
Diesel Engine 16,001 - 19,500 lbs GVWR Class 5 Vehicle	Fd	Isuzu		7698 - D826	MD826[369]	R4112503	-	N/A	N/A
1997	Fd	Isuzu			-	-	-	N/A	N/A

368 - Isuzu # includes all clips

369 - Includes all clips

MERITOR DRUM OR ROTOR NO.	CALIPER OR CYLINDER BORE SIZE	MERITOR CALIPER OR WHEEL CYLINDER (LEFT)	MERITOR CALIPER OR WHEEL CYLINDER (RIGHT)	MERITOR CALIPER OR WHEEL CYLINDER REPAIR KIT	MERITOR CALIPER PISTON	MERITOR MASTER CYLINDER	MERITOR MASTER CYLINDER KIT	MERITOR BRAKE HOSE (LEFT)	MERITOR BRAKE HOSE (RIGHT)
GMC / CHEV(Cont.)									
W 5(Cont.)									
-		R4212269	-	-	-	-	-	-	-
R4421493R		R4212273	R4212274	R4012284	R4012280	-	-	-	-
-		R4212271X	R4212272X	R4012286	R4012282	-	-	-	-
-		R4212271X	R4212272X	R4012286	R4012282	-	-	-	-
R4421493R		R4212275	R4212276	R4012283	R4012279	-	-	-	-
-		R4212271X	R4212272X	R4012286	R4012282	-	-	-	-
R4421493R		R4212275	R4212276	R4012283	R4012279	-	-	-	-
-		R4212271X	R4212272X	R4012286	R4012282	-	-	-	-
R4421493R		R4212275	R4212276	R4012283	R4012279	-	-	-	-
-		R4212271X	R4212272X	R4012286	R4012282	-	-	-	-
R4421493R		R4212275	R4212276	R4012283	R4012279	-	-	-	-
-		R4212271X	R4212272X	R4012286	R4012282	-	-	-	-
-		R4212271X	R4212272X	R4012286	R4012282	-	-	-	-
R4421493R		R4212275	R4212276	R4012283	R4012279	-	-	-	-
-		R4212271X	R4212272X	R4012286	R4012282	-	-	-	-
-		R4212277X	R4212278X	R4012283	R4012279	-	-	-	-
-		-	-	-	-	-	-	-	-

MAKE MODEL YEAR AXLE CODE AXLE WEIGHT	AXLE & BRK. TYPE	BRK. MFG.	BRAKE SIZE	FMSI	MERITOR DISC PAD OR BRAKE SHOE	MERITOR GUIDE PIN OR RETURN SPRING KIT	MERITOR CALIPER HWD. KIT OR RETURN SPRING KIT	MERITOR ADJUSTER KIT (LEFT WHEEL)	MERITOR ADJUSTER KIT (RIGHT WHEEL)
HINO									
145									
2005									
14,000 lb GVW Class 3	Fd	Meritor		7636 - D769	MD769	N/A	R4011729	N/A	N/A
	Fd	Meritor			MDP5094[370]	SJ1035	SP8566	N/A	N/A
	Fd	Meritor		7636 - D769	MD769	N/A	R4011729	N/A	N/A
	Fd	Meritor			MDP5094[370]	SJ1035	SP8566	N/A	N/A
	Rd	Meritor		7636 - D769	MD769	N/A	R4011729	N/A	N/A
	Rd	Meritor			-	-	-	N/A	N/A
	Rd	Meritor		7636 - D769	MD769	N/A	R4011729	N/A	N/A
	Rd	Meritor			-	-	-	N/A	N/A
2004									
	Fd	Meritor		7636 - D769	MD769	N/A	R4011729	N/A	N/A
	Fd	Meritor			MDP5094[370]	SJ1035	SP8566	N/A	N/A
	Fd	Meritor			MDP5094[370]	SJ1035	SP8566	N/A	N/A
	Fd	Meritor		7636 - D769	MD769	N/A	R4011729	N/A	N/A
	Rd	Meritor		7636 - D769	MD769	N/A	R4011729	N/A	N/A
	Rd	Meritor			-	-	-	N/A	N/A
	Rd	Meritor			-	-	-	N/A	N/A
	Rd	Meritor		7636 - D769	MD769	N/A	R4011729	N/A	N/A
2003									
	Fd	Meritor			MDP5094[370]	SJ1035	SP8566	N/A	N/A
	Fd	Meritor		7636 - D769	MD769	N/A	R4011729	N/A	N/A
	Fd	Meritor			MDP5094[370]	SJ1035	SP8566	N/A	N/A
	Fd	Meritor		7636 - D769	MD769	N/A	R4011729	N/A	N/A
	Rd	Meritor			-	-	-	N/A	N/A
	Rd	Meritor			-	-	-	N/A	N/A
	Rd	Meritor		7636 - D769	MD769	N/A	R4011729	N/A	N/A
	Rd	Meritor		7636 - D769	MD769	N/A	R4011729	N/A	N/A
165									
2005									
16,000 lb GVW Class 4	Fd	Meritor			MDP5094[370]	SJ1035	SP8566	N/A	N/A
	Fd	Meritor		7636 - D769	MD769	N/A	R4011729	N/A	N/A
	Fd	Meritor			MDP5094[370]	SJ1035	SP8566	N/A	N/A
	Fd	Meritor		7636 - D769	MD769	N/A	R4011729	N/A	N/A
	Rd	Meritor		7636 - D769	MD769	N/A	R4011729	N/A	N/A
	Rd	Meritor		7636 - D769	MD769	N/A	R4011729	N/A	N/A
	Rd	Meritor			-	-	-	N/A	N/A
16,000 lb GVW Class 4									
	Rd	Meritor			-	-	-	N/A	N/A
2004									
16,000 lb GVW Class 4	Fd	Meritor		7636 - D769	MD769	N/A	R4011729	N/A	N/A
	Fd	Meritor			MDP5094[370]	SJ1035	SP8566	N/A	N/A
	Fd	Meritor		7636 - D769	MD769	N/A	R4011729	N/A	N/A
	Fd	Meritor			MDP5094[370]	SJ1035	SP8566	N/A	N/A
	Rd	Meritor			-	-	-	N/A	N/A
	Rd	Meritor		7636 - D769	MD769	N/A	R4011729	N/A	N/A
	Rd	Meritor		7636 - D769	MD769	N/A	R4011729	N/A	N/A
16,000 lb GVW Class 4									
	Rd	Meritor			-	-	-	N/A	N/A
2003									
16,000 lb GVW Class 4	Fd	Meritor		7636 - D769	MD769	N/A	R4011729	N/A	N/A
	Fd	Meritor			MDP5094[370]	SJ1035	SP8566	N/A	N/A
	Fd	Meritor			MDP5094[370]	SJ1035	SP8566	N/A	N/A
	Fd	Meritor		7636 - D769	MD769	N/A	R4011729	N/A	N/A
	Rd	Meritor			-	-	-	N/A	N/A
	Rd	Meritor		7636 - D769	MD769	N/A	R4011729	N/A	N/A
	Rd	Meritor		7636 - D769	MD769	N/A	R4011729	N/A	N/A
16,000 lb GVW Class 4									
	Rd	Meritor			-	-	-	N/A	N/A
185									
2005									
18,000 lb GVW Class 5	Fd	Meritor			MDP5094[370]	SJ1035	SP8566	N/A	N/A
	Fd	Meritor		7636 - D769	MD769	N/A	R4011729	N/A	N/A
	Fd	Meritor			MDP5094[370]	SJ1035	SP8566	N/A	N/A
	Fd	Meritor		7636 - D769	MD769	N/A	R4011729	N/A	N/A

370 - includes pad retaining plate

MERITOR DRUM OR ROTOR NO.	CALIPER OR CYLINDER BORE SIZE	MERITOR CALIPER OR WHEEL CYLINDER (LEFT)	MERITOR CALIPER OR WHEEL CYLINDER (RIGHT)	MERITOR CALIPER OR WHEEL CYLINDER REPAIR KIT	MERITOR CALIPER PISTON	MERITOR MASTER CYLINDER	MERITOR MASTER CYLINDER KIT	MERITOR BRAKE HOSE (LEFT)	MERITOR BRAKE HOSE (RIGHT)
									HINO
									145
23-123625-002	70mm	60450469002	60450468002	R4011730	60050334	-	-	-	-
23-123626-002	60mm	LRG717	LRG716	SP8597	31320085	-	-	-	-
23-123624-002	64mm	60450474001	60450473001	R4011731	R4011511	-	-	-	-
23-123618-002	60mm	LRG715	1229-F-474	SP8597	31320085	-	-	-	-
23-123625-002	70mm	60450469002	60450468002	R4011730	60050334	-	-	-	-
23-123618-002		-	-	-	-	-	-	-	-
23-123624-002	64mm	60450474001	60450473001	R4011731	R4011511	-	-	-	-
23-123626-002		-	-	-	-	-	-	-	-
23-123624-002	64mm	60450474001	60450473001	R4011731	R4011511	-	-	-	-
23-123618-002	60mm	LRG715	1229-F-474	SP8597	31320085	-	-	-	-
23-123626-002	60mm	LRG717	LRG716	SP8597	31320085	-	-	-	-
23-123625-002	70mm	60450469002	60450468002	R4011730	60050334	-	-	-	-
23-123624-002	64mm	60450474001	60450473001	R4011731	R4011511	-	-	-	-
23-123626-002		-	-	-	-	-	-	-	-
23-123618-002		-	-	-	-	-	-	-	-
23-123625-002	70mm	60450469002	60450468002	R4011730	60050334	-	-	-	-
23-123626-002	60mm	LRG717	LRG716	SP8597	31320085	-	-	-	-
23-123625-002	70mm	60450469002	60450468002	R4011730	60050334	-	-	-	-
23-123618-002	60mm	LRG715	1229-F-474	SP8597	31320085	-	-	-	-
23-123624-002	64mm	60450474001	60450473001	R4011731	R4011511	-	-	-	-
23-123618-002		-	-	-	-	-	-	-	-
23-123626-002		-	-	-	-	-	-	-	-
23-123625-002	70mm	60450469002	60450468002	R4011730	60050334	-	-	-	-
23-123624-002	64mm	60450474001	60450473001	R4011731	R4011511	-	-	-	-
									165
23-123626-002	60mm	LRG717	LRG716	SP8597	31320085	-	-	-	-
23-123624-002	64mm	60450474001	60450473001	R4011731	R4011511	-	-	-	-
23-123618-002	60mm	LRG715	1229-F-474	SP8597	31320085	-	-	-	-
23-123625-002	70mm	60450469002	60450468002	R4011730	60050334	-	-	-	-
23-123625-002	70mm	60450469002	60450468002	R4011730	60050334	-	-	-	-
23-123624-002	64mm	60450474001	60450473001	R4011731	R4011511	-	-	-	-
23-123626-002		-	-	-	-	-	-	-	-
23-123618-002		-	-	-	-	-	-	-	-
23-123624-002	64mm	60450474001	60450473001	R4011731	R4011511	-	-	-	-
23-123626-002	60mm	LRG717	LRG716	SP8597	31320085	-	-	-	-
23-123625-002	70mm	60450469002	60450468002	R4011730	60050334	-	-	-	-
23-123618-002	60mm	LRG715	1229-F-474	SP8597	31320085	-	-	-	-
23-123626-002		-	-	-	-	-	-	-	-
23-123624-002	64mm	60450474001	60450473001	R4011731	R4011511	-	-	-	-
23-123625-002	70mm	60450469002	60450468002	R4011730	60050334	-	-	-	-
23-123618-002		-	-	-	-	-	-	-	-
23-123624-002	64mm	60450474001	60450473001	R4011731	R4011511	-	-	-	-
23-123626-002	60mm	LRG717	LRG716	SP8597	31320085	-	-	-	-
23-123625-002	70mm	60450469002	60450468002	R4011730	60050334	-	-	-	-
23-123618-002	60mm	LRG715	1229-F-474	SP8597	31320085	-	-	-	-
23-123626-002		-	-	-	-	-	-	-	-
23-123624-002	64mm	60450474001	60450473001	R4011731	R4011511	-	-	-	-
23-123625-002	70mm	60450469002	60450468002	R4011730	60050334	-	-	-	-
23-123618-002		-	-	-	-	-	-	-	-
									185
23-123626-002	60mm	LRG717	LRG716	SP8597	31320085	-	-	-	-
23-123625-002	70mm	60450469002	60450468002	R4011730	60050334	-	-	-	-
23-123618-002	60mm	LRG715	1229-F-474	SP8597	31320085	-	-	-	-
23-123624-002	64mm	60450474001	60450473001	R4011731	R4011511	-	-	-	-

MAKE MODEL YEAR AXLE CODE AXLE WEIGHT	AXLE & BRK. TYPE	BRK. MFG.	BRAKE SIZE	FMSI	MERITOR DISC PAD OR BRAKE SHOE	MERITOR GUIDE PIN OR RETURN SPRING KIT	MERITOR CALIPER HWD. KIT OR RETURN SPRING KIT	MERITOR ADJUSTER KIT (LEFT WHEEL)	MERITOR ADJUSTER KIT (RIGHT WHEEL)
HINO(Cont.)									
185(Cont.)									
2005									
	Rd	Meritor			-	-	-	N/A	N/A
	Rd	Meritor		7636 - D769	MD769	N/A	R4011729	N/A	N/A
	Rd	Meritor		7636 - D769	MD769	N/A	R4011729	N/A	N/A
18,000 lb GVW Class 5									
	Rd	Meritor			-	-	-	N/A	N/A
2004									
18,000 lb GVW Class 5	Fd	Meritor		7636 - D769	MD769	N/A	R4011729	N/A	N/A
	Fd	Meritor		7636 - D769	MD769	N/A	R4011729	N/A	N/A
	Fd	Meritor			MDP5094[370]	SJ1035	SP8566	N/A	N/A
	Fd	Meritor			MDP5094[370]	SJ1035	SP8566	N/A	N/A
	Rd	Meritor		7636 - D769	MD769	N/A	R4011729	N/A	N/A
	Rd	Meritor		7636 - D769	MD769	N/A	R4011729	N/A	N/A
	Rd	Meritor			-	-	-	N/A	N/A
18,000 lb GVW Class 5									
	Rd	Meritor			-	-	-	N/A	N/A
2003									
18,000 lb GVW Class 5	Fd	Meritor		7636 - D769	MD769	N/A	R4011729	N/A	N/A
	Fd	Meritor			MDP5094[370]	SJ1035	SP8566	N/A	N/A
	Fd	Meritor		7636 - D769	MD769	N/A	R4011729	N/A	N/A
	Fd	Meritor			MDP5094[370]	SJ1035	SP8566	N/A	N/A
	Rd	Meritor			-	-	-	N/A	N/A
	Rd	Meritor		7636 - D769	MD769	N/A	R4011729	N/A	N/A
	Rd	Meritor		7636 - D769	MD769	N/A	R4011729	N/A	N/A
18,000 lb GVW Class 5									
	Rd	Meritor			-	-	-	N/A	N/A
238 / 238LP									
2005									
23,000 lb GVW Class 6	Fd	Meritor		7636 - D769	MD769	N/A	R4011729	N/A	N/A
	Fd	Meritor			MDP5094[370]	SJ1035	SP8566	N/A	N/A
	Fd	Meritor			MDP5094[370]	SJ1035	SP8566	N/A	N/A
	Fd	Meritor		7636 - D769	MD769	N/A	R4011729	N/A	N/A
	Rd	Meritor			-	-	-	N/A	N/A
	Rd	Meritor		7636 - D769	MD769	N/A	R4011729	N/A	N/A
	Rd	Meritor		7636 - D769	MD769	N/A	R4011729	N/A	N/A
23,000 lb GVW Class 6									
	Rd	Meritor			-	-	-	N/A	N/A
2004									
23,000 lb GVW Class 6	Fd	Meritor		7636 - D769	MD769	N/A	R4011729	N/A	N/A
	Fd	Meritor		7636 - D769	MD769	N/A	R4011729	N/A	N/A
	Fd	Meritor			MDP5094[370]	SJ1035	SP8566	N/A	N/A
	Fd	Meritor			MDP5094[370]	SJ1035	SP8566	N/A	N/A
	Rd	Meritor		7636 - D769	MD769	N/A	R4011729	N/A	N/A
	Rd	Meritor			-	-	-	N/A	N/A
	Rd	Meritor		7636 - D769	MD769	N/A	R4011729	N/A	N/A
23,000 lb GVW Class 6									
	Rd	Meritor			-	-	-	N/A	N/A
2003									
23,000 lb GVW Class 6	Fd	Meritor		7636 - D769	MD769	N/A	R4011729	N/A	N/A
	Fd	Meritor		7636 - D769	MD769	N/A	R4011729	N/A	N/A
	Fd	Meritor			MDP5094[370]	SJ1035	SP8566	N/A	N/A
	Fd	Meritor			MDP5094[370]	SJ1035	SP8566	N/A	N/A
	Rd	Meritor		7636 - D769	MD769	N/A	R4011729	N/A	N/A
	Rd	Meritor			-	-	-	N/A	N/A
	Rd	Meritor		7636 - D769	MD769	N/A	R4011729	N/A	N/A
23,000 lb GVW Class 6									
	Rd	Meritor			-	-	-	N/A	N/A
268 / 268A									
2005									
23,000 lb GVW Class 6	Fd	Meritor		7636 - D769	MD769	N/A	R4011729	N/A	N/A
	Fd	Meritor			MDP5094[370]	SJ1035	SP8566	N/A	N/A
	Fd	Meritor			MDP5094[370]	SJ1035	SP8566	N/A	N/A
	Fd	Meritor		7636 - D769	MD769	N/A	R4011729	N/A	N/A
	Rd	Meritor		7636 - D769	MD769	N/A	R4011729	N/A	N/A

370 - includes pad retaining plate

MERITOR DRUM OR ROTOR NO.	CALIPER OR CYLINDER BORE SIZE	MERITOR CALIPER OR WHEEL CYLINDER (LEFT)	MERITOR CALIPER OR WHEEL CYLINDER (RIGHT)	MERITOR CALIPER OR WHEEL CYLINDER REPAIR KIT	MERITOR CALIPER PISTON	MERITOR MASTER CYLINDER	MERITOR MASTER CYLINDER KIT	MERITOR BRAKE HOSE (LEFT)	MERITOR BRAKE HOSE (RIGHT)
									HINO(Cont.)
									185(Cont.)
23-123626-002		-	-	-	-	-	-	-	-
23-123624-002	64mm	60450474001	60450473001	R4011731	R4011511	-	-	-	-
23-123625-002	70mm	60450469002	60450468002	R4011730	60050334	-	-	-	-
23-123618-002		-	-	-	-	-	-	-	-
23-123625-002	70mm	60450469002	60450468002	R4011730	60050334	-	-	-	-
23-123624-002	64mm	60450474001	60450473001	R4011731	R4011511	-	-	-	-
23-123626-002	60mm	LRG717	LRG716	SP8597	31320085	-	-	-	-
23-123618-002	60mm	LRG715	1229-F-474	SP8597	31320085	-	-	-	-
23-123625-002	70mm	60450469002	60450468002	R4011730	60050334	-	-	-	-
23-123624-002	64mm	60450474001	60450473001	R4011731	R4011511	-	-	-	-
23-123626-002		-	-	-	-	-	-	-	-
23-123618-002		-	-	-	-	-	-	-	-
23-123625-002	70mm	60450469002	60450468002	R4011730	60050334	-	-	-	-
23-123626-002	60mm	LRG717	LRG716	SP8597	31320085	-	-	-	-
23-123624-002	64mm	60450474001	60450473001	R4011731	R4011511	-	-	-	-
23-123618-002	60mm	LRG715	1229-F-474	SP8597	31320085	-	-	-	-
23-123626-002		-	-	-	-	-	-	-	-
23-123624-002	64mm	60450474001	60450473001	R4011731	R4011511	-	-	-	-
23-123625-002	70mm	60450469002	60450468002	R4011730	60050334	-	-	-	-
23-123618-002		-	-	-	-	-	-	-	-
									238 / 238LP
23-123625-002	70mm	60450469002	60450468002	R4011730	60050334	-	-	-	-
23-123618-002	60mm	LRG715	1229-F-474	SP8597	31320085	-	-	-	-
23-123626-002	60mm	LRG717	LRG716	SP8597	31320085	-	-	-	-
23-123624-002	64mm	60450474001	60450473001	R4011731	R4011511	-	-	-	-
23-123626-002		-	-	-	-	-	-	-	-
23-123625-002	70mm	60450469002	60450468002	R4011730	60050334	-	-	-	-
23-123624-002	64mm	60450474001	60450473001	R4011731	R4011511	-	-	-	-
23-123618-002		-	-	-	-	-	-	-	-
23-123625-002	70mm	60450469002	60450468002	R4011730	60050334	-	-	-	-
23-123624-002	64mm	60450474001	60450473001	R4011731	R4011511	-	-	-	-
23-123626-002	60mm	LRG717	LRG716	SP8597	31320085	-	-	-	-
23-123618-002	60mm	LRG715	1229-F-474	SP8597	31320085	-	-	-	-
23-123625-002	70mm	60450469002	60450468002	R4011730	60050334	-	-	-	-
23-123626-002		-	-	-	-	-	-	-	-
23-123624-002	64mm	60450474001	60450473001	R4011731	R4011511	-	-	-	-
23-123618-002		-	-	-	-	-	-	-	-
23-123625-002	70mm	60450469002	60450468002	R4011730	60050334	-	-	-	-
23-123624-002	64mm	60450474001	60450473001	R4011731	R4011511	-	-	-	-
23-123618-002	60mm	LRG715	1229-F-474	SP8597	31320085	-	-	-	-
23-123626-002	60mm	LRG717	LRG716	SP8597	31320085	-	-	-	-
23-123624-002	64mm	60450474001	60450473001	R4011731	R4011511	-	-	-	-
23-123626-002		-	-	-	-	-	-	-	-
23-123625-002	70mm	60450469002	60450468002	R4011730	60050334	-	-	-	-
23-123618-002		-	-	-	-	-	-	-	-
									268 / 268A
23-123625-002	70mm	60450469002	60450468002	R4011730	60050334	-	-	-	-
23-123618-002	60mm	LRG715	1229-F-474	SP8597	31320085	-	-	-	-
23-123626-002	60mm	LRG717	LRG716	SP8597	31320085	-	-	-	-
23-123624-002	64mm	60450474001	60450473001	R4011731	R4011511	-	-	-	-
23-123624-002	64mm	60450474001	60450473001	R4011731	R4011511	-	-	-	-

MAKE MODEL YEAR AXLE CODE AXLE WEIGHT	AXLE & BRK. TYPE	BRK. MFG.	BRAKE SIZE	FMSI	MERITOR DISC PAD OR BRAKE SHOE	MERITOR GUIDE PIN OR RETURN SPRING KIT	MERITOR CALIPER HWD. KIT OR RETURN SPRING KIT	MERITOR ADJUSTER KIT (LEFT WHEEL)	MERITOR ADJUSTER KIT (RIGHT WHEEL)
HINO(Cont.)									
268 / 268A(Cont.)									
2005									
	Rd	Meritor		7636 - D769	MD769	N/A	R4011729	N/A	N/A
	Rd	Meritor			-	-	-	N/A	N/A
23,000 lb GVW Class 6									
	Rd	Meritor			-	-	-	N/A	N/A
2004									
23,000 lb GVW Class 6	Fd	Meritor		7636 - D769	MD769	N/A	R4011729	N/A	N/A
	Fd	Meritor			MDP5094[370]	SJ1035	SP8566	N/A	N/A
	Fd	Meritor			MDP5094[370]	SJ1035	SP8566	N/A	N/A
	Fd	Meritor		7636 - D769	MD769	N/A	R4011729	N/A	N/A
	Rd	Meritor			-	-	-	N/A	N/A
	Rd	Meritor		7636 - D769	MD769	N/A	R4011729	N/A	N/A
	Rd	Meritor		7636 - D769	MD769	N/A	R4011729	N/A	N/A
23,000 lb GVW Class 6									
	Rd	Meritor			-	-	-	N/A	N/A
2003									
23,000 lb GVW Class 6	Fd	Meritor		7636 - D769	MD769	N/A	R4011729	N/A	N/A
	Fd	Meritor			MDP5094[370]	SJ1035	SP8566	N/A	N/A
	Fd	Meritor		7636 - D769	MD769	N/A	R4011729	N/A	N/A
	Fd	Meritor			MDP5094[370]	SJ1035	SP8566	N/A	N/A
	Rd	Meritor		7636 - D769	MD769	N/A	R4011729	N/A	N/A
	Rd	Meritor		7636 - D769	MD769	N/A	R4011729	N/A	N/A
	Rd	Meritor			-	-	-	N/A	N/A
23,000 lb GVW Class 6									
	Rd	Meritor			-	-	-	N/A	N/A
338									
2005									
33,000 lb GVW Class 7	Fd	Meritor			MDP5094[370]	SJ1035	SP8566	N/A	N/A
	Fd	Meritor			MDP5094[370]	SJ1035	SP8566	N/A	N/A
	Fd	Meritor		7636 - D769	MD769	N/A	R4011729	N/A	N/A
	Fd	Meritor		7636 - D769	MD769	N/A	R4011729	N/A	N/A
	Rd	Meritor		7636 - D769	MD769	N/A	R4011729	N/A	N/A
	Rd	Meritor		7636 - D769	MD769	N/A	R4011729	N/A	N/A
	Rd	Meritor			-	-	-	N/A	N/A
33,000 lb GVW Class 7									
	Rd	Meritor			-	-	-	N/A	N/A
2004									
33,000 lb GVW Class 7	Fd	Meritor		7636 - D769	MD769	N/A	R4011729	N/A	N/A
	Fd	Meritor		7636 - D769	MD769	N/A	R4011729	N/A	N/A
	Fd	Meritor			MDP5094[370]	SJ1035	SP8566	N/A	N/A
	Fd	Meritor			MDP5094[370]	SJ1035	SP8566	N/A	N/A
	Rd	Meritor		7636 - D769	MD769	N/A	R4011729	N/A	N/A
	Rd	Meritor			-	-	-	N/A	N/A
	Rd	Meritor		7636 - D769	MD769	N/A	R4011729	N/A	N/A
33,000 lb GVW Class 7									
	Rd	Meritor			-	-	-	N/A	N/A
2003									
33,000 lb GVW Class 7	Fd	Meritor			MDP5094[370]	SJ1035	SP8566	N/A	N/A
	Fd	Meritor		7636 - D769	MD769	N/A	R4011729	N/A	N/A
	Fd	Meritor		7636 - D769	MD769	N/A	R4011729	N/A	N/A
	Fd	Meritor			MDP5094[370]	SJ1035	SP8566	N/A	N/A
	Rd	Meritor			-	-	-	N/A	N/A
	Rd	Meritor		7636 - D769	MD769	N/A	R4011729	N/A	N/A
	Rd	Meritor		7636 - D769	MD769	N/A	R4011729	N/A	N/A
33,000 lb GVW Class 7									
	Rd	Meritor			-	-	-	N/A	N/A
FA									
1994									
	Fm		320mm x 75mm	1468 - S683	R409861	R409847	R409848	N/A	N/A
	Rm		320mm x 75mm	1468 - S683	R409861	R409847	R409848	N/A	N/A
1993									
	Fm		320mm x 75mm	1468 - S683	R409861	R409847	R409848	N/A	N/A
	Rm		320mm x 75mm	1468 - S683	R409861	R409847	R409848	N/A	N/A

370 - includes pad retaining plate

MERITOR DRUM OR ROTOR NO.	CALIPER OR CYLINDER BORE SIZE	MERITOR CALIPER OR WHEEL CYLINDER (LEFT)	MERITOR CALIPER OR WHEEL CYLINDER (RIGHT)	MERITOR CALIPER OR WHEEL CYLINDER REPAIR KIT	MERITOR CALIPER PISTON	MERITOR MASTER CYLINDER	MERITOR MASTER CYLINDER KIT	MERITOR BRAKE HOSE (LEFT)	MERITOR BRAKE HOSE (RIGHT)
									HINO(Cont.)
									268 / 268A(Cont.)
23-123625-002	70mm	60450469002	60450468002	R4011730	60050334	-	-	-	-
23-123626-002		-	-	-	-	-	-	-	-
23-123618-002		-	-	-	-	-	-	-	-
23-123625-002	70mm	60450469002	60450468002	R4011730	60050334	-	-	-	-
23-123618-002	60mm	LRG715	1229-F-474	SP8597	31320085	-	-	-	-
23-123626-002	60mm	LRG717	LRG716	SP8597	31320085	-	-	-	-
23-123624-002	64mm	60450474001	60450473001	R4011731	R4011511	-	-	-	-
23-123626-002		-	-	-	-	-	-	-	-
23-123624-002	64mm	60450474001	60450473001	R4011731	R4011511	-	-	-	-
23-123625-002	70mm	60450469002	60450468002	R4011730	60050334	-	-	-	-
23-123618-002		-	-	-	-	-	-	-	-
23-123625-002	70mm	60450469002	60450468002	R4011730	60050334	-	-	-	-
23-123626-002	60mm	LRG717	LRG716	SP8597	31320085	-	-	-	-
23-123624-002	64mm	60450474001	60450473001	R4011731	R4011511	-	-	-	-
23-123618-002	60mm	LRG715	1229-F-474	SP8597	31320085	-	-	-	-
23-123624-002	64mm	60450474001	60450473001	R4011731	R4011511	-	-	-	-
23-123625-002	70mm	60450469002	60450468002	R4011730	60050334	-	-	-	-
23-123626-002		-	-	-	-	-	-	-	-
23-123618-002		-	-	-	-	-	-	-	-
									338
23-123618-002	60mm	LRG715	1229-F-474	SP8597	31320085	-	-	-	-
23-123626-002	60mm	LRG717	LRG716	SP8597	31320085	-	-	-	-
23-123625-002	70mm	60450469002	60450468002	R4011730	60050334	-	-	-	-
23-123624-002	64mm	60450474001	60450473001	R4011731	R4011511	-	-	-	-
23-123624-002	64mm	60450474001	60450473001	R4011731	R4011511	-	-	-	-
23-123625-002	70mm	60450469002	60450468002	R4011730	60050334	-	-	-	-
23-123626-002		-	-	-	-	-	-	-	-
23-123618-002		-	-	-	-	-	-	-	-
23-123625-002	70mm	60450469002	60450468002	R4011730	60050334	-	-	-	-
23-123624-002	64mm	60450474001	60450473001	R4011731	R4011511	-	-	-	-
23-123626-002	60mm	LRG717	LRG716	SP8597	31320085	-	-	-	-
23-123618-002	60mm	LRG715	1229-F-474	SP8597	31320085	-	-	-	-
23-123625-002	70mm	60450469002	60450468002	R4011730	60050334	-	-	-	-
23-123626-002		-	-	-	-	-	-	-	-
23-123624-002	64mm	60450474001	60450473001	R4011731	R4011511	-	-	-	-
23-123618-002		-	-	-	-	-	-	-	-
23-123626-002	60mm	LRG717	LRG716	SP8597	31320085	-	-	-	-
23-123624-002	64mm	60450474001	60450473001	R4011731	R4011511	-	-	-	-
23-123625-002	70mm	60450469002	60450468002	R4011730	60050334	-	-	-	-
23-123618-002	60mm	LRG715	1229-F-474	SP8597	31320085	-	-	-	-
23-123626-002		-	-	-	-	-	-	-	-
23-123625-002	70mm	60450469002	60450468002	R4011730	60050334	-	-	-	-
23-123624-002	64mm	60450474001	60450473001	R4011731	R4011511	-	-	-	-
23-123618-002		-	-	-	-	-	-	-	-
									FA
N/A		-	-	N/A	NR	-	-	-	-
N/A		-	-	N/A	NR	-	-	-	-
N/A		-	-	N/A	NR	-	-	-	-
N/A		-	-	N/A	NR	-	-	-	-

MAKE MODEL YEAR AXLE CODE AXLE WEIGHT	AXLE & BRK. TYPE	BRK. MFG.	BRAKE SIZE	FMSI	MERITOR DISC PAD OR BRAKE SHOE	MERITOR GUIDE PIN OR RETURN SPRING KIT	MERITOR CALIPER HWD. KIT OR RETURN SPRING KIT	MERITOR ADJUSTER KIT (LEFT WHEEL)	MERITOR ADJUSTER KIT (RIGHT WHEEL)
HINO(Cont.)									
FA(Cont.)									
1992	Fm		320mm x 75mm	1468 - S683	R409861	R409847	R409848	N/A	N/A
	Rm		320mm x 75mm	1468 - S683	R409861	R409847	R409848	N/A	N/A
1991	Fm		320mm x 75mm	1468 - S683	R409861	R409847	R409848	N/A	N/A
	Rm		320mm x 75mm	1468 - S683	R409861	R409847	R409848	N/A	N/A
1990	Fm		320mm x 75mm	1468 - S683	R409861	R409847	R409848	N/A	N/A
	Rm		320mm x 75mm	1468 - S683	R409861	R409847	R409848	N/A	N/A
1989	Fm		320mm x 75mm	1468 - S683	R409861	R409847	R409848	N/A	N/A
	Rm		320mm x 75mm	1468 - S683	R409861	R409847	R409848	N/A	N/A
FB									
1994	Fm		320mm x 75mm	1468 - S683	R409861	R409847	R409848	N/A	N/A
	Rm		320mm x 75mm	1468 - S683	R409861	R409847	R409848	N/A	N/A
1993	Fm		320mm x 75mm	1468 - S683	R409861	R409847	R409848	N/A	N/A
	Rm		320mm x 75mm	1468 - S683	R409861	R409847	R409848	N/A	N/A
1992	Fm		320mm x 75mm	1468 - S683	R409861	R409847	R409848	N/A	N/A
	Rm		320mm x 75mm	1468 - S683	R409861	R409847	R409848	N/A	N/A
1991	Fm		320mm x 75mm	1468 - S683	R409861	R409847	R409848	N/A	N/A
	Rm		320mm x 75mm	1468 - S683	R409861	R409847	R409848	N/A	N/A
1990	Fm		320mm x 75mm	1468 - S683	R409861	R409847	R409848	N/A	N/A
	Rm		320mm x 75mm	1468 - S683	R409861	R409847	R409848	N/A	N/A
1989	Fm		320mm x 75mm	1468 - S683	R409861	R409847	R409848	N/A	N/A
	Rm		320mm x 75mm	1468 - S683	R409861	R409847	R409848	N/A	N/A
FB-15									
1994	Fm		320mm x 110mm	1469 - S684	R409862	R409849	R409850	N/A	N/A
	Rm		320mm x 125mm	1470 - S685	R409863	R409851	R409852	N/A	N/A
1993	Fm		320mm x 110mm	1469 - S684	R409862	R409849	R409850	N/A	N/A
	Rm		320mm x 125mm	1470 - S685	R409863	R409851	R409852	N/A	N/A
1992	Fm		320mm x 110mm	1469 - S684	R409862	R409849	R409850	N/A	N/A
	Rm		320mm x 125mm	1470 - S685	R409863	R409851	R409852	N/A	N/A
1991	Fm		320mm x 110mm	1469 - S684	R409862	R409849	R409850	N/A	N/A
	Rm		320mm x 125mm	1470 - S685	R409863	R409851	R409852	N/A	N/A
1990	Fm		320mm x 110mm	1469 - S684	R409862	R409849	R409850	N/A	N/A
	Rm		320mm x 125mm	1470 - S685	R409863	R409851	R409852	N/A	N/A
1989	Fm		320mm x 110mm	1469 - S684	R409862	R409849	R409850	N/A	N/A
	Rm		320mm x 125mm	1470 - S685	R409863	R409851	R409852	N/A	N/A
1987	Fm		320mm x 110mm	1469 - S684	R409862	R409849	R409850	N/A	N/A
	Rm		320mm x 125mm	1470 - S685	R409863	R409851	R409852	N/A	N/A
1986	Fm		320mm x 110mm	1469 - S684	R409862	R409849	R409850	N/A	N/A
	Rm		320mm x 125mm	1470 - S685	R409863	R409851	R409852	N/A	N/A
FD									
1994	Fm		320mm x 110mm	1469 - S684	R409862	R409849	R409850	N/A	N/A
	Rm		320mm x 125mm	1470 - S685	R409863	R409851	R409852	N/A	N/A
1993	Fm		320mm x 110mm	1469 - S684	R409862	R409849	R409850	N/A	N/A

MERITOR DRUM OR ROTOR NO.	CALIPER OR CYLINDER BORE SIZE	MERITOR CALIPER OR WHEEL CYLINDER (LEFT)	MERITOR CALIPER OR WHEEL CYLINDER (RIGHT)	MERITOR CALIPER OR WHEEL CYLINDER REPAIR KIT	MERITOR CALIPER PISTON	MERITOR MASTER CYLINDER	MERITOR MASTER CYLINDER KIT	MERITOR BRAKE HOSE (LEFT)	MERITOR BRAKE HOSE (RIGHT)
									HINO(Cont.)
									FA(Cont.)
N/A		-	-	N/A	NR	-	-	-	-
N/A		-	-	N/A	NR	-	-	-	-
N/A		-	-	N/A	NR	-	-	-	-
N/A		-	-	N/A	NR	-	-	-	-
N/A		-	-	N/A	NR	-	-	-	-
N/A		-	-	N/A	NR	-	-	-	-
N/A		-	-	N/A	NR	-	-	-	-
N/A		-	-	N/A	NR	-	-	-	-
									FB
N/A		-	-	N/A	NR	-	-	-	-
N/A		-	-	N/A	NR	-	-	-	-
N/A		-	-	N/A	NR	-	-	-	-
N/A		-	-	N/A	NR	-	-	-	-
N/A		-	-	N/A	NR	-	-	-	-
N/A		-	-	N/A	NR	-	-	-	-
N/A		-	-	N/A	NR	-	-	-	-
N/A		-	-	N/A	NR	-	-	-	-
N/A		-	-	N/A	NR	-	-	-	-
N/A		-	-	N/A	NR	-	-	-	-
									FB-15
N/A		-	-	N/A	NR	-	-	-	-
N/A		-	-	N/A	NR	-	-	-	-
N/A		-	-	N/A	NR	-	-	-	-
N/A		-	-	N/A	NR	-	-	-	-
N/A		-	-	N/A	NR	-	-	-	-
N/A		-	-	N/A	NR	-	-	-	-
N/A		-	-	N/A	NR	-	-	-	-
N/A		-	-	N/A	NR	-	-	-	-
N/A		-	-	N/A	NR	-	-	-	-
N/A		-	-	N/A	NR	-	-	-	-
N/A		-	-	N/A	NR	-	-	-	-
N/A		-	-	N/A	NR	-	-	-	-
N/A		-	-	N/A	NR	-	-	-	-
N/A		-	-	N/A	NR	-	-	-	-
									FD
N/A		-	-	N/A	NR	-	-	-	-
N/A		-	-	N/A	NR	-	-	-	-
N/A		-	-	N/A	NR	-	-	-	-

MAKE MODEL YEAR AXLE CODE AXLE WEIGHT	AXLE & BRK. TYPE	BRK. MFG.	BRAKE SIZE	FMSI	MERITOR DISC PAD OR BRAKE SHOE	MERITOR GUIDE PIN OR RETURN SPRING KIT	MERITOR CALIPER HWD. KIT OR RETURN SPRING KIT	MERITOR ADJUSTER KIT (LEFT WHEEL)	MERITOR ADJUSTER KIT (RIGHT WHEEL)
HINO(Cont.)									
FD(Cont.)									
1993	Rm		320mm x 125mm	1470 - S685	R409863	R409851	R409852	N/A	N/A
1992	Fm		320mm x 110mm	1469 - S684	R409862	R409849	R409850	N/A	N/A
	Rm		320mm x 125mm	1470 - S685	R409863	R409851	R409852	N/A	N/A
1991	Fm		320mm x 110mm	1469 - S684	R409862	R409849	R409850	N/A	N/A
	Rm		320mm x 125mm	1470 - S685	R409863	R409851	R409852	N/A	N/A
1990	Fm		320mm x 110mm	1469 - S684	R409862	R409849	R409850	N/A	N/A
	Rm		320mm x 125mm	1470 - S685	R409863	R409851	R409852	N/A	N/A
1989	Fm		320mm x 110mm	1469 - S684	R409862	R409849	R409850	N/A	N/A
	Rm		320mm x 125mm	1470 - S685	R409863	R409851	R409852	N/A	N/A
1987	Fm		320mm x 110mm	1469 - S684	R409862	R409849	R409850	N/A	N/A
	Rm		320mm x 125mm	1470 - S685	R409863	R409851	R409852	N/A	N/A
1986	Fm		320mm x 110mm	1469 - S684	R409862	R409849	R409850	N/A	N/A
	Rm		320mm x 125mm	1470 - S685	R409863	R409851	R409852	N/A	N/A
FD5H									
1994	Fm		320mm x 110mm	1469 - S684	R409862	R409849	R409850	N/A	N/A
	Rm		320mm x 125mm	1470 - S685	R409863	R409851	R409852	N/A	N/A
1993	Fm		320mm x 110mm	1469 - S684	R409862	R409849	R409850	N/A	N/A
	Rm		320mm x 125mm	1470 - S685	R409863	R409851	R409852	N/A	N/A
1992	Fm		320mm x 110mm	1469 - S684	R409862	R409849	R409850	N/A	N/A
	Rm		320mm x 125mm	1470 - S685	R409863	R409851	R409852	N/A	N/A
1991	Fm		320mm x 110mm	1469 - S684	R409862	R409849	R409850	N/A	N/A
	Rm		320mm x 125mm	1470 - S685	R409863	R409851	R409852	N/A	N/A
1990	Fm		320mm x 110mm	1469 - S684	R409862	R409849	R409850	N/A	N/A
	Rm		320mm x 125mm	1470 - S685	R409863	R409851	R409852	N/A	N/A
1989	Fm		320mm x 110mm	1469 - S684	R409862	R409849	R409850	N/A	N/A
	Rm		320mm x 125mm	1470 - S685	R409863	R409851	R409852	N/A	N/A
1987	Fm		320mm x 110mm	1469 - S684	R409862	R409849	R409850	N/A	N/A
	Rm		320mm x 125mm	1470 - S685	R409863	R409851	R409852	N/A	N/A
1986	Fm		320mm x 110mm	1469 - S684	R409862	R409849	R409850	N/A	N/A
	Rm		320mm x 125mm	1470 - S685	R409863	R409851	R409852	N/A	N/A
FE									
1994	Fm		400mm x 120mm	1422 - S617	R467410	R409843	R409844	N/A	N/A
	Fm		400mm x 120mm	1422 - S617	R467410	R409843	R409844	N/A	N/A
1993	Fm		400mm x 120mm	1422 - S617	R467410	R409843	R409844	N/A	N/A
	Fm		400mm x 120mm	1422 - S617	R467410	R409843	R409844	N/A	N/A
1992	Fm		400mm x 120mm	1422 - S617	R467410	R409843	R409844	N/A	N/A
	Fm		400mm x 120mm	1422 - S617	R467410	R409843	R409844	N/A	N/A
1991	Fm		400mm x 120mm	1422 - S617	R467410	R409843	R409844	N/A	N/A
	Fm		400mm x 120mm	1422 - S617	R467410	R409843	R409844	N/A	N/A
1990	Fm		400mm x 120mm	1422 - S617	R467410	R409843	R409844	N/A	N/A
	Fm		400mm x 120mm	1422 - S617	R467410	R409843	R409844	N/A	N/A
1989	Fm		400mm x 120mm	1422 - S617	R467410	R409843	R409844	N/A	N/A

MERITOR DRUM OR ROTOR NO.	CALIPER OR CYLINDER BORE SIZE	MERITOR CALIPER OR WHEEL CYLINDER (LEFT)	MERITOR CALIPER OR WHEEL CYLINDER (RIGHT)	MERITOR CALIPER OR WHEEL CYLINDER REPAIR KIT	MERITOR CALIPER PISTON	MERITOR MASTER CYLINDER	MERITOR MASTER CYLINDER KIT	MERITOR BRAKE HOSE (LEFT)	MERITOR BRAKE HOSE (RIGHT)
HINO(Cont.)									
FD(Cont.)									
N/A		-	-	N/A	NR	-	-	-	-
N/A		-	-	N/A	NR	-	-	-	-
N/A		-	-	N/A	NR	-	-	-	-
N/A		-	-	N/A	NR	-	-	-	-
N/A		-	-	N/A	NR	-	-	-	-
N/A		-	-	N/A	NR	-	-	-	-
N/A		-	-	N/A	NR	-	-	-	-
N/A		-	-	N/A	NR	-	-	-	-
N/A		-	-	N/A	NR	-	-	-	-
N/A		-	-	N/A	NR	-	-	-	-
N/A		-	-	N/A	NR	-	-	-	-
N/A		-	-	N/A	NR	-	-	-	-
FD5H									
N/A		-	-	N/A	NR	-	-	-	-
N/A		-	-	N/A	NR	-	-	-	-
N/A		-	-	N/A	NR	-	-	-	-
N/A		-	-	N/A	NR	-	-	-	-
N/A		-	-	N/A	NR	-	-	-	-
N/A		-	-	N/A	NR	-	-	-	-
N/A		-	-	N/A	NR	-	-	-	-
N/A		-	-	N/A	NR	-	-	-	-
N/A		-	-	N/A	NR	-	-	-	-
N/A		-	-	N/A	NR	-	-	-	-
N/A		-	-	N/A	NR	-	-	-	-
N/A		-	-	N/A	NR	-	-	-	-
N/A		-	-	N/A	NR	-	-	-	-
N/A		-	-	N/A	NR	-	-	-	-
N/A		-	-	N/A	NR	-	-	-	-
N/A		-	-	N/A	NR	-	-	-	-
FE									
N/A N/A		- -	- -	N/A N/A	NR NR	- -	- -	- -	- -
N/A N/A		- -	- -	N/A N/A	NR NR	- -	- -	- -	- -
N/A N/A		- -	- -	N/A N/A	NR NR	- -	- -	- -	- -
N/A N/A		- -	- -	N/A N/A	NR NR	- -	- -	- -	- -
N/A N/A		- -	- -	N/A N/A	NR NR	- -	- -	- -	- -
N/A		-	-	N/A	NR	-	-	-	-

MAKE MODEL YEAR AXLE CODE AXLE WEIGHT	AXLE & BRK. TYPE	BRK. MFG.	BRAKE SIZE	FMSI	MERITOR DISC PAD OR BRAKE SHOE	MERITOR GUIDE PIN OR RETURN SPRING KIT	MERITOR CALIPER HWD. KIT OR RETURN SPRING KIT	MERITOR ADJUSTER KIT (LEFT WHEEL)	MERITOR ADJUSTER KIT (RIGHT WHEEL)
HINO(Cont.)									
FE(Cont.)									
1989	Fm		400mm x 120mm	1422 - S617	R467410	R409843	R409844	N/A	N/A
1987	Fm		400mm x 120mm	1422 - S617	R467410	R409843	R409844	N/A	N/A
	Fm		400mm x 120mm	1422 - S617	R467410	R409843	R409844	N/A	N/A
1986	Fm		400mm x 120mm	1422 - S617	R467410	R409843	R409844	N/A	N/A
	Fm		400mm x 120mm	1422 - S617	R467410	R409843	R409844	N/A	N/A
1985	Fm		400mm x 120mm	1422 - S617	R467410	R409843	R409844	N/A	N/A
	Fm		400mm x 120mm	1422 - S617	R467410	R409843	R409844	N/A	N/A
FE5H									
1994	Fm		400mm x 120mm	1422 - S617	R467410	R409843	R409844	N/A	N/A
1993	Fm		400mm x 120mm	1422 - S617	R467410	R409843	R409844	N/A	N/A
1992	Fm		400mm x 120mm	1422 - S617	R467410	R409843	R409844	N/A	N/A
1991	Fm		400mm x 120mm	1422 - S617	R467410	R409843	R409844	N/A	N/A
1990	Fm		400mm x 120mm	1422 - S617	R467410	R409843	R409844	N/A	N/A
1989	Fm		400mm x 120mm	1422 - S617	R467410	R409843	R409844	N/A	N/A
1987	Fm		400mm x 120mm	1422 - S617	R467410	R409843	R409844	N/A	N/A
1986	Fm		400mm x 120mm	1422 - S617	R467410	R409843	R409844	N/A	N/A
1985	Fm		400mm x 120mm	1422 - S617	R467410	R409843	R409844	N/A	N/A
FF4H									
1994	Fm		400mm x 120mm	1422 - S617	R467410	R409843	R409844	N/A	N/A
1993	Fm		400mm x 120mm	1422 - S617	R467410	R409843	R409844	N/A	N/A
1992	Fm		400mm x 120mm	1422 - S617	R467410	R409843	R409844	N/A	N/A
1991	Fm		400mm x 120mm	1422 - S617	R467410	R409843	R409844	N/A	N/A
1990	Fm		400mm x 120mm	1422 - S617	R467410	R409843	R409844	N/A	N/A
1989	Fm		400mm x 120mm	1422 - S617	R467410	R409843	R409844	N/A	N/A
1987	Fm		400mm x 120mm	1422 - S617	R467410	R409843	R409844	N/A	N/A
1986	Fm		400mm x 120mm	1422 - S617	R467410	R409843	R409844	N/A	N/A
1985	Fm		400mm x 120mm	1422 - S617	R467410	R409843	R409844	N/A	N/A
FF5H									
1994	Fm		400mm x 120mm	1422 - S617	R467410	R409843	R409844	N/A	N/A
1993	Fm		400mm x 120mm	1422 - S617	R467410	R409843	R409844	N/A	N/A
1992	Fm		400mm x 120mm	1422 - S617	R467410	R409843	R409844	N/A	N/A
1991	Fm		400mm x 120mm	1422 - S617	R467410	R409843	R409844	N/A	N/A
1990	Fm		400mm x 120mm	1422 - S617	R467410	R409843	R409844	N/A	N/A
1989	Fm		400mm x 120mm	1422 - S617	R467410	R409843	R409844	N/A	N/A
1987	Fm		400mm x 120mm	1422 - S617	R467410	R409843	R409844	N/A	N/A

MERITOR DRUM OR ROTOR NO.	CALIPER OR CYLINDER BORE SIZE	MERITOR CALIPER OR WHEEL CYLINDER (LEFT)	MERITOR CALIPER OR WHEEL CYLINDER (RIGHT)	MERITOR CALIPER OR WHEEL CYLINDER REPAIR KIT	MERITOR CALIPER PISTON	MERITOR MASTER CYLINDER	MERITOR MASTER CYLINDER KIT	MERITOR BRAKE HOSE (LEFT)	MERITOR BRAKE HOSE (RIGHT)
									HINO(Cont.)
									FE(Cont.)
N/A		-	-	N/A	NR	-	-	-	-
N/A		-	-	N/A	NR	-	-	-	-
N/A		-	-	N/A	NR	-	-	-	-
N/A		-	-	N/A	NR	-	-	-	-
N/A		-	-	N/A	NR	-	-	-	-
N/A		-	-	N/A	NR	-	-	-	-
									FE5H
N/A		-	-	N/A	NR	-	-	-	-
N/A		-	-	N/A	NR	-	-	-	-
N/A		-	-	N/A	NR	-	-	-	-
N/A		-	-	N/A	NR	-	-	-	-
N/A		-	-	N/A	NR	-	-	-	-
N/A		-	-	N/A	NR	-	-	-	-
N/A		-	-	N/A	NR	-	-	-	-
N/A		-	-	N/A	NR	-	-	-	-
N/A		-	-	N/A	NR	-	-	-	-
									FF4H
N/A		-	-	N/A	NR	-	-	-	-
N/A		-	-	N/A	NR	-	-	-	-
N/A		-	-	N/A	NR	-	-	-	-
N/A		-	-	N/A	NR	-	-	-	-
N/A		-	-	N/A	NR	-	-	-	-
N/A		-	-	N/A	NR	-	-	-	-
N/A		-	-	N/A	NR	-	-	-	-
N/A		-	-	N/A	NR	-	-	-	-
N/A		-	-	N/A	NR	-	-	-	-
									FF5H
N/A		-	-	N/A	NR	-	-	-	-
N/A		-	-	N/A	NR	-	-	-	-
N/A		-	-	N/A	NR	-	-	-	-
N/A		-	-	N/A	NR	-	-	-	-
N/A		-	-	N/A	NR	-	-	-	-
N/A		-	-	N/A	NR	-	-	-	-
N/A		-	-	N/A	NR	-	-	-	-

MAKE MODEL YEAR AXLE CODE AXLE WEIGHT	AXLE & BRK. TYPE	BRK. MFG.	BRAKE SIZE	FMSI	MERITOR DISC PAD OR BRAKE SHOE	MERITOR GUIDE PIN OR RETURN SPRING KIT	MERITOR CALIPER HWD. KIT OR RETURN SPRING KIT	MERITOR ADJUSTER KIT (LEFT WHEEL)	MERITOR ADJUSTER KIT (RIGHT WHEEL)
HINO(Cont.)									
FF5H(Cont.)									
1986	Fm		400mm x 120mm	1422 - S617	R467410	R409843	R409844	N/A	N/A
1985	Fm		400mm x 120mm	1422 - S617	R467410	R409843	R409844	N/A	N/A
FG									
1994	Fm		400mm x 120mm	1422 - S617	R467410	R409843	R409844	N/A	N/A
1993	Fm		400mm x 120mm	1422 - S617	R467410	R409843	R409844	N/A	N/A
1992	Fm		400mm x 120mm	1422 - S617	R467410	R409843	R409844	N/A	N/A
1991	Fm		400mm x 120mm	1422 - S617	R467410	R409843	R409844	N/A	N/A
1990	Fm		400mm x 120mm	1422 - S617	R467410	R409843	R409844	N/A	N/A
1989	Fm		400mm x 120mm	1422 - S617	R467410	R409843	R409844	N/A	N/A
1987	Fm		400mm x 120mm	1422 - S617	R467410	R409843	R409844	N/A	N/A
1986	Fm		400mm x 120mm	1422 - S617	R467410	R409843	R409844	N/A	N/A
1985	Fm		400mm x 120mm	1422 - S617	R467410	R409843	R409844	N/A	N/A
GC									
1994	Fm		320mm x 110mm	1469 - S684	R409862	R409849	R409850	N/A	N/A
	Rm		320mm x 125mm	1470 - S685	R409863	R409851	R409852	N/A	N/A
1993	Fm		320mm x 110mm	1469 - S684	R409862	R409849	R409850	N/A	N/A
	Rm		320mm x 125mm	1470 - S685	R409863	R409851	R409852	N/A	N/A
1992	Fm		320mm x 110mm	1469 - S684	R409862	R409849	R409850	N/A	N/A
	Rm		320mm x 125mm	1470 - S685	R409863	R409851	R409852	N/A	N/A
1991	Fm		320mm x 110mm	1469 - S684	R409862	R409849	R409850	N/A	N/A
	Rm		320mm x 125mm	1470 - S685	R409863	R409851	R409852	N/A	N/A
1990	Fm		320mm x 110mm	1469 - S684	R409862	R409849	R409850	N/A	N/A
	Rm		320mm x 125mm	1470 - S685	R409863	R409851	R409852	N/A	N/A
1989	Fm		320mm x 110mm	1469 - S684	R409862	R409849	R409850	N/A	N/A
	Rm		320mm x 125mm	1470 - S685	R409863	R409851	R409852	N/A	N/A
1987	Fm		320mm x 110mm	1469 - S684	R409862	R409849	R409850	N/A	N/A
	Rm		320mm x 125mm	1470 - S685	R409863	R409851	R409852	N/A	N/A
1986	Fm		320mm x 110mm	1469 - S684	R409862	R409849	R409850	N/A	N/A
	Rm		320mm x 125mm	1470 - S685	R409863	R409851	R409852	N/A	N/A
ISUZU									
FSR SERIES									
1995	Fm		400mm x 115mm	1421 - S616	R467412-21[343]	R407413	R407414	N/A	N/A
	Rm		410mm x 115mm	1420 - S615	R46741821[344]	R407417	N/A	N/A	N/A
	Rm		410mm x 115mm	1420 - S615	R46741821[344]	R407417	N/A	N/A	N/A
1994	Fm		400mm x 115mm	1421 - S616	R467412-21[343]	R407413	R407414	N/A	N/A
	Rm		410mm x 115mm	1420 - S615	R46741821[344]	R407417	N/A	N/A	N/A
	Rm		410mm x 115mm	1420 - S615	R46741821[344]	R407417	N/A	N/A	N/A
1993	Fm		400mm x 115mm	1421 - S616	R467412-21[343]	R407413	R407414	N/A	N/A
	Rm		410mm x 115mm	1420 - S615	R46741821[344]	R407417	N/A	N/A	N/A

307 - Power Brakes, Single System Hydrovac
329 - Forward
330 - Rearward
343 - Use E-7409 for Lining and Rivet Set
344 - Use E-7411 for Lining and Rivet Set

MERITOR DRUM OR ROTOR NO.	CALIPER OR CYLINDER BORE SIZE	MERITOR CALIPER OR WHEEL CYLINDER (LEFT)	MERITOR CALIPER OR WHEEL CYLINDER (RIGHT)	MERITOR CALIPER OR WHEEL CYLINDER REPAIR KIT	MERITOR CALIPER PISTON	MERITOR MASTER CYLINDER	MERITOR MASTER CYLINDER KIT	MERITOR BRAKE HOSE (LEFT)	MERITOR BRAKE HOSE (RIGHT)
HINO(Cont.)									
FF5H(Cont.)									
N/A		-	-	N/A	NR	-	-	-	-
N/A		-	-	N/A	NR	-	-	-	-
FG									
N/A		-	-	N/A	NR	-	-	-	-
N/A		-	-	N/A	NR	-	-	-	-
N/A		-	-	N/A	NR	-	-	-	-
N/A		-	-	N/A	NR	-	-	-	-
N/A		-	-	N/A	NR	-	-	-	-
N/A		-	-	N/A	NR	-	-	-	-
N/A		-	-	N/A	NR	-	-	-	-
N/A		-	-	N/A	NR	-	-	-	-
GC									
N/A		-	-	N/A	NR	-	-	-	-
N/A		-	-	N/A	NR	-	-	-	-
N/A		-	-	N/A	NR	-	-	-	-
N/A		-	-	N/A	NR	-	-	-	-
N/A		-	-	N/A	NR	-	-	-	-
N/A		-	-	N/A	NR	-	-	-	-
N/A		-	-	N/A	NR	-	-	-	-
N/A		-	-	N/A	NR	-	-	-	-
N/A		-	-	N/A	NR	-	-	-	-
N/A		-	-	N/A	NR	-	-	-	-
N/A		-	-	N/A	NR	-	-	-	-
N/A		-	-	N/A	NR	-	-	-	-
N/A		-	-	N/A	NR	-	-	-	-
N/A		-	-	N/A	NR	-	-	-	-
N/A		-	-	N/A	NR	-	-	-	-
N/A		-	-	N/A	NR	-	-	-	-
ISUZU									
FSR SERIES									
N/A	1-3/8 "	R417415	R417416	R417417	NR	R4110348[307]	R4110406	-	-
N/A	1-47/64 "	R417421	R417423[330]	R417424	NR	-	-	-	-
N/A	1-47/64 "	R417420	R417422[329]	R417424	NR	-	-	-	-
N/A	1-3/8 "	R417415	R417416	R417417	NR	R4110348[307]	R4110406	R451557	R451554
N/A	1-47/64 "	R417420	R417422[329]	R417424	NR	-	-	-	-
N/A	1-47/64 "	R417421	R417423[330]	R417424	NR	-	-	-	-
N/A	1-3/8 "	R417415	R417416	R417417	NR	R4110348[307]	R4110406	R451557	R451554
N/A	1-47/64 "	R417420	R417422[329]	R417424	NR	-	-	-	-

MAKE MODEL YEAR AXLE CODE AXLE WEIGHT	AXLE & BRK. TYPE	BRK. MFG.	BRAKE SIZE	FMSI	MERITOR DISC PAD OR BRAKE SHOE	MERITOR GUIDE PIN OR RETURN SPRING KIT	MERITOR CALIPER HWD. KIT OR RETURN SPRING KIT	MERITOR ADJUSTER KIT (LEFT WHEEL)	MERITOR ADJUSTER KIT (RIGHT WHEEL)
ISUZU(Cont.)									
FSR SERIES(Cont.)									
1993	Rm		410mm x 115mm	1420 - S615	R46741821[344]	R407417	N/A	N/A	N/A
1992	Fm		400mm x 115mm	1421 - S616	R467412-21[343]	R407413	R407414	N/A	N/A
	Rm		410mm x 115mm	1420 - S615	R46741821[344]	R407417	N/A	N/A	N/A
	Rm		410mm x 115mm	1420 - S615	R46741821[344]	R407417	N/A	N/A	N/A
1991	Fm		400mm x 115mm	1421 - S616	R467412-21[343]	R407413	R407414	N/A	N/A
	Rm		410mm x 115mm	1420 - S615	R46741821[344]	R407417	N/A	N/A	N/A
	Rm		410mm x 115mm	1420 - S615	R46741821[344]	R407417	N/A	N/A	N/A
1990	Fm		400mm x 115mm	1421 - S616	R467412-21[343]	R407413	R407414	N/A	N/A
	Rm		410mm x 115mm	1420 - S615	R46741821[344]	R407417	N/A	N/A	N/A
	Rm		410mm x 115mm	1420 - S615	R46741821[344]	R407417	N/A	N/A	N/A
1989	Fm		400mm x 115mm	1421 - S616	R467412-21[343]	R407413	R407414	N/A	N/A
	Rm		410mm x 115mm	1420 - S615	R46741821[344]	R407417	N/A	N/A	N/A
	Rm		410mm x 115mm	1420 - S615	R46741821[344]	R407417	N/A	N/A	N/A
1988	Fm		400mm x 115mm	1421 - S616	R467412-21[343]	R407413	R407414	N/A	N/A
	Rm		410mm x 115mm	1420 - S615	R46741821[344]	R407417	N/A	N/A	N/A
	Rm		410mm x 115mm	1420 - S615	R46741821[344]	R407417	N/A	N/A	N/A
1987	Fm		400mm x 115mm	1421 - S616	R467412-21[343]	R407413	R407414	N/A	N/A
	Rm		410mm x 115mm	1420 - S615	R46741821[344]	R407417	N/A	N/A	N/A
	Rm		410mm x 115mm	1420 - S615	R46741821[344]	R407417	N/A	N/A	N/A
FTR SERIES									
1995	Fm		410mm x 140mm	1418 - S613	R46613	R407394	R407396	NR	NR
	Rm		410mm x 140mm	1418 - S613	R46613	R407394	R407396	NR	NR
1994	Fm		410mm x 140mm	1418 - S613	R46613	R407394	R407396	NR	NR
	Rm		410mm x 140mm	1418 - S613	R46613	R407394	R407396	NR	NR
1993	Fm		410mm x 140mm	1418 - S613	R46613	R407394	R407396	NR	NR
	Rm		410mm x 140mm	1418 - S613	R46613	R407394	R407396	NR	NR
1992	Fm		410mm x 140mm	1418 - S613	R46613	R407394	R407396	NR	NR
	Rm		410mm x 140mm	1418 - S613	R46613	R407394	R407396	NR	NR
1991	Fm		410mm x 140mm	1418 - S613	R46613	R407394	R407396	NR	NR
	Rm		410mm x 140mm	1418 - S613	R46613	R407394	R407396	NR	NR
1990	Fm		410mm x 140mm	1418 - S613	R46613	R407394	R407396	NR	NR
	Rm		410mm x 140mm	1418 - S613	R46613	R407394	R407396	NR	NR
1989	Fm		410mm x 140mm	1418 - S613	R46613	R407394	R407396	NR	NR
	Rm		410mm x 140mm	1418 - S613	R46613	R407394	R407396	NR	NR
1988	Fm		410mm x 140mm	1418 - S613	R46613	R407394	R407396	NR	NR
	Rm		410mm x 140mm	1418 - S613	R46613	R407394	R407396	NR	NR
1987	Fm		410mm x 140mm	1418 - S613	R46613	R407394	R407396	NR	NR
	Rm		410mm x 140mm	1418 - S613	R46613	R407394	R407396	NR	NR
1986	Fm		410mm x 140mm	1418 - S613	R46613	R407394	R407396	NR	NR
	Rm		410mm x 140mm	1418 - S613	R46613	R407394	R407396	NR	NR
1985	Fm		410mm x 140mm	1418 - S613	R46613	R407394	R407396	NR	NR
	Rm		410mm x 140mm	1418 - S613	R46613	R407394	R407396	NR	NR
1984	Fm		410mm x 140mm	1418 - S613	R46613	R407394	R407396	NR	NR
	Rm		410mm x 140mm	1418 - S613	R46613	R407394	R407396	NR	NR

307 - Power Brakes, Single System Hydrovac
329 - Forward
330 - Rearward
343 - Use E-7409 for Lining and Rivet Set
344 - Use E-7411 for Lining and Rivet Set

MERITOR DRUM OR ROTOR NO.	CALIPER OR CYLINDER BORE SIZE	MERITOR CALIPER OR WHEEL CYLINDER (LEFT)	MERITOR CALIPER OR WHEEL CYLINDER (RIGHT)	MERITOR CALIPER OR WHEEL CYLINDER REPAIR KIT	MERITOR CALIPER PISTON	MERITOR MASTER CYLINDER	MERITOR MASTER CYLINDER KIT	MERITOR BRAKE HOSE (LEFT)	MERITOR BRAKE HOSE (RIGHT)
									ISUZU(Cont.)
									FSR SERIES(Cont.)
N/A	1-47/64 "	R417421	R417423[330]	R417424	NR	-	-	-	-
N/A	1-3/8 "	R417415	R417416	R417417	NR	R4110348[307]	R4110406	R451557	R451554
N/A	1-47/64 "	R417421	R417423[330]	R417424	NR	-	-	-	-
N/A	1-47/64 "	R417420	R417422[329]	R417424	NR	-	-	-	-
N/A	1-3/8 "	R417415	R417416	R417417	NR	R4110348[307]	R4110406	R451557	R451554
N/A	1-47/64 "	R417421	R417423[330]	R417424	NR	-	-	-	-
N/A	1-47/64 "	R417420	R417422[329]	R417424	NR	-	-	-	-
N/A	1-3/8 "	R417415	R417416	R417417	NR	R4110348[307]	R4110406	R451557	R451554
N/A	1-47/64 "	R417420	R417422[329]	R417424	NR	-	-	-	-
N/A	1-47/64 "	R417421	R417423[330]	R417424	NR	-	-	-	-
N/A	1-3/8 "	R417415	R417416	R417417	NR	R4110348[307]	R4110406	-	-
N/A	1-47/64 "	R417421	R417423[330]	R417424	NR	-	-	-	-
N/A	1-47/64 "	R417420	R417422[329]	R417424	NR	-	-	-	-
N/A	1-3/8 "	R417415	R417416	R417417	NR	R4110348[307]	R4110406	-	-
N/A	1-47/64 "	R417420	R417422[329]	R417424	NR	-	-	-	-
N/A	1-47/64 "	R417421	R417423[330]	R417424	NR	-	-	-	-
N/A	1-3/8 "	R417415	R417416	R417417	NR	R4110348[307]	R4110406	-	-
N/A	1-47/64 "	R417420	R417422[329]	R417424	NR	-	-	-	-
N/A	1-47/64 "	R417421	R417423[330]	R417424	NR	-	-	-	-
									FTR SERIES
N/A	47.5mm	R417398	R417397	R417399	NR	-	-	R451557	R451554
N/A	53.5mm	R417401	R417401	R417402	NR	-	-	N/A	N/A
N/A	47.5mm	R417398	R417397	R417399	NR	-	-	R451557	R451554
N/A	53.5mm	R417401	R417401	R417402	NR	-	-	N/A	N/A
N/A	47.5mm	R417398	R417397	R417399	NR	-	-	R451557	R451554
N/A	53.5mm	R417401	R417401	R417402	NR	-	-	N/A	N/A
N/A	47.5mm	R417398	R417397	R417399	NR	-	-	R451557	R451554
N/A	53.5mm	R417401	R417401	R417402	NR	-	-	N/A	N/A
N/A	47.5mm	R417398	R417397	R417399	NR	-	-	R451557	R451554
N/A	53.5mm	R417401	R417401	R417402	NR	-	-	N/A	N/A
N/A	47.5mm	R417398	R417397	R417399	NR	-	-	R451557	R451554
N/A	53.5mm	R417401	R417401	R417402	NR	-	-	N/A	N/A
N/A	47.5mm	R417398	R417397	R417399	NR	-	-	R451557	R451554
N/A	53.5mm	R417401	R417401	R417402	NR	-	-	N/A	N/A
N/A	47.5mm	R417398	R417397	R417399	NR	-	-	R451557	R451554
N/A	53.5mm	R417401	R417401	R417402	NR	-	-	N/A	N/A
N/A	47.5mm	R417398	R417397	R417399	NR	-	-	R451557	R451554
N/A	53.5mm	R417401	R417401	R417402	NR	-	-	N/A	N/A
N/A	47.5mm	R417398	R417397	R417399	NR	-	-	R451557	R451554
N/A	53.5mm	R417401	R417401	R417402	NR	-	-	N/A	N/A

MAKE MODEL YEAR AXLE CODE AXLE WEIGHT	AXLE & BRK. TYPE	BRK. MFG.	BRAKE SIZE	FMSI	MERITOR DISC PAD OR BRAKE SHOE	MERITOR GUIDE PIN OR RETURN SPRING KIT	MERITOR CALIPER HWD. KIT OR RETURN SPRING KIT	MERITOR ADJUSTER KIT (LEFT WHEEL)	MERITOR ADJUSTER KIT (RIGHT WHEEL)
ISUZU(Cont.)									
NPR SERIES									
2005 Diesel Engine 1-04 through 10,001 - 14,000 lbs GVWR Class 3 Vehicle	Fd	Isuzu		7699 - D827	MD827[368]	R4112503	-	N/A	N/A
Gasoline Engine 14,001 - 16,000 lbs GVWR Class 4 Vehicle	Fd	Isuzu		7699 - D827	MD827[369]	-	-	N/A	N/A
2004 Diesel Engine 1-04 through 10,001 - 14,000 lbs GVWR Class 3 Vehicle	Fd	Isuzu		7699 - D827	MD827[368]	R4112503	-	N/A	N/A
Gasoline Engine 7-03 through 6-04 14,001 - 16,000 lbs GVWR Class 4 Vehicle	Fd	Isuzu		7699 - D827	MD827[369]	R4112504	-	N/A	N/A
Gasoline Engine 7-04 Through 14,001 - 16,000 lbs GVWR Class 4 Vehicle	Fd	Isuzu		7699 - D827	MD827[369]	-	-	N/A	N/A
2003 Diesel Engine 1-03 through 11-03 10,001 - 14,000 lbs GVWR Class 3 Vehicle	Fd	Isuzu		7697 - D825	MD825[368]	R4112503	-	N/A	N/A
Diesel Engine 11-03 through 12-03 10,001 - 14,000 lbs GVWR Class 3 Vehicle	Fd	Isuzu		7697 - D825	MD825[368]	R4112503	-	N/A	N/A
Gasoline Engine 7-03 through 6-04 14,001 - 16,000 lbs GVWR Class 4 Vehicle	Fd	Isuzu		7699 - D827	MD827[369]	R4112504	-	N/A	N/A
Gasoline Engine 8-99 through 6-03 14,001 - 16,000 lbs GVWR Class 4 Vehicle	Fd	Isuzu		7699 - D827	MD827[369]	R4112504	-	N/A	N/A
2002 Diesel Engine 10,001 - 14,000 lbs GVWR Class 3 Vehicle	Fd	Isuzu		7697 - D825	MD825[368]	R4112503	-	N/A	N/A
Gasoline Engine 14,001 - 16,000 lbs GVWR Class 4 Vehicle	Fd	Isuzu		7699 - D827	MD827[369]	R4112504	-	N/A	N/A
2001 Diesel Engine 1-01 through 1-03 10,001 - 14,000 lbs GVWR Class 3 Vehicle	Fd	Isuzu		7697 - D825	MD825[369]	R4112503	-	N/A	N/A
Gasoline Engine 14,001 - 16,000 lbs GVWR Class 4 Vehicle	Fd	Isuzu		7699 - D827	MD827[369]	R4112504	-	N/A	N/A
2000 Diesel Engine 7-99 through 12-00 10,001 - 14,000 lbs GVWR Class 3 Vehicle	Fd	Isuzu		7697 - D825	MD825[369]	-	-	N/A	N/A
Gasoline Engine 14,001 - 16,000 lbs GVWR Class 4 Vehicle	Fd	Isuzu		7699 - D827	MD827[369]	R4112504	-	N/A	N/A
1999 Diesel Engine 1-98 Through 4-99 10,001 - 14,000 lbs GVWR Class 3 Vehicle	Fd	Isuzu		7697 - D825	MD825[369]	R4112503	-	N/A	N/A

368 - Isuzu # includes all clips

369 - Includes all clips

MERITOR DRUM OR ROTOR NO.	CALIPER OR CYLINDER BORE SIZE	MERITOR CALIPER OR WHEEL CYLINDER (LEFT)	MERITOR CALIPER OR WHEEL CYLINDER (RIGHT)	MERITOR CALIPER OR WHEEL CYLINDER REPAIR KIT	MERITOR CALIPER PISTON	MERITOR MASTER CYLINDER	MERITOR MASTER CYLINDER KIT	MERITOR BRAKE HOSE (LEFT)	MERITOR BRAKE HOSE (RIGHT)
ISUZU(Cont.)									
NPR SERIES									
-		R4212269	R4212270	R4012285	R4012281	-	-	-	-
R4421493R		R4212273	R4212274	R4012284	R4012280	-	-	-	-
-		R4212269	R4212270	R4012285	R4012281	-	-	-	-
R4421493R		R4212275	R4212276	R4012283	R4012279	-	-	-	-
R4421493R		R4212273	R4212274	R4012284	R4012280	-	-	-	-
-		R4212271X	R4212272X	R4012286	R4012282	-	-	-	-
-		R4212271X	R4212272X	R4012286	R4012282	-	-	-	-
R4421493R		R4212275	R4212276	R4012283	R4012279	-	-	-	-
-		R4212275	R4212276	R4012283	R4012279	-	-	-	-
-		R4212271X	R4212272X	R4012286	R4012282	-	-	-	-
-		R4212275	R4212276	R4012283	R4012279	-	-	-	-
-		R4212271X	R4212272X	R4012286	R4012282	-	-	-	-
-		R4212275	R4212276	R4012283	R4012279	-	-	-	-
-		-	-	-	-	-	-	-	-
-		R4212275	R4212276	R4012283	R4012279	-	-	-	-
-		R4212271X	R4212272X	R4012286	R4012282	-	-	-	-

MAKE MODEL YEAR AXLE CODE AXLE WEIGHT	AXLE & BRK. TYPE	BRK. MFG.	BRAKE SIZE	FMSI	MERITOR DISC PAD OR BRAKE SHOE	MERITOR GUIDE PIN OR RETURN SPRING KIT	MERITOR CALIPER HWD. KIT OR RETURN SPRING KIT	MERITOR ADJUSTER KIT (LEFT WHEEL)	MERITOR ADJUSTER KIT (RIGHT WHEEL)
ISUZU(Cont.)									
NPR SERIES(Cont.)									
1999	Fd	Isuzu		7697 - D825	MD825[369]	R4112503	-	N/A	N/A
Diesel Engine 7-99 through 12-00 10,001 - 14,000 lbs GVWR Class 3 Vehicle	Fd	Isuzu		7697 - D825	MD825[369]	-	-	N/A	N/A
Gasoline Engine 2-99 Through 6-99 Except 4 Wheel ABS 14,001 - 16,000 lbs GVWR Class 4 Vehicle	Fd	Isuzu		7698 - D826	MD826[369]	R4112504	-	N/A	N/A
Gasoline Engine 2-99 Through 6-99 With 4 Wheel ABS 14,001 - 16,000 lbs GVWR Class 4 Vehicle	Fd	Isuzu		7699 - D827	MD827[369]	R4112504	-	N/A	N/A
Gasoline Engine 7-99 Through 14,001 - 16,000 lbs GVWR Class 4 Vehicle	Fd	Isuzu		7699 - D827	MD827[369]	R4112504	-	N/A	N/A
1998 Diesel Engine 1-98 Through 4-99 10,001 - 14,000 lbs GVWR Class 3 Vehicle	Fd	Isuzu		7697 - D825	MD825[369]	R4112503	-	N/A	N/A
Gasoline Engine 10-97 Through 1-99 14,001 - 16,000 lbs GVWR Class 4 Vehicle	Fd	Isuzu		7698 - D826	MD826[369]	R4112503	-	N/A	N/A
1997 Diesel Engine 10,001 - 14,000 lbs GVWR Class 3 Vehicle	Fd	Isuzu			-	-	-	N/A	N/A
Gasoline Engine 14,001 - 16,000 lbs GVWR Class 4 Vehicle	Fd	Isuzu			-	-	-	N/A	N/A
	Fd			7425 - D675	MD675	N/A	N/A	NR	NR
	Fd			7425 - D675	MD675	N/A	N/A	NR	NR
	Fd			7425 - D675	MD675	N/A	N/A	NR	NR
	Fd			7425 - D675	MD675	N/A	N/A	NR	NR
1996									
	Fd			7425 - D675	MD675	N/A	N/A	NR	NR
	Fd			7425 - D675	MD675	N/A	N/A	NR	NR
	Fd			7425 - D675	MD675	N/A	N/A	NR	NR
	Fd			7425 - D675	MD675	N/A	N/A	NR	NR
1995									
	Fd			7425 - D546	MD675	N/A	R4166161	NR	NR
	Fd			7425 - D546	MD675	N/A	R4166161	NR	NR
	Fd			7425 - D546	MD675	N/A	R4166161	NR	NR
	Fd			7425 - D546	MD675	N/A	R4166161	NR	NR
	Fm				R46735721[342]	R41207361	R40H9238	NR	NR
	Fm				R46735721[342]	R41207361	R40H9238	N/A	N/A
	Fm				R46735721[342]	R41207361	R40H9238	NR	NR
	Fm				R46735721[342]	R41207361	R40H9238	NR	NR
	Fm				R46735721[342]	R41207361	R40H9238	N/A	N/A
	Fm				R46735721[342]	R41207361	R40H9238	N/A	N/A
	Fm				R46735721[342]	R41207361	R40H9238	NR	NR
	Fm				R46735721[342]	R41207361	R40H9238	N/A	N/A
	Fm		320mm x 75mm	1417 - S726	R46735721[342]	R41207361	R40H9238	NR	NR
	Fm		320mm x 75mm	1417 - S726	R46735721[342]	R41207361	R40H9238	NR	NR
	Fm		320mm x 75mm	1417 - S726	R46735721[342]	R41207361	R40H9238	NR	NR
	Fm		320mm x 75mm	1417 - S726	R46735721[342]	R41207361	R40H9238	N/A	N/A

53 - Power Brakes
54 - Manual Brakes
311 - Power Brakes, Stripped Chassis, Front Disc Brakes
329 - Forward
330 - Rearward
336 - Manual Brakes, Stripped Chassis, Front Disc Brakes
342 - Use E-7358 for Lining and Rivet Set
369 - Includes all clips
405 - Rotor Only

MERITOR DRUM OR ROTOR NO.	CALIPER OR CYLINDER BORE SIZE	MERITOR CALIPER OR WHEEL CYLINDER (LEFT)	MERITOR CALIPER OR WHEEL CYLINDER (RIGHT)	MERITOR CALIPER OR WHEEL CYLINDER REPAIR KIT	MERITOR CALIPER PISTON	MERITOR MASTER CYLINDER	MERITOR MASTER CYLINDER KIT	MERITOR BRAKE HOSE (LEFT)	MERITOR BRAKE HOSE (RIGHT)
									ISUZU(Cont.)
									NPR SERIES(Cont.)
-		R4212271X	R4212272X	R4012286	R4012282	-	-	-	-
-		-	-	-	-	-	-	-	-
-		R4212277X	R4212278X	R4012283	R4012279	-	-	-	-
-		R4212275	R4212276	R4012283	R4012279	-	-	-	-
-		R4212275	R4212276	R4012283	R4012279	-	-	-	-
-		R4212271X	R4212272X	R4012286	R4012282	-	-	-	-
-		R4212277X	R4212278X	R4012283	R4012279	-	-	-	-
-		-	-	-	-	-	-	-	-
-		-	-	-	-	-	-	-	-
R44141730[405]		-	-	R4066306	R4090126S	N/A[336]	N/A	R4578267	R4578267
R44141730[405]		-	-	R4066306	R4090126S	N/A[54]	N/A	R4578267	R4578267
R44141730[405]		-	-	R4066306	R4090126S	R4113182[311]	R4110409	R4578267	R4578267
R44141730[405]		-	-	R4066306	R4090126S	R4113123[53]	R4110409	R4578267	R4578267
R44141730[405]		-	-	R4066306	R4090126S	N/A[54]	N/A	R4578267	R4578267
R44141730[405]		-	-	R4066306	R4090126S	R4113182[311]	R4110409	R4578267	R4578267
R44141730[405]		-	-	R4066306	R4090126S	N/A[336]	N/A	R4578267	R4578267
R44141730[405]		-	-	R4066306	R4090126S	R4113123[53]	R4110409	R4578267	R4578267
R44141730[405]		-	-	R4066306	R4090126S	N/A[54]	N/A	R4578267	R4578267
R44141730[405]		-	-	R4066306	R4090126S	N/A[336]	N/A	R4578267	R4578267
R44141730[405]		-	-	R4066306	R4090126S	R4113123[53]	R4110409	R4578267	R4578267
R44141730[405]		-	-	R4066306	R4090126S	R4113182[311]	R4110409	R4578267	R4578267
N/A		R417379	R41207375	R417382	NR	N/A[54]	N/A	R4578267	R4578267
N/A		R41207364	R41207366[330]	R417382	NR	N/A[54]	N/A	R4578267	R4578267
N/A		R417379	R41207381	R417382	NR	N/A[336]	N/A	R4578267	R4578267
N/A		R417379	R41207375	R417382	NR	N/A[336]	N/A	R4578267	R4578267
N/A		R417363	R417365[329]	R417382	NR	N/A[54]	N/A	R4578267	R4578267
N/A		R417363	R417365[329]	R417382	NR	N/A[336]	N/A	R4578267	R4578267
N/A		R417379	R41207381	R417382	NR	N/A[54]	N/A	R4578267	R4578267
N/A		R41207364	R41207366[330]	R417382	NR	N/A[336]	N/A	R4578267	R4578267
N/A	1-1/16 "	R417379	R41207375	R417382	NR	R4113123[53]	R4110409	R4578267	R4578267
N/A	1-1/16 "	R417379	R41207375	R417382	NR	R4113182[311]	R4110409	R4578267	R4578267
N/A	1-1/16 "	R417379	R41207381	R417382	NR	R4113123[53]	R4110409	R4578267	R4578267
N/A	1-1/16 "	R41207364	R41207366[330]	R417382	NR	R4113123[53]	R4110409	R4578267	R4578267

MAKE MODEL YEAR AXLE CODE AXLE WEIGHT	AXLE & BRK. TYPE	BRK. MFG.	BRAKE SIZE	FMSI	MERITOR DISC PAD OR BRAKE SHOE	MERITOR GUIDE PIN OR RETURN SPRING KIT	MERITOR CALIPER HWD. KIT OR RETURN SPRING KIT	MERITOR ADJUSTER KIT (LEFT WHEEL)	MERITOR ADJUSTER KIT (RIGHT WHEEL)
ISUZU(Cont.)									
NPR SERIES(Cont.)									
1995									
	Fm		320mm x 75mm	1417 - S726	R46735721[342]	R41207361	R40H9238	N/A	N/A
	Fm		320mm x 75mm	1417 - S726	R46735721[342]	R41207361	R40H9238	N/A	N/A
	Fm		320mm x 75mm	1417 - S726	R46735721[342]	R41207361	R40H9238	N/A	N/A
	Fm		320mm x 75mm	1417 - S726	R46735721[342]	R41207361	R40H9238	NR	NR
	Ra		11-13/16"x2-61/64"	1454 - S668	N/A	N/A	N/A	N/A	N/A
	Rm		320mm x 100mm	1482 - S699	R46699	N/A	N/A	N/A	N/A
	Rm		320mm x 100mm	1482 - S699	R46699	N/A	N/A	N/A	N/A
	Rm		320mm x 75mm	1417 - S726	R46735721[342]	R41207361	R40H9238	N/A	N/A
	Rm		320mm x 75mm	1417 - S726	R46735721[342]	R41207361	R40H9238	N/A	N/A
	Rm		320mm x 75mm	1417 - S726	R46735721[342]	R41207361	R40H9238	N/A	N/A
	Rm		320mm x 75mm	1417 - S726	R46735721[342]	R41207361	R40H9238	N/A	N/A
1994									
	Fd			7425 - D546	MD675	N/A	N/A	NR	NR
	Fd			7425 - D546	MD675	N/A	N/A	NR	NR
	Fd			7425 - D546	MD675	N/A	N/A	NR	NR
	Fd			7425 - D546	MD675	N/A	N/A	NR	NR
	Fm				R46735721[342]	R41207361	R40H9238	N/A	N/A
	Fm				R46735721[342]	R41207361	R40H9238	NR	NR
	Fm				R46735721[342]	R41207361	R40H9238	NR	NR
	Fm				R46735721[342]	R41207361	R40H9238	N/A	N/A
	Fm				R46735721[342]	R41207361	R40H9238	N/A	N/A
	Fm				R46735721[342]	R41207361	R40H9238	NR	NR
	Fm				R46735721[342]	R41207361	R40H9238	NR	NR
	Fm				R46735721[342]	R41207361	R40H9238	N/A	N/A
	Fm		320mm x 75mm	1417 - S726	R46735721[342]	R41207361	R40H9238	N/A	N/A
	Fm		320mm x 75mm	1417 - S726	R46735721[342]	R41207361	R40H9238	NR	NR
	Fm		320mm x 75mm	1417 - S726	R46735721[342]	R41207361	R40H9238	NR	NR
	Fm		320mm x 75mm	1417 - S726	R46735721[342]	R41207361	R40H9238	N/A	N/A
	Fm		320mm x 75mm	1417 - S726	R46735721[342]	R41207361	R40H9238	NR	NR
	Fm		320mm x 75mm	1417 - S726	R46735721[342]	R41207361	R40H9238	N/A	N/A
	Fm		320mm x 75mm	1417 - S726	R46735721[342]	R41207361	R40H9238	NR	NR
	Fm		320mm x 75mm	1417 - S726	R46735721[342]	R41207361	R40H9238	N/A	N/A
	Ra		11-13/16"x2-61/64"	1454 - S668	N/A	N/A	N/A	N/A	N/A
	Rm		320mm x 100mm	1482 - S699	R46699	N/A	N/A	N/A	N/A
	Rm		320mm x 100mm	1482 - S699	R46699	N/A	N/A	N/A	N/A
	Rm		320mm x 75mm	1417 - S726	R46735721[342]	R41207361	R40H9238	N/A	N/A
	Rm		320mm x 75mm	1417 - S726	R46735721[342]	R41207361	R40H9238	N/A	N/A
With Front Disc Brakes	Rm		320mm x 75mm	1417 - S726	R46735721[342]	R41207361	R40H9238	N/A	N/A
	Rm		320mm x 75mm	1417 - S726	R46735721[342]	R41207361	R40H9238	N/A	N/A
1993									
	Fd			7425 - D546	MD675	N/A	N/A	NR	NR
	Fd			7425 - D546	MD675	N/A	N/A	NR	NR
	Fd			7425 - D546	MD675	N/A	N/A	NR	NR
	Fd			7425 - D546	MD675	N/A	N/A	NR	NR
	Fm				R46735721[342]	R41207361	R40H9238	N/A	N/A
	Fm				R46735721[342]	R41207361	R40H9238	N/A	N/A
	Fm				R46735721[342]	R41207361	R40H9238	NR	NR
	Fm				R46735721[342]	R41207361	R40H9238	N/A	N/A
	Fm				R46735721[342]	R41207361	R40H9238	NR	NR
	Fm				R46735721[342]	R41207361	R40H9238	NR	NR
	Fm				R46735721[342]	R41207361	R40H9238	NR	NR
	Fm				R46735721[342]	R41207361	R40H9238	N/A	N/A
	Fm		320mm x 75mm	1417 - S726	R46735721[342]	R41207361	R40H9238	N/A	N/A
	Fm		320mm x 75mm	1417 - S726	R46735721[342]	R41207361	R40H9238	N/A	N/A
	Fm		320mm x 75mm	1417 - S726	R46735721[342]	R41207361	R40H9238	NR	NR
	Fm		320mm x 75mm	1417 - S726	R46735721[342]	R41207361	R40H9238	NR	NR
	Fm		320mm x 75mm	1417 - S726	R46735721[342]	R41207361	R40H9238	N/A	N/A
	Fm		320mm x 75mm	1417 - S726	R46735721[342]	R41207361	R40H9238	NR	NR
	Fm		320mm x 75mm	1417 - S726	R46735721[342]	R41207361	R40H9238	NR	NR
	Fm		320mm x 75mm	1417 - S726	R46735721[342]	R41207361	R40H9238	N/A	N/A
	Ra		11-13/16"x2-61/64"	1454 - S668	N/A	N/A	N/A	N/A	N/A

53 - Power Brakes
329 - Forward
342 - Use E-7358 for Lining and Rivet Set
54 - Manual Brakes
330 - Rearward
405 - Rotor Only
311 - Power Brakes, Stripped Chassis, Front Disc Brakes
336 - Manual Brakes, Stripped Chassis, Front Disc Brakes

MERITOR DRUM OR ROTOR NO.	CALIPER OR CYLINDER BORE SIZE	MERITOR CALIPER OR WHEEL CYLINDER (LEFT)	MERITOR CALIPER OR WHEEL CYLINDER (RIGHT)	MERITOR CALIPER OR WHEEL CYLINDER REPAIR KIT	MERITOR CALIPER PISTON	MERITOR MASTER CYLINDER	MERITOR MASTER CYLINDER KIT	MERITOR BRAKE HOSE (LEFT)	MERITOR BRAKE HOSE (RIGHT)
									ISUZU(Cont.)
									NPR SERIES(Cont.)
N/A	1-1/16 "	R41207364	R41207366[330]	R417382	NR	R4113182[311]	R4110409	R4578267	R4578267
N/A	1-1/16 "	R417363	R417365[329]	R417382	NR	R4113182[311]	R4110409	R4578267	R4578267
N/A	1-1/16 "	R417363	R417365[329]	R417382	NR	R4113123[53]	R4110409	R4578267	R4578267
N/A	1-1/16 "	R417379	R41207381	R417382	NR	R4113182[311]	R4110409	R4578267	R4578267
N/A		-	-	-	NR	-	-	N/A	N/A
N/A	1 "	-	-	N/A	NR	-	-	N/A	N/A
N/A	1 "	-	-	N/A	NR	-	-	N/A	N/A
N/A	1-1/16 "	R417372	R41207375[329]	R417382	NR	-	-	N/A	N/A
N/A	1-1/16 "	R417379	R41207375	R417382	NR	-	-	N/A	N/A
N/A	1-1/16 "	R417372	R41207374[330]	R417382	NR	-	-	N/A	N/A
N/A	1-1/16 "	R417379	R41207381	R417382	NR	-	-	N/A	N/A
R44141730[405]		-	-	R4066306	R4090126S	R4113123[53]	R4110409	R4578267	R4578267
R44141730[405]		-	-	R4066306	R4090126S	N/A[336]	N/A	R4578267	R4578267
R44141730[405]		-	-	R4066306	R4090126S	N/A[54]	N/A	R4578267	R4578267
R44141730[405]		-	-	R4066306	R4090126S	R4113182[311]	R4110409	R4578267	R4578267
N/A		R417363	R417365[329]	R417382	NR	N/A[336]	N/A	R4578267	R4578267
N/A		R417379	R41207381	R417382	NR	N/A[54]	N/A	R4578267	R4578267
N/A		R417379	R41207375	R417382	NR	N/A[336]	N/A	R4578267	R4578267
N/A		R41207364	R41207366[330]	R417382	NR	N/A[54]	N/A	R4578267	R4578267
N/A		R417363	R417365[329]	R417382	NR	N/A[54]	N/A	R4578267	R4578267
N/A		R417379	R41207375	R417382	NR	N/A[54]	N/A	R4578267	R4578267
N/A		R417379	R41207381	R417382	NR	N/A[336]	N/A	R4578267	R4578267
N/A		R41207364	R41207366[330]	R417382	NR	N/A[336]	N/A	R4578267	R4578267
N/A	1-1/16 "	R417363	R417365[329]	R417382	NR	R4113123[53]	R4110409	R4578267	R4578267
N/A	1-1/16 "	R417379	R41207381	R417382	NR	R4113123[53]	R4110409	R4578267	R4578267
N/A	1-1/16 "	R417379	R41207375	R417382	NR	R4113123[53]	R4110409	R4578267	R4578267
N/A	1-1/16 "	R41207364	R41207366[330]	R417382	NR	R4113123[53]	R4110409	R4578267	R4578267
N/A	1-1/16 "	R417379	R41207381	R417382	NR	R4113182[311]	R4110409	R4578267	R4578267
N/A	1-1/16 "	R417363	R417365[329]	R417382	NR	R4113182[311]	R4110409	R4578267	R4578267
N/A	1-1/16 "	R417379	R41207375	R417382	NR	R4113182[311]	R4110409	R4578267	R4578267
N/A	1-1/16 "	R41207364	R41207366[330]	R417382	NR	R4113182[311]	R4110409	R4578267	R4578267
N/A		-	-	-	NR	-	-	-	-
N/A	1 "	-	-	N/A	NR	-	-	N/A	N/A
N/A	1 "	-	-	N/A	NR	-	-	N/A	N/A
N/A	1-1/16 "	R417372	R41207375[329]	R417382	NR	-	-	N/A	N/A
N/A	1-1/16 "	R417372	R41207374[330]	R417382	NR	-	-	N/A	N/A
N/A	1-1/16 "	R417379	R41207381	R417382	NR	-	-	N/A	N/A
N/A	1-1/16 "	R417379	R41207375	R417382	NR	-	-	N/A	-
R44141730[405]		-	-	R4066306	R4090126S	R4113182[311]	R4110409	R4578267	R4578267
R44141730[405]		-	-	R4066306	R4090126S	N/A[54]	N/A	R4578267	R4578267
R44141730[405]		-	-	R4066306	R4090126S	R4113123[53]	R4110409	R4578267	R4578267
R44141730[405]		-	-	R4066306	R4090126S	N/A[336]	N/A	R4578267	R4578267
N/A		R41207364	R41207366[330]	R417382	NR	N/A[54]	N/A	R4578267	R4578267
N/A		R41207364	R41207366[330]	R417382	NR	N/A[336]	N/A	R4578267	R4578267
N/A		R417379	R41207375	R417382	NR	N/A[336]	N/A	R4578267	R4578267
N/A		R417363	R417365[329]	R417382	NR	N/A[54]	N/A	R4578267	R4578267
N/A		R417379	R41207381	R417382	NR	N/A[54]	N/A	R4578267	R4578267
N/A		R417379	R41207381	R417382	NR	N/A[336]	N/A	R4578267	R4578267
N/A		R417379	R41207375	R417382	NR	N/A[54]	N/A	R4578267	R4578267
N/A		R417363	R417365[329]	R417382	NR	N/A[336]	N/A	R4578267	R4578267
N/A	1-1/16 "	R41207364	R41207366[330]	R417382	NR	R4113182[311]	R4110409	R4578267	R4578267
N/A	1-1/16 "	R417363	R417365[329]	R417382	NR	R4113123[53]	R4110409	R4578267	R4578267
N/A	1-1/16 "	R417379	R41207375	R417382	NR	R4113182[311]	R4110409	R4578267	R4578267
N/A	1-1/16 "	R417379	R41207381	R417382	NR	R4113182[311]	R4110409	R4578267	R4578267
N/A	1-1/16 "	R41207364	R41207366[330]	R417382	NR	R4113123[53]	R4110409	R4578267	R4578267
N/A	1-1/16 "	R417379	R41207375	R417382	NR	R4113123[53]	R4110409	R4578267	R4578267
N/A	1-1/16 "	R417379	R41207381	R417382	NR	R4113123[53]	R4110409	R4578267	R4578267
N/A	1-1/16 "	R417363	R417365[329]	R417382	NR	R4113182[311]	R4110409	R4578267	R4578267
N/A		-	-	-	NR	-	-	N/A	N/A

MAKE MODEL YEAR AXLE CODE AXLE WEIGHT	AXLE & BRK. TYPE	BRK. MFG.	BRAKE SIZE	FMSI	MERITOR DISC PAD OR BRAKE SHOE	MERITOR GUIDE PIN OR RETURN SPRING KIT	MERITOR CALIPER HWD. KIT OR RETURN SPRING KIT	MERITOR ADJUSTER KIT (LEFT WHEEL)	MERITOR ADJUSTER KIT (RIGHT WHEEL)
ISUZU(Cont.)									
NPR SERIES(Cont.)									
1993									
	Rm		320mm x 100mm	1482 - S699	R46699	N/A	N/A	N/A	N/A
	Rm		320mm x 100mm	1482 - S699	R46699	N/A	N/A	N/A	N/A
	Rm		320mm x 75mm	1417 - S726	R46735721[342]	R41207361	R40H9238	N/A	N/A
	Rm		320mm x 75mm	1417 - S726	R46735721[342]	R41207361	R40H9238	N/A	N/A
With Front Disc Brakes	Rm		320mm x 75mm	1417 - S726	R46735721[342]	R41207361	R40H9238	N/A	N/A
	Rm		320mm x 75mm	1417 - S726	R46735721[342]	R41207361	R40H9238	N/A	N/A
1992									
	Fd			7425 - D546	MD675	N/A	N/A	NR	NR
	Fd			7425 - D546	MD675	N/A	N/A	NR	NR
	Fd			7425 - D546	MD675	N/A	N/A	NR	NR
	Fd			7425 - D546	MD675	N/A	N/A	NR	NR
	Fm				R46735721[342]	R41207361	R40H9238	N/A	N/A
	Fm				R46735721[342]	R41207361	R40H9238	NR	NR
	Fm				R46735721[342]	R41207361	R40H9238	NR	NR
	Fm				R46735721[342]	R41207361	R40H9238	N/A	N/A
	Fm				R46735721[342]	R41207361	R40H9238	N/A	N/A
	Fm				R46735721[342]	R41207361	R40H9238	NR	NR
	Fm				R46735721[342]	R41207361	R40H9238	NR	NR
	Fm				R46735721[342]	R41207361	R40H9238	N/A	N/A
	Fm		320mm x 75mm	1417 - S726	R46735721[342]	R41207361	R40H9238	N/A	N/A
	Fm		320mm x 75mm	1417 - S726	R46735721[342]	R41207361	R40H9238	N/A	N/A
	Fm		320mm x 75mm	1417 - S726	R46735721[342]	R41207361	R40H9238	N/A	N/A
	Fm		320mm x 75mm	1417 - S726	R46735721[342]	R41207361	R40H9238	NR	NR
	Fm		320mm x 75mm	1417 - S726	R46735721[342]	R41207361	R40H9238	NR	NR
	Fm		320mm x 75mm	1417 - S726	R46735721[342]	R41207361	R40H9238	NR	NR
	Fm		320mm x 75mm	1417 - S726	R46735721[342]	R41207361	R40H9238	NR	NR
	Fm		320mm x 75mm	1417 - S726	R46735721[342]	R41207361	R40H9238	N/A	N/A
	Ra		11-13/16"x2-61/64"	1454 - S668	N/A	N/A	N/A	N/A	N/A
	Rm		320mm x 100mm	1482 - S699	R46699	N/A	N/A	N/A	N/A
	Rm		320mm x 100mm	1482 - S699	R46699	N/A	N/A	N/A	N/A
	Rm		320mm x 75mm	1417 - S726	R46735721[342]	R41207361	R40H9238	N/A	N/A
	Rm		320mm x 75mm	1417 - S726	R46735721[342]	R41207361	R40H9238	N/A	N/A
With Front Disc Brakes	Rm		320mm x 75mm	1417 - S726	R46735721[342]	R41207361	R40H9238	N/A	N/A
	Rm		320mm x 75mm	1417 - S726	R46735721[342]	R41207361	R40H9238	N/A	N/A
1991									
	Fd			7425 - D546	MD675	N/A	N/A	NR	NR
	Fd			7425 - D546	MD675	N/A	N/A	NR	NR
	Fd			7425 - D546	MD675	N/A	N/A	NR	NR
	Fd			7425 - D546	MD675	N/A	N/A	NR	NR
	Fm				R46735721[342]	R41207361	R40H9238	N/A	N/A
	Fm				R46735721[342]	R41207361	R40H9238	NR	NR
	Fm				R46735721[342]	R41207361	R40H9238	NR	NR
	Fm				R46735721[342]	R41207361	R40H9238	NR	NR
	Fm				R46735721[342]	R41207361	R40H9238	N/A	N/A
	Fm				R46735721[342]	R41207361	R40H9238	NR	NR
	Fm				R46735721[342]	R41207361	R40H9238	N/A	N/A
	Fm				R46735721[342]	R41207361	R40H9238	N/A	N/A
	Fm		320mm x 75mm	1417 - S726	R46735721[342]	R41207361	R40H9238	NR	NR
	Fm		320mm x 75mm	1417 - S726	R46735721[342]	R41207361	R40H9238	NR	NR
	Fm		320mm x 75mm	1417 - S726	R46735721[342]	R41207361	R40H9238	N/A	N/A
	Fm		320mm x 75mm	1417 - S726	R46735721[342]	R41207361	R40H9238	N/A	N/A
	Fm		320mm x 75mm	1417 - S726	R46735721[342]	R41207361	R40H9238	N/A	N/A
	Fm		320mm x 75mm	1417 - S726	R46735721[342]	R41207361	R40H9238	N/A	N/A
	Fm		320mm x 75mm	1417 - S726	R46735721[342]	R41207361	R40H9238	NR	NR
	Fm		320mm x 75mm	1417 - S726	R46735721[342]	R41207361	R40H9238	NR	NR
	Ra		11-13/16"x2-61/64"	1454 - S668	N/A	N/A	N/A	N/A	N/A
	Rm		320mm x 100mm	1482 - S699	R46699	N/A	N/A	N/A	N/A
	Rm		320mm x 100mm	1482 - S699	R46699	N/A	N/A	N/A	N/A
	Rm		320mm x 75mm	1417 - S726	R46735721[342]	R41207361	R40H9238	N/A	N/A
	Rm		320mm x 75mm	1417 - S726	R46735721[342]	R41207361	R40H9238	N/A	N/A
With Front Disc Brakes	Rm		320mm x 75mm	1417 - S726	R46735721[342]	R41207361	R40H9238	N/A	N/A
	Rm		320mm x 75mm	1417 - S726	R46735721[342]	R41207361	R40H9238	N/A	N/A

53 - Power Brakes
329 - Forward
342 - Use E-7358 for Lining and Rivet Set
54 - Manual Brakes
330 - Rearward
405 - Rotor Only
311 - Power Brakes, Stripped Chassis, Front Disc Brakes
336 - Manual Brakes, Stripped Chassis, Front Disc Brakes

MERITOR DRUM OR ROTOR NO.	CALIPER OR CYLINDER BORE SIZE	MERITOR CALIPER OR WHEEL CYLINDER (LEFT)	MERITOR CALIPER OR WHEEL CYLINDER (RIGHT)	MERITOR CALIPER OR WHEEL CYLINDER REPAIR KIT	MERITOR CALIPER PISTON	MERITOR MASTER CYLINDER	MERITOR MASTER CYLINDER KIT	MERITOR BRAKE HOSE (LEFT)	MERITOR BRAKE HOSE (RIGHT)
ISUZU(Cont.)									
NPR SERIES(Cont.)									
N/A	1 "	-	-	N/A	NR	-	-	N/A	N/A
N/A	1 "	-	-	N/A	NR	-	-	N/A	N/A
N/A	1-1/16 "	R417372	R41207374[330]	R417382	NR	-	-	N/A	N/A
N/A	1-1/16 "	R417372	R41207375[329]	R417382	NR	-	-	N/A	N/A
N/A	1-1/16 "	R417379	R41207375	R417382	NR	-	-	N/A	N/A
N/A	1-1/16 "	R417379	R41207381	R417382	NR	-	-	N/A	N/A
R44141730[405]		-	-	R4066306	R4090126S	R4113123[53]	R4110409	R4578267	R4578267
R44141730[405]		-	-	R4066306	R4090126S	N/A[336]	N/A	R4578267	R4578267
R44141730[405]		-	-	R4066306	R4090126S	N/A[54]	N/A	R4578267	R4578267
R44141730[405]		-	-	R4066306	R4090126S	R4113182[311]	R4110409	R4578267	R4578267
N/A		R417363	R417365[329]	R417382	NR	N/A[54]	N/A	R4578267	R4578267
N/A		R417379	R41207375	R417382	NR	N/A[336]	N/A	R4578267	R4578267
N/A		R417379	R41207381	R417382	NR	N/A[336]	N/A	R4578267	R4578267
N/A		R417363	R417365[329]	R417382	NR	N/A[336]	N/A	R4578267	R4578267
N/A		R41207364	R41207366[330]	R417382	NR	N/A[336]	N/A	R4578267	R4578267
N/A		R417379	R41207381	R417382	NR	N/A[54]	N/A	R4578267	R4578267
N/A		R417379	R41207375	R417382	NR	N/A[54]	N/A	R4578267	R4578267
N/A		R41207364	R41207366[330]	R417382	NR	N/A[54]	N/A	R4578267	R4578267
N/A	1-1/16 "	R417363	R417365[329]	R417382	NR	R4113182[311]	R4110409	R4578267	R4578267
N/A	1-1/16 "	R417363	R417365[329]	R417382	NR	R4113123[53]	R4110409	R4578267	R4578267
N/A	1-1/16 "	R41207364	R41207366[330]	R417382	NR	R4113182[311]	R4110409	R4578267	R4578267
N/A	1-1/16 "	R417379	R41207381	R417382	NR	R4113123[53]	R4110409	R4578267	R4578267
N/A	1-1/16 "	R417379	R41207375	R417382	NR	R4113182[311]	R4110409	R4578267	R4578267
N/A	1-1/16 "	R417379	R41207381	R417382	NR	R4113182[311]	R4110409	R4578267	R4578267
N/A	1-1/16 "	R417379	R41207375	R417382	NR	R4113123[53]	R4110409	R4578267	R4578267
N/A	1-1/16 "	R41207364	R41207366[330]	R417382	NR	R4113123[53]	R4110409	R4578267	R4578267
N/A		-	-	-	NR	-	-	N/A	N/A
N/A	1 "	-	-	N/A	NR	-	-	N/A	N/A
N/A	1 "	-	-	N/A	NR	-	-	N/A	N/A
N/A	1-1/16 "	R417372	R41207374[330]	R417382	NR	-	-	N/A	N/A
N/A	1-1/16 "	R417372	R41207375[329]	R417382	NR	-	-	N/A	N/A
N/A	1-1/16 "	R417379	R41207375	R417382	NR	-	-	N/A	N/A
N/A	1-1/16 "	R417379	R41207381	R417382	NR	-	-	N/A	N/A
R44141730[405]		-	-	R4066306	R4090126S	R4113123[53]	R4110409	R4578267	R4578267
R44141730[405]		-	-	R4066306	R4090126S	R4113182[311]	R4110409	R4578267	R4578267
R44141730[405]		-	-	R4066306	R4090126S	N/A[336]	N/A	R4578267	R4578267
R44141730[405]		-	-	R4066306	R4090126S	N/A[54]	N/A	R4578267	R4578267
N/A		R417363	R417365[329]	R417382	NR	N/A[336]	N/A	R4578267	R4578267
N/A		R417379	R41207381	R417382	NR	N/A[336]	N/A	R4578267	R4578267
N/A		R417379	R41207375	R417382	NR	N/A[54]	N/A	R4578267	R4578267
N/A		R417379	R41207381	R417382	NR	N/A[54]	N/A	R4578267	R4578267
N/A		R41207364	R41207366[330]	R417382	NR	N/A[336]	N/A	R4578267	R4578267
N/A		R417379	R41207375	R417382	NR	N/A[336]	N/A	R4578267	R4578267
N/A		R41207364	R41207366[330]	R417382	NR	N/A[54]	N/A	R4578267	R4578267
N/A		R417363	R417365[329]	R417382	NR	N/A[54]	N/A	R4578267	R4578267
N/A	1-1/16 "	R417379	R41207381	R417382	NR	R4113182[311]	R4110409	R4578267	R4578267
N/A	1-1/16 "	R417379	R41207375	R417382	NR	R4113123[53]	R4110409	R4578267	R4578267
N/A	1-1/16 "	R417363	R417365[329]	R417382	NR	R4113123[53]	R4110409	R4578267	R4578267
N/A	1-1/16 "	R417363	R417365[329]	R417382	NR	R4113182[311]	R4110409	R4578267	R4578267
N/A	1-1/16 "	R41207364	R41207366[330]	R417382	NR	R4113182[311]	R4110409	R4578267	R4578267
N/A	1-1/16 "	R41207364	R41207366[330]	R417382	NR	R4113123[53]	R4110409	R4578267	R4578267
N/A	1-1/16 "	R417379	R41207381	R417382	NR	R4113123[53]	R4110409	R4578267	R4578267
N/A	1-1/16 "	R417379	R41207375	R417382	NR	R4113182[311]	R4110409	R4578267	R4578267
N/A		-	-	-	NR	-	-	N/A	N/A
N/A	1 "	-	-	N/A	NR	-	-	N/A	N/A
N/A	1 "	-	-	N/A	NR	-	-	N/A	N/A
N/A	1-1/16 "	R417372	R41207374[330]	R417382	NR	-	-	N/A	N/A
N/A	1-1/16 "	R417372	R41207375[329]	R417382	NR	-	-	N/A	N/A
N/A	1-1/16 "	R417379	R41207375	R417382	NR	-	-	N/A	N/A
N/A	1-1/16 "	R417379	R41207381	R417382	NR	-	-	N/A	N/A

MAKE MODEL YEAR AXLE CODE AXLE WEIGHT	AXLE & BRK. TYPE	BRK. MFG.	BRAKE SIZE	FMSI	MERITOR DISC PAD OR BRAKE SHOE	MERITOR GUIDE PIN OR RETURN SPRING KIT	MERITOR CALIPER HWD. KIT OR RETURN SPRING KIT	MERITOR ADJUSTER KIT (LEFT WHEEL)	MERITOR ADJUSTER KIT (RIGHT WHEEL)
ISUZU(Cont.)									
NPR SERIES(Cont.)									
1990									
	Fd			7425 - D546	MD675	N/A	N/A	NR	NR
	Fd			7425 - D546	MD675	N/A	N/A	NR	NR
	Fd			7425 - D546	MD675	N/A	N/A	NR	NR
	Fd			7425 - D546	MD675	N/A	N/A	NR	NR
	Fm				R46735721[342]	R41207361	R40H9238	N/A	N/A
	Fm				R46735721[342]	R41207361	R40H9238	N/A	N/A
	Fm				R46735721[342]	R41207361	R40H9238	NR	NR
	Fm				R46735721[342]	R41207361	R40H9238	NR	NR
	Fm				R46735721[342]	R41207361	R40H9238	N/A	N/A
	Fm				R46735721[342]	R41207361	R40H9238	N/A	N/A
	Fm				R46735721[342]	R41207361	R40H9238	NR	NR
	Fm				R46735721[342]	R41207361	R40H9238	NR	NR
	Fm		320mm x 75mm	1417 - S726	R46735721[342]	R41207361	R40H9238	NR	NR
	Fm		320mm x 75mm	1417 - S726	R46735721[342]	R41207361	R40H9238	N/A	N/A
	Fm		320mm x 75mm	1417 - S726	R46735721[342]	R41207361	R40H9238	NR	NR
	Fm		320mm x 75mm	1417 - S726	R46735721[342]	R41207361	R40H9238	N/A	N/A
	Fm		320mm x 75mm	1417 - S726	R46735721[342]	R41207361	R40H9238	NR	NR
	Fm		320mm x 75mm	1417 - S726	R46735721[342]	R41207361	R40H9238	N/A	N/A
	Fm		320mm x 75mm	1417 - S726	R46735721[342]	R41207361	R40H9238	N/A	N/A
	Fm		320mm x 75mm	1417 - S726	R46735721[342]	R41207361	R40H9238	NR	NR
	Ra		11-13/16"x2-61/64"	1454 - S668	N/A	N/A	N/A	N/A	N/A
	Rm		320mm x 100mm	1482 - S699	R46699	N/A	N/A	N/A	N/A
	Rm		320mm x 100mm	1482 - S699	R46699	N/A	N/A	N/A	N/A
	Rm		320mm x 75mm	1417 - S726	R46735721[342]	R41207361	R40H9238	N/A	N/A
	Rm		320mm x 75mm	1417 - S726	R46735721[342]	R41207361	R40H9238	N/A	N/A
With Front Disc Brakes	Rm		320mm x 75mm	1417 - S726	R46735721[342]	R41207361	R40H9238	N/A	N/A
	Rm		320mm x 75mm	1417 - S726	R46735721[342]	R41207361	R40H9238	N/A	N/A
1989									
	Fd			7425 - D546	MD675	N/A	N/A	NR	NR
	Fd			7425 - D546	MD675	N/A	N/A	NR	NR
	Fd			7425 - D546	MD675	N/A	N/A	NR	NR
	Fd			7425 - D546	MD675	N/A	N/A	NR	NR
	Fm				R46735721[342]	R41207361	R40H9238	N/A	N/A
	Fm				R46735721[342]	R41207361	R40H9238	N/A	N/A
	Fm				R46735721[342]	R41207361	R40H9238	NR	NR
	Fm				R46735721[342]	R41207361	R40H9238	NR	NR
	Fm				R46735721[342]	R41207361	R40H9238	N/A	N/A
	Fm				R46735721[342]	R41207361	R40H9238	NR	NR
	Fm				R46735721[342]	R41207361	R40H9238	N/A	N/A
	Fm				R46735721[342]	R41207361	R40H9238	NR	NR
	Fm		320mm x 75mm	1417 - S726	R46735721[342]	R41207361	R40H9238	N/A	N/A
	Fm		320mm x 75mm	1417 - S726	R46735721[342]	R41207361	R40H9238	NR	NR
	Fm		320mm x 75mm	1417 - S726	R46735721[342]	R41207361	R40H9238	NR	NR
	Fm		320mm x 75mm	1417 - S726	R46735721[342]	R41207361	R40H9238	NR	NR
	Fm		320mm x 75mm	1417 - S726	R46735721[342]	R41207361	R40H9238	NR	NR
	Fm		320mm x 75mm	1417 - S726	R46735721[342]	R41207361	R40H9238	N/A	N/A
	Fm		320mm x 75mm	1417 - S726	R46735721[342]	R41207361	R40H9238	N/A	N/A
	Fm		320mm x 75mm	1417 - S726	R46735721[342]	R41207361	R40H9238	N/A	N/A
	Ra		11-13/16"x2-61/64"	1454 - S668	N/A	N/A	N/A	N/A	N/A
	Rm		320mm x 100mm	1482 - S699	R46699	N/A	N/A	N/A	N/A
	Rm		320mm x 100mm	1482 - S699	R46699	N/A	N/A	N/A	N/A
	Rm		320mm x 75mm	1417 - S726	R46735721[342]	R41207361	R40H9238	N/A	N/A
	Rm		320mm x 75mm	1417 - S726	R46735721[342]	R41207361	R40H9238	N/A	N/A
With Front Disc Brakes	Rm		320mm x 75mm	1417 - S726	R46735721[342]	R41207361	R40H9238	N/A	N/A
	Rm		320mm x 75mm	1417 - S726	R46735721[342]	R41207361	R40H9238	N/A	N/A
1988									
	Fd			7425 - D546	MD675	N/A	N/A	NR	NR
	Fd			7425 - D546	MD675	N/A	N/A	NR	NR
	Fd			7425 - D546	MD675	N/A	N/A	NR	NR
	Fd			7425 - D546	MD675	N/A	N/A	NR	NR
	Fm				R46735721[342]	R41207361	R40H9238	N/A	N/A
	Fm				R46735721[342]	R41207361	R40H9238	NR	NR

53 - Power Brakes
329 - Forward
342 - Use E-7358 for Lining and Rivet Set
54 - Manual Brakes
330 - Rearward
405 - Rotor Only
311 - Power Brakes, Stripped Chassis, Front Disc Brakes
336 - Manual Brakes, Stripped Chassis, Front Disc Brakes

MERITOR DRUM OR ROTOR NO.	CALIPER OR CYLINDER BORE SIZE	MERITOR CALIPER OR WHEEL CYLINDER (LEFT)	MERITOR CALIPER OR WHEEL CYLINDER (RIGHT)	MERITOR CALIPER OR WHEEL CYLINDER REPAIR KIT	MERITOR CALIPER PISTON	MERITOR MASTER CYLINDER	MERITOR MASTER CYLINDER KIT	MERITOR BRAKE HOSE (LEFT)	MERITOR BRAKE HOSE (RIGHT)
									ISUZU(Cont.)
									NPR SERIES(Cont.)
R44141730[405]		-	-	R4066306	R4090126S	R4113123[53]	R4110409	R4578267	R4578267
R44141730[405]		-	-	R4066306	R4090126S	R4113182[311]	R4110409	R4578267	R4578267
R44141730[405]		-	-	R4066306	R4090126S	N/A[336]	N/A	R4578267	R4578267
R44141730[405]		-	-	R4066306	R4090126S	N/A[54]	N/A	R4578267	R4578267
N/A		R417363	R417365[329]	R417382	NR	N/A[54]	N/A	R4578267	R4578267
N/A		R41207364	R41207366[330]	R417382	NR	N/A[54]	N/A	R4578267	R4578267
N/A		R417379	R41207375	R417382	NR	N/A[54]	N/A	R4578267	R4578267
N/A		R417379	R41207381	R417382	NR	N/A[336]	N/A	R4578267	R4578267
N/A		R41207364	R41207366[330]	R417382	NR	N/A[336]	N/A	R4578267	R4578267
N/A		R417363	R417365[329]	R417382	NR	N/A[336]	N/A	R4578267	R4578267
N/A		R417379	R41207381	R417382	NR	N/A[54]	N/A	R4578267	R4578267
N/A		R417379	R41207375	R417382	NR	N/A[336]	N/A	R4578267	R4578267
N/A	1-1/16 "	R417379	R41207375	R417382	NR	R4113182[311]	R4110409	R4578267	R4578267
N/A	1-1/16 "	R41207364	R41207366[330]	R417382	NR	R4113123[53]	R4110409	R4578267	R4578267
N/A	1-1/16 "	R417379	R41207381	R417382	NR	R4113123[53]	R4110409	R4578267	R4578267
N/A	1-1/16 "	R417363	R417365[329]	R417382	NR	R4113123[53]	R4110409	R4578267	R4578267
N/A	1-1/16 "	R417379	R41207381	R417382	NR	R4113182[311]	R4110409	R4578267	R4578267
N/A	1-1/16 "	R417363	R417365[329]	R417382	NR	R4113182[311]	R4110409	R4578267	R4578267
N/A	1-1/16 "	R41207364	R41207366[330]	R417382	NR	R4113182[311]	R4110409	R4578267	R4578267
N/A	1-1/16 "	R417379	R41207375	R417382	NR	R4113123[53]	R4110409	R4578267	R4578267
N/A		-	-	-	NR	-	-	N/A	N/A
N/A	1 "	-	-	N/A	NR	-	-	N/A	N/A
N/A	1 "	-	-	N/A	NR	-	-	N/A	N/A
N/A	1-1/16 "	R417372	R41207374[330]	R417382	NR	-	-	N/A	N/A
N/A	1-1/16 "	R417372	R41207375[329]	R417382	NR	-	-	N/A	N/A
N/A	1-1/16 "	R417379	R41207375	R417382	NR	-	-	N/A	N/A
N/A	1-1/16 "	R417379	R41207381	R417382	NR	-	-	N/A	N/A
R44141730[405]		-	-	R4066306	R4090126S	R4113182[311]	R4110409	R4578267	R4578267
R44141730[405]		-	-	R4066306	R4090126S	N/A[336]	N/A	R4578267	R4578267
R44141730[405]		-	-	R4066306	R4090126S	N/A[54]	N/A	R4578267	R4578267
R44141730[405]		-	-	R4066306	R4090126S	R4113123[53]	R4110409	R4578267	R4578267
N/A		R41207364	R41207366[330]	R417382	NR	N/A[336]	N/A	R4578267	R4578267
N/A		R41207364	R41207366[330]	R417382	NR	N/A[54]	N/A	R4578267	R4578267
N/A		R417379	R41207381	R417382	NR	N/A[336]	N/A	R4578267	R4578267
N/A		R417379	R41207375	R417382	NR	N/A[54]	N/A	R4578267	R4578267
N/A		R417363	R417365[329]	R417382	NR	N/A[54]	N/A	R4578267	R4578267
N/A		R417379	R41207375	R417382	NR	N/A[336]	N/A	R4578267	R4578267
N/A		R417363	R417365[329]	R417382	NR	N/A[336]	N/A	R4578267	R4578267
N/A		R417379	R41207381	R417382	NR	N/A[54]	N/A	R4578267	R4578267
N/A	1-1/16 "	R41207364	R41207366[330]	R417382	NR	R4113182[311]	R4110409	R4578267	R4578267
N/A	1-1/16 "	R417379	R41207375	R417382	NR	R4113123[53]	R4110409	R4578267	R4578267
N/A	1-1/16 "	R417379	R41207381	R417382	NR	R4113123[53]	R4110409	R4578267	R4578267
N/A	1-1/16 "	R417379	R41207375	R417382	NR	R4113182[311]	R4110409	R4578267	R4578267
N/A	1-1/16 "	R417379	R41207381	R417382	NR	R4113182[311]	R4110409	R4578267	R4578267
N/A	1-1/16 "	R417363	R417365[329]	R417382	NR	R4113182[311]	R4110409	R4578267	R4578267
N/A	1-1/16 "	R41207364	R41207366[330]	R417382	NR	R4113123[53]	R4110409	R4578267	R4578267
N/A	1-1/16 "	R417363	R417365[329]	R417382	NR	R4113123[53]	R4110409	R4578267	R4578267
N/A		-	-	-	NR	-	-	N/A	N/A
N/A	1 "	-	-	N/A	NR	-	-	N/A	N/A
N/A	1 "	-	-	N/A	NR	-	-	N/A	N/A
N/A	1-1/16 "	R417372	R41207375[329]	R417382	NR	-	-	N/A	N/A
N/A	1-1/16 "	R417372	R41207374[330]	R417382	NR	-	-	N/A	N/A
N/A	1-1/16 "	R417379	R41207381	R417382	NR	-	-	N/A	N/A
N/A	1-1/16 "	R417379	R41207375	R417382	NR	-	-	N/A	N/A
R44141730[405]		-	-	R4066306	R4090126S	N/A[336]	N/A	R4578267	R4578267
R44141730[405]		-	-	R4066306	R4090126S	N/A[54]	N/A	R4578267	R4578267
R44141730[405]		-	-	R4066306	R4090126S	R4113182[311]	R4110409	R4578267	R4578267
R44141730[405]		-	-	R4066306	R4090126S	R4113123[53]	R4110409	R4578267	R4578267
N/A		R417363	R417365[329]	R417382	NR	N/A[54]	N/A	R4578267	R4578267
N/A		R417379	R41207375	R417382	NR	N/A[336]	N/A	R4578267	R4578267

MAKE MODEL YEAR AXLE CODE AXLE WEIGHT	AXLE & BRK. TYPE	BRK. MFG.	BRAKE SIZE	FMSI	MERITOR DISC PAD OR BRAKE SHOE	MERITOR GUIDE PIN OR RETURN SPRING KIT	MERITOR CALIPER HWD. KIT OR RETURN SPRING KIT	MERITOR ADJUSTER KIT (LEFT WHEEL)	MERITOR ADJUSTER KIT (RIGHT WHEEL)
ISUZU(Cont.)									
NPR SERIES(Cont.)									
1988									
	Fm				R46735721[342]	R41207361	R40H9238	N/A	N/A
	Fm				R46735721[342]	R41207361	R40H9238	N/A	N/A
	Fm				R46735721[342]	R41207361	R40H9238	NR	NR
	Fm				R46735721[342]	R41207361	R40H9238	NR	NR
	Fm				R46735721[342]	R41207361	R40H9238	NR	NR
	Fm				R46735721[342]	R41207361	R40H9238	N/A	N/A
	Fm		320mm x 75mm	1417 - S726	R46735721[342]	R41207361	R40H9238	N/A	N/A
	Fm		320mm x 75mm	1417 - S726	R46735721[342]	R41207361	R40H9238	NR	NR
	Fm		320mm x 75mm	1417 - S726	R46735721[342]	R41207361	R40H9238	N/A	N/A
	Fm		320mm x 75mm	1417 - S726	R46735721[342]	R41207361	R40H9238	NR	NR
	Fm		320mm x 75mm	1417 - S726	R46735721[342]	R41207361	R40H9238	N/A	N/A
	Fm		320mm x 75mm	1417 - S726	R46735721[342]	R41207361	R40H9238	NR	NR
	Fm		320mm x 75mm	1417 - S726	R46735721[342]	R41207361	R40H9238	N/A	N/A
	Fm		320mm x 75mm	1417 - S726	R46735721[342]	R41207361	R40H9238	NR	NR
	Ra		11-13/16"x2-61/64"	1454 - S668	N/A	N/A	N/A	N/A	N/A
	Rm		320mm x 100mm	1482 - S699	R46699	N/A	N/A	N/A	N/A
	Rm		320mm x 100mm	1482 - S699	R46699	N/A	N/A	N/A	N/A
	Rm		320mm x 75mm	1417 - S726	R46735721[342]	R41207361	R40H9238	N/A	N/A
	Rm		320mm x 75mm	1417 - S726	R46735721[342]	R41207361	R40H9238	N/A	N/A
With Front Disc Brakes	Rm		320mm x 75mm	1417 - S726	R46735721[342]	R41207361	R40H9238	N/A	N/A
	Rm		320mm x 75mm	1417 - S726	R46735721[342]	R41207361	R40H9238	N/A	N/A
1987									
	Fd			7425 - D546	MD675	N/A	N/A	NR	NR
	Fd			7425 - D546	MD675	N/A	N/A	NR	NR
	Fd			7425 - D546	MD675	N/A	N/A	NR	NR
	Fd			7425 - D546	MD675	N/A	N/A	NR	NR
	Fm				R46735721[342]	R41207361	R40H9238	N/A	N/A
	Fm				R46735721[342]	R41207361	R40H9238	N/A	N/A
	Fm				R46735721[342]	R41207361	R40H9238	NR	NR
	Fm				R46735721[342]	R41207361	R40H9238	NR	NR
	Fm				R46735721[342]	R41207361	R40H9238	NR	NR
	Fm				R46735721[342]	R41207361	R40H9238	N/A	N/A
	Fm				R46735721[342]	R41207361	R40H9238	N/A	N/A
	Fm				R46735721[342]	R41207361	R40H9238	NR	NR
	Fm		320mm x 75mm	1417 - S726	R46735721[342]	R41207361	R40H9238	N/A	N/A
	Fm		320mm x 75mm	1417 - S726	R46735721[342]	R41207361	R40H9238	N/A	N/A
	Fm		320mm x 75mm	1417 - S726	R46735721[342]	R41207361	R40H9238	NR	NR
	Fm		320mm x 75mm	1417 - S726	R46735721[342]	R41207361	R40H9238	NR	NR
	Fm		320mm x 75mm	1417 - S726	R46735721[342]	R41207361	R40H9238	N/A	N/A
	Fm		320mm x 75mm	1417 - S726	R46735721[342]	R41207361	R40H9238	NR	NR
	Fm		320mm x 75mm	1417 - S726	R46735721[342]	R41207361	R40H9238	NR	NR
	Fm		320mm x 75mm	1417 - S726	R46735721[342]	R41207361	R40H9238	N/A	N/A
	Ra		11-13/16"x2-61/64"	1454 - S668	N/A	N/A	N/A	N/A	N/A
	Rm		320mm x 100mm	1482 - S699	R46699	N/A	N/A	N/A	N/A
	Rm		320mm x 100mm	1482 - S699	R46699	N/A	N/A	N/A	N/A
	Rm		320mm x 75mm	1417 - S726	R46735721[342]	R41207361	R40H9238	N/A	N/A
	Rm		320mm x 75mm	1417 - S726	R46735721[342]	R41207361	R40H9238	N/A	N/A
With Front Disc Brakes	Rm		320mm x 75mm	1417 - S726	R46735721[342]	R41207361	R40H9238	N/A	N/A
	Rm		320mm x 75mm	1417 - S726	R46735721[342]	R41207361	R40H9238	N/A	N/A
1986									
	Fm		320mm x 75mm	1416 - S612	R46612[342]	R41207361	R40H9238	N/A	N/A
	Fm		320mm x 75mm	1416 - S612	R46612[342]	R41207361	R40H9238	N/A	N/A
	Rm		320mm x 75mm	1416 - S612	R46612[342]	R41207361	R40H9238	N/A	N/A
	Rm		320mm x 75mm	1416 - S612	R46612[342]	R41207361	R40H9238	N/A	N/A
1985									
	Fm		320mm x 75mm	1416 - S612	R46612[342]	R41207361	R40H9238	N/A	N/A
	Fm		320mm x 75mm	1416 - S612	R46612[342]	R41207361	R40H9238	N/A	N/A
	Rm		320mm x 75mm	1416 - S612	R46612[342]	R41207361	R40H9238	N/A	N/A
	Rm		320mm x 75mm	1416 - S612	R46612[342]	R41207361	R40H9238	N/A	N/A
1984									
	Fm		320mm x 75mm	1416 - S612	R46612[342]	R41207361	R40H9238	N/A	N/A
	Fm		320mm x 75mm	1416 - S612	R46612[342]	R41207361	R40H9238	N/A	N/A

53 - Power Brakes
329 - Forward
342 - Use E-7358 for Lining and Rivet Set
54 - Manual Brakes
330 - Rearward
405 - Rotor Only
311 - Power Brakes, Stripped Chassis, Front Disc Brakes
336 - Manual Brakes, Stripped Chassis, Front Disc Brakes

MERITOR DRUM OR ROTOR NO.	CALIPER OR CYLINDER BORE SIZE	MERITOR CALIPER OR WHEEL CYLINDER (LEFT)	MERITOR CALIPER OR WHEEL CYLINDER (RIGHT)	MERITOR CALIPER OR WHEEL CYLINDER REPAIR KIT	MERITOR CALIPER PISTON	MERITOR MASTER CYLINDER	MERITOR MASTER CYLINDER KIT	MERITOR BRAKE HOSE (LEFT)	MERITOR BRAKE HOSE (RIGHT)
									ISUZU(Cont.)
									NPR SERIES(Cont.)
N/A		R41207364	R41207366[330]	R417382	NR	N/A[54]	N/A	R4578267	R4578267
N/A		R41207364	R41207366[330]	R417382	NR	N/A[336]	N/A	R4578267	R4578267
N/A		R417379	R41207381	R417382	NR	N/A[54]	N/A	R4578267	R4578267
N/A		R417379	R41207375	R417382	NR	N/A[54]	N/A	R4578267	R4578267
N/A		R417379	R41207381	R417382	NR	N/A[336]	N/A	R4578267	R4578267
N/A		R417363	R417365[329]	R417382	NR	N/A[336]	N/A	R4578267	R4578267
N/A	1-1/16 "	R417363	R417365[329]	R417382	NR	R4113123[53]	R4110409	R4578267	R4578267
N/A	1-1/16 "	R417379	R41207375	R417382	NR	R4113123[53]	R4110409	R4578267	R4578267
N/A	1-1/16 "	R41207364	R41207366[330]	R417382	NR	R4113123[53]	R4110409	R4578267	R4578267
N/A	1-1/16 "	R417379	R41207375	R417382	NR	R4113182[311]	R4110409	R4578267	R4578267
N/A	1-1/16 "	R417363	R417365[329]	R417382	NR	R4113182[311]	R4110409	R4578267	R4578267
N/A	1-1/16 "	R417379	R41207381	R417382	NR	R4113123[53]	R4110409	R4578267	R4578267
N/A	1-1/16 "	R41207364	R41207366[330]	R417382	NR	R4113182[311]	R4110409	R4578267	R4578267
N/A	1-1/16 "	R417379	R41207381	R417382	NR	R4113182[311]	R4110409	R4578267	R4578267
N/A		-	-	-	NR	-	-	N/A	N/A
N/A	1 "	-	-	N/A	NR	-	-	N/A	N/A
N/A	1 "	-	-	N/A	NR	-	-	N/A	N/A
N/A	1-1/16 "	R417372	R41207375[329]	R417382	NR	-	-	N/A	N/A
N/A	1-1/16 "	R417372	R41207374[330]	R417382	NR	-	-	N/A	N/A
N/A	1-1/16 "	R417379	R41207375	R417382	NR	-	-	N/A	N/A
N/A	1-1/16 "	R417379	R41207381	R417382	NR	-	-	N/A	N/A
R44141730[405]		-	-	R4066306	R4090126S	R4113182[311]	R4110409	R4578267	R4578267
R44141730[405]		-	-	R4066306	R4090126S	N/A[336]	N/A	R4578267	R4578267
R44141730[405]		-	-	R4066306	R4090126S	N/A[54]	N/A	R4578267	R4578267
R44141730[405]		-	-	R4066306	R4090126S	R4113123[53]	R4110409	R4578267	R4578267
N/A		R417363	R417365[329]	R417382	NR	N/A[54]	N/A	R4578267	R4578267
N/A		R41207364	R41207366[330]	R417382	NR	N/A[336]	N/A	R4578267	R4578267
N/A		R417379	R41207375	R417382	NR	N/A[54]	N/A	R4578267	R4578267
N/A		R417379	R41207381	R417382	NR	N/A[54]	N/A	R4578267	R4578267
N/A		R417379	R41207375	R417382	NR	N/A[336]	N/A	R4578267	R4578267
N/A		R41207364	R41207366[330]	R417382	NR	N/A[54]	N/A	R4578267	R4578267
N/A		R417363	R417365[329]	R417382	NR	N/A[336]	N/A	R4578267	R4578267
N/A		R417379	R41207381	R417382	NR	N/A[336]	N/A	R4578267	R4578267
N/A	1-1/16 "	R417363	R417365[329]	R417382	NR	R4113123[53]	R4110409	R4578267	R4578267
N/A	1-1/16 "	R41207364	R41207366[330]	R417382	NR	R4113182[311]	R4110409	R4578267	R4578267
N/A	1-1/16 "	R417379	R41207375	R417382	NR	R4113123[53]	R4110409	R4578267	R4578267
N/A	1-1/16 "	R417379	R41207381	R417382	NR	R4113182[311]	R4110409	R4578267	R4578267
N/A	1-1/16 "	R417363	R417365[329]	R417382	NR	R4113182[311]	R4110409	R4578267	R4578267
N/A	1-1/16 "	R417379	R41207381	R417382	NR	R4113123[53]	R4110409	R4578267	R4578267
N/A	1-1/16 "	R417379	R41207375	R417382	NR	R4113182[311]	R4110409	R4578267	R4578267
N/A	1-1/16 "	R41207364	R41207366[330]	R417382	NR	R4113123[53]	R4110409	R4578267	R4578267
N/A		-	-	-	NR	-	-	N/A	N/A
N/A	1 "	-	-	N/A	NR	-	-	N/A	N/A
N/A	1 "	-	-	N/A	NR	-	-	N/A	N/A
N/A	1-1/16 "	R417372	R41207375[329]	R417382	NR	-	-	N/A	N/A
N/A	1-1/16 "	R417372	R41207374[330]	R417382	NR	-	-	N/A	N/A
N/A	1-1/16 "	R417379	R41207375	R417382	NR	-	-	N/A	N/A
N/A	1-1/16 "	R417379	R41207381	R417382	NR	-	-	N/A	N/A
N/A	1-3/16 "	R417367	R417369	R417383	NR	-	-	-	-
N/A	1-3/16 "	R417368	R417370	R417383	NR	-	-	-	-
N/A	1-3/16 "	R417376	R417377[330]	R417383	NR	-	-	-	-
N/A	1-3/16 "	R417376	R417377[329]	R417383	NR	-	-	-	-
N/A	1-3/16 "	R417367	R417369	R417383	NR	-	-	-	-
N/A	1-3/16 "	R417368	R417370	R417383	NR	-	-	-	-
N/A	1-3/16 "	R417376	R417377[330]	R417383	NR	-	-	-	-
N/A	1-3/16 "	R417376	R417377[329]	R417383	NR	-	-	-	-
N/A	1-3/16 "	R417367	R417369	R417383	NR	-	-	-	-
N/A	1-3/16 "	R417368	R417370	R417383	NR	-	-	-	-

MAKE MODEL YEAR AXLE CODE AXLE WEIGHT	AXLE & BRK. TYPE	BRK. MFG.	BRAKE SIZE	FMSI	MERITOR DISC PAD OR BRAKE SHOE	MERITOR GUIDE PIN OR RETURN SPRING KIT	MERITOR CALIPER HWD. KIT OR RETURN SPRING KIT	MERITOR ADJUSTER KIT (LEFT WHEEL)	MERITOR ADJUSTER KIT (RIGHT WHEEL)
ISUZU(Cont.)									
NPR SERIES(Cont.)									
1984									
	Rm		320mm x 75mm	1416 - S612	R46612[342]	R41207361	R40H9238	N/A	N/A
	Rm		320mm x 75mm	1416 - S612	R46612[342]	R41207361	R40H9238	N/A	N/A
NQR SERIES									
2005 Gasoline Engine 7-04 through 10,001 - 14,000 lbs GVWR Class 3 Vehicle	Fd	Isuzu		7699 - D827	MD827[368]	R4112503	-	N/A	N/A
Diesel Engine 1-04 through 16,001 - 19,500 lbs GVWR Class 5 Vehicle	Fd			7699 - D827	MD827[369]	-	-	N/A	N/A
2004 Gasoline Engine 12-03 through 6-04 10,001 - 14,000 lbs GVWR Class 3 Vehicle	Fd	Isuzu		7697 - D825	MD825[368]	R4112503	-	N/A	N/A
Gasoline Engine 7-04 through 10,001 - 14,000 lbs GVWR Class 3 Vehicle	Fd	Isuzu		7699 - D827	MD827[368]	R4112503	-	N/A	N/A
Diesel Engine 1-04 through 16,001 - 19,500 lbs GVWR Class 5 Vehicle	Fd			7699 - D827	MD827[369]	-	-	N/A	N/A
2003 Gasoline Engine 7-03 through 11-03 10,001 - 14,000 lbs GVWR Class 3 Vehicle	Fd	Isuzu		7697 - D825	MD825[368]	R4112503	-	N/A	N/A
Gasoline Engine 7-03 through 6-04 10,001 - 14,000 lbs GVWR Class 3 Vehicle	Fd	Isuzu		7697 - D825	MD825[368]	R4112503	-	N/A	N/A
Diesel Engine 1-03 through 12-03 16,001 - 19,500 lbs GVWR Class 5 Vehicle	Fd	Isuzu		7699 - D827	MD827[369]	R4112504	-	N/A	N/A
2002 Gasoline Engine 10,001 - 14,000 lbs GVWR Class 3 Vehicle	Fd	Isuzu		7697 - D825	MD825[368]	R4112503	-	N/A	N/A
Diesel Engine 1-01 through 12-02 16,001 - 19,500 lbs GVWR Class 5 Vehicle	Fd	Isuzu		7699 - D827	MD827[369]	R4112504	-	N/A	N/A
2001 Gasoline Engine 10,001 - 14,000 lbs GVWR Class 3 Vehicle	Fd	Isuzu		7697 - D825	MD825[369]	R4112503	-	N/A	N/A
Diesel Engine 1-01 through 12-02 16,001 - 19,500 lbs GVWR Class 5 Vehicle	Fd	Isuzu		7699 - D827	MD827[369]	R4112504	-	N/A	N/A
2000 Gasoline Engine 10,001 - 14,000 lbs GVWR Class 3 Vehicle	Fd	Isuzu		7697 - D825	MD825[369]	R4112503	-	N/A	N/A
Diesel Engine 16,001 - 19,500 lbs GVWR Class 5 Vehicle	Fd	Isuzu		7699 - D827	MD827[369]	R4112504	-	N/A	N/A
1999 Gasoline Engine 10-97 through 5-99 10,001 - 14,000 lbs GVWR Class 3 Vehicle	Fd	Isuzu		7697 - D825	MD825[369]	R4112503	-	N/A	N/A

329 - Forward
330 - Rearward
342 - Use E-7358 for Lining and Rivet Set
368 - Isuzu # includes all clips
369 - Includes all clips

MERITOR DRUM OR ROTOR NO.	CALIPER OR CYLINDER BORE SIZE	MERITOR CALIPER OR WHEEL CYLINDER (LEFT)	MERITOR CALIPER OR WHEEL CYLINDER (RIGHT)	MERITOR CALIPER OR WHEEL CYLINDER REPAIR KIT	MERITOR CALIPER PISTON	MERITOR MASTER CYLINDER	MERITOR MASTER CYLINDER KIT	MERITOR BRAKE HOSE (LEFT)	MERITOR BRAKE HOSE (RIGHT)
									ISUZU(Cont.)
									NPR SERIES(Cont.)
N/A N/A	1-3/16 " 1-3/16 "	R417376 R417376	R417377[330] R417377[329]	R417383 R417383	NR NR	- -	- -	- -	- -
									NQR SERIES
-		R4212269	R4212270	R4012285	R4012281	-	-	-	-
R4421493R		R4212273	R4212274	R4012284	R4012280	-	-	-	-
-		R4212271X	R4212272X	R4012286	R4012282	-	-	-	-
-		R4212269	-	-	-	-	-	-	-
R4421493R		R4212273	R4212274	R4012284	R4012280	-	-	-	-
-		R4212271X	R4212272X	R4012286	R4012282	-	-	-	-
-		R4212271X	R4212272X	R4012286	R4012282	-	-	-	-
R4421493R		R4212275	R4212276	R4012283	R4012279	-	-	-	-
-		R4212271X	R4212272X	R4012286	R4012282	-	-	-	-
R4421493R		R4212275	R4212276	R4012283	R4012279	-	-	-	-
-		R4212271X	R4212272X	R4012286	R4012282	-	-	-	-
R4421493R		R4212275	R4212276	R4012283	R4012279	-	-	-	-
-		R4212271X	R4212272X	R4012286	R4012282	-	-	-	-
R4421493R		R4212275	R4212276	R4012283	R4012279	-	-	-	-
-		R4212271X	R4212272X	R4012286	R4012282	-	-	-	-

MAKE MODEL YEAR AXLE CODE AXLE WEIGHT	AXLE & BRK. TYPE	BRK. MFG.	BRAKE SIZE	FMSI	MERITOR DISC PAD OR BRAKE SHOE	MERITOR GUIDE PIN OR RETURN SPRING KIT	MERITOR CALIPER HWD. KIT OR RETURN SPRING KIT	MERITOR ADJUSTER KIT (LEFT WHEEL)	MERITOR ADJUSTER KIT (RIGHT WHEEL)
ISUZU(Cont.)									
NQR SERIES(Cont.)									
1999 Gasoline Engine 6-99 through 10,001 - 14,000 lbs GVWR Class 3 Vehicle	Fd	Isuzu		7697 - D825	MD825[369]	R4112503	-	N/A	N/A
Diesel Engine 16,001 - 19,500 lbs GVWR Class 5 Vehicle	Fd	Isuzu		7699 - D827	MD827[369]	R4112504	-	N/A	N/A
1998 Gasoline Engine 10-97 through 5-99 10,001 - 14,000 lbs GVWR Class 3 Vehicle	Fd	Isuzu		7697 - D825	MD825[369]	R4112503	-	N/A	N/A
Diesel Engine 16,001 - 19,500 lbs GVWR Class 5 Vehicle	Fd	Isuzu		7698 - D826	MD826[369]	R4112503	-	N/A	N/A
1997	Fd	Isuzu			-	-	-	N/A	N/A
NRR SERIES									
1995									
	Fa				R46672	R4011281	R4011262	N/A	N/A
	Fa		11-13/16"x2-61/64"	1454 - S668	N/A	N/A	N/A	N/A	N/A
	Fa		320mm x 110mm	1458 - S672	R46672	R4011281	R4011262	N/A	N/A
	Ra		12-19/32"x4-23/32"	1455 - S669	R469826	N/A	N/A	N/A	N/A
	Ra		12-19/32"x4-23/32"	1455 - S669	R469826	N/A	N/A	N/A	N/A
1994									
	Fa				R46672	R4011281	R4011262	N/A	N/A
	Fa		320mm x 110mm	1458 - S672	R46672	R4011281	R4011262	N/A	N/A
	Ra		12-19/32"x4-23/32"	1455 - S669	R469826	N/A	N/A	N/A	N/A
	Ra		12-19/32"x4-23/32"	1455 - S669	R469826	N/A	N/A	N/A	N/A
1993									
	Fa		320mm x 110mm	1458 - S672	R46672	R4011281	R4011262	N/A	N/A
	Ra		12-19/32"x4-23/32"	1455 - S669	R469826	N/A	N/A	N/A	N/A
	Ra		12-19/32"x4-23/32"	1455 - S669	R469826	N/A	N/A	N/A	N/A
1992									
	Fa		320mm x 110mm	1458 - S672	R46672	R4011281	R4011262	N/A	N/A
	Ra		12-19/32"x4-23/32"	1455 - S669	R469826	N/A	N/A	N/A	N/A
	Ra		12-19/32"x4-23/32"	1455 - S669	R469826	N/A	N/A	N/A	N/A
1991									
	Fa				R46672	R4011281	R4011262	N/A	N/A
	Fa		320mm x 110mm	1458 - S672	R46672	R4011281	R4011262	N/A	N/A
	Ra		12-19/32"x4-23/32"	1455 - S669	R469826	N/A	N/A	N/A	N/A
	Ra		12-19/32"x4-23/32"	1455 - S669	R469826	N/A	N/A	N/A	N/A
1990									
	Fa				R46672	R4011281	R4011262	N/A	N/A
	Fa		320mm x 110mm	1458 - S672	R46672	R4011281	R4011262	N/A	N/A
	Ra		12-19/32"x4-23/32"	1455 - S669	R469826	N/A	N/A	N/A	N/A
	Ra		12-19/32"x4-23/32"	1455 - S669	R469826	N/A	N/A	N/A	N/A
1989									
	Fa				R46672	R4011281	R4011262	N/A	N/A
	Fa		320mm x 110mm	1458 - S672	R46672	R4011281	R4011262	N/A	N/A

52 - 18" Length
54 - Manual Brakes
307 - Power Brakes, Single System Hydrovac
369 - Includes all clips

MERITOR DRUM OR ROTOR NO.	CALIPER OR CYLINDER BORE SIZE	MERITOR CALIPER OR WHEEL CYLINDER (LEFT)	MERITOR CALIPER OR WHEEL CYLINDER (RIGHT)	MERITOR CALIPER OR WHEEL CYLINDER REPAIR KIT	MERITOR CALIPER PISTON	MERITOR MASTER CYLINDER	MERITOR MASTER CYLINDER KIT	MERITOR BRAKE HOSE (LEFT)	MERITOR BRAKE HOSE (RIGHT)
									ISUZU(Cont.)
									NQR SERIES(Cont.)
-		R4212271X	R4212272X	R4012286	R4012282	-	-	-	-
R4421493R		R4212275	R4212276	R4012283	R4012279	-	-	-	-
-		R4212271X	R4212272X	R4012286	R4012282	-	-	-	-
-		R4212277X	R4212278X	R4012283	R4012279	-	-	-	-
-		-	-	-	-	-	-	-	-
									NRR SERIES
N/A N/A N/A	 1.4375	N/A - N/A	R4111282 - R4111282	R4111292 N/A R4111292	NR N/A NR	N/A[52] - R4110348[307]	N/A - R4110406	R4511249 - R4511249	R4511249 - R4511249
N/A N/A	1-1/2 " 1-1/2 "	R 4111284 R 4111286	R 4111283 R 4111285	R4111291 R4111291	NR NR	- -	- -	N/A N/A	N/A N/A
N/A N/A	 1.4375	N/A N/A	R4111282 R4111282	R4111292 R4111292	NR NR	N/A[52] R4110348[307]	N/A R4110406	R4511249 R4511249	R4511249 R4511249
N/A N/A	1-1/2 " 1-1/2 "	R 4111286 R 4111284	R 4111285 R 4111283	R4111291 R4111291	NR NR	- -	- -	N/A N/A	N/A N/A
N/A	1.4375	N/A	R4111282	R4111292	NR	R4110348[307]	R4110406	R4511249	R4511249
N/A N/A	1-1/2 " 1-1/2 "	R 4111284 R 4111286	R 4111283 R 4111285	R4111291 R4111291	NR NR	- -	- -	- -	- -
N/A	1.4375	N/A	R4111282	R4111292	NR	R4110348[307]	R4110406	R4511249	R4511249
N/A N/A	1-1/2 " 1-1/2 "	R 4111284 R 4111286	R 4111283 R 4111285	R4111291 R4111291	NR NR	- -	- -	- -	- -
N/A N/A	 1.4375	N/A N/A	R4111282 R4111282	R4111292 R4111292	NR NR	N/A[54] R4110348[307]	N/A R4110406	R4511249 R4511249	R4511249 R4511249
N/A N/A	1-1/2 " 1-1/2 "	R 4111284 R 4111286	R 4111283 R 4111285	R4111291 R4111291	NR NR	- -	- -	- -	- -
N/A N/A	 1.4375	N/A N/A	R4111282 R4111282	R4111292 R4111292	NR NR	N/A[54] R4110348[307]	N/A R4110406	R4511249 R4511249	R4511249 R4511249
N/A N/A	1-1/2 " 1-1/2 "	R 4111284 R 4111286	R 4111283 R 4111285	R4111291 R4111291	NR NR	- -	- -	- -	- -
N/A N/A	 1.4375	N/A N/A	R4111282 R4111282	R4111292 R4111292	NR NR	N/A[54] R4110348[307]	N/A R4110406	R4511249 R4511249	R4511249 R4511249

MAKE MODEL YEAR AXLE CODE AXLE WEIGHT	AXLE & BRK. TYPE	BRK. MFG.	BRAKE SIZE	FMSI	MERITOR DISC PAD OR BRAKE SHOE	MERITOR GUIDE PIN OR RETURN SPRING KIT	MERITOR CALIPER HWD. KIT OR RETURN SPRING KIT	MERITOR ADJUSTER KIT (LEFT WHEEL)	MERITOR ADJUSTER KIT (RIGHT WHEEL)
ISUZU(Cont.)									
NRR SERIES(Cont.)									
1989									
	Ra		12-19/32"x4-23/32"	1455 - S669	R469826	N/A	N/A	N/A	N/A
	Ra		12-19/32"x4-23/32"	1455 - S669	R469826	N/A	N/A	N/A	N/A
1988									
	Fa				R46672	R4011281	R4011262	N/A	N/A
	Fa		320mm x 110mm	1458 - S672	R46672	R4011281	R4011262	N/A	N/A
	Ra		12-19/32"x4-23/32"	1455 - S669	R469826	N/A	N/A	N/A	N/A
	Ra		12-19/32"x4-23/32"	1455 - S669	R469826	N/A	N/A	N/A	N/A
ITE									
1000 SERIES									
2005 1652 SC I-60SG 6,000 lb	Fd	Bosch		7654 - D786	-	R4011754	NR	NR	NR
1652 SC I-80S 8,000 lb	Fd	Bosch		7654 - D786	-	R4011754	NR	NR	NR
1652 SC I-100S 9,000 lb	Fd	Bosch		7654 - D786	-	R4011754	NR	NR	NR
1652 SC Spicer S135-S 13,500 lb	Rd	Bosch		7654 - D786	-	R4011754	NR	NR	NR
1652 SC Spicer S150-S 15,500 lb	Rd	Bosch		7654 - D786	-	R4011754	NR	NR	NR
1652 SC 17060S 17500 lb	Rd	Bosch		7654 - D786	-	R4011754	NR	NR	NR
1652 SC 19060S 19,000 lb	Rd	Bosch		7654 - D786	-	R4011754	NR	NR	NR
140, 1400, 1452, 1454 SERIES									
1993 M1400, M1452, M1454 Metro Series, Forward Control	Fd	BX		7108 - D184	MD184	R40H5010	R40H5519	NR	NR
	Fd	BX		7108 - D184	MD184	R40H5010	R40H5519	NR	NR
	Fd	BX		7142 - D225	MD225	R40H5010	R40H5522	NR	NR
	Fd	BX		7108 - D184	MD184	R40H5010	R40H5519	NR	NR
	Fd	BX		7108 - D184	MD184	R40H5010	R40H5519	NR	NR
	Fd	BX		7142 - D225	MD225	R40H5010	R40H5522	NR	NR
	Rd	BX		7142 - D225	MD225	R40H5010	R40H5522	NR	NR
	Rd	BX		7108 - D184	MD184	R40H5010	R40H5519	NR	NR
	Rd	BX		7108 - D184	MD184	R40H5010	R40H5519	NR	NR
1992									
	Fd	BX		7108 - D184	MD184	R40H5010	R40H5519	NR	NR
	Fd	BX		7142 - D225	MD225	R40H5010	R40H5522	NR	NR
	Fd	BX		7108 - D184	MD184	R40H5010	R40H5519	NR	NR
	Fd	BX		7108 - D184	MD184	R40H5010	R40H5519	NR	NR
	Fd	BX		7108 - D184	MD184	R40H5010	R40H5519	NR	NR
	Fd	BX		7142 - D225	MD225	R40H5010	R40H5522	NR	NR
	Fd	BX		7108 - D184	MD184	R40H5010	R40H5519	NR	NR
	Fd	BX		7108 - D184	MD184	R40H5010	R40H5519	NR	NR
	Fd	BX		7142 - D225	MD225	R40H5010	R40H5522	NR	NR
	Rd	BX		7142 - D225	MD225	R40H5010	R40H5522	NR	NR
	Rd	BX		7142 - D225	MD225	R40H5010	R40H5522	NR	NR
	Rd	BX		7108 - D184	MD184	R40H5010	R40H5519	NR	NR
	Rd	BX		7108 - D184	MD184	R40H5010	R40H5519	NR	NR

37 - Also available as a New unit
201 - Steel Piston
271 - 6 Stud, Hat Shape
54 - Manual Brakes
266 - 10 Stud, Hat Shaped
307 - Power Brakes, Single System Hydrovac
72 - Phenolic/Steel Face
268 - 5 Stud, Hat Shape
365 - Caliper Loaded with Hardware and Disc Pads

MERITOR DRUM OR ROTOR NO.	CALIPER OR CYLINDER BORE SIZE	MERITOR CALIPER OR WHEEL CYLINDER (LEFT)	MERITOR CALIPER OR WHEEL CYLINDER (RIGHT)	MERITOR CALIPER OR WHEEL CYLINDER REPAIR KIT	MERITOR CALIPER PISTON	MERITOR MASTER CYLINDER	MERITOR MASTER CYLINDER KIT	MERITOR BRAKE HOSE (LEFT)	MERITOR BRAKE HOSE (RIGHT)
ISUZU(Cont.)									
NRR SERIES(Cont.)									
N/A	1-1/2 "	R 4111284	R 4111283	R4111291	NR	-	-	-	-
N/A	1-1/2 "	R 4111286	R 4111285	R4111291	NR	-	-	-	-
N/A		N/A	R4111282	R4111292	NR	N/A[54]	N/A	R4511249	R4511249
N/A	1.4375	N/A	R4111282	R4111292	NR	R4110348[307]	R4110406	R4511249	R4511249
N/A	1-1/2 "	R 4111284	R 4111283	R4111291	NR	-	-	-	-
N/A	1-1/2 "	R 4111286	R 4111285	R4111291	NR	-	-	-	-
ITE									
1000 SERIES									
23-123550-004[387]	66mm	R424153263	R424153263[365]	R4011752	R4011751	-	-	-	-
23-123550-004[387]	66mm	R424153263	R424153263[365]	R4011752	R4011751	-	-	-	-
23-123550-004[387]	66mm	R424153263	R424153263[365]	R4011752	R4011751	-	-	-	-
23-123550-004[387]	66mm	R424153263	R424153263[365]	R4011752	R4011751	-	-	-	-
23-123550-004[387]	66mm	R424153263	R424153263[365]	R4011752	R4011751	-	-	-	-
23-123550-004[387]	66mm	R424153263	R424153263[365]	R4011752	R4011751	-	-	-	-
23-123550-004[387]	66mm	R424153263	R424153263[365]	R4011752	R4011751	-	-	-	-
140, 1400, 1452, 1454 SERIES									
R44141476[268]	2-19/32 "	R42R55314	R42R55314[37]	R40107771	R4090100P[72]	-	-	-	-
R44141476[268]	3-3/8 "	R42R55099	R42R55098[37]	R4066780	R4090021[201]	-	-	-	-
R44141476[268]	2-7/8 "	R42R55250	R42R55250[37]	R4066365	R4090096[72]	-	-	-	-
23-123552-004[266]	3-3/8 "	R42R55099	R42R55098[37]	R4066780	R4090021[201]	-	-	-	-
23-123572-004[271]	3-3/8 "	R42R55099	R42R55098[37]	R4066780	R4090021[201]	-	-	-	-
23-123572-004[271]	2-7/8 "	R42R55250	R42R55250[37]	R4066365	R4090096[72]	-	-	-	-
23-123552-004[266]	2-7/8 "	R42R55250	R42R55250[37]	R4066365	R4090096[72]	-	-	R4577512	R4577512
23-123552-004[266]	2-19/32 "	R42R55314	R42R55314[37]	R40107771	R4090100P[72]	-	-	R4577512	R4577512
23-123572-004[271]	2-19/32 "	R42R55314	R42R55314[37]	R40107771	R4090100P[72]	-	-	R4577512	R4577512
23-123572-004[271]	2-19/32 "	R42R55314	R42R55314[37]	R40107771	R4090100P[72]	-	-	-	-
23-123572-004[271]	2-7/8 "	R42R55250	R42R55250[37]	R4066365	R4090096[72]	-	-	-	-
23-123572-004[271]	3-3/8 "	R42R55099	R42R55098[37]	R4066780	R4090021[201]	-	-	-	-
23-123552-004[266]	2-19/32 "	R42R55314	R42R55314[37]	R40107771	R4090100P[72]	-	-	-	-
R44141476[268]	2-19/32 "	R42R55314	R42R55314[37]	R40107771	R4090100P[72]	-	-	-	-
R44141476[268]	2-7/8 "	R42R55250	R42R55250[37]	R4066365	R4090096[72]	-	-	-	-
R44141476[268]	3-3/8 "	R42R55099	R42R55098[37]	R4066780	R4090021[201]	-	-	-	-
23-123552-004[266]	3-3/8 "	R42R55099	R42R55098[37]	R4066780	R4090021[201]	-	-	-	-
23-123552-004[266]	2-7/8 "	R42R55250	R42R55250[37]	R4066365	R4090096[72]	-	-	-	-
23-123552-004[266]	2-7/8 "	R42R55250	R42R55250[37]	R4066365	R4090096[72]	-	-	R4577512	R4577512
23-123572-004[271]	2-7/8 "	R42R55250	R42R55250[37]	R4066365	R4090096[72]	-	-	R4577512	R4577512
23-123552-004[266]	2-19/32 "	R42R55314	R42R55314[37]	R40107771	R4090100P[72]	-	-	R4577512	R4577512
23-123572-004[271]	2-19/32 "	R42R55314	R42R55314[37]	R40107771	R4090100P[72]	-	-	R4577512	R4577512

387 - 10 Hole Rotor

MAKE MODEL YEAR AXLE CODE AXLE WEIGHT	AXLE & BRK. TYPE	BRK. MFG.	BRAKE SIZE	FMSI	MERITOR DISC PAD OR BRAKE SHOE	MERITOR GUIDE PIN OR RETURN SPRING KIT	MERITOR CALIPER HWD. KIT OR RETURN SPRING KIT	MERITOR ADJUSTER KIT (LEFT WHEEL)	MERITOR ADJUSTER KIT (RIGHT WHEEL)
ITE(Cont.)									
140, 1400, 1452, 1454 SERIES(Cont.)									
1991									
	Fd	BX		7142 - D225	MD225	R40H5010	R40H5522	NR	NR
	Fd	BX		7142 - D225	MD225	R40H5010	R40H5522	NR	NR
	Fd	BX		7108 - D184	MD184	R40H5010	R40H5519	NR	NR
	Fd	BX		7108 - D184	MD184	R40H5010	R40H5519	NR	NR
	Fd	BX		7108 - D184	MD184	R40H5010	R40H5519	NR	NR
	Fd	BX		7108 - D184	MD184	R40H5010	R40H5519	NR	NR
	Fd	BX		7108 - D184	MD184	R40H5010	R40H5519	NR	NR
	Fd	BX		7142 - D225	MD225	R40H5010	R40H5522	NR	NR
	Fd	BX		7108 - D184	MD184	R40H5010	R40H5519	NR	NR
	Rd	BX		7142 - D225	MD225	R40H5010	R40H5522	NR	NR
	Rd	BX		7142 - D225	MD225	R40H5010	R40H5522	NR	NR
	Rd	BX		7108 - D184	MD184	R40H5010	R40H5519	NR	NR
	Rd	BX		7108 - D184	MD184	R40H5010	R40H5519	NR	NR
1990									
	Fd	BX		7108 - D184	MD184	R40H5010	R40H5519	NR	NR
	Fd	BX		7142 - D225	MD225	R40H5010	R40H5522	NR	NR
	Fd	BX		7108 - D184	MD184	R40H5010	R40H5519	NR	NR
	Fd	BX		7108 - D184	MD184	R40H5010	R40H5519	NR	NR
	Fd	BX		7142 - D225	MD225	R40H5010	R40H5522	NR	NR
	Fd	BX		7142 - D225	MD225	R40H5010	R40H5522	NR	NR
	Fd	BX		7108 - D184	MD184	R40H5010	R40H5519	NR	NR
	Fd	BX		7142 - D225	MD225	R40H5010	R40H5522	NR	NR
	Fd	BX		7108 - D184	MD184	R40H5010	R40H5519	NR	NR
	Fd	BX		7108 - D184	MD184	R40H5010	R40H5519	NR	NR
	Fd	BX		7142 - D225	MD225	R40H5010	R40H5522	NR	NR
	Fd	BX		7108 - D184	MD184	R40H5010	R40H5519	NR	NR
	Fd	BX		7108 - D184	MD184	R40H5010	R40H5519	NR	NR
	Rd	BX		7142 - D225	MD225	R40H5010	R40H5522	NR	NR
	Rd	BX		7142 - D225	MD225	R40H5010	R40H5522	NR	NR
	Rd	BX		7108 - D184	MD184	R40H5010	R40H5519	NR	NR
	Rd	BX		7108 - D184	MD184	R40H5010	R40H5519	NR	NR
1989									
	Fd	BX		7108 - D184	MD184	R40H5010	R40H5519	NR	NR
	Fd	BX		7142 - D225	MD225	R40H5010	R40H5522	NR	NR
	Fd	BX		7108 - D184	MD184	R40H5010	R40H5519	NR	NR
	Fd	BX		7108 - D184	MD184	R40H5010	R40H5519	NR	NR
	Fd	BX		7108 - D184	MD184	R40H5010	R40H5519	NR	NR
	Fd	BX		7142 - D225	MD225	R40H5010	R40H5522	NR	NR
	Fd	BX		7108 - D184	MD184	R40H5010	R40H5519	NR	NR
	Fd	BX		7108 - D184	MD184	R40H5010	R40H5519	NR	NR
	Fd	BX		7142 - D225	MD225	R40H5010	R40H5522	NR	NR
	Fd	BX		7142 - D225	MD225	R40H5010	R40H5522	NR	NR
	Fd	BX		7108 - D184	MD184	R40H5010	R40H5519	NR	NR
	Fd	BX		7108 - D184	MD184	R40H5010	R40H5519	NR	NR
	Fd	BX		7142 - D225	MD225	R40H5010	R40H5522	NR	NR
	Rd	BX		7108 - D184	MD184	R40H5010	R40H5519	NR	NR
	Rd	BX		7108 - D184	MD184	R40H5010	R40H5519	NR	NR
	Rd	BX		7142 - D225	MD225	R40H5010	R40H5522	NR	NR
	Rd	BX		7142 - D225	MD225	R40H5010	R40H5522	NR	NR
S1400, S1452, S1454 Conventional Series									
	Fd	BX		7142 - D225	MD225	R40H5010	R40H5522	NR	NR
	Fd	BX		7108 - D184	MD184	R40H5010	R40H5519	NR	NR
	Fd	BX		7142 - D225	MD225	R40H5010	R40H5522	NR	NR
	Fd	BX		7108 - D184	MD184	R40H5010	R40H5519	NR	NR
	Fd	BX		7108 - D184	MD184	R40H5010	R40H5519	NR	NR
	Fd	BX		7142 - D225	MD225	R40H5010	R40H5522	NR	NR
	Fd	BX		7108 - D184	MD184	R40H5010	R40H5519	NR	NR
	Fd	BX		7108 - D184	MD184	R40H5010	R40H5519	NR	NR
	Fd	BX		7142 - D225	MD225	R40H5010	R40H5522	NR	NR
	Fd	BX		7108 - D184	MD184	R40H5010	R40H5519	NR	NR
	Fd	BX		7142 - D225	MD225	R40H5010	R40H5522	NR	NR
	Fd	BX		7142 - D225	MD225	R40H5010	R40H5522	NR	NR
	Fd	BX		7108 - D184	MD184	R40H5010	R40H5519	NR	NR
	Fd	BX		7108 - D184	MD184	R40H5010	R40H5519	NR	NR

37 - Also available as a New unit
266 - 10 Stud, Hat Shaped
269 - 5 Stud, U Shape
72 - Phenolic/Steel Face
267 - 10 Stud, U Shaped
271 - 6 Stud, Hat Shape
201 - Steel Piston
268 - 5 Stud, Hat Shape
272 - 6 Stud, U Shape

MERITOR DRUM OR ROTOR NO.	CALIPER OR CYLINDER BORE SIZE	MERITOR CALIPER OR WHEEL CYLINDER (LEFT)	MERITOR CALIPER OR WHEEL CYLINDER (RIGHT)	MERITOR CALIPER OR WHEEL CYLINDER REPAIR KIT	MERITOR CALIPER PISTON	MERITOR MASTER CYLINDER	MERITOR MASTER CYLINDER KIT	MERITOR BRAKE HOSE (LEFT)	MERITOR BRAKE HOSE (RIGHT)
ITE(Cont.)									
140, 1400, 1452, 1454 SERIES(Cont.)									
23-123572-004[271]	2-7/8 "	R42R55250	R42R55250[37]	R4066365	R4090096[72]	-	-	-	-
23-123552-004[266]	2-7/8 "	R42R55250	R42R55250[37]	R4066365	R4090096[72]	-	-	-	-
R44141476[268]	2-19/32 "	R42R55314	R42R55314[37]	R40107771	R4090100P[72]	-	-	-	-
23-123552-004[266]	3-3/8 "	R42R55099	R42R55098[37]	R4066780	R4090021[201]	-	-	-	-
23-123572-004[271]	2-19/32 "	R42R55314	R42R55314[37]	R40107771	R4090100P[72]	-	-	-	-
R44141476[268]	3-3/8 "	R42R55099	R42R55098[37]	R4066780	R4090021[201]	-	-	-	-
23-123552-004[266]	2-19/32 "	R42R55314	R42R55314[37]	R40107771	R4090100P[72]	-	-	-	-
R44141476[268]	2-7/8 "	R42R55250	R42R55250[37]	R4066365	R4090096[72]	-	-	-	-
23-123572-004[271]	3-3/8 "	R42R55099	R42R55098[37]	R4066780	R4090021[201]	-	-	-	-
23-123572-004[271]	2-7/8 "	R42R55250	R42R55250[37]	R4066365	R4090096[72]	-	-	R4577512	R4577512
23-123552-004[266]	2-7/8 "	R42R55250	R42R55250[37]	R4066365	R4090096[72]	-	-	R4577512	R4577512
23-123552-004[266]	2-19/32 "	R42R55314	R42R55314[37]	R40107771	R4090100P[72]	-	-	R4577512	R4577512
23-123572-004[271]	2-19/32 "	R42R55314	R42R55314[37]	R40107771	R4090100P[72]	-	-	R4577512	R4577512
R44141476[268]	3-3/8 "	R42R55099	R42R55098[37]	R4066780	R4090021[201]	-	-	-	-
23-122920-002[273]	2-7/8 "	R42R55250	R42R55250[37]	R4066365	R4090096[72]	-	-	-	-
R44141608[267]	2-19/32 "	R42R55314	R42R55314[37]	R40107771	R4090100P[72]	-	-	-	-
23-122920-002[273]	2-19/32 "	R42R55314	R42R55314[37]	R40107771	R4090100P[72]	-	-	-	-
23-123552-004[266]	2-7/8 "	R42R55250	R42R55250[37]	R4066365	R4090096[72]	-	-	-	-
R44141476[268]	2-7/8 "	R42R55250	R42R55250[37]	R4066365	R4090096[72]	-	-	-	-
R44141476[268]	2-19/32 "	R42R55314	R42R55314[37]	R40107771	R4090100P[72]	-	-	-	-
R44141608[267]	2-7/8 "	R42R55250	R42R55250[37]	R4066365	R4090096[72]	-	-	-	-
23-123552-004[266]	3-3/8 "	R42R55099	R42R55098[37]	R4066780	R4090021[201]	-	-	-	-
23-123572-004[271]	3-3/8 "	R42R55099	R42R55098[37]	R4066780	R4090021[201]	-	-	-	-
23-123572-004[271]	2-7/8 "	R42R55250	R42R55250[37]	R4066365	R4090096[72]	-	-	-	-
23-122920-002[273]	3-3/8 "	R42R55099	R42R55098[37]	R4066780	R4090021[201]	-	-	-	-
23-123572-004[271]	2-19/32 "	R42R55314	R42R55314[37]	R40107771	R4090100P[72]	-	-	-	-
23-123552-004[266]	2-7/8 "	R42R55250	R42R55250[37]	R4066365	R4090096[72]	-	-	R4577512	R4577512
23-123572-004[271]	2-7/8 "	R42R55250	R42R55250[37]	R4066365	R4090096[72]	-	-	R4577512	R4577512
23-123552-004[266]	2-19/32 "	R42R55314	R42R55314[37]	R40107771	R4090100P[72]	-	-	R4577512	R4577512
23-123572-004[271]	2-19/32 "	R42R55314	R42R55314[37]	R40107771	R4090100P[72]	-	-	R4577512	R4577512
23-123572-004[271]	3-3/8 "	R42R55099	R42R55098[37]	R4066780	R4090021[201]	-	-	-	-
R44141476[268]	2-7/8 "	R42R55250	R42R55250[37]	R4066365	R4090096[72]	-	-	-	-
23-122920-002[273]	3-3/8 "	R42R55099	R42R55098[37]	R4066780	R4090021[201]	-	-	-	-
23-123572-004[271]	2-19/32 "	R42R55314	R42R55314[37]	R40107771	R4090100P[72]	-	-	-	-
R44141476[268]	3-3/8 "	R42R55099	R42R55098[37]	R4066780	R4090021[201]	-	-	-	-
R44141608[267]	2-7/8 "	R42R55250	R42R55250[37]	R4066365	R4090096[72]	-	-	-	-
R44141608[267]	2-19/32 "	R42R55314	R42R55314[37]	R40107771	R4090100P[72]	-	-	-	-
R44141476[268]	2-19/32 "	R42R55314	R42R55314[37]	R40107771	R4090100P[72]	-	-	-	-
23-122920-002[273]	2-7/8 "	R42R55250	R42R55250[37]	R4066365	R4090096[72]	-	-	-	-
23-123552-004[266]	2-7/8 "	R42R55250	R42R55250[37]	R4066365	R4090096[72]	-	-	-	-
23-122920-002[273]	2-19/32 "	R42R55314	R42R55314[37]	R40107771	R4090100P[72]	-	-	-	-
23-123552-004[266]	3-3/8 "	R42R55099	R42R55098[37]	R4066780	R4090021[201]	-	-	-	-
23-123572-004[271]	2-7/8 "	R42R55250	R42R55250[37]	R4066365	R4090096[72]	-	-	-	-
23-123572-004[271]	2-19/32 "	R42R55314	R42R55314[37]	R40107771	R4090100P[72]	-	-	R4577512	R4577512
23-123552-004[266]	2-19/32 "	R42R55314	R42R55314[37]	R40107771	R4090100P[72]	-	-	R4577512	R4577512
23-123552-004[266]	2-7/8 "	R42R55250	R42R55250[37]	R4066365	R4090096[72]	-	-	R4577512	R4577512
23-123572-004[271]	2-7/8 "	R42R55250	R42R55250[37]	R4066365	R4090096[72]	-	-	R4577512	R4577512
23-122527-002[272]	2-7/8 "	R42R55250	R42R55250[37]	R4066365	R4090096[72]	-	-	-	-
23-122701-002[269]	3-3/8 "	R42R55099	R42R55098[37]	R4066780	R4090021[201]	-	-	-	-
R44141476[268]	2-7/8 "	R42R55250	R42R55250[37]	R4066365	R4090096[72]	-	-	-	-
23-123572-004[271]	2-19/32 "	R42R55314	R42R55314[37]	R40107771	R4090100P[72]	-	-	-	-
R44141858[275]	2-19/32 "	R42R55314	R42R55314[37]	R40107771	R4090100P[72]	-	-	-	-
23-122701-002[269]	2-7/8 "	R42R55250	R42R55250[37]	R4066365	R4090096[72]	-	-	-	-
23-122701-002[269]	2-19/32 "	R42R55314	R42R55314[37]	R40107771	R4090100P[72]	-	-	-	-
23-123552-004[266]	2-19/32 "	R42R55314	R42R55314[37]	R40107771	R4090100P[72]	-	-	-	-
R44141858[275]	2-7/8 "	R42R55250	R42R55250[37]	R4066365	R4090096[72]	-	-	-	-
23-122920-002[273]	3-3/8 "	R42R55099	R42R55098[37]	R4066780	R4090021[201]	-	-	-	-
23-123552-004[266]	2-7/8 "	R42R55250	R42R55250[37]	R4066365	R4090096[72]	-	-	-	-
23-123572-004[271]	2-7/8 "	R42R55250	R42R55250[37]	R4066365	R4090096[72]	-	-	-	-
23-122527-002[272]	3-3/8 "	R42R55099	R42R55098[37]	R4066780	R4090021[201]	-	-	-	-
R44141476[268]	2-19/32 "	R42R55314	R42R55314[37]	R40107771	R4090100P[72]	-	-	-	-

273 - 5 Stud, U Shape, .780 Dia. Studs

275 - 5 Stud, U Shape, .656 Dia. Studs

MAKE MODEL YEAR AXLE CODE AXLE WEIGHT	AXLE & BRK. TYPE	BRK. MFG.	BRAKE SIZE	FMSI	MERITOR DISC PAD OR BRAKE SHOE	MERITOR GUIDE PIN OR RETURN SPRING KIT	MERITOR CALIPER HWD. KIT OR RETURN SPRING KIT	MERITOR ADJUSTER KIT (LEFT WHEEL)	MERITOR ADJUSTER KIT (RIGHT WHEEL)
ITE(Cont.)									
140, 1400, 1452, 1454 SERIES(Cont.)									
1989									
	Fd	BX		7108 - D184	MD184	R40H5010	R40H5519	NR	NR
	Fd	BX		7108 - D184	MD184	R40H5010	R40H5519	NR	NR
	Fd	BX		7108 - D184	MD184	R40H5010	R40H5519	NR	NR
	Fd	BX		7142 - D225	MD225	R40H5010	R40H5522	NR	NR
	Fd	BX		7108 - D184	MD184	R40H5010	R40H5519	NR	NR
	Fd	BX		7108 - D184	MD184	R40H5010	R40H5519	NR	NR
	Rd	BX		7142 - D225	MD225	R40H5010	R40H5522	NR	NR
	Rd	BX		7108 - D184	MD184	R40H5010	R40H5519	NR	NR
	Rd	BX		7108 - D184	MD184	R40H5010	R40H5519	NR	NR
	Rd	BX		7142 - D225	MD225	R40H5010	R40H5522	NR	NR
	Rd	BX		7108 - D184	MD184	R40H5010	R40H5519	NR	NR
	Rd	BX		7108 - D184	MD184	R40H5010	R40H5519	NR	NR
	Rd	BX		7142 - D225	MD225	R40H5010	R40H5522	NR	NR
	Rd	BX		7142 - D225	MD225	R40H5010	R40H5522	NR	NR
	Rd	BX		7142 - D225	MD225	R40H5010	R40H5522	NR	NR
	Rd	BX		7108 - D184	MD184	R40H5010	R40H5519	NR	NR
S1400, S1452, S1454 Conventional Series 14039, 14057	Rd	BX		7142 - D225	MD225	R40H5010	R40H5522	NR	NR
	Rd	BX		7108 - D184	MD184	R40H5010	R40H5519	NR	NR
1988 M1400, M1452, M1454 Metro Series, Forward Control	Fd	BX		7108 - D184	MD184	R40H5010	R40H5519	NR	NR
	Fd	BX		7108 - D184	MD184	R40H5010	R40H5519	NR	NR
	Fd	BX		7108 - D184	MD184	R40H5010	R40H5519	NR	NR
	Fd	BX		7142 - D225	MD225	R40H5010	R40H5522	NR	NR
	Fd	BX		7142 - D225	MD225	R40H5010	R40H5522	NR	NR
	Fd	BX		7108 - D184	MD184	R40H5010	R40H5519	NR	NR
	Fd	BX		7142 - D225	MD225	R40H5010	R40H5522	NR	NR
	Fd	BX		7108 - D184	MD184	R40H5010	R40H5519	NR	NR
	Fd	BX		7108 - D184	MD184	R40H5010	R40H5519	NR	NR
	Fd	BX		7142 - D225	MD225	R40H5010	R40H5522	NR	NR
	Fd	BX		7108 - D184	MD184	R40H5010	R40H5519	NR	NR
	Fd	BX		7108 - D184	MD184	R40H5010	R40H5519	NR	NR
	Fd	BX		7142 - D225	MD225	R40H5010	R40H5522	NR	NR
	Rd	BX		7108 - D184	MD184	R40H5010	R40H5519	NR	NR
	Rd	BX		7142 - D225	MD225	R40H5010	R40H5522	NR	NR
	Rd	BX		7142 - D225	MD225	R40H5010	R40H5522	NR	NR
	Rd	BX		7108 - D184	MD184	R40H5010	R40H5519	NR	NR
S1400, S1452, S1454 Conventional Series	Fd	BX		7142 - D225	MD225	R40H5010	R40H5522	NR	NR
	Fd	BX		7108 - D184	MD184	R40H5010	R40H5519	NR	NR
	Fd	BX		7108 - D184	MD184	R40H5010	R40H5519	NR	NR
	Fd	BX		7108 - D184	MD184	R40H5010	R40H5519	NR	NR
	Fd	BX		7142 - D225	MD225	R40H5010	R40H5522	NR	NR
	Fd	BX		7142 - D225	MD225	R40H5010	R40H5522	NR	NR
	Fd	BX		7108 - D184	MD184	R40H5010	R40H5519	NR	NR
	Fd	BX		7108 - D184	MD184	R40H5010	R40H5519	NR	NR
	Fd	BX		7142 - D225	MD225	R40H5010	R40H5522	NR	NR
	Fd	BX		7142 - D225	MD225	R40H5010	R40H5522	NR	NR
	Fd	BX		7108 - D184	MD184	R40H5010	R40H5519	NR	NR
	Fd	BX		7108 - D184	MD184	R40H5010	R40H5519	NR	NR
	Fd	BX		7108 - D184	MD184	R40H5010	R40H5519	NR	NR
	Fd	BX		7108 - D184	MD184	R40H5010	R40H5519	NR	NR
	Fd	BX		7108 - D184	MD184	R40H5010	R40H5519	NR	NR
	Fd	BX		7108 - D184	MD184	R40H5010	R40H5519	NR	NR
	Fd	BX		7142 - D225	MD225	R40H5010	R40H5522	NR	NR
	Fd	BX		7142 - D225	MD225	R40H5010	R40H5522	NR	NR
	Fd	BX		7108 - D184	MD184	R40H5010	R40H5519	NR	NR
	Fd	BX		7108 - D184	MD184	R40H5010	R40H5519	NR	NR
	Rd	BX		7108 - D184	MD184	R40H5010	R40H5519	NR	NR
	Rd	BX		7108 - D184	MD184	R40H5010	R40H5519	NR	NR

37 - Also available as a New unit
266 - 10 Stud, Hat Shaped
269 - 5 Stud, U Shape
72 - Phenolic/Steel Face
267 - 10 Stud, U Shaped
270 - 5 Stud, U Shape, .766 Dia. Studs
201 - Steel Piston
268 - 5 Stud, Hat Shape
271 - 6 Stud, Hat Shape

MERITOR DRUM OR ROTOR NO.	CALIPER OR CYLINDER BORE SIZE	MERITOR CALIPER OR WHEEL CYLINDER (LEFT)	MERITOR CALIPER OR WHEEL CYLINDER (RIGHT)	MERITOR CALIPER OR WHEEL CYLINDER REPAIR KIT	MERITOR CALIPER PISTON	MERITOR MASTER CYLINDER	MERITOR MASTER CYLINDER KIT	MERITOR BRAKE HOSE (LEFT)	MERITOR BRAKE HOSE (RIGHT)
									ITE(Cont.)
									140, 1400, 1452, 1454 SERIES(Cont.)
R44141858[275]	3-3/8 "	R42R55099	R42R55098[37]	R4066780	R4090021[201]	-	-	-	-
23-123572-004[271]	3-3/8 "	R42R55099	R42R55098[37]	R4066780	R4090021[201]	-	-	-	-
R44141476[268]	3-3/8 "	R42R55099	R42R55098[37]	R4066780	R4090021[201]	-	-	-	-
23-122920-002[273]	2-7/8 "	R42R55250	R42R55250[37]	R4066365	R4090096[72]	-	-	-	-
23-122920-002[273]	2-19/32 "	R42R55314	R42R55314[37]	R40107771	R4090100P[72]	-	-	-	-
23-123552-004[266]	3-3/8 "	R42R55099	R42R55098[37]	R4066780	R4090021[201]	-	-	-	-
23-123552-004[266]	2-7/8 "	R42R55250	R42R55250[37]	R4066365	R4090096[72]	-	-	R4577512	R4577512
23-123552-004[266]	2-19/32 "	R42R55314	R42R55314[37]	R40107771	R4090100P[72]	-	-	R4577512	R4577512
R44141627[270]	2-19/32 "	R42R55314	R42R55314[37]	R40107771	R4090100P[72]	-	-	R4577512	R4577512
R44141627[270]	2-7/8 "	R42R55250	R42R55250[37]	R4066365	R4090096[72]	-	-	R4577512	R4577512
R44141628[269]	2-19/32 "	R42R55314	R42R55314[37]	R40107771	R4090100P[72]	-	-	R4577512	R4577512
R44141629[269]	2-19/32 "	R42R55314	R42R55314[37]	R40107771	R4090100P[72]	-	-	R4577512	R4577512
R44141628[269]	2-7/8 "	R42R55250	R42R55250[37]	R4066365	R4090096[72]	-	-	R4577512	R4577512
23-123572-004[271]	2-7/8 "	R42R55250	R42R55250[37]	R4066365	R4090096[72]	-	-	R4577512	R4577512
R44141629[269]	2-7/8 "	R42R55250	R42R55250[37]	R4066365	R4090096[72]	-	-	R4577512	R4577512
23-123572-004[271]	2-19/32 "	R42R55314	R42R55314[37]	R40107771	R4090100P[72]	-	-	R4577512	R4577512
R44141608[267]	2-7/8 "	R42R55250	R42R55250[37]	R4066365	R4090096[72]	-	-	R4577512	R4577512
R44141608[267]	2-19/32 "	R42R55314	R42R55314[37]	R40107771	R4090100P[72]	-	-	R4577512	R4577512
R44141476[268]	2-19/32 "	R42R55314	R42R55314[37]	R40107771	R4090100P[72]	-	-	-	-
R44141608[267]	2-19/32 "	R42R55314	R42R55314[37]	R40107771	R4090100P[72]	-	-	-	-
R44141476[268]	3-3/8 "	R42R55099	R42R55098[37]	R4066780	R4090021[201]	-	-	-	-
R44141608[267]	2-7/8 "	R42R55250	R42R55250[37]	R4066365	R4090096[72]	-	-	-	-
R44141476[268]	2-7/8 "	R42R55250	R42R55250[37]	R4066365	R4090096[72]	-	-	-	-
23-123572-004[271]	3-3/8 "	R42R55099	R42R55098[37]	R4066780	R4090021[201]	-	-	-	-
23-122920-002[273]	2-7/8 "	R42R55250	R42R55250[37]	R4066365	R4090096[72]	-	-	-	-
23-123572-004[271]	2-19/32 "	R42R55314	R42R55314[37]	R40107771	R4090100P[72]	-	-	-	-
23-123552-004[266]	3-3/8 "	R42R55099	R42R55098[37]	R4066780	R4090021[201]	-	-	-	-
23-123572-004[271]	2-7/8 "	R42R55250	R42R55250[37]	R4066365	R4090096[72]	-	-	-	-
23-122920-002[273]	3-3/8 "	R42R55099	R42R55098[37]	R4066780	R4090021[201]	-	-	-	-
23-122920-002[273]	2-19/32 "	R42R55314	R42R55314[37]	R40107771	R4090100P[72]	-	-	-	-
23-123552-004[266]	2-7/8 "	R42R55250	R42R55250[37]	R4066365	R4090096[72]	-	-	-	-
23-123572-004[271]	2-19/32 "	R42R55314	R42R55314[37]	R40107771	R4090100P[72]	-	-	R4577512	R4577512
23-123572-004[271]	2-7/8 "	R42R55250	R42R55250[37]	R4066365	R4090096[72]	-	-	R4577512	R4577512
23-123552-004[266]	2-7/8 "	R42R55250	R42R55250[37]	R4066365	R4090096[72]	-	-	R4577512	R4577512
23-123552-004[266]	2-19/32 "	R42R55314	R42R55314[37]	R40107771	R4090100P[72]	-	-	R4577512	R4577512
23-123552-004[266]	2-7/8 "	R42R55250	R42R55250[37]	R4066365	R4090096[72]	-	-	-	-
R44141858[275]	2-19/32 "	R42R55314	R42R55314[37]	R40107771	R4090100P[72]	-	-	-	-
23-122920-002[273]	3-3/8 "	R42R55099	R42R55098[37]	R4066780	R4090021[201]	-	-	-	-
23-122527-002[272]	2-19/32 "	R42R55314	R42R55314[37]	R40107771	R4090100P[72]	-	-	-	-
23-122920-002[273]	2-7/8 "	R42R55250	R42R55250[37]	R4066365	R4090096[72]	-	-	-	-
23-122527-002[272]	2-7/8 "	R42R55250	R42R55250[37]	R4066365	R4090096[72]	-	-	-	-
23-122920-002[273]	2-19/32 "	R42R55314	R42R55314[37]	R40107771	R4090100P[72]	-	-	-	-
23-123572-004[271]	3-3/8 "	R42R55099	R42R55098[37]	R4066780	R4090021[201]	-	-	-	-
23-122701-002[269]	2-7/8 "	R42R55250	R42R55250[37]	R4066365	R4090096[72]	-	-	-	-
23-123572-004[271]	2-7/8 "	R42R55250	R42R55250[37]	R4066365	R4090096[72]	-	-	-	-
23-123572-004[271]	2-19/32 "	R42R55314	R42R55314[37]	R40107771	R4090100P[72]	-	-	-	-
R44141476[268]	3-3/8 "	R42R55099	R42R55098[37]	R4066780	R4090021[201]	-	-	-	-
23-122527-002[272]	3-3/8 "	R42R55099	R42R55098[37]	R4066780	R4090021[201]	-	-	-	-
23-123552-004[266]	3-3/8 "	R42R55099	R42R55098[37]	R4066780	R4090021[201]	-	-	-	-
R44141858[275]	3-3/8 "	R42R55099	R42R55098[37]	R4066780	R4090021[201]	-	-	-	-
23-122701-002[269]	2-19/32 "	R42R55314	R42R55314[37]	R40107771	R4090100P[72]	-	-	-	-
23-122701-002[269]	3-3/8 "	R42R55099	R42R55098[37]	R4066780	R4090021[201]	-	-	-	-
R44141476[268]	2-7/8 "	R42R55250	R42R55250[37]	R4066365	R4090096[72]	-	-	-	-
R44141858[275]	2-7/8 "	R42R55250	R42R55250[37]	R4066365	R4090096[72]	-	-	-	-
R44141476[268]	2-19/32 "	R42R55314	R42R55314[37]	R40107771	R4090100P[72]	-	-	-	-
23-123552-004[266]	2-19/32 "	R42R55314	R42R55314[37]	R40107771	R4090100P[72]	-	-	-	-
R44141629[269]	2-19/32 "	R42R55314	R42R55314[37]	R40107771	R4090100P[72]	-	-	R4577512	R4577512
R44141627[270]	2-19/32 "	R42R55314	R42R55314[37]	R40107771	R4090100P[72]	-	-	R4577512	R4577512

272 - 6 Stud, U Shape

273 - 5 Stud, U Shape, .780 Dia. Studs

275 - 5 Stud, U Shape, .656 Dia. Studs

MAKE MODEL YEAR AXLE CODE AXLE WEIGHT	AXLE & BRK. TYPE	BRK. MFG.	BRAKE SIZE	FMSI	MERITOR DISC PAD OR BRAKE SHOE	MERITOR GUIDE PIN OR RETURN SPRING KIT	MERITOR CALIPER HWD. KIT OR RETURN SPRING KIT	MERITOR ADJUSTER KIT (LEFT WHEEL)	MERITOR ADJUSTER KIT (RIGHT WHEEL)
ITE(Cont.)									
140, 1400, 1452, 1454 SERIES(Cont.)									
1988									
	Rd	BX		7142 - D225	MD225	R40H5010	R40H5522	NR	NR
	Rd	BX		7142 - D225	MD225	R40H5010	R40H5522	NR	NR
	Rd	BX		7108 - D184	MD184	R40H5010	R40H5519	NR	NR
	Rd	BX		7108 - D184	MD184	R40H5010	R40H5519	NR	NR
	Rd	BX		7142 - D225	MD225	R40H5010	R40H5522	NR	NR
	Rd	BX		7108 - D184	MD184	R40H5010	R40H5519	NR	NR
	Rd	BX		7142 - D225	MD225	R40H5010	R40H5522	NR	NR
	Rd	BX		7142 - D225	MD225	R40H5010	R40H5522	NR	NR
S1400, S1452, S1454 Conventional Series 14039, 14057									
	Rd	BX		7108 - D184	MD184	R40H5010	R40H5519	NR	NR
	Rd	BX		7142 - D225	MD225	R40H5010	R40H5522	NR	NR
1987 M1400, M1452, M1454 Metro Series, Forward Control									
	Fd	BX		7108 - D184	MD184	R40H5010	R40H5519	NR	NR
	Fd	BX		7108 - D184	MD184	R40H5010	R40H5519	NR	NR
	Fd	BX		7142 - D225	MD225	R40H5010	R40H5522	NR	NR
	Fd	BX		7108 - D184	MD184	R40H5010	R40H5519	NR	NR
	Fd	BX		7142 - D225	MD225	R40H5010	R40H5522	NR	NR
	Fd	BX		7108 - D184	MD184	R40H5010	R40H5519	NR	NR
	Fd	BX		7108 - D184	MD184	R40H5010	R40H5519	NR	NR
	Fd	BX		7142 - D225	MD225	R40H5010	R40H5522	NR	NR
	Fd	BX		7108 - D184	MD184	R40H5010	R40H5519	NR	NR
	Fd	BX		7142 - D225	MD225	R40H5010	R40H5522	NR	NR
	Fd	BX		7108 - D184	MD184	R40H5010	R40H5519	NR	NR
	Fd	BX		7142 - D225	MD225	R40H5010	R40H5522	NR	NR
	Fd	BX		7108 - D184	MD184	R40H5010	R40H5519	NR	NR
	Rd	BX		7108 - D184	MD184	R40H5010	R40H5519	NR	NR
	Rd	BX		7108 - D184	MD184	R40H5010	R40H5519	NR	NR
	Rd	BX		7142 - D225	MD225	R40H5010	R40H5522	NR	NR
	Rd	BX		7142 - D225	MD225	R40H5010	R40H5522	NR	NR
S1400, S1452, S1454 Conventional Series									
	Fd	BX		7142 - D225	MD225	R40H5010	R40H5522	NR	NR
	Fd	BX		7108 - D184	MD184	R40H5010	R40H5519	NR	NR
	Fd	BX		7108 - D184	MD184	R40H5010	R40H5519	NR	NR
	Fd	BX		7108 - D184	MD184	R40H5010	R40H5519	NR	NR
	Fd	BX		7108 - D184	MD184	R40H5010	R40H5519	NR	NR
	Fd	BX		7108 - D184	MD184	R40H5010	R40H5519	NR	NR
	Fd	BX		7142 - D225	MD225	R40H5010	R40H5522	NR	NR
	Fd	BX		7108 - D184	MD184	R40H5010	R40H5519	NR	NR
	Fd	BX		7108 - D184	MD184	R40H5010	R40H5519	NR	NR
	Fd	BX		7108 - D184	MD184	R40H5010	R40H5519	NR	NR
	Fd	BX		7142 - D225	MD225	R40H5010	R40H5522	NR	NR
	Fd	BX		7142 - D225	MD225	R40H5010	R40H5522	NR	NR
	Fd	BX		7142 - D225	MD225	R40H5010	R40H5522	NR	NR
	Fd	BX		7142 - D225	MD225	R40H5010	R40H5522	NR	NR
	Fd	BX		7142 - D225	MD225	R40H5010	R40H5522	NR	NR
	Fd	BX		7108 - D184	MD184	R40H5010	R40H5519	NR	NR
	Fd	BX		7108 - D184	MD184	R40H5010	R40H5519	NR	NR
	Fd	BX		7108 - D184	MD184	R40H5010	R40H5519	NR	NR
	Fd	BX		7108 - D184	MD184	R40H5010	R40H5519	NR	NR
	Fd	BX		7108 - D184	MD184	R40H5010	R40H5519	NR	NR
	Rd	BX		7108 - D184	MD184	R40H5010	R40H5519	NR	NR
	Rd	BX		7142 - D225	MD225	R40H5010	R40H5522	NR	NR
	Rd	BX		7108 - D184	MD184	R40H5010	R40H5519	NR	NR
	Rd	BX		7142 - D225	MD225	R40H5010	R40H5522	NR	NR
	Rd	BX		7142 - D225	MD225	R40H5010	R40H5522	NR	NR
	Rd	BX		7108 - D184	MD184	R40H5010	R40H5519	NR	NR
	Rd	BX		7108 - D184	MD184	R40H5010	R40H5519	NR	NR
	Rd	BX		7142 - D225	MD225	R40H5010	R40H5522	NR	NR
	Rd	BX		7142 - D225	MD225	R40H5010	R40H5522	NR	NR
	Rd	BX		7108 - D184	MD184	R40H5010	R40H5519	NR	NR

37 - Also available as a New unit
266 - 10 Stud, Hat Shaped
269 - 5 Stud, U Shape
72 - Phenolic/Steel Face
267 - 10 Stud, U Shaped
270 - 5 Stud, U Shape, .766 Dia. Studs
201 - Steel Piston
268 - 5 Stud, Hat Shape
271 - 6 Stud, Hat Shape

MERITOR DRUM OR ROTOR NO.	CALIPER OR CYLINDER BORE SIZE	MERITOR CALIPER OR WHEEL CYLINDER (LEFT)	MERITOR CALIPER OR WHEEL CYLINDER (RIGHT)	MERITOR CALIPER OR WHEEL CYLINDER REPAIR KIT	MERITOR CALIPER PISTON	MERITOR MASTER CYLINDER	MERITOR MASTER CYLINDER KIT	MERITOR BRAKE HOSE (LEFT)	MERITOR BRAKE HOSE (RIGHT)
									ITE(Cont.)
									140, 1400, 1452, 1454 SERIES(Cont.)
23-123572-004[271]	2-7/8 "	R42R55250	R42R55250[37]	R4066365	R4090096[72]	-	-	R4577512	R4577512
23-123552-004[266]	2-7/8 "	R42R55250	R42R55250[37]	R4066365	R4090096[72]	-	-	R4577512	R4577512
23-123572-004[271]	2-19/32 "	R42R55314	R42R55314[37]	R40107771	R4090100P[72]	-	-	R4577512	R4577512
R44141628[269]	2-19/32 "	R42R55314	R42R55314[37]	R40107771	R4090100P[72]	-	-	R4577512	R4577512
R44141629[269]	2-7/8 "	R42R55250	R42R55250[37]	R4066365	R4090096[72]	-	-	R4577512	R4577512
23-123552-004[266]	2-19/32 "	R42R55314	R42R55314[37]	R40107771	R4090100P[72]	-	-	R4577512	R4577512
R44141628[269]	2-7/8 "	R42R55250	R42R55250[37]	R4066365	R4090096[72]	-	-	R4577512	R4577512
R44141627[270]	2-7/8 "	R42R55250	R42R55250[37]	R4066365	R4090096[72]	-	-	R4577512	R4577512
R44141608[267]	2-19/32 "	R42R55314	R42R55314[37]	R40107771	R4090100P[72]	-	-	R4577512	R4577512
R44141608[267]	2-7/8 "	R42R55250	R42R55250[37]	R4066365	R4090096[72]	-	-	R4577512	R4577512
R44141476[268]	3-3/8 "	R42R55099	R42R55098[37]	R4066780	R4090021[201]	-	-	-	-
R44141476[268]	2-19/32 "	R42R55314	R42R55314[37]	R40107771	R4090100P[72]	-	-	-	-
23-123552-004[266]	2-7/8 "	R42R55250	R42R55250[37]	R4066365	R4090096[72]	-	-	-	-
23-122920-002[273]	2-19/32 "	R42R55314	R42R55314[37]	R40107771	R4090100P[72]	-	-	-	-
23-122920-002[273]	2-7/8 "	R42R55250	R42R55250[37]	R4066365	R4090096[72]	-	-	-	-
R44141608[267]	2-19/32 "	R42R55314	R42R55314[37]	R40107771	R4090100P[72]	-	-	-	-
23-123572-004[271]	3-3/8 "	R42R55099	R42R55098[37]	R4066780	R4090021[201]	-	-	-	-
R44141608[267]	2-7/8 "	R42R55250	R42R55250[37]	R4066365	R4090096[72]	-	-	-	-
23-122920-002[273]	3-3/8 "	R42R55099	R42R55098[37]	R4066780	R4090021[201]	-	-	-	-
R44141476[268]	2-7/8 "	R42R55250	R42R55250[37]	R4066365	R4090096[72]	-	-	-	-
23-123572-004[271]	2-19/32 "	R42R55314	R42R55314[37]	R40107771	R4090100P[72]	-	-	-	-
23-123572-004[271]	2-7/8 "	R42R55250	R42R55250[37]	R4066365	R4090096[72]	-	-	-	-
23-123552-004[266]	3-3/8 "	R42R55099	R42R55098[37]	R4066780	R4090021[201]	-	-	-	-
23-123552-004[266]	2-19/32 "	R42R55314	R42R55314[37]	R40107771	R4090100P[72]	-	-	R4577512	R4577512
23-123572-004[271]	2-19/32 "	R42R55314	R42R55314[37]	R40107771	R4090100P[72]	-	-	R4577512	R4577512
23-123572-004[271]	2-7/8 "	R42R55250	R42R55250[37]	R4066365	R4090096[72]	-	-	R4577512	R4577512
23-123552-004[266]	2-7/8 "	R42R55250	R42R55250[37]	R4066365	R4090096[72]	-	-	R4577512	R4577512
23-122701-002[269]	2-7/8 "	R42R55250	R42R55250[37]	R4066365	R4090096[72]	-	-	-	-
23-122920-002[273]	2-19/32 "	R42R55314	R42R55314[37]	R40107771	R4090100P[72]	-	-	-	-
23-123572-004[271]	3-3/8 "	R42R55099	R42R55098[37]	R4066780	R4090021[201]	-	-	-	-
23-123552-004[266]	2-19/32 "	R42R55314	R42R55314[37]	R40107771	R4090100P[72]	-	-	-	-
23-123552-004[266]	3-3/8 "	R42R55099	R42R55098[37]	R4066780	R4090021[201]	-	-	-	-
23-122920-002[273]	3-3/8 "	R42R55099	R42R55098[37]	R4066780	R4090021[201]	-	-	-	-
23-123552-004[266]	2-7/8 "	R42R55250	R42R55250[37]	R4066365	R4090096[72]	-	-	-	-
23-122701-002[269]	3-3/8 "	R42R55099	R42R55098[37]	R4066780	R4090021[201]	-	-	-	-
R44141858[275]	2-19/32 "	R42R55314	R42R55314[37]	R40107771	R4090100P[72]	-	-	-	-
23-122701-002[269]	2-19/32 "	R42R55314	R42R55314[37]	R40107771	R4090100P[72]	-	-	-	-
23-122527-002[272]	2-7/8 "	R42R55250	R42R55250[37]	R4066365	R4090096[72]	-	-	-	-
23-123572-004[271]	2-7/8 "	R42R55250	R42R55250[37]	R4066365	R4090096[72]	-	-	-	-
R44141476[268]	2-7/8 "	R42R55250	R42R55250[37]	R4066365	R4090096[72]	-	-	-	-
R44141858[275]	2-7/8 "	R42R55250	R42R55250[37]	R4066365	R4090096[72]	-	-	-	-
23-122920-002[273]	2-7/8 "	R42R55250	R42R55250[37]	R4066365	R4090096[72]	-	-	-	-
23-122527-002[272]	2-19/32 "	R42R55314	R42R55314[37]	R40107771	R4090100P[72]	-	-	-	-
R44141476[268]	2-19/32 "	R42R55314	R42R55314[37]	R40107771	R4090100P[72]	-	-	-	-
23-122527-002[272]	3-3/8 "	R42R55099	R42R55098[37]	R4066780	R4090021[201]	-	-	-	-
23-123572-004[271]	2-19/32 "	R42R55314	R42R55314[37]	R40107771	R4090100P[72]	-	-	-	-
R44141476[268]	3-3/8 "	R42R55099	R42R55098[37]	R4066780	R4090021[201]	-	-	-	-
R44141858[275]	3-3/8 "	R42R55099	R42R55098[37]	R4066780	R4090021[201]	-	-	-	-
R44141627[270]	2-19/32 "	R42R55314	R42R55314[37]	R40107771	R4090100P[72]	-	-	R4577512	R4577512
R44141628[269]	2-7/8 "	R42R55250	R42R55250[37]	R4066365	R4090096[72]	-	-	R4577512	R4577512
23-123572-004[271]	2-19/32 "	R42R55314	R42R55314[37]	R40107771	R4090100P[72]	-	-	R4577512	R4577512
23-123552-004[266]	2-7/8 "	R42R55250	R42R55250[37]	R4066365	R4090096[72]	-	-	R4577512	R4577512
R44141627[270]	2-7/8 "	R42R55250	R42R55250[37]	R4066365	R4090096[72]	-	-	R4577512	R4577512
R44141629[269]	2-19/32 "	R42R55314	R42R55314[37]	R40107771	R4090100P[72]	-	-	R4577512	R4577512
R44141628[269]	2-19/32 "	R42R55314	R42R55314[37]	R40107771	R4090100P[72]	-	-	R4577512	R4577512
R44141629[269]	2-7/8 "	R42R55250	R42R55250[37]	R4066365	R4090096[72]	-	-	R4577512	R4577512
23-123572-004[271]	2-7/8 "	R42R55250	R42R55250[37]	R4066365	R4090096[72]	-	-	R4577512	R4577512
23-123552-004[266]	2-19/32 "	R42R55314	R42R55314[37]	R40107771	R4090100P[72]	-	-	R4577512	R4577512

272 - 6 Stud, U Shape

273 - 5 Stud, U Shape, .780 Dia. Studs

275 - 5 Stud, U Shape, .656 Dia. Studs

MAKE MODEL YEAR AXLE CODE AXLE WEIGHT	AXLE & BRK. TYPE	BRK. MFG.	BRAKE SIZE	FMSI	MERITOR DISC PAD OR BRAKE SHOE	MERITOR GUIDE PIN OR RETURN SPRING KIT	MERITOR CALIPER HWD. KIT OR RETURN SPRING KIT	MERITOR ADJUSTER KIT (LEFT WHEEL)	MERITOR ADJUSTER KIT (RIGHT WHEEL)
ITE(Cont.)									
140, 1400, 1452, 1454 SERIES(Cont.)									
1987 S1400, S1452, S1454 Conventional Series 14039, 14057	Rd	BX		7142 - D225	MD225	R40H5010	R40H5522	NR	NR
	Rd	BX		7108 - D184	MD184	R40H5010	R40H5519	NR	NR
1986 S1400, S1452, S1454 Conventional Series	Fd	BX		7108 - D184	MD184	R40H5010	R40H5519	NR	NR
	Fd	BX		7142 - D225	MD225	R40H5010	R40H5522	NR	NR
	Fd	BX		7108 - D184	MD184	R40H5010	R40H5519	NR	NR
	Fd	BX		7142 - D225	MD225	R40H5010	R40H5522	NR	NR
	Fd	BX		7108 - D184	MD184	R40H5010	R40H5519	NR	NR
	Fd	BX		7108 - D184	MD184	R40H5010	R40H5519	NR	NR
	Fd	BX		7142 - D225	MD225	R40H5010	R40H5522	NR	NR
	Fd	BX		7108 - D184	MD184	R40H5010	R40H5519	NR	NR
	Fd	BX		7142 - D225	MD225	R40H5010	R40H5522	NR	NR
	Fd	BX		7108 - D184	MD184	R40H5010	R40H5519	NR	NR
	Fd	BX		7142 - D225	MD225	R40H5010	R40H5522	NR	NR
	Fd	BX		7108 - D184	MD184	R40H5010	R40H5519	NR	NR
	Fd	BX		7108 - D184	MD184	R40H5010	R40H5519	NR	NR
	Fd	BX		7108 - D184	MD184	R40H5010	R40H5519	NR	NR
	Fd	BX		7142 - D225	MD225	R40H5010	R40H5522	NR	NR
	Fd	BX		7142 - D225	MD225	R40H5010	R40H5522	NR	NR
	Fd	BX		7108 - D184	MD184	R40H5010	R40H5519	NR	NR
	Fd	BX		7108 - D184	MD184	R40H5010	R40H5519	NR	NR
	Fd	BX		7108 - D184	MD184	R40H5010	R40H5519	NR	NR
	Fd	BX		7108 - D184	MD184	R40H5010	R40H5519	NR	NR
	Fd	BX		7108 - D184	MD184	R40H5010	R40H5519	NR	NR
	Rd	BX		7108 - D184	MD184	R40H5010	R40H5519	NR	NR
	Rd	BX		7142 - D225	MD225	R40H5010	R40H5522	NR	NR
	Rd	BX		7108 - D184	MD184	R40H5010	R40H5519	NR	NR
	Rd	BX		7108 - D184	MD184	R40H5010	R40H5519	NR	NR
	Rd	BX		7108 - D184	MD184	R40H5010	R40H5519	NR	NR
	Rd	BX		7142 - D225	MD225	R40H5010	R40H5522	NR	NR
	Rd	BX		7142 - D225	MD225	R40H5010	R40H5522	NR	NR
	Rd	BX		7108 - D184	MD184	R40H5010	R40H5519	NR	NR
	Rd	BX		7142 - D225	MD225	R40H5010	R40H5522	NR	NR
	Rd	BX		7142 - D225	MD225	R40H5010	R40H5522	NR	NR
S1400, S1452, S1454 Conventional Series 14039, 14057	Rd	BX		7142 - D225	MD225	R40H5010	R40H5522	NR	NR
	Rd	BX		7108 - D184	MD184	R40H5010	R40H5519	NR	NR
1985 S1400, S1452, S1454 Conventional Series	Fd	BX		7108 - D184	MD184	R40H5010	R40H5519	NR	NR
	Fd	BX		7108 - D184	MD184	R40H5010	R40H5519	NR	NR
	Fd	BX		7108 - D184	MD184	R40H5010	R40H5519	NR	NR
	Fd	BX		7142 - D225	MD225	R40H5010	R40H5522	NR	NR
	Fd	BX		7142 - D225	MD225	R40H5010	R40H5522	NR	NR
	Fd	BX		7108 - D184	MD184	R40H5010	R40H5519	NR	NR
	Fd	BX		7142 - D225	MD225	R40H5010	R40H5522	NR	NR
	Fd	BX		7108 - D184	MD184	R40H5010	R40H5519	NR	NR
	Fd	BX		7108 - D184	MD184	R40H5010	R40H5519	NR	NR
	Fd	BX		7142 - D225	MD225	R40H5010	R40H5522	NR	NR
	Fd	BX		7108 - D184	MD184	R40H5010	R40H5519	NR	NR
	Fd	BX		7108 - D184	MD184	R40H5010	R40H5519	NR	NR
	Fd	BX		7108 - D184	MD184	R40H5010	R40H5519	NR	NR
	Fd	BX		7108 - D184	MD184	R40H5010	R40H5519	NR	NR
	Fd	BX		7142 - D225	MD225	R40H5010	R40H5522	NR	NR
	Fd	BX		7108 - D184	MD184	R40H5010	R40H5519	NR	NR
	Fd	BX		7108 - D184	MD184	R40H5010	R40H5519	NR	NR
	Fd	BX		7108 - D184	MD184	R40H5010	R40H5519	NR	NR
	Fd	BX		7142 - D225	MD225	R40H5010	R40H5522	NR	NR
	Fd	BX		7142 - D225	MD225	R40H5010	R40H5522	NR	NR
	Fd	BX		7108 - D184	MD184	R40H5010	R40H5519	NR	NR
	Fd	BX		7108 - D184	MD184	R40H5010	R40H5519	NR	NR

37 - Also available as a New unit
266 - 10 Stud, Hat Shaped
269 - 5 Stud, U Shape
72 - Phenolic/Steel Face
267 - 10 Stud, U Shaped
270 - 5 Stud, U Shape, .766 Dia. Studs
201 - Steel Piston
268 - 5 Stud, Hat Shape
271 - 6 Stud, Hat Shape

MERITOR DRUM OR ROTOR NO.	CALIPER OR CYLINDER BORE SIZE	MERITOR CALIPER OR WHEEL CYLINDER (LEFT)	MERITOR CALIPER OR WHEEL CYLINDER (RIGHT)	MERITOR CALIPER OR WHEEL CYLINDER REPAIR KIT	MERITOR CALIPER PISTON	MERITOR MASTER CYLINDER	MERITOR MASTER CYLINDER KIT	MERITOR BRAKE HOSE (LEFT)	MERITOR BRAKE HOSE (RIGHT)
									ITE(Cont.)
									140, 1400, 1452, 1454 SERIES(Cont.)
R44141608[267]	2-7/8 "	R42R55250	R42R55250[37]	R4066365	R4090096[72]	-	-	R4577512	R4577512
R44141608[267]	2-19/32 "	R42R55314	R42R55314[37]	R40107771	R4090100P[72]	-	-	R4577512	R4577512
23-123572-004[271]	2-19/32 "	R42R55314	R42R55314[37]	R40107771	R4090100P[72]	-	-	-	-
R44141858[275]	2-7/8 "	R42R55250	R42R55250[37]	R4066365	R4090096[72]	-	-	-	-
23-122920-002[273]	3-3/8 "	R42R55099	R42R55098[37]	R4066780	R4090021[201]	-	-	-	-
23-122527-002[272]	2-7/8 "	R42R55250	R42R55250[37]	R4066365	R4090096[72]	-	-	-	-
R44141858[275]	3-3/8 "	R42R55099	R42R55098[37]	R4066780	R4090021[201]	-	-	-	-
23-122701-002[269]	3-3/8 "	R42R55099	R42R55098[37]	R4066780	R4090021[201]	-	-	-	-
23-122920-002[273]	2-7/8 "	R42R55250	R42R55250[37]	R4066365	R4090096[72]	-	-	-	-
23-123552-004[266]	2-19/32 "	R42R55314	R42R55314[37]	R40107771	R4090100P[72]	-	-	-	-
23-122701-002[269]	2-7/8 "	R42R55250	R42R55250[37]	R4066365	R4090096[72]	-	-	-	-
R44141476[268]	2-19/32 "	R42R55314	R42R55314[37]	R40107771	R4090100P[72]	-	-	-	-
R44141476[268]	2-7/8 "	R42R55250	R42R55250[37]	R4066365	R4090096[72]	-	-	-	-
23-122701-002[269]	2-19/32 "	R42R55314	R42R55314[37]	R40107771	R4090100P[72]	-	-	-	-
R44141858[275]	2-19/32 "	R42R55314	R42R55314[37]	R40107771	R4090100P[72]	-	-	-	-
23-122920-002[273]	2-19/32 "	R42R55314	R42R55314[37]	R40107771	R4090100P[72]	-	-	-	-
23-123552-004[266]	2-7/8 "	R42R55250	R42R55250[37]	R4066365	R4090096[72]	-	-	-	-
23-123572-004[271]	2-7/8 "	R42R55250	R42R55250[37]	R4066365	R4090096[72]	-	-	-	-
23-122527-002[272]	2-19/32 "	R42R55314	R42R55314[37]	R40107771	R4090100P[72]	-	-	-	-
R44141476[268]	3-3/8 "	R42R55099	R42R55098[37]	R4066780	R4090021[201]	-	-	-	-
23-123552-004[266]	3-3/8 "	R42R55099	R42R55098[37]	R4066780	R4090021[201]	-	-	-	-
23-122527-002[272]	3-3/8 "	R42R55099	R42R55098[37]	R4066780	R4090021[201]	-	-	-	-
23-123572-004[271]	3-3/8 "	R42R55099	R42R55098[37]	R4066780	R4090021[201]	-	-	-	-
R44141629[269]	2-19/32 "	R42R55314	R42R55314[37]	R40107771	R4090100P[72]	-	-	R4577512	R4577512
R44141628[269]	2-7/8 "	R42R55250	R42R55250[37]	R4066365	R4090096[72]	-	-	R4577512	R4577512
23-123552-004[266]	2-19/32 "	R42R55314	R42R55314[37]	R40107771	R4090100P[72]	-	-	R4577512	R4577512
23-123572-004[271]	2-19/32 "	R42R55314	R42R55314[37]	R40107771	R4090100P[72]	-	-	R4577512	R4577512
R44141628[269]	2-19/32 "	R42R55314	R42R55314[37]	R40107771	R4090100P[72]	-	-	R4577512	R4577512
R44141627[270]	2-7/8 "	R42R55250	R42R55250[37]	R4066365	R4090096[72]	-	-	R4577512	R4577512
23-123552-004[266]	2-7/8 "	R42R55250	R42R55250[37]	R4066365	R4090096[72]	-	-	R4577512	R4577512
R44141627[270]	2-19/32 "	R42R55314	R42R55314[37]	R40107771	R4090100P[72]	-	-	R4577512	R4577512
R44141629[269]	2-7/8 "	R42R55250	R42R55250[37]	R4066365	R4090096[72]	-	-	R4577512	R4577512
23-123572-004[271]	2-7/8 "	R42R55250	R42R55250[37]	R4066365	R4090096[72]	-	-	R4577512	R4577512
R44141608[267]	2-7/8 "	R42R55250	R42R55250[37]	R4066365	R4090096[72]	-	-	R4577512	R4577512
R44141608[267]	2-19/32 "	R42R55314	R42R55314[37]	R40107771	R4090100P[72]	-	-	R4577512	R4577512
23-122701-002[269]	3-3/8 "	R42R55099	R42R55098[37]	R4066780	R4090021[201]	-	-	-	-
R44141858[275]	3-3/8 "	R42R55099	R42R55098[37]	R4066780	R4090021[201]	-	-	-	-
23-123572-004[271]	3-3/8 "	R42R55099	R42R55098[37]	R4066780	R4090021[201]	-	-	-	-
23-122701-002[269]	2-7/8 "	R42R55250	R42R55250[37]	R4066365	R4090096[72]	-	-	-	-
R44141858[275]	2-7/8 "	R42R55250	R42R55250[37]	R4066365	R4090096[72]	-	-	-	-
23-123552-004[266]	3-3/8 "	R42R55099	R42R55098[37]	R4066780	R4090021[201]	-	-	-	-
R44141476[268]	2-7/8 "	R42R55250	R42R55250[37]	R4066365	R4090096[72]	-	-	-	-
23-123572-004[271]	2-19/32 "	R42R55314	R42R55314[37]	R40107771	R4090100P[72]	-	-	-	-
R44141476[268]	2-19/32 "	R42R55314	R42R55314[37]	R40107771	R4090100P[72]	-	-	-	-
23-122920-002[273]	2-7/8 "	R42R55250	R42R55250[37]	R4066365	R4090096[72]	-	-	-	-
R44141858[275]	2-19/32 "	R42R55314	R42R55314[37]	R40107771	R4090100P[72]	-	-	-	-
23-122701-002[269]	2-19/32 "	R42R55314	R42R55314[37]	R40107771	R4090100P[72]	-	-	-	-
23-122527-002[272]	3-3/8 "	R42R55099	R42R55098[37]	R4066780	R4090021[201]	-	-	-	-
R44141476[268]	3-3/8 "	R42R55099	R42R55098[37]	R4066780	R4090021[201]	-	-	-	-
23-122527-002[272]	2-7/8 "	R42R55250	R42R55250[37]	R4066365	R4090096[72]	-	-	-	-
23-122920-002[273]	2-19/32 "	R42R55314	R42R55314[37]	R40107771	R4090100P[72]	-	-	-	-
23-122920-002[273]	3-3/8 "	R42R55099	R42R55098[37]	R4066780	R4090021[201]	-	-	-	-
23-123552-004[266]	2-7/8 "	R42R55250	R42R55250[37]	R4066365	R4090096[72]	-	-	-	-
23-123572-004[271]	2-7/8 "	R42R55250	R42R55250[37]	R4066365	R4090096[72]	-	-	-	-
23-122527-002[272]	2-19/32 "	R42R55314	R42R55314[37]	R40107771	R4090100P[72]	-	-	-	-
23-123552-004[266]	2-19/32 "	R42R55314	R42R55314[37]	R40107771	R4090100P[72]	-	-	-	-

272 - 6 Stud, U Shape

273 - 5 Stud, U Shape, .780 Dia. Studs

275 - 5 Stud, U Shape, .656 Dia. Studs

MAKE MODEL YEAR AXLE CODE AXLE WEIGHT	AXLE & BRK. TYPE	BRK. MFG.	BRAKE SIZE	FMSI	MERITOR DISC PAD OR BRAKE SHOE	MERITOR GUIDE PIN OR RETURN SPRING KIT	MERITOR CALIPER HWD. KIT OR RETURN SPRING KIT	MERITOR ADJUSTER KIT (LEFT WHEEL)	MERITOR ADJUSTER KIT (RIGHT WHEEL)
ITE(Cont.)									
140, 1400, 1452, 1454 SERIES(Cont.)									
1985									
	Rd	BX		7108 - D184	MD184	R40H5010	R40H5519	NR	NR
	Rd	BX		7142 - D225	MD225	R40H5010	R40H5522	NR	NR
	Rd	BX		7142 - D225	MD225	R40H5010	R40H5522	NR	NR
	Rd	BX		7108 - D184	MD184	R40H5010	R40H5519	NR	NR
	Rd	BX		7142 - D225	MD225	R40H5010	R40H5522	NR	NR
	Rd	BX		7108 - D184	MD184	R40H5010	R40H5519	NR	NR
	Rd	BX		7108 - D184	MD184	R40H5010	R40H5519	NR	NR
	Rd	BX		7142 - D225	MD225	R40H5010	R40H5522	NR	NR
	Rd	BX		7142 - D225	MD225	R40H5010	R40H5522	NR	NR
	Rd	BX		7108 - D184	MD184	R40H5010	R40H5519	NR	NR
S1400, S1452, S1454 Conventional Series									
14039, 14057	Rd	BX		7108 - D184	MD184	R40H5010	R40H5519	NR	NR
	Rd	BX		7142 - D225	MD225	R40H5010	R40H5522	NR	NR
1984									
S1400, S1452, S1454									
Conventional Series	Fd	BX		7108 - D184	MD184	R40H5010	R40H5519	NR	NR
	Fd	BX		7142 - D225	MD225	R40H5010	R40H5522	NR	NR
	Fd	BX		7108 - D184	MD184	R40H5010	R40H5519	NR	NR
	Fd	BX		7142 - D225	MD225	R40H5010	R40H5522	NR	NR
	Fd	BX		7108 - D184	MD184	R40H5010	R40H5519	NR	NR
	Fd	BX		7108 - D184	MD184	R40H5010	R40H5519	NR	NR
	Fd	BX		7108 - D184	MD184	R40H5010	R40H5519	NR	NR
	Fd	BX		7142 - D225	MD225	R40H5010	R40H5522	NR	NR
	Fd	BX		7108 - D184	MD184	R40H5010	R40H5519	NR	NR
	Fd	BX		7142 - D225	MD225	R40H5010	R40H5522	NR	NR
	Fd	BX		7108 - D184	MD184	R40H5010	R40H5519	NR	NR
	Fd	BX		7108 - D184	MD184	R40H5010	R40H5519	NR	NR
	Fd	BX		7108 - D184	MD184	R40H5010	R40H5519	NR	NR
	Fd	BX		7142 - D225	MD225	R40H5010	R40H5522	NR	NR
	Fd	BX		7108 - D184	MD184	R40H5010	R40H5519	NR	NR
	Fd	BX		7108 - D184	MD184	R40H5010	R40H5519	NR	NR
	Fd	BX		7108 - D184	MD184	R40H5010	R40H5519	NR	NR
	Fd	BX		7142 - D225	MD225	R40H5010	R40H5522	NR	NR
	Fd	BX		7142 - D225	MD225	R40H5010	R40H5522	NR	NR
	Fd	BX		7108 - D184	MD184	R40H5010	R40H5519	NR	NR
	Fd	BX		7108 - D184	MD184	R40H5010	R40H5519	NR	NR
	Rd	BX		7142 - D225	MD225	R40H5010	R40H5522	NR	NR
	Rd	BX		7142 - D225	MD225	R40H5010	R40H5522	NR	NR
	Rd	BX		7108 - D184	MD184	R40H5010	R40H5519	NR	NR
	Rd	BX		7108 - D184	MD184	R40H5010	R40H5519	NR	NR
	Rd	BX		7142 - D225	MD225	R40H5010	R40H5522	NR	NR
	Rd	BX		7108 - D184	MD184	R40H5010	R40H5519	NR	NR
	Rd	BX		7108 - D184	MD184	R40H5010	R40H5519	NR	NR
	Rd	BX		7108 - D184	MD184	R40H5010	R40H5519	NR	NR
	Rd	BX		7142 - D225	MD225	R40H5010	R40H5522	NR	NR
	Rd	BX		7142 - D225	MD225	R40H5010	R40H5522	NR	NR
S1400, S1452, S1454 Conventional Series									
14039, 14057	Rd	BX		7142 - D225	MD225	R40H5010	R40H5522	NR	NR
	Rd	BX		7108 - D184	MD184	R40H5010	R40H5519	NR	NR
150, 1500 SERIES									
1976									
FA28	Fa	WG	14 " x 2-1/2 "	1294A - 325	N/A	R40H521	R40H9237	R40H3502	R40H3503
RA25	Ra	WG	15 " x 5 "	1252 - 346	R700346	R40H597	R40H9200	R40H3540	R40H3541
RA27	Ra	WG	15 " x 4 "	4645A - 376	Discontinued	R40H597	R40H9200	R40H3540	R40H3541
1975									
FA28	Fa	WG	14 " x 2-1/2 "	1294A - 325	N/A	R40H521	R40H9237	R40H3502	R40H3503
RA25	Ra	WG	15 " x 5 "	1252 - 346	R700346	R40H597	R40H9200	R40H3540	R40H3541
RA27	Ra	WG	15 " x 4 "	4645A - 376	Discontinued	R40H597	R40H9200	R40H3540	R40H3541
1974									
FA28	Fa	WG	14 " x 2-1/2 "	1294A - 325	N/A	R40H521	R40H9237	R40H3502	R40H3503
RA25	Ra	WG	15 " x 5 "	1252 - 346	R700346	R40H597	R40H9200	R40H3540	R40H3541

37 - Also available as a New unit
266 - 10 Stud, Hat Shaped
269 - 5 Stud, U Shape
72 - Phenolic/Steel Face
267 - 10 Stud, U Shaped
270 - 5 Stud, U Shape, .766 Dia. Studs
201 - Steel Piston
268 - 5 Stud, Hat Shape
271 - 6 Stud, Hat Shape

MERITOR DRUM OR ROTOR NO.	CALIPER OR CYLINDER BORE SIZE	MERITOR CALIPER OR WHEEL CYLINDER (LEFT)	MERITOR CALIPER OR WHEEL CYLINDER (RIGHT)	MERITOR CALIPER OR WHEEL CYLINDER REPAIR KIT	MERITOR CALIPER PISTON	MERITOR MASTER CYLINDER	MERITOR MASTER CYLINDER KIT	MERITOR BRAKE HOSE (LEFT)	MERITOR BRAKE HOSE (RIGHT)
									ITE(Cont.)
									140, 1400, 1452, 1454 SERIES(Cont.)
R44141628[269]	2-19/32 "	R42R55314	R42R55314[37]	R40107771	R4090100P[72]	-	-	R4577512	R4577512
R44141629[269]	2-7/8 "	R42R55250	R42R55250[37]	R4066365	R4090096[72]	-	-	R4577512	R4577512
23-123572-004[271]	2-7/8 "	R42R55250	R42R55250[37]	R4066365	R4090096[72]	-	-	R4577512	R4577512
R44141627[270]	2-19/32 "	R42R55314	R42R55314[37]	R40107771	R4090100P[72]	-	-	R4577512	R4577512
23-123552-004[266]	2-7/8 "	R42R55250	R42R55250[37]	R4066365	R4090096[72]	-	-	R4577512	R4577512
23-123552-004[266]	2-19/32 "	R42R55314	R42R55314[37]	R40107771	R4090100P[72]	-	-	R4577512	R4577512
23-123572-004[271]	2-19/32 "	R42R55314	R42R55314[37]	R40107771	R4090100P[72]	-	-	R4577512	R4577512
R44141628[269]	2-7/8 "	R42R55250	R42R55250[37]	R4066365	R4090096[72]	-	-	R4577512	R4577512
R44141627[270]	2-7/8 "	R42R55250	R42R55250[37]	R4066365	R4090096[72]	-	-	R4577512	R4577512
R44141629[269]	2-19/32 "	R42R55314	R42R55314[37]	R40107771	R4090100P[72]	-	-	R4577512	R4577512
R44141608[267]	2-19/32 "	R42R55314	R42R55314[37]	R40107771	R4090100P[72]	-	-	R4577512	R4577512
R44141608[267]	2-7/8 "	R42R55250	R42R55250[37]	R4066365	R4090096[72]	-	-	R4577512	R4577512
R44141476[268]	2-19/32 "	R42R55314	R42R55314[37]	R40107771	R4090100P[72]	-	-	-	-
R44141476[268]	2-7/8 "	R42R55250	R42R55250[37]	R4066365	R4090096[72]	-	-	-	-
23-122527-002[272]	2-19/32 "	R42R55314	R42R55314[37]	R40107771	R4090100P[72]	-	-	-	-
23-122920-002[273]	2-7/8 "	R42R55250	R42R55250[37]	R4066365	R4090096[72]	-	-	-	-
23-123572-004[271]	2-19/32 "	R42R55314	R42R55314[37]	R40107771	R4090100P[72]	-	-	-	-
23-122701-002[269]	3-3/8 "	R42R55099	R42R55098[37]	R4066780	R4090021[201]	-	-	-	-
R44141858[275]	3-3/8 "	R42R55099	R42R55098[37]	R4066780	R4090021[201]	-	-	-	-
23-122527-002[272]	2-7/8 "	R42R55250	R42R55250[37]	R4066365	R4090096[72]	-	-	-	-
23-122920-002[273]	3-3/8 "	R42R55099	R42R55098[37]	R4066780	R4090021[201]	-	-	-	-
23-123552-004[266]	2-7/8 "	R42R55250	R42R55250[37]	R4066365	R4090096[72]	-	-	-	-
R44141476[268]	3-3/8 "	R42R55099	R42R55098[37]	R4066780	R4090021[201]	-	-	-	-
23-122920-002[273]	2-19/32 "	R42R55314	R42R55314[37]	R40107771	R4090100P[72]	-	-	-	-
23-123552-004[266]	2-19/32 "	R42R55314	R42R55314[37]	R40107771	R4090100P[72]	-	-	-	-
23-123572-004[271]	2-7/8 "	R42R55250	R42R55250[37]	R4066365	R4090096[72]	-	-	-	-
23-123572-004[271]	3-3/8 "	R42R55099	R42R55098[37]	R4066780	R4090021[201]	-	-	-	-
23-123552-004[266]	3-3/8 "	R42R55099	R42R55098[37]	R4066780	R4090021[201]	-	-	-	-
23-122527-002[272]	3-3/8 "	R42R55099	R42R55098[37]	R4066780	R4090021[201]	-	-	-	-
23-122701-002[269]	2-7/8 "	R42R55250	R42R55250[37]	R4066365	R4090096[72]	-	-	-	-
R44141858[275]	2-7/8 "	R42R55250	R42R55250[37]	R4066365	R4090096[72]	-	-	-	-
23-122701-002[269]	2-19/32 "	R42R55314	R42R55314[37]	R40107771	R4090100P[72]	-	-	-	-
R44141858[275]	2-19/32 "	R42R55314	R42R55314[37]	R40107771	R4090100P[72]	-	-	-	-
R44141629[269]	2-7/8 "	R42R55250	R42R55250[37]	R4066365	R4090096[72]	-	-	R4577512	R4577512
R44141628[269]	2-7/8 "	R42R55250	R42R55250[37]	R4066365	R4090096[72]	-	-	R4577512	R4577512
23-123572-004[271]	2-19/32 "	R42R55314	R42R55314[37]	R40107771	R4090100P[72]	-	-	R4577512	R4577512
R44141629[269]	2-19/32 "	R42R55314	R42R55314[37]	R40107771	R4090100P[72]	-	-	R4577512	R4577512
R44141627[270]	2-7/8 "	R42R55250	R42R55250[37]	R4066365	R4090096[72]	-	-	R4577512	R4577512
23-123552-004[266]	2-19/32 "	R42R55314	R42R55314[37]	R40107771	R4090100P[72]	-	-	R4577512	R4577512
R44141628[269]	2-19/32 "	R42R55314	R42R55314[37]	R40107771	R4090100P[72]	-	-	R4577512	R4577512
R44141627[270]	2-19/32 "	R42R55314	R42R55314[37]	R40107771	R4090100P[72]	-	-	R4577512	R4577512
23-123552-004[266]	2-7/8 "	R42R55250	R42R55250[37]	R4066365	R4090096[72]	-	-	R4577512	R4577512
23-123572-004[271]	2-7/8 "	R42R55250	R42R55250[37]	R4066365	R4090096[72]	-	-	R4577512	R4577512
R44141608[267]	2-7/8 "	R42R55250	R42R55250[37]	R4066365	R4090096[72]	-	-	R4577512	R4577512
R44141608[267]	2-19/32 "	R42R55314	R42R55314[37]	R40107771	R4090100P[72]	-	-	R4577512	R4577512
									150, 1500 SERIES
N/A	1-1/8 "	R4133714	R4133715	R4166926	NR	-	-	-	-
N/A	1-1/2 "	R4133580	R4133580	Discontinued	NR	-	-	-	-
N/A	1-1/2 "	R4133580	R4133580	Discontinued	NR	-	-	-	-
N/A	1-1/8 "	R4133714	R4133715	R4166926	NR	-	-	-	-
N/A	1-1/2 "	R4133580	R4133580	Discontinued	NR	-	-	-	-
N/A	1-1/2 "	R4133580	R4133580	Discontinued	NR	-	-	-	-
N/A	1-1/8 "	R4133714	R4133715	R4166926	NR	-	-	-	-
N/A	1-1/2 "	R4133580	R4133580	Discontinued	NR	-	-	-	-

272 - 6 Stud, U Shape

273 - 5 Stud, U Shape, .780 Dia. Studs

275 - 5 Stud, U Shape, .656 Dia. Studs

MAKE MODEL YEAR AXLE CODE AXLE WEIGHT	AXLE & BRK. TYPE	BRK. MFG.	BRAKE SIZE	FMSI	MERITOR DISC PAD OR BRAKE SHOE	MERITOR GUIDE PIN OR RETURN SPRING KIT	MERITOR CALIPER HWD. KIT OR RETURN SPRING KIT	MERITOR ADJUSTER KIT (LEFT WHEEL)	MERITOR ADJUSTER KIT (RIGHT WHEEL)
ITE(Cont.)									
150, 1500 SERIES(Cont.)									
1974 RA27	Ra	WG	15 " x 4 "	4645A - 376	Discontinued	R40H597	R40H9200	R40H3540	R40H3541
1973 FA28	Fa	WG	14 " x 2-1/2 "	1294A - 325	N/A	R40H521	R40H9237	R40H3502	R40H3503
RA25	Ra	WG	15 " x 5 "	1252 - 346	R700346	R40H597	R40H9200	R40H3540	R40H3541
RA27	Ra	WG	15 " x 4 "	4645A - 376	Discontinued	R40H597	R40H9200	R40H3540	R40H3541
160, 1600, 1650 SERIES									
1995 M1600, M1652, M1654 Metro Series, Forward Control	Fd	BX		7108 - D184	MD184	R40H5010	R40H5519	NR	NR
	Fd	BX		7108 - D184	MD184	R40H5010	R40H5519	NR	NR
	Fd	BX		7108 - D184	MD184	R40H5010	R40H5519	NR	NR
	Fd	BX		7108 - D184	MD184	R40H5010	R40H5519	NR	NR
	Fd	BX		7142 - D225	MD225	R40H5010	R40H5522	NR	NR
	Fd	BX		7142 - D225	MD225	R40H5010	R40H5522	NR	NR
	Fd	BX		7108 - D184	MD184	R40H5010	R40H5519	NR	NR
	Fd	BX		7108 - D184	MD184	R40H5010	R40H5519	NR	NR
	Fd	BX		7142 - D225	MD225	R40H5010	R40H5522	NR	NR
	Fd	BX		7108 - D184	MD184	R40H5010	R40H5519	NR	NR
	Fd	BX		7108 - D184	MD184	R40H5010	R40H5519	NR	NR
	Fd	BX		7142 - D225	MD225	R40H5010	R40H5522	NR	NR
	Rd	BX		7108 - D184	MD184	R40H5010	R40H5519	NR	NR
	Rd	BX		7142 - D225	MD225	R40H5010	R40H5522	NR	NR
	Rd	BX		7108 - D184	MD184	R40H5010	R40H5519	NR	NR
	Rd	BX		7142 - D225	MD225	R40H5010	R40H5522	NR	NR
1994									
	Fd	BX		7142 - D225	MD225	R40H5010	R40H5522	NR	NR
	Fd	BX		7108 - D184	MD184	R40H5010	R40H5519	NR	NR
	Fd	BX		7108 - D184	MD184	R40H5010	R40H5519	NR	NR
	Fd	BX		7142 - D225	MD225	R40H5010	R40H5522	NR	NR
	Fd	BX		7142 - D225	MD225	R40H5010	R40H5522	NR	NR
	Fd	BX		7108 - D184	MD184	R40H5010	R40H5519	NR	NR
	Fd	BX		7108 - D184	MD184	R40H5010	R40H5519	NR	NR
	Fd	BX		7108 - D184	MD184	R40H5010	R40H5519	NR	NR
	Fd	BX		7108 - D184	MD184	R40H5010	R40H5519	NR	NR
	Fd	BX		7108 - D184	MD184	R40H5010	R40H5519	NR	NR
	Fd	BX		7142 - D225	MD225	R40H5010	R40H5522	NR	NR
	Fd	BX		7108 - D184	MD184	R40H5010	R40H5519	NR	NR
	Rd	BX		7142 - D225	MD225	R40H5010	R40H5522	NR	NR
	Rd	BX		7142 - D225	MD225	R40H5010	R40H5522	NR	NR
	Rd	BX		7108 - D184	MD184	R40H5010	R40H5519	NR	NR
	Rd	BX		7108 - D184	MD184	R40H5010	R40H5519	NR	NR
1993									
	Fd	BX		7108 - D184	MD184	R40H5010	R40H5519	NR	NR
	Fd	BX		7142 - D225	MD225	R40H5010	R40H5522	NR	NR
	Fd	BX		7108 - D184	MD184	R40H5010	R40H5519	NR	NR
	Fd	BX		7142 - D225	MD225	R40H5010	R40H5522	NR	NR
	Fd	BX		7108 - D184	MD184	R40H5010	R40H5519	NR	NR
	Fd	BX		7108 - D184	MD184	R40H5010	R40H5519	NR	NR
	Fd	BX		7108 - D184	MD184	R40H5010	R40H5519	NR	NR
	Fd	BX		7142 - D225	MD225	R40H5010	R40H5522	NR	NR
	Fd	BX		7108 - D184	MD184	R40H5010	R40H5519	NR	NR
	Fd	BX		7108 - D184	MD184	R40H5010	R40H5519	NR	NR
	Fd	BX		7142 - D225	MD225	R40H5010	R40H5522	NR	NR
	Fd	BX		7108 - D184	MD184	R40H5010	R40H5519	NR	NR
	Rd	BX		7108 - D184	MD184	R40H5010	R40H5519	NR	NR
	Rd	BX		7142 - D225	MD225	R40H5010	R40H5522	NR	NR
	Rd	BX		7108 - D184	MD184	R40H5010	R40H5519	NR	NR
	Rd	BX		7142 - D225	MD225	R40H5010	R40H5522	NR	NR
1992									
	Fd	BX		7108 - D184	MD184	R40H5010	R40H5519	NR	NR
	Fd	BX		7108 - D184	MD184	R40H5010	R40H5519	NR	NR
	Fd	BX		7142 - D225	MD225	R40H5010	R40H5522	NR	NR
	Fd	BX		7108 - D184	MD184	R40H5010	R40H5519	NR	NR

37 - Also available as a New unit
266 - 10 Stud, Hat Shaped
273 - 5 Stud, U Shape, .780 Dia. Studs
72 - Phenolic/Steel Face
268 - 5 Stud, Hat Shape
201 - Steel Piston
271 - 6 Stud, Hat Shape

MERITOR DRUM OR ROTOR NO.	CALIPER OR CYLINDER BORE SIZE	MERITOR CALIPER OR WHEEL CYLINDER (LEFT)	MERITOR CALIPER OR WHEEL CYLINDER (RIGHT)	MERITOR CALIPER OR WHEEL CYLINDER REPAIR KIT	MERITOR CALIPER PISTON	MERITOR MASTER CYLINDER	MERITOR MASTER CYLINDER KIT	MERITOR BRAKE HOSE (LEFT)	MERITOR BRAKE HOSE (RIGHT)
									ITE(Cont.)
									150, 1500 SERIES(Cont.)
N/A	1-1/2 "	R4133580	R4133580	Discontinued	NR	-	-	-	-
N/A	1-1/8 "	R4133714	R4133715	R4166926	NR	-	-	-	-
N/A	1-1/2 "	R4133580	R4133580	Discontinued	NR	-	-	-	-
N/A	1-1/2 "	R4133580	R4133580	Discontinued	NR	-	-	-	-
									160, 1600, 1650 SERIES
23-123552-004[266]	3-3/8 "	R42R55099	R42R55098[37]	R4066780	R4090021[201]	-	-	-	-
23-122920-002[273]	2-19/32 "	R42R55314	R42R55314[37]	R40107771	R4090100P[72]	-	-	-	-
R44141476[268]	3-3/8 "	R42R55099	R42R55098[37]	R4066780	R4090021[201]	-	-	-	-
R44141476[268]	2-19/32 "	R42R55314	R42R55314[37]	R40107771	R4090100P[72]	-	-	-	-
23-123572-004[271]	2-7/8 "	R42R55250	R42R55250[37]	R4066365	R4090096[72]	-	-	-	-
23-122920-002[273]	2-7/8 "	R42R55250	R42R55250[37]	R4066365	R4090096[72]	-	-	-	-
23-122920-002[273]	3-3/8 "	R42R55099	R42R55098[37]	R4066780	R4090021[201]	-	-	-	-
23-123572-004[271]	3-3/8 "	R42R55099	R42R55098[37]	R4066780	R4090021[201]	-	-	-	-
23-123552-004[266]	2-7/8 "	R42R55250	R42R55250[37]	R4066365	R4090096[72]	-	-	-	-
23-123552-004[266]	2-19/32 "	R42R55314	R42R55314[37]	R40107771	R4090100P[72]	-	-	-	-
23-123572-004[271]	2-19/32 "	R42R55314	R42R55314[37]	R40107771	R4090100P[72]	-	-	-	-
R44141476[268]	2-7/8 "	R42R55250	R42R55250[37]	R4066365	R4090096[72]	-	-	-	-
23-123552-004[266]	2-19/32 "	R42R55314	R42R55314[37]	R40107771	R4090100P[72]	-	-	-	-
23-123572-004[271]	2-7/8 "	R42R55250	R42R55250[37]	R4066365	R4090096[72]	-	-	-	-
23-123572-004[271]	2-19/32 "	R42R55314	R42R55314[37]	R40107771	R4090100P[72]	-	-	-	-
23-123552-004[266]	2-7/8 "	R42R55250	R42R55250[37]	R4066365	R4090096[72]	-	-	-	-
23-122920-002[273]	2-7/8 "	R42R55250	R42R55250[37]	R4066365	R4090096[72]	-	-	-	-
23-123552-004[266]	3-3/8 "	R42R55099	R42R55098[37]	R4066780	R4090021[201]	-	-	-	-
23-123572-004[271]	2-19/32 "	R42R55314	R42R55314[37]	R40107771	R4090100P[72]	-	-	-	-
23-123572-004[271]	2-7/8 "	R42R55250	R42R55250[37]	R4066365	R4090096[72]	-	-	-	-
R44141476[268]	2-7/8 "	R42R55250	R42R55250[37]	R4066365	R4090096[72]	-	-	-	-
R44141476[268]	3-3/8 "	R42R55099	R42R55098[37]	R4066780	R4090021[201]	-	-	-	-
23-122920-002[273]	2-19/32 "	R42R55314	R42R55314[37]	R40107771	R4090100P[72]	-	-	-	-
23-122920-002[273]	3-3/8 "	R42R55099	R42R55098[37]	R4066780	R4090021[201]	-	-	-	-
23-123572-004[271]	3-3/8 "	R42R55099	R42R55098[37]	R4066780	R4090021[201]	-	-	-	-
23-123552-004[266]	2-19/32 "	R42R55314	R42R55314[37]	R40107771	R4090100P[72]	-	-	-	-
23-123552-004[266]	2-7/8 "	R42R55250	R42R55250[37]	R4066365	R4090096[72]	-	-	-	-
R44141476[268]	2-19/32 "	R42R55314	R42R55314[37]	R40107771	R4090100P[72]	-	-	-	-
23-123572-004[271]	2-7/8 "	R42R55250	R42R55250[37]	R4066365	R4090096[72]	-	-	R4577512	R4577512
23-123552-004[266]	2-7/8 "	R42R55250	R42R55250[37]	R4066365	R4090096[72]	-	-	R4577512	R4577512
23-123552-004[266]	2-19/32 "	R42R55314	R42R55314[37]	R40107771	R4090100P[72]	-	-	R4577512	R4577512
23-123572-004[271]	2-19/32 "	R42R55314	R42R55314[37]	R40107771	R4090100P[72]	-	-	R4577512	R4577512
23-122920-002[273]	3-3/8 "	R42R55099	R42R55098[37]	R4066780	R4090021[201]	-	-	-	-
R44141476[268]	2-7/8 "	R42R55250	R42R55250[37]	R4066365	R4090096[72]	-	-	-	-
23-123552-004[266]	2-19/32 "	R42R55314	R42R55314[37]	R40107771	R4090100P[72]	-	-	-	-
23-122920-002[273]	2-7/8 "	R42R55250	R42R55250[37]	R4066365	R4090096[72]	-	-	-	-
R44141476[268]	2-19/32 "	R42R55314	R42R55314[37]	R40107771	R4090100P[72]	-	-	-	-
R44141476[268]	3-3/8 "	R42R55099	R42R55098[37]	R4066780	R4090021[201]	-	-	-	-
23-123572-004[271]	2-19/32 "	R42R55314	R42R55314[37]	R40107771	R4090100P[72]	-	-	-	-
23-123552-004[266]	2-7/8 "	R42R55250	R42R55250[37]	R4066365	R4090096[72]	-	-	-	-
23-123552-004[266]	3-3/8 "	R42R55099	R42R55098[37]	R4066780	R4090021[201]	-	-	-	-
23-123572-004[271]	3-3/8 "	R42R55099	R42R55098[37]	R4066780	R4090021[201]	-	-	-	-
23-123572-004[271]	2-7/8 "	R42R55250	R42R55250[37]	R4066365	R4090096[72]	-	-	-	-
23-122920-002[273]	2-19/32 "	R42R55314	R42R55314[37]	R40107771	R4090100P[72]	-	-	-	-
23-123572-004[271]	2-19/32 "	R42R55314	R42R55314[37]	R40107771	R4090100P[72]	-	-	R4577512	R4577512
23-123552-004[266]	2-7/8 "	R42R55250	R42R55250[37]	R4066365	R4090096[72]	-	-	R4577512	R4577512
23-123552-004[266]	2-19/32 "	R42R55314	R42R55314[37]	R40107771	R4090100P[72]	-	-	R4577512	R4577512
23-123572-004[271]	2-7/8 "	R42R55250	R42R55250[37]	R4066365	R4090096[72]	-	-	R4577512	R4577512
23-123572-004[271]	2-19/32 "	R42R55314	R42R55314[37]	R40107771	R4090100P[72]	-	-	-	-
R44141476[268]	2-19/32 "	R42R55314	R42R55314[37]	R40107771	R4090100P[72]	-	-	-	-
23-123552-004[266]	2-7/8 "	R42R55250	R42R55250[37]	R4066365	R4090096[72]	-	-	-	-
23-122920-002[273]	2-19/32 "	R42R55314	R42R55314[37]	R40107771	R4090100P[72]	-	-	-	-

MAKE MODEL YEAR AXLE CODE AXLE WEIGHT	AXLE & BRK. TYPE	BRK. MFG.	BRAKE SIZE	FMSI	MERITOR DISC PAD OR BRAKE SHOE	MERITOR GUIDE PIN OR RETURN SPRING KIT	MERITOR CALIPER HWD. KIT OR RETURN SPRING KIT	MERITOR ADJUSTER KIT (LEFT WHEEL)	MERITOR ADJUSTER KIT (RIGHT WHEEL)
ITE(Cont.)									
160, 1600, 1650 SERIES(Cont.)									
1992									
	Fd	BX		7108 - D184	MD184	R40H5010	R40H5519	NR	NR
	Fd	BX		7108 - D184	MD184	R40H5010	R40H5519	NR	NR
	Fd	BX		7142 - D225	MD225	R40H5010	R40H5522	NR	NR
	Fd	BX		7142 - D225	MD225	R40H5010	R40H5522	NR	NR
	Fd	BX		7108 - D184	MD184	R40H5010	R40H5519	NR	NR
	Fd	BX		7142 - D225	MD225	R40H5010	R40H5522	NR	NR
	Fd	BX		7108 - D184	MD184	R40H5010	R40H5519	NR	NR
	Fd	BX		7108 - D184	MD184	R40H5010	R40H5519	NR	NR
	Rd	BX		7142 - D225	MD225	R40H5010	R40H5522	NR	NR
	Rd	BX		7142 - D225	MD225	R40H5010	R40H5522	NR	NR
	Rd	BX		7108 - D184	MD184	R40H5010	R40H5519	NR	NR
	Rd	BX		7108 - D184	MD184	R40H5010	R40H5519	NR	NR
1991									
	Fd	BX		7142 - D225	MD225	R40H5010	R40H5522	NR	NR
	Fd	BX		7108 - D184	MD184	R40H5010	R40H5519	NR	NR
	Fd	BX		7108 - D184	MD184	R40H5010	R40H5519	NR	NR
	Fd	BX		7108 - D184	MD184	R40H5010	R40H5519	NR	NR
	Fd	BX		7108 - D184	MD184	R40H5010	R40H5519	NR	NR
	Fd	BX		7108 - D184	MD184	R40H5010	R40H5519	NR	NR
	Fd	BX		7142 - D225	MD225	R40H5010	R40H5522	NR	NR
	Fd	BX		7142 - D225	MD225	R40H5010	R40H5522	NR	NR
	Fd	BX		7108 - D184	MD184	R40H5010	R40H5519	NR	NR
	Fd	BX		7108 - D184	MD184	R40H5010	R40H5519	NR	NR
	Fd	BX		7108 - D184	MD184	R40H5010	R40H5519	NR	NR
	Fd	BX		7142 - D225	MD225	R40H5010	R40H5522	NR	NR
	Rd	BX		7108 - D184	MD184	R40H5010	R40H5519	NR	NR
	Rd	BX		7108 - D184	MD184	R40H5010	R40H5519	NR	NR
	Rd	BX		7142 - D225	MD225	R40H5010	R40H5522	NR	NR
	Rd	BX		7142 - D225	MD225	R40H5010	R40H5522	NR	NR
1990									
	Fd	BX		7108 - D184	MD184	R40H5010	R40H5519	NR	NR
	Fd	BX		7108 - D184	MD184	R40H5010	R40H5519	NR	NR
	Fd	BX		7108 - D184	MD184	R40H5010	R40H5519	NR	NR
	Fd	BX		7142 - D225	MD225	R40H5010	R40H5522	NR	NR
	Fd	BX		7108 - D184	MD184	R40H5010	R40H5519	NR	NR
	Fd	BX		7108 - D184	MD184	R40H5010	R40H5519	NR	NR
	Fd	BX		7142 - D225	MD225	R40H5010	R40H5522	NR	NR
	Fd	BX		7108 - D184	MD184	R40H5010	R40H5519	NR	NR
	Fd	BX		7142 - D225	MD225	R40H5010	R40H5522	NR	NR
	Fd	BX		7142 - D225	MD225	R40H5010	R40H5522	NR	NR
	Fd	BX		7108 - D184	MD184	R40H5010	R40H5519	NR	NR
	Fd	BX		7142 - D225	MD225	R40H5010	R40H5522	NR	NR
	Fd	BX		7108 - D184	MD184	R40H5010	R40H5519	NR	NR
	Fd	BX		7108 - D184	MD184	R40H5010	R40H5519	NR	NR
	Rd	BX		7142 - D225	MD225	R40H5010	R40H5522	NR	NR
	Rd	BX		7108 - D184	MD184	R40H5010	R40H5519	NR	NR
	Rd	BX		7142 - D225	MD225	R40H5010	R40H5522	NR	NR
	Rd	BX		7108 - D184	MD184	R40H5010	R40H5519	NR	NR
1989 C1610, C1650 Cargostar Tilt Cab	Fd	BX		7142 - D225	MD225	R40H5010	R40H5522	NR	NR
	Fd	BX		7108 - D184	MD184	R40H5010	R40H5519	NR	NR
	Rd	BX		7142 - D225	MD225	R40H5010	R40H5522	NR	NR
M1600, M1652, M1654 Metro Series, Forward Control	Fd	BX		7108 - D184	MD184	R40H5010	R40H5519	NR	NR
	Fd	BX		7108 - D184	MD184	R40H5010	R40H5519	NR	NR
	Fd	BX		7142 - D225	MD225	R40H5010	R40H5522	NR	NR
	Fd	BX		7142 - D225	MD225	R40H5010	R40H5522	NR	NR
	Fd	BX		7108 - D184	MD184	R40H5010	R40H5519	NR	NR
	Fd	BX		7142 - D225	MD225	R40H5010	R40H5522	NR	NR
	Fd	BX		7108 - D184	MD184	R40H5010	R40H5519	NR	NR
	Fd	BX		7108 - D184	MD184	R40H5010	R40H5519	NR	NR
	Fd	BX		7108 - D184	MD184	R40H5010	R40H5519	NR	NR

37 - Also available as a New unit
201 - Steel Piston
268 - 5 Stud, Hat Shape
53 - Power Brakes
266 - 10 Stud, Hat Shaped
269 - 5 Stud, U Shape
72 - Phenolic/Steel Face
267 - 10 Stud, U Shaped
271 - 6 Stud, Hat Shape

MERITOR DRUM OR ROTOR NO.	CALIPER OR CYLINDER BORE SIZE	MERITOR CALIPER OR WHEEL CYLINDER (LEFT)	MERITOR CALIPER OR WHEEL CYLINDER (RIGHT)	MERITOR CALIPER OR WHEEL CYLINDER REPAIR KIT	MERITOR CALIPER PISTON	MERITOR MASTER CYLINDER	MERITOR MASTER CYLINDER KIT	MERITOR BRAKE HOSE (LEFT)	MERITOR BRAKE HOSE (RIGHT)
ITE(Cont.)									
160, 1600, 1650 SERIES(Cont.)									
23-122920-002[273]	3-3/8 "	R42R55099	R42R55098[37]	R4066780	R4090021[201]	-	-	-	-
R44141476[268]	3-3/8 "	R42R55099	R42R55098[37]	R4066780	R4090021[201]	-	-	-	-
23-122920-002[273]	2-7/8 "	R42R55250	R42R55250[37]	R4066365	R4090096[72]	-	-	-	-
R44141476[268]	2-7/8 "	R42R55250	R42R55250[37]	R4066365	R4090096[72]	-	-	-	-
23-123552-004[266]	3-3/8 "	R42R55099	R42R55098[37]	R4066780	R4090021[201]	-	-	-	-
23-123572-004[271]	2-7/8 "	R42R55250	R42R55250[37]	R4066365	R4090096[72]	-	-	-	-
23-123552-004[266]	2-19/32 "	R42R55314	R42R55314[37]	R40107771	R4090100P[72]	-	-	-	-
23-123572-004[271]	3-3/8 "	R42R55099	R42R55098[37]	R4066780	R4090021[201]	-	-	-	-
23-123552-004[266]	2-7/8 "	R42R55250	R42R55250[37]	R4066365	R4090096[72]	-	-	R4577512	R4577512
23-123572-004[271]	2-7/8 "	R42R55250	R42R55250[37]	R4066365	R4090096[72]	-	-	R4577512	R4577512
23-123572-004[271]	2-19/32 "	R42R55314	R42R55314[37]	R40107771	R4090100P[72]	-	-	R4577512	R4577512
23-123552-004[266]	2-19/32 "	R42R55314	R42R55314[37]	R40107771	R4090100P[72]	-	-	R4577512	R4577512
23-122920-002[273]	2-7/8 "	R42R55250	R42R55250[37]	R4066365	R4090096[72]	-	-	-	-
R44141476[268]	3-3/8 "	R42R55099	R42R55098[37]	R4066780	R4090021[201]	-	-	-	-
23-123572-004[271]	2-19/32 "	R42R55314	R42R55314[37]	R40107771	R4090100P[72]	-	-	-	-
23-123572-004[271]	3-3/8 "	R42R55099	R42R55098[37]	R4066780	R4090021[201]	-	-	-	-
23-123552-004[266]	2-19/32 "	R42R55314	R42R55314[37]	R40107771	R4090100P[72]	-	-	-	-
R44141476[268]	2-19/32 "	R42R55314	R42R55314[37]	R40107771	R4090100P[72]	-	-	-	-
R44141476[268]	2-7/8 "	R42R55250	R42R55250[37]	R4066365	R4090096[72]	-	-	-	-
23-123552-004[266]	2-7/8 "	R42R55250	R42R55250[37]	R4066365	R4090096[72]	-	-	-	-
23-122920-002[273]	2-19/32 "	R42R55314	R42R55314[37]	R40107771	R4090100P[72]	-	-	-	-
23-122920-002[273]	3-3/8 "	R42R55099	R42R55098[37]	R4066780	R4090021[201]	-	-	-	-
23-123552-004[266]	3-3/8 "	R42R55099	R42R55098[37]	R4066780	R4090021[201]	-	-	-	-
23-123572-004[271]	2-7/8 "	R42R55250	R42R55250[37]	R4066365	R4090096[72]	-	-	-	-
23-123552-004[266]	2-19/32 "	R42R55314	R42R55314[37]	R40107771	R4090100P[72]	-	-	R4577512	R4577512
23-123572-004[271]	2-19/32 "	R42R55314	R42R55314[37]	R40107771	R4090100P[72]	-	-	R4577512	R4577512
23-123572-004[271]	2-7/8 "	R42R55250	R42R55250[37]	R4066365	R4090096[72]	-	-	R4577512	R4577512
23-123552-004[266]	2-7/8 "	R42R55250	R42R55250[37]	R4066365	R4090096[72]	-	-	R4577512	R4577512
23-122920-002[273]	3-3/8 "	R42R55099	R42R55098[37]	R4066780	R4090021[201]	-	-	-	-
R44141476[268]	2-19/32 "	R42R55314	R42R55314[37]	R40107771	R4090100P[72]	-	-	-	-
R44141476[268]	3-3/8 "	R42R55099	R42R55098[37]	R4066780	R4090021[201]	-	-	-	-
23-122920-002[273]	2-7/8 "	R42R55250	R42R55250[37]	R4066365	R4090096[72]	-	-	-	-
23-122920-002[273]	2-19/32 "	R42R55314	R42R55314[37]	R40107771	R4090100P[72]	-	-	-	-
23-123572-004[271]	3-3/8 "	R42R55099	R42R55098[37]	R4066780	R4090021[201]	-	-	-	-
R44141608[267]	2-7/8 "	R42R55250	R42R55250[37]	R4066365	R4090096[72]	-	-	-	-
23-123552-004[266]	3-3/8 "	R42R55099	R42R55098[37]	R4066780	R4090021[201]	-	-	-	-
23-123572-004[271]	2-7/8 "	R42R55250	R42R55250[37]	R4066365	R4090096[72]	-	-	-	-
R44141476[268]	2-7/8 "	R42R55250	R42R55250[37]	R4066365	R4090096[72]	-	-	-	-
R44141608[267]	2-19/32 "	R42R55314	R42R55314[37]	R40107771	R4090100P[72]	-	-	-	-
23-123552-004[266]	2-7/8 "	R42R55250	R42R55250[37]	R4066365	R4090096[72]	-	-	-	-
23-123572-004[271]	2-19/32 "	R42R55314	R42R55314[37]	R40107771	R4090100P[72]	-	-	-	-
23-123552-004[266]	2-19/32 "	R42R55314	R42R55314[37]	R40107771	R4090100P[72]	-	-	-	-
23-123552-004[266]	2-7/8 "	R42R55250	R42R55250[37]	R4066365	R4090096[72]	-	-	R4577512	R4577512
23-123572-004[271]	2-19/32 "	R42R55314	R42R55314[37]	R40107771	R4090100P[72]	-	-	R4577512	R4577512
23-123572-004[271]	2-7/8 "	R42R55250	R42R55250[37]	R4066365	R4090096[72]	-	-	R4577512	R4577512
23-123552-004[266]	2-19/32 "	R42R55314	R42R55314[37]	R40107771	R4090100P[72]	-	-	R4577512	R4577512
23-122701-002[269]	2-7/8 "	R42R55250	R42R55250[37]	R4066365	R4090096[72]	-	-	-	-
23-122527-002[272]	2-19/32 "	R42R55314	R42R55314[37]	R40107771	R4090100P[72]	N/A[53]	-	-	-
23-122527-002[272]	2-7/8 "	R42R55250	R42R55250[37]	R4066365	R4090096[72]	-	-	-	-
23-123572-004[271]	3-3/8 "	R42R55099	R42R55098[37]	R4066780	R4090021[201]	-	-	-	-
23-122920-002[273]	2-19/32 "	R42R55314	R42R55314[37]	R40107771	R4090100P[72]	-	-	-	-
R44141608[267]	2-7/8 "	R42R55250	R42R55250[37]	R4066365	R4090096[72]	-	-	-	-
R44141476[268]	2-7/8 "	R42R55250	R42R55250[37]	R4066365	R4090096[72]	-	-	-	-
23-123552-004[266]	3-3/8 "	R42R55099	R42R55098[37]	R4066780	R4090021[201]	-	-	-	-
23-122920-002[273]	2-7/8 "	R42R55250	R42R55250[37]	R4066365	R4090096[72]	-	-	-	-
23-123572-004[271]	2-19/32 "	R42R55314	R42R55314[37]	R40107771	R4090100P[72]	-	-	-	-
R44141476[268]	2-19/32 "	R42R55314	R42R55314[37]	R40107771	R4090100P[72]	-	-	-	-
R44141476[268]	3-3/8 "	R42R55099	R42R55098[37]	R4066780	R4090021[201]	-	-	-	-

272 - 6 Stud, U Shape

273 - 5 Stud, U Shape, .780 Dia. Studs

MAKE MODEL YEAR AXLE CODE AXLE WEIGHT	AXLE & BRK. TYPE	BRK. MFG.	BRAKE SIZE	FMSI	MERITOR DISC PAD OR BRAKE SHOE	MERITOR GUIDE PIN OR RETURN SPRING KIT	MERITOR CALIPER HWD. KIT OR RETURN SPRING KIT	MERITOR ADJUSTER KIT (LEFT WHEEL)	MERITOR ADJUSTER KIT (RIGHT WHEEL)
ITE(Cont.)									
160, 1600, 1650 SERIES(Cont.)									
1989									
	Fd	BX		7108 - D184	MD184	R40H5010	R40H5519	NR	NR
	Fd	BX		7108 - D184	MD184	R40H5010	R40H5519	NR	NR
	Fd	BX		7142 - D225	MD225	R40H5010	R40H5522	NR	NR
	Fd	BX		7142 - D225	MD225	R40H5010	R40H5522	NR	NR
	Fd	BX		7108 - D184	MD184	R40H5010	R40H5519	NR	NR
	Rd	BX		7142 - D225	MD225	R40H5010	R40H5522	NR	NR
	Rd	BX		7108 - D184	MD184	R40H5010	R40H5519	NR	NR
	Rd	BX		7108 - D184	MD184	R40H5010	R40H5519	NR	NR
	Rd	BX		7142 - D225	MD225	R40H5010	R40H5522	NR	NR
S1600, S1652, S1654 Conventional									
	Fd	BX		7142 - D225	MD225	R40H5010	R40H5522	NR	NR
	Fd	BX		7142 - D225	MD225	R40H5010	R40H5522	NR	NR
	Fd	BX		7108 - D184	MD184	R40H5010	R40H5519	NR	NR
	Fd	BX		7108 - D184	MD184	R40H5010	R40H5519	NR	NR
	Fd	BX		7142 - D225	MD225	R40H5010	R40H5522	NR	NR
	Fd	BX		7108 - D184	MD184	R40H5010	R40H5519	NR	NR
	Fd	BX		7142 - D225	MD225	R40H5010	R40H5522	NR	NR
	Fd	BX		7108 - D184	MD184	R40H5010	R40H5519	NR	NR
	Fd	BX		7108 - D184	MD184	R40H5010	R40H5519	NR	NR
	Fd	BX		7108 - D184	MD184	R40H5010	R40H5519	NR	NR
	Fd	BX		7108 - D184	MD184	R40H5010	R40H5519	NR	NR
	Fd	BX		7108 - D184	MD184	R40H5010	R40H5519	NR	NR
	Fd	BX		7142 - D225	MD225	R40H5010	R40H5522	NR	NR
	Fd	BX		7108 - D184	MD184	R40H5010	R40H5519	NR	NR
	Fd	BX		7108 - D184	MD184	R40H5010	R40H5519	NR	NR
	Fd	BX		7108 - D184	MD184	R40H5010	R40H5519	NR	NR
	Fd	BX		7108 - D184	MD184	R40H5010	R40H5519	NR	NR
	Fd	BX		7142 - D225	MD225	R40H5010	R40H5522	NR	NR
	Fd	BX		7108 - D184	MD184	R40H5010	R40H5519	NR	NR
	Fd	BX		7108 - D184	MD184	R40H5010	R40H5519	NR	NR
	Fd	BX		7108 - D184	MD184	R40H5010	R40H5519	NR	NR
	Fd	BX		7142 - D225	MD225	R40H5010	R40H5522	NR	NR
	Rd	BX		7108 - D184	MD184	R40H5010	R40H5519	NR	NR
	Rd	BX		7142 - D225	MD225	R40H5010	R40H5522	NR	NR
	Rd	BX		7108 - D184	MD184	R40H5010	R40H5519	NR	NR
	Rd	BX		7142 - D225	MD225	R40H5010	R40H5522	NR	NR
	Rd	BX		7108 - D184	MD184	R40H5010	R40H5519	NR	NR
	Rd	BX		7108 - D184	MD184	R40H5010	R40H5519	NR	NR
	Rd	BX		7142 - D225	MD225	R40H5010	R40H5522	NR	NR
	Rd	BX		7108 - D184	MD184	R40H5010	R40H5519	NR	NR
	Rd	BX		7142 - D225	MD225	R40H5010	R40H5522	NR	NR
	Rd	BX		7108 - D184	MD184	R40H5010	R40H5519	NR	NR
	Rd	BX		7142 - D225	MD225	R40H5010	R40H5522	NR	NR
	Rd	BX		7142 - D225	MD225	R40H5010	R40H5522	NR	NR
1988 C1610, C1650 Cargostar Tilt Cab									
	Fd	BX		7108 - D184	MD184	R40H5010	R40H5519	NR	NR
	Fd	BX		7142 - D225	MD225	R40H5010	R40H5522	NR	NR
	Rd	BX		7142 - D225	MD225	R40H5010	R40H5522	NR	NR
M1600, M1652, M1654 Metro Series, Forward Control									
	Fd	BX		7108 - D184	MD184	R40H5010	R40H5519	NR	NR
	Fd	BX		7108 - D184	MD184	R40H5010	R40H5519	NR	NR
	Fd	BX		7108 - D184	MD184	R40H5010	R40H5519	NR	NR
	Fd	BX		7142 - D225	MD225	R40H5010	R40H5522	NR	NR
	Fd	BX		7108 - D184	MD184	R40H5010	R40H5519	NR	NR
	Fd	BX		7108 - D184	MD184	R40H5010	R40H5519	NR	NR
	Fd	BX		7108 - D184	MD184	R40H5010	R40H5519	NR	NR
	Fd	BX		7108 - D184	MD184	R40H5010	R40H5519	NR	NR
	Fd	BX		7108 - D184	MD184	R40H5010	R40H5519	NR	NR
	Fd	BX		7142 - D225	MD225	R40H5010	R40H5522	NR	NR
	Fd	BX		7108 - D184	MD184	R40H5010	R40H5519	NR	NR
	Fd	BX		7142 - D225	MD225	R40H5010	R40H5522	NR	NR
	Fd	BX		7142 - D225	MD225	R40H5010	R40H5522	NR	NR
	Fd	BX		7142 - D225	MD225	R40H5010	R40H5522	NR	NR

37 - Also available as a New unit
201 - Steel Piston
268 - 5 Stud, Hat Shape

53 - Power Brakes
266 - 10 Stud, Hat Shaped
269 - 5 Stud, U Shape

72 - Phenolic/Steel Face
267 - 10 Stud, U Shaped
270 - 5 Stud, U Shape, .766 Dia. Studs

MERITOR DRUM OR ROTOR NO.	CALIPER OR CYLINDER BORE SIZE	MERITOR CALIPER OR WHEEL CYLINDER (LEFT)	MERITOR CALIPER OR WHEEL CYLINDER (RIGHT)	MERITOR CALIPER OR WHEEL CYLINDER REPAIR KIT	MERITOR CALIPER PISTON	MERITOR MASTER CYLINDER	MERITOR MASTER CYLINDER KIT	MERITOR BRAKE HOSE (LEFT)	MERITOR BRAKE HOSE (RIGHT)
									ITE(Cont.)
									160, 1600, 1650 SERIES(Cont.)
23-123552-004[266]	2-19/32 "	R42R55314	R42R55314[37]	R40107771	R4090100P[72]	-	-	-	-
R44141608[267]	2-19/32 "	R42R55314	R42R55314[37]	R40107771	R4090100P[72]	-	-	-	-
23-123572-004[271]	2-7/8 "	R42R55250	R42R55250[37]	R4066365	R4090096[72]	-	-	-	-
23-123552-004[266]	2-7/8 "	R42R55250	R42R55250[37]	R4066365	R4090096[72]	-	-	-	-
23-122920-002[273]	3-3/8 "	R42R55099	R42R55098[37]	R4066780	R4090021[201]	-	-	-	-
23-123552-004[266]	2-7/8 "	R42R55250	R42R55250[37]	R4066365	R4090096[72]	-	-	R4577512	R4577512
23-123552-004[266]	2-19/32 "	R42R55314	R42R55314[37]	R40107771	R4090100P[72]	-	-	R4577512	R4577512
23-123572-004[271]	2-19/32 "	R42R55314	R42R55314[37]	R40107771	R4090100P[72]	-	-	R4577512	R4577512
23-123572-004[271]	2-7/8 "	R42R55250	R42R55250[37]	R4066365	R4090096[72]	-	-	R4577512	R4577512
R44141858[275]	2-7/8 "	R42R55250	R42R55250[37]	R4066365	R4090096[72]	-	-	-	-
R44141476[268]	2-7/8 "	R42R55250	R42R55250[37]	R4066365	R4090096[72]	-	-	-	-
23-123552-004[266]	2-19/32 "	R42R55314	R42R55314[37]	R40107771	R4090100P[72]	-	-	-	-
23-123552-004[266]	3-3/8 "	R42R55099	R42R55098[37]	R4066780	R4090021[201]	-	-	-	-
23-123572-004[271]	2-7/8 "	R42R55250	R42R55250[37]	R4066365	R4090096[72]	-	-	-	-
23-122920-002[273]	3-3/8 "	R42R55099	R42R55098[37]	R4066780	R4090021[201]	-	-	-	-
23-122701-002[269]	2-7/8 "	R42R55250	R42R55250[37]	R4066365	R4090096[72]	-	-	-	-
23-122701-002[269]	3-3/8 "	R42R55099	R42R55098[37]	R4066780	R4090021[201]	-	-	-	-
R44141476[268]	2-19/32 "	R42R55314	R42R55314[37]	R40107771	R4090100P[72]	-	-	-	-
23-122701-002[269]	2-19/32 "	R42R55314	R42R55314[37]	R40107771	R4090100P[72]	-	-	-	-
23-123572-004[271]	3-3/8 "	R42R55099	R42R55098[37]	R4066780	R4090021[201]	-	-	-	-
23-122527-002[272]	3-3/8 "	R42R55099	R42R55098[37]	R4066780	R4090021[201]	-	-	-	-
23-123552-004[266]	2-7/8 "	R42R55250	R42R55250[37]	R4066365	R4090096[72]	-	-	-	-
R44141858[275]	3-3/8 "	R42R55099	R42R55098[37]	R4066780	R4090021[201]	-	-	-	-
R44141858[275]	2-19/32 "	R42R55314	R42R55314[37]	R40107771	R4090100P[72]	-	-	-	-
23-123572-004[271]	2-19/32 "	R42R55314	R42R55314[37]	R40107771	R4090100P[72]	-	-	-	-
R44141476[268]	3-3/8 "	R42R55099	R42R55098[37]	R4066780	R4090021[201]	-	-	-	-
23-122920-002[273]	2-7/8 "	R42R55250	R42R55250[37]	R4066365	R4090096[72]	-	-	-	-
23-122527-002[272]	2-19/32 "	R42R55314	R42R55314[37]	R40107771	R4090100P[72]	-	-	-	-
23-122920-002[273]	2-19/32 "	R42R55314	R42R55314[37]	R40107771	R4090100P[72]	-	-	-	-
23-122527-002[272]	2-7/8 "	R42R55250	R42R55250[37]	R4066365	R4090096[72]	-	-	-	-
R44141608[267]	2-19/32 "	R42R55314	R42R55314[37]	R40107771	R4090100P[72]	-	-	-	-
R44141608[267]	2-7/8 "	R42R55250	R42R55250[37]	R4066365	R4090096[72]	-	-	-	-
23-123552-004[266]	2-19/32 "	R42R55314	R42R55314[37]	R40107771	R4090100P[72]	-	-	-	-
23-123572-004[271]	2-7/8 "	R42R55250	R42R55250[37]	R4066365	R4090096[72]	-	-	-	-
R44141629[269]	2-19/32 "	R42R55314	R42R55314[37]	R40107771	R4090100P[72]	-	-	-	-
R44141628[269]	2-19/32 "	R42R55314	R42R55314[37]	R40107771	R4090100P[72]	-	-	-	-
R44141628[269]	2-7/8 "	R42R55250	R42R55250[37]	R4066365	R4090096[72]	-	-	-	-
R44141627[270]	2-19/32 "	R42R55314	R42R55314[37]	R40107771	R4090100P[72]	-	-	-	-
23-123552-004[266]	2-7/8 "	R42R55250	R42R55250[37]	R4066365	R4090096[72]	-	-	-	-
23-123572-004[271]	2-19/32 "	R42R55314	R42R55314[37]	R40107771	R4090100P[72]	-	-	-	-
R44141627[270]	2-7/8 "	R42R55250	R42R55250[37]	R4066365	R4090096[72]	-	-	-	-
R44141629[269]	2-7/8 "	R42R55250	R42R55250[37]	R4066365	R4090096[72]	-	-	-	-
23-122527-002[272]	2-19/32 "	R42R55314	R42R55314[37]	R40107771	R4090100P[72]	N/A[53]	-	-	-
23-122701-002[269]	2-7/8 "	R42R55250	R42R55250[37]	R4066365	R4090096[72]	-	-	-	-
23-122527-002[272]	2-7/8 "	R42R55250	R42R55250[37]	R4066365	R4090096[72]	-	-	-	-
23-123552-004[266]	3-3/8 "	R42R55099	R42R55098[37]	R4066780	R4090021[201]	-	-	-	-
23-123572-004[271]	3-3/8 "	R42R55099	R42R55098[37]	R4066780	R4090021[201]	-	-	-	-
R44141476[268]	2-19/32 "	R42R55314	R42R55314[37]	R40107771	R4090100P[72]	-	-	-	-
R44141608[267]	2-7/8 "	R42R55250	R42R55250[37]	R4066365	R4090096[72]	-	-	-	-
R44141476[268]	3-3/8 "	R42R55099	R42R55098[37]	R4066780	R4090021[201]	-	-	-	-
23-123572-004[271]	2-19/32 "	R42R55314	R42R55314[37]	R40107771	R4090100P[72]	-	-	-	-
23-122920-002[273]	3-3/8 "	R42R55099	R42R55098[37]	R4066780	R4090021[201]	-	-	-	-
23-122920-002[273]	2-19/32 "	R42R55314	R42R55314[37]	R40107771	R4090100P[72]	-	-	-	-
23-123552-004[266]	2-19/32 "	R42R55314	R42R55314[37]	R40107771	R4090100P[72]	-	-	-	-
R44141476[268]	2-7/8 "	R42R55250	R42R55250[37]	R4066365	R4090096[72]	-	-	-	-
R44141608[267]	2-19/32 "	R42R55314	R42R55314[37]	R40107771	R4090100P[72]	-	-	-	-
23-122920-002[273]	2-7/8 "	R42R55250	R42R55250[37]	R4066365	R4090096[72]	-	-	-	-
23-123572-004[271]	2-7/8 "	R42R55250	R42R55250[37]	R4066365	R4090096[72]	-	-	-	-
23-123552-004[266]	2-7/8 "	R42R55250	R42R55250[37]	R4066365	R4090096[72]	-	-	-	-

271 - 6 Stud, Hat Shape
272 - 6 Stud, U Shape
273 - 5 Stud, U Shape, .780 Dia. Studs
275 - 5 Stud, U Shape, .656 Dia. Studs

MAKE MODEL YEAR AXLE CODE AXLE WEIGHT	AXLE & BRK. TYPE	BRK. MFG.	BRAKE SIZE	FMSI	MERITOR DISC PAD OR BRAKE SHOE	MERITOR GUIDE PIN OR RETURN SPRING KIT	MERITOR CALIPER HWD. KIT OR RETURN SPRING KIT	MERITOR ADJUSTER KIT (LEFT WHEEL)	MERITOR ADJUSTER KIT (RIGHT WHEEL)
ITE(Cont.)									
160, 1600, 1650 SERIES(Cont.)									
1988 M1600, M1652, M1654 Metro Series, Forward Control	Rd	BX		7108 - D184	MD184	R40H5010	R40H5519	NR	NR
	Rd	BX		7108 - D184	MD184	R40H5010	R40H5519	NR	NR
	Rd	BX		7142 - D225	MD225	R40H5010	R40H5522	NR	NR
	Rd	BX		7142 - D225	MD225	R40H5010	R40H5522	NR	NR
S1600, S1652, S1654 Conventional	Fd	BX		7108 - D184	MD184	R40H5010	R40H5519	NR	NR
	Fd	BX		7142 - D225	MD225	R40H5010	R40H5522	NR	NR
	Fd	BX		7108 - D184	MD184	R40H5010	R40H5519	NR	NR
	Fd	BX		7108 - D184	MD184	R40H5010	R40H5519	NR	NR
	Fd	BX		7108 - D184	MD184	R40H5010	R40H5519	NR	NR
	Fd	BX		7108 - D184	MD184	R40H5010	R40H5519	NR	NR
	Fd	BX		7142 - D225	MD225	R40H5010	R40H5522	NR	NR
	Fd	BX		7142 - D225	MD225	R40H5010	R40H5522	NR	NR
	Fd	BX		7142 - D225	MD225	R40H5010	R40H5522	NR	NR
	Fd	BX		7108 - D184	MD184	R40H5010	R40H5519	NR	NR
	Fd	BX		7108 - D184	MD184	R40H5010	R40H5519	NR	NR
	Fd	BX		7108 - D184	MD184	R40H5010	R40H5519	NR	NR
	Fd	BX		7108 - D184	MD184	R40H5010	R40H5519	NR	NR
	Fd	BX		7108 - D184	MD184	R40H5010	R40H5519	NR	NR
	Fd	BX		7142 - D225	MD225	R40H5010	R40H5522	NR	NR
	Fd	BX		7142 - D225	MD225	R40H5010	R40H5522	NR	NR
	Fd	BX		7108 - D184	MD184	R40H5010	R40H5519	NR	NR
	Fd	BX		7108 - D184	MD184	R40H5010	R40H5519	NR	NR
	Fd	BX		7142 - D225	MD225	R40H5010	R40H5522	NR	NR
	Fd	BX		7142 - D225	MD225	R40H5010	R40H5522	NR	NR
	Fd	BX		7108 - D184	MD184	R40H5010	R40H5519	NR	NR
	Fd	BX		7108 - D184	MD184	R40H5010	R40H5519	NR	NR
	Fd	BX		7108 - D184	MD184	R40H5010	R40H5519	NR	NR
	Fd	BX		7108 - D184	MD184	R40H5010	R40H5519	NR	NR
	Fd	BX		7142 - D225	MD225	R40H5010	R40H5522	NR	NR
	Fd	BX		7108 - D184	MD184	R40H5010	R40H5519	NR	NR
	Fd	BX		7108 - D184	MD184	R40H5010	R40H5519	NR	NR
	Fd	BX		7108 - D184	MD184	R40H5010	R40H5519	NR	NR
	Fd	BX		7142 - D225	MD225	R40H5010	R40H5522	NR	NR
	Fd	BX		7108 - D184	MD184	R40H5010	R40H5519	NR	NR
	Fd	BX		7108 - D184	MD184	R40H5010	R40H5519	NR	NR
	Fd	BX		7108 - D184	MD184	R40H5010	R40H5519	NR	NR
	Fd	BX		7142 - D225	MD225	R40H5010	R40H5522	NR	NR
	Fd	BX		7142 - D225	MD225	R40H5010	R40H5522	NR	NR
	Fd	BX		7142 - D225	MD225	R40H5010	R40H5522	NR	NR
	Fd	BX		7108 - D184	MD184	R40H5010	R40H5519	NR	NR
	Fd	BX		7108 - D184	MD184	R40H5010	R40H5519	NR	NR
	Fd	BX		7142 - D225	MD225	R40H5010	R40H5522	NR	NR
	Fd	BX		7142 - D225	MD225	R40H5010	R40H5522	NR	NR
	Fd	BX		7108 - D184	MD184	R40H5010	R40H5519	NR	NR
	Fd	BX		7108 - D184	MD184	R40H5010	R40H5519	NR	NR
	Fd	BX		7142 - D225	MD225	R40H5010	R40H5522	NR	NR
	Fd	BX		7142 - D225	MD225	R40H5010	R40H5522	NR	NR
	Fd	BX		7108 - D184	MD184	R40H5010	R40H5519	NR	NR
	Fd	BX		7108 - D184	MD184	R40H5010	R40H5519	NR	NR
	Fd	BX		7142 - D225	MD225	R40H5010	R40H5522	NR	NR
	Fd	BX		7142 - D225	MD225	R40H5010	R40H5522	NR	NR
	Fd	BX		7108 - D184	MD184	R40H5010	R40H5519	NR	NR
	Fd	BX		7108 - D184	MD184	R40H5010	R40H5519	NR	NR
	Fd	BX		7108 - D184	MD184	R40H5010	R40H5519	NR	NR
	Fd	BX		7108 - D184	MD184	R40H5010	R40H5519	NR	NR
	Fd	BX		7142 - D225	MD225	R40H5010	R40H5522	NR	NR
	Fd	BX		7108 - D184	MD184	R40H5010	R40H5519	NR	NR
	Fd	BX		7142 - D225	MD225	R40H5010	R40H5522	NR	NR
	Fd	BX		7108 - D184	MD184	R40H5010	R40H5519	NR	NR

37 - Also available as a New unit
201 - Steel Piston
269 - 5 Stud, U Shape

53 - Power Brakes
266 - 10 Stud, Hat Shaped
271 - 6 Stud, Hat Shape

72 - Phenolic/Steel Face
268 - 5 Stud, Hat Shape
272 - 6 Stud, U Shape

MERITOR DRUM OR ROTOR NO.	CALIPER OR CYLINDER BORE SIZE	MERITOR CALIPER OR WHEEL CYLINDER (LEFT)	MERITOR CALIPER OR WHEEL CYLINDER (RIGHT)	MERITOR CALIPER OR WHEEL CYLINDER REPAIR KIT	MERITOR CALIPER PISTON	MERITOR MASTER CYLINDER	MERITOR MASTER CYLINDER KIT	MERITOR BRAKE HOSE (LEFT)	MERITOR BRAKE HOSE (RIGHT)
									ITE(Cont.)
									160, 1600, 1650 SERIES(Cont.)
23-123552-004[266]	2-19/32 "	R42R55314	R42R55314[37]	R40107771	R4090100P[72]	-	-	R4577512	R4577512
23-123572-004[271]	2-19/32 "	R42R55314	R42R55314[37]	R40107771	R4090100P[72]	-	-	R4577512	R4577512
23-123572-004[271]	2-7/8 "	R42R55250	R42R55250[37]	R4066365	R4090096[72]	-	-	R4577512	R4577512
23-123552-004[266]	2-7/8 "	R42R55250	R42R55250[37]	R4066365	R4090096[72]	-	-	R4577512	R4577512
23-123552-004[266]	2-19/32 "	R42R55314	R42R55314[37]	R40107771	R4090100P[72]	N/A[53]	-	R458632	R458632
R44141476[268]	2-7/8 "	R42R55250	R42R55250[37]	R4066365	R4090096[72]	N/A[53]	-	R458632	R458632
23-123572-004[271]	2-19/32 "	R42R55314	R42R55314[37]	R40107771	R4090100P[72]	N/A[53]	-	R458632	R458632
23-123552-004[266]	2-19/32 "	R42R55314	R42R55314[37]	R40107771	R4090100P[72]	N/A[53]	-	N/A	N/A
23-122701-002[269]	2-19/32 "	R42R55314	R42R55314[37]	R40107771	R4090100P[72]	N/A[53]	-	R458632	R458632
R44141858[275]	2-19/32 "	R42R55314	R42R55314[37]	R40107771	R4090100P[72]	N/A[53]	-	R458632	R458632
R44141476[268]	2-7/8 "	R42R55250	R42R55250[37]	R4066365	R4090096[72]	N/A[53]	-	R458635	R458635
23-123552-004[266]	2-7/8 "	R42R55250	R42R55250[37]	R4066365	R4090096[72]	N/A[53]	-	R458632	R458632
23-123572-004[271]	2-7/8 "	R42R55250	R42R55250[37]	R4066365	R4090096[72]	N/A[53]	-	R458632	R458632
23-123572-004[271]	3-3/8 "	R42R55099	R42R55098[37]	R4066780	R4090021[201]	N/A[53]	-	R458635	R458635
R44141476[268]	2-19/32 "	R42R55314	R42R55314[37]	R40107771	R4090100P[72]	N/A[53]	-	R458632	R458632
23-122527-002[272]	3-3/8 "	R42R55099	R42R55098[37]	R4066780	R4090021[201]	N/A[53]	-	N/A	N/A
R44141858[275]	3-3/8 "	R42R55099	R42R55098[37]	R4066780	R4090021[201]	N/A[53]	-	R458636	R458636
23-122920-002[273]	3-3/8 "	R42R55099	R42R55098[37]	R4066780	R4090021[201]	N/A[53]	-	R458635	R458635
23-122701-002[269]	2-7/8 "	R42R55250	R42R55250[37]	R4066365	R4090096[72]	N/A[53]	-	R458636	R458636
23-122527-002[272]	2-7/8 "	R42R55250	R42R55250[37]	R4066365	R4090096[72]	N/A[53]	-	R458632	R458632
R44141858[275]	2-19/32 "	R42R55314	R42R55314[37]	R40107771	R4090100P[72]	N/A[53]	-	R458635	R458635
23-122920-002[273]	2-19/32 "	R42R55314	R42R55314[37]	R40107771	R4090100P[72]	N/A[53]	-	R458632	R458632
R44141476[268]	2-7/8 "	R42R55250	R42R55250[37]	R4066365	R4090096[72]	N/A[53]	-	N/A	N/A
23-123552-004[266]	2-7/8 "	R42R55250	R42R55250[37]	R4066365	R4090096[72]	N/A[53]	-	N/A	N/A
23-122920-002[273]	2-19/32 "	R42R55314	R42R55314[37]	R40107771	R4090100P[72]	N/A[53]	-	N/A	N/A
R44141476[268]	2-19/32 "	R42R55314	R42R55314[37]	R40107771	R4090100P[72]	N/A[53]	-	N/A	N/A
23-123572-004[271]	2-19/32 "	R42R55314	R42R55314[37]	R40107771	R4090100P[72]	N/A[53]	-	N/A	N/A
23-122527-002[272]	2-19/32 "	R42R55314	R42R55314[37]	R40107771	R4090100P[72]	N/A[53]	-	N/A	N/A
23-122701-002[269]	2-7/8 "	R42R55250	R42R55250[37]	R4066365	R4090096[72]	N/A[53]	-	R458635	R458635
R44141858[275]	3-3/8 "	R42R55099	R42R55098[37]	R4066780	R4090021[201]	N/A[53]	-	R458635	R458635
23-122920-002[273]	3-3/8 "	R42R55099	R42R55098[37]	R4066780	R4090021[201]	N/A[53]	-	R458632	R458632
23-123572-004[271]	3-3/8 "	R42R55099	R42R55098[37]	R4066780	R4090021[201]	N/A[53]	-	R458632	R458632
23-123572-004[271]	2-7/8 "	R42R55250	R42R55250[37]	R4066365	R4090096[72]	N/A[53]	-	R458635	R458635
23-122527-002[272]	2-19/32 "	R42R55314	R42R55314[37]	R40107771	R4090100P[72]	N/A[53]	-	R458632	R458632
R44141476[268]	3-3/8 "	R42R55099	R42R55098[37]	R4066780	R4090021[201]	N/A[53]	-	R458635	R458635
23-122701-002[269]	2-7/8 "	R42R55250	R42R55250[37]	R4066365	R4090096[72]	N/A[53]	-	R458632	R458632
R44141858[275]	2-7/8 "	R42R55250	R42R55250[37]	R4066365	R4090096[72]	N/A[53]	-	R458635	R458635
23-122920-002[273]	2-7/8 "	R42R55250	R42R55250[37]	R4066365	R4090096[72]	N/A[53]	-	R458635	R458635
23-123552-004[266]	3-3/8 "	R42R55099	R42R55098[37]	R4066780	R4090021[201]	N/A[53]	-	R458635	R458635
23-122701-002[269]	3-3/8 "	R42R55099	R42R55098[37]	R4066780	R4090021[201]	N/A[53]	-	R458636	R458636
R44141858[275]	2-7/8 "	R42R55250	R42R55250[37]	R4066365	R4090096[72]	N/A[53]	-	N/A	N/A
23-122920-002[273]	2-7/8 "	R42R55250	R42R55250[37]	R4066365	R4090096[72]	N/A[53]	-	R458632	R458632
23-122701-002[269]	2-19/32 "	R42R55314	R42R55314[37]	R40107771	R4090100P[72]	N/A[53]	-	R458635	R458635
23-122527-002[272]	3-3/8 "	R42R55099	R42R55098[37]	R4066780	R4090021[201]	N/A[53]	-	R458632	R458632
R44141858[275]	2-19/32 "	R42R55314	R42R55314[37]	R40107771	R4090100P[72]	N/A[53]	-	R458636	R458636
R44141858[275]	2-7/8 "	R42R55250	R42R55250[37]	R4066365	R4090096[72]	N/A[53]	-	R458632	R458632
23-122527-002[272]	3-3/8 "	R42R55099	R42R55098[37]	R4066780	R4090021[201]	N/A[53]	-	R458636	R458636
R44141858[275]	2-7/8 "	R42R55250	R42R55250[37]	R4066365	R4090096[72]	N/A[53]	-	R458636	R458636
23-122527-002[272]	2-7/8 "	R42R55250	R42R55250[37]	R4066365	R4090096[72]	N/A[53]	-	R458635	R458635
23-123552-004[266]	2-7/8 "	R42R55250	R42R55250[37]	R4066365	R4090096[72]	N/A[53]	-	R458635	R458635
23-122701-002[269]	2-7/8 "	R42R55250	R42R55250[37]	R4066365	R4090096[72]	N/A[53]	-	N/A	N/A
23-123552-004[266]	3-3/8 "	R42R55099	R42R55098[37]	R4066780	R4090021[201]	N/A[53]	-	R458632	R458632
23-122527-002[272]	2-7/8 "	R42R55250	R42R55250[37]	R4066365	R4090096[72]	N/A[53]	-	N/A	N/A
23-122920-002[273]	2-7/8 "	R42R55250	R42R55250[37]	R4066365	R4090096[72]	N/A[53]	-	N/A	N/A
23-122920-002[273]	2-19/32 "	R42R55314	R42R55314[37]	R40107771	R4090100P[72]	N/A[53]	-	R458636	R458636
R44141476[268]	2-19/32 "	R42R55314	R42R55314[37]	R40107771	R4090100P[72]	N/A[53]	-	R458636	R458636
23-123552-004[266]	2-19/32 "	R42R55314	R42R55314[37]	R40107771	R4090100P[72]	N/A[53]	-	R458636	R458636
23-123572-004[271]	2-19/32 "	R42R55314	R42R55314[37]	R40107771	R4090100P[72]	N/A[53]	-	R458636	R458636
23-123552-004[266]	2-7/8 "	R42R55250	R42R55250[37]	R4066365	R4090096[72]	N/A[53]	-	R458636	R458636
23-122701-002[269]	3-3/8 "	R42R55099	R42R55098[37]	R4066780	R4090021[201]	N/A[53]	-	R458635	R458635
23-123572-004[271]	2-7/8 "	R42R55250	R42R55250[37]	R4066365	R4090096[72]	N/A[53]	-	N/A	N/A
R44141476[268]	3-3/8 "	R42R55099	R42R55098[37]	R4066780	R4090021[201]	N/A[53]	-	R458632	R458632

273 - 5 Stud, U Shape, .780 Dia. Studs

275 - 5 Stud, U Shape, .656 Dia. Studs

MAKE MODEL YEAR AXLE CODE AXLE WEIGHT	AXLE & BRK. TYPE	BRK. MFG.	BRAKE SIZE	FMSI	MERITOR DISC PAD OR BRAKE SHOE	MERITOR GUIDE PIN OR RETURN SPRING KIT	MERITOR CALIPER HWD. KIT OR RETURN SPRING KIT	MERITOR ADJUSTER KIT (LEFT WHEEL)	MERITOR ADJUSTER KIT (RIGHT WHEEL)
ITE(Cont.)									
160, 1600, 1650 SERIES(Cont.)									
1988									
	Fd	BX		7108 - D184	MD184	R40H5010	R40H5519	NR	NR
	Fd	BX		7108 - D184	MD184	R40H5010	R40H5519	NR	NR
	Fd	BX		7108 - D184	MD184	R40H5010	R40H5519	NR	NR
	Fd	BX		7108 - D184	MD184	R40H5010	R40H5519	NR	NR
	Fd	BX		7108 - D184	MD184	R40H5010	R40H5519	NR	NR
	Fd	BX		7108 - D184	MD184	R40H5010	R40H5519	NR	NR
	Fd	BX		7108 - D184	MD184	R40H5010	R40H5519	NR	NR
	Fd	BX		7108 - D184	MD184	R40H5010	R40H5519	NR	NR
	Fd	BX		7108 - D184	MD184	R40H5010	R40H5519	NR	NR
	Fd	BX		7108 - D184	MD184	R40H5010	R40H5519	NR	NR
	Fd	BX		7108 - D184	MD184	R40H5010	R40H5519	NR	NR
	Fd	BX		7108 - D184	MD184	R40H5010	R40H5519	NR	NR
	Fd	BX		7108 - D184	MD184	R40H5010	R40H5519	NR	NR
	Fd	BX		7142 - D225	MD225	R40H5010	R40H5522	NR	NR
	Fd	BX		7108 - D184	MD184	R40H5010	R40H5519	NR	NR
	Fd	BX		7108 - D184	MD184	R40H5010	R40H5519	NR	NR
	Fd	BX		7108 - D184	MD184	R40H5010	R40H5519	NR	NR
	Fd	BX		7108 - D184	MD184	R40H5010	R40H5519	NR	NR
	Fd	BX		7108 - D184	MD184	R40H5010	R40H5519	NR	NR
	Fd	BX		7108 - D184	MD184	R40H5010	R40H5519	NR	NR
	Fd	BX		7108 - D184	MD184	R40H5010	R40H5519	NR	NR
	Fd	BX		7142 - D225	MD225	R40H5010	R40H5522	NR	NR
	Fd	BX		7142 - D225	MD225	R40H5010	R40H5522	NR	NR
	Fd	BX		7108 - D184	MD184	R40H5010	R40H5519	NR	NR
	Fd	BX		7142 - D225	MD225	R40H5010	R40H5522	NR	NR
	Fd	BX		7108 - D184	MD184	R40H5010	R40H5519	NR	NR
	Fd	BX		7108 - D184	MD184	R40H5010	R40H5519	NR	NR
	Rd	BX		7142 - D225	MD225	R40H5010	R40H5522	NR	NR
	Rd	BX		7108 - D184	MD184	R40H5010	R40H5519	NR	NR
	Rd	BX		7108 - D184	MD184	R40H5010	R40H5519	NR	NR
	Rd	BX		7108 - D184	MD184	R40H5010	R40H5519	NR	NR
	Rd	BX		7108 - D184	MD184	R40H5010	R40H5519	NR	NR
	Rd	BX		7142 - D225	MD225	R40H5010	R40H5522	NR	NR
	Rd	BX		7108 - D184	MD184	R40H5010	R40H5519	NR	NR
	Rd	BX		7108 - D184	MD184	R40H5010	R40H5519	NR	NR
	Rd	BX		7108 - D184	MD184	R40H5010	R40H5519	NR	NR
	Rd	BX		7142 - D225	MD225	R40H5010	R40H5522	NR	NR
	Rd	BX		7142 - D225	MD225	R40H5010	R40H5522	NR	NR
	Rd	BX		7142 - D225	MD225	R40H5010	R40H5522	NR	NR
	Rd	BX		7142 - D225	MD225	R40H5010	R40H5522	NR	NR
	Rd	BX		7142 - D225	MD225	R40H5010	R40H5522	NR	NR
	Rd	BX		7108 - D184	MD184	R40H5010	R40H5519	NR	NR
	Rd	BX		7108 - D184	MD184	R40H5010	R40H5519	NR	NR
	Rd	BX		7142 - D225	MD225	R40H5010	R40H5522	NR	NR
	Rd	BX		7142 - D225	MD225	R40H5010	R40H5522	NR	NR
	Rd	BX		7142 - D225	MD225	R40H5010	R40H5522	NR	NR
	Rd	BX		7142 - D225	MD225	R40H5010	R40H5522	NR	NR
	Rd	BX		7142 - D225	MD225	R40H5010	R40H5522	NR	NR
	Rd	BX		7108 - D184	MD184	R40H5010	R40H5519	NR	NR
	Rd	BX		7108 - D184	MD184	R40H5010	R40H5519	NR	NR
	Rd	BX		7108 - D184	MD184	R40H5010	R40H5519	NR	NR
1987 C1610, C1650 Cargostar Tilt Cab	Fd	BX		7142 - D225	MD225	R40H5010	R40H5522	NR	NR
	Fd	BX		7108 - D184	MD184	R40H5010	R40H5519	NR	NR
	Rd	BX		7142 - D225	MD225	R40H5010	R40H5522	NR	NR
M1600, M1652, M1654 Metro Series, Forward Control	Fd	BX		7142 - D225	MD225	R40H5010	R40H5522	NR	NR
	Fd	BX		7108 - D184	MD184	R40H5010	R40H5519	NR	NR
	Fd	BX		7108 - D184	MD184	R40H5010	R40H5519	NR	NR
	Fd	BX		7108 - D184	MD184	R40H5010	R40H5519	NR	NR
	Fd	BX		7108 - D184	MD184	R40H5010	R40H5519	NR	NR
	Fd	BX		7142 - D225	MD225	R40H5010	R40H5522	NR	NR
	Fd	BX		7108 - D184	MD184	R40H5010	R40H5519	NR	NR

37 - Also available as a New unit
72 - Phenolic/Steel Face
267 - 10 Stud, U Shaped

52 - 18" Length
201 - Steel Piston
268 - 5 Stud, Hat Shape

53 - Power Brakes
266 - 10 Stud, Hat Shaped
269 - 5 Stud, U Shape

MERITOR DRUM OR ROTOR NO.	CALIPER OR CYLINDER BORE SIZE	MERITOR CALIPER OR WHEEL CYLINDER (LEFT)	MERITOR CALIPER OR WHEEL CYLINDER (RIGHT)	MERITOR CALIPER OR WHEEL CYLINDER REPAIR KIT	MERITOR CALIPER PISTON	MERITOR MASTER CYLINDER	MERITOR MASTER CYLINDER KIT	MERITOR BRAKE HOSE (LEFT)	MERITOR BRAKE HOSE (RIGHT)
									ITE(Cont.)
									160, 1600, 1650 SERIES(Cont.)
R44141476[268]	3-3/8 "	R42R55099	R42R55098[37]	R4066780	R4090021[201]	N/A[53]	-	N/A	N/A
23-123572-004[271]	3-3/8 "	R42R55099	R42R55098[37]	R4066780	R4090021[201]	N/A[53]	-	N/A	N/A
23-122701-002[269]	3-3/8 "	R42R55099	R42R55098[37]	R4066780	R4090021[201]	N/A[53]	-	R458632	R458632
23-122920-002[273]	3-3/8 "	R42R55099	R42R55098[37]	R4066780	R4090021[201]	N/A[53]	-	N/A	N/A
23-122527-002[272]	2-19/32 "	R42R55314	R42R55314[37]	R40107771	R4090100P[72]	N/A[53]	-	R458636	R458636
23-123552-004[266]	3-3/8 "	R42R55099	R42R55098[37]	R4066780	R4090021[201]	N/A[53]	-	N/A	N/A
R44141858[275]	3-3/8 "	R42R55099	R42R55098[37]	R4066780	R4090021[201]	N/A[53]	-	R458632	R458632
23-122701-002[269]	2-19/32 "	R42R55314	R42R55314[37]	R40107771	R4090100P[72]	N/A[53]	-	N/A	N/A
R44141858[275]	2-19/32 "	R42R55314	R42R55314[37]	R40107771	R4090100P[72]	N/A[53]	-	N/A	N/A
23-122701-002[269]	3-3/8 "	R42R55099	R42R55098[37]	R4066780	R4090021[201]	N/A[53]	-	N/A	N/A
R44141858[275]	3-3/8 "	R42R55099	R42R55098[37]	R4066780	R4090021[201]	N/A[53]	-	N/A	N/A
23-123572-004[271]	3-3/8 "	R42R55099	R42R55098[37]	R4066780	R4090021[201]	N/A[53]	-	R458636	R458636
23-123572-004[271]	2-7/8 "	R42R55250	R42R55250[37]	R4066365	R4090096[72]	N/A[53]	-	R458636	R458636
23-122920-002[273]	2-19/32 "	R42R55314	R42R55314[37]	R40107771	R4090100P[72]	N/A[53]	-	R458635	R458635
23-122527-002[272]	3-3/8 "	R42R55099	R42R55098[37]	R4066780	R4090021[201]	N/A[53]	-	R458635	R458635
R44141476[268]	3-3/8 "	R42R55099	R42R55098[37]	R4066780	R4090021[201]	N/A[53]	-	R458636	R458636
23-123552-004[266]	3-3/8 "	R42R55099	R42R55098[37]	R4066780	R4090021[201]	N/A[53]	-	R458636	R458636
23-122701-002[269]	2-19/32 "	R42R55314	R42R55314[37]	R40107771	R4090100P[72]	N/A[53]	-	R458636	R458636
R44141476[268]	2-19/32 "	R42R55314	R42R55314[37]	R40107771	R4090100P[72]	N/A[53]	-	R458635	R458635
23-123552-004[266]	2-19/32 "	R42R55314	R42R55314[37]	R40107771	R4090100P[72]	N/A[53]	-	R458635	R458635
23-122920-002[273]	2-7/8 "	R42R55250	R42R55250[37]	R4066365	R4090096[72]	N/A[53]	-	R458636	R458636
R44141476[268]	2-7/8 "	R42R55250	R42R55250[37]	R4066365	R4090096[72]	N/A[53]	-	R458636	R458636
23-123572-004[271]	2-19/32 "	R42R55314	R42R55314[37]	R40107771	R4090100P[72]	N/A[53]	-	R458635	R458635
23-122527-002[272]	2-7/8 "	R42R55250	R42R55250[37]	R4066365	R4090096[72]	N/A[53]	-	R458636	R458636
23-122527-002[272]	2-19/32 "	R42R55314	R42R55314[37]	R40107771	R4090100P[72]	N/A[53]	-	R458635	R458635
23-122920-002[273]	3-3/8 "	R42R55099	R42R55098[37]	R4066780	R4090021[201]	N/A[53]	-	R458636	R458636
R44141627[270]	2-7/8 "	R42R55250	R42R55250[37]	R4066365	R4090096[72]	-	-	R458634[52]	R458634
23-123552-004[266]	2-19/32 "	R42R55314	R42R55314[37]	R40107771	R4090100P[72]	-	-	R458634[52]	R458634
R44141629[269]	2-19/32 "	R42R55314	R42R55314[37]	R40107771	R4090100P[72]	-	-	R458634[52]	R458634
23-123572-004[271]	2-19/32 "	R42R55314	R42R55314[37]	R40107771	R4090100P[72]	-	-	R4577512	R4577512
R44141627[270]	2-19/32 "	R42R55314	R42R55314[37]	R40107771	R4090100P[72]	-	-	R4577512	R4577512
R44141608[267]	2-7/8 "	R42R55250	R42R55250[37]	R4066365	R4090096[72]	-	-	R4577512	R4577512
R44141629[269]	2-19/32 "	R42R55314	R42R55314[37]	R40107771	R4090100P[72]	-	-	R4577512	R4577512
R44141608[267]	2-19/32 "	R42R55314	R42R55314[37]	R40107771	R4090100P[72]	-	-	R4577512	R4577512
R44141628[269]	2-19/32 "	R42R55314	R42R55314[37]	R40107771	R4090100P[72]	-	-	R458634[52]	R458634
23-123552-004[266]	2-7/8 "	R42R55250	R42R55250[37]	R4066365	R4090096[72]	-	-	R458634[52]	R458634
R44141629[269]	2-7/8 "	R42R55250	R42R55250[37]	R4066365	R4090096[72]	-	-	R458634[52]	R458634
23-123552-004[266]	2-7/8 "	R42R55250	R42R55250[37]	R4066365	R4090096[72]	-	-	R4577512	R4577512
R44141629[269]	2-7/8 "	R42R55250	R42R55250[37]	R4066365	R4090096[72]	-	-	R4577512	R4577512
R44141608[267]	2-7/8 "	R42R55250	R42R55250[37]	R4066365	R4090096[72]	-	-	R458634[52]	R458634
R44141627[270]	2-19/32 "	R42R55314	R42R55314[37]	R40107771	R4090100P[72]	-	-	R458634[52]	R458634
23-123572-004[271]	2-19/32 "	R42R55314	R42R55314[37]	R40107771	R4090100P[72]	-	-	R458634[52]	R458634
R44141628[269]	2-7/8 "	R42R55250	R42R55250[37]	R4066365	R4090096[72]	-	-	R4577512	R4577512
23-123572-004[271]	2-7/8 "	R42R55250	R42R55250[37]	R4066365	R4090096[72]	-	-	R458634[52]	R458634
R44141628[269]	2-7/8 "	R42R55250	R42R55250[37]	R4066365	R4090096[72]	-	-	R458634[52]	R458634
23-123572-004[271]	2-7/8 "	R42R55250	R42R55250[37]	R4066365	R4090096[72]	-	-	R4577512	R4577512
R44141627[270]	2-7/8 "	R42R55250	R42R55250[37]	R4066365	R4090096[72]	-	-	R4577512	R4577512
23-123552-004[266]	2-19/32 "	R42R55314	R42R55314[37]	R40107771	R4090100P[72]	-	-	R4577512	R4577512
R44141628[269]	2-19/32 "	R42R55314	R42R55314[37]	R40107771	R4090100P[72]	-	-	R4577512	R4577512
R44141608[267]	2-19/32 "	R42R55314	R42R55314[37]	R40107771	R4090100P[72]	-	-	R458634[52]	R458634
23-122701-002[269]	2-7/8 "	R42R55250	R42R55250[37]	R4066365	R4090096[72]	-	-	-	-
23-122527-002[272]	2-19/32 "	R42R55314	R42R55314[37]	R40107771	R4090100P[72]	N/A[53]	-	-	-
23-122527-002[272]	2-7/8 "	R42R55250	R42R55250[37]	R4066365	R4090096[72]	-	-	-	-
R44141476[268]	2-7/8 "	R42R55250	R42R55250[37]	R4066365	R4090096[72]	-	-	R458632	R458632
23-123572-004[271]	2-19/32 "	R42R55314	R42R55314[37]	R40107771	R4090100P[72]	-	-	R458632	R458632
23-123552-004[266]	3-3/8 "	R42R55099	R42R55098[37]	R4066780	R4090021[201]	-	-	R458636	R458636
23-122920-002[273]	3-3/8 "	R42R55099	R42R55098[37]	R4066780	R4090021[201]	-	-	R458632	R458632
23-123572-004[271]	2-19/32 "	R42R55314	R42R55314[37]	R40107771	R4090100P[72]	-	-	R458636	R458636
23-123572-004[271]	2-7/8 "	R42R55250	R42R55250[37]	R4066365	R4090096[72]	-	-	R458636	R458636
23-123552-004[266]	2-19/32 "	R42R55314	R42R55314[37]	R40107771	R4090100P[72]	-	-	R458636	R458636

270 - 5 Stud, U Shape, .766 Dia. Studs
271 - 6 Stud, Hat Shape
272 - 6 Stud, U Shape
273 - 5 Stud, U Shape, .780 Dia. Studs
275 - 5 Stud, U Shape, .656 Dia. Studs

MAKE MODEL YEAR AXLE CODE AXLE WEIGHT	AXLE & BRK. TYPE	BRK. MFG.	BRAKE SIZE	FMSI	MERITOR DISC PAD OR BRAKE SHOE	MERITOR GUIDE PIN OR RETURN SPRING KIT	MERITOR CALIPER HWD. KIT OR RETURN SPRING KIT	MERITOR ADJUSTER KIT (LEFT WHEEL)	MERITOR ADJUSTER KIT (RIGHT WHEEL)
ITE(Cont.)									
160, 1600, 1650 SERIES(Cont.)									
1987									
	Fd	BX		7108 - D184	MD184	R40H5010	R40H5519	NR	NR
	Fd	BX		7108 - D184	MD184	R40H5010	R40H5519	NR	NR
	Fd	BX		7108 - D184	MD184	R40H5010	R40H5519	NR	NR
	Fd	BX		7142 - D225	MD225	R40H5010	R40H5522	NR	NR
	Fd	BX		7108 - D184	MD184	R40H5010	R40H5519	NR	NR
	Fd	BX		7108 - D184	MD184	R40H5010	R40H5519	NR	NR
	Fd	BX		7108 - D184	MD184	R40H5010	R40H5519	NR	NR
	Fd	BX		7108 - D184	MD184	R40H5010	R40H5519	NR	NR
	Fd	BX		7142 - D225	MD225	R40H5010	R40H5522	NR	NR
	Fd	BX		7108 - D184	MD184	R40H5010	R40H5519	NR	NR
	Fd	BX		7142 - D225	MD225	R40H5010	R40H5522	NR	NR
	Fd	BX		7108 - D184	MD184	R40H5010	R40H5519	NR	NR
	Fd	BX		7108 - D184	MD184	R40H5010	R40H5519	NR	NR
	Fd	BX		7108 - D184	MD184	R40H5010	R40H5519	NR	NR
	Fd	BX		7108 - D184	MD184	R40H5010	R40H5519	NR	NR
	Fd	BX		7108 - D184	MD184	R40H5010	R40H5519	NR	NR
	Fd	BX		7142 - D225	MD225	R40H5010	R40H5522	NR	NR
	Fd	BX		7142 - D225	MD225	R40H5010	R40H5522	NR	NR
	Fd	BX		7142 - D225	MD225	R40H5010	R40H5522	NR	NR
	Fd	BX		7142 - D225	MD225	R40H5010	R40H5522	NR	NR
	Fd	BX		7142 - D225	MD225	R40H5010	R40H5522	NR	NR
	Rd	BX		7142 - D225	MD225	R40H5010	R40H5522	NR	NR
	Rd	BX		7142 - D225	MD225	R40H5010	R40H5522	NR	NR
	Rd	BX		7108 - D184	MD184	R40H5010	R40H5519	NR	NR
	Rd	BX		7108 - D184	MD184	R40H5010	R40H5519	NR	NR
S1600, S1652, S1654									
Conventional	Fd	BX		7108 - D184	MD184	R40H5010	R40H5519	NR	NR
	Fd	BX		7108 - D184	MD184	R40H5010	R40H5519	NR	NR
	Fd	BX		7142 - D225	MD225	R40H5010	R40H5522	NR	NR
	Fd	BX		7142 - D225	MD225	R40H5010	R40H5522	NR	NR
	Fd	BX		7108 - D184	MD184	R40H5010	R40H5519	NR	NR
	Fd	BX		7142 - D225	MD225	R40H5010	R40H5522	NR	NR
	Fd	BX		7108 - D184	MD184	R40H5010	R40H5519	NR	NR
	Fd	BX		7108 - D184	MD184	R40H5010	R40H5519	NR	NR
	Fd	BX		7108 - D184	MD184	R40H5010	R40H5519	NR	NR
	Fd	BX		7108 - D184	MD184	R40H5010	R40H5519	NR	NR
	Fd	BX		7142 - D225	MD225	R40H5010	R40H5522	NR	NR
	Fd	BX		7142 - D225	MD225	R40H5010	R40H5522	NR	NR
	Fd	BX		7142 - D225	MD225	R40H5010	R40H5522	NR	NR
	Fd	BX		7142 - D225	MD225	R40H5010	R40H5522	NR	NR
	Fd	BX		7108 - D184	MD184	R40H5010	R40H5519	NR	NR
	Fd	BX		7108 - D184	MD184	R40H5010	R40H5519	NR	NR
	Fd	BX		7108 - D184	MD184	R40H5010	R40H5519	NR	NR
	Fd	BX		7142 - D225	MD225	R40H5010	R40H5522	NR	NR
	Fd	BX		7108 - D184	MD184	R40H5010	R40H5519	NR	NR
	Fd	BX		7142 - D225	MD225	R40H5010	R40H5522	NR	NR
	Fd	BX		7108 - D184	MD184	R40H5010	R40H5519	NR	NR
	Fd	BX		7108 - D184	MD184	R40H5010	R40H5519	NR	NR
	Fd	BX		7108 - D184	MD184	R40H5010	R40H5519	NR	NR
	Fd	BX		7108 - D184	MD184	R40H5010	R40H5519	NR	NR
	Fd	BX		7108 - D184	MD184	R40H5010	R40H5519	NR	NR
	Fd	BX		7108 - D184	MD184	R40H5010	R40H5519	NR	NR
	Fd	BX		7142 - D225	MD225	R40H5010	R40H5522	NR	NR
	Fd	BX		7108 - D184	MD184	R40H5010	R40H5519	NR	NR
	Fd	BX		7142 - D225	MD225	R40H5010	R40H5522	NR	NR
	Fd	BX		7142 - D225	MD225	R40H5010	R40H5522	NR	NR
	Fd	BX		7108 - D184	MD184	R40H5010	R40H5519	NR	NR
	Fd	BX		7108 - D184	MD184	R40H5010	R40H5519	NR	NR
	Fd	BX		7108 - D184	MD184	R40H5010	R40H5519	NR	NR
	Fd	BX		7142 - D225	MD225	R40H5010	R40H5522	NR	NR
	Fd	BX		7142 - D225	MD225	R40H5010	R40H5522	NR	NR
	Fd	BX		7142 - D225	MD225	R40H5010	R40H5522	NR	NR
	Fd	BX		7108 - D184	MD184	R40H5010	R40H5519	NR	NR
	Fd	BX		7108 - D184	MD184	R40H5010	R40H5519	NR	NR

37 - Also available as a New unit
72 - Phenolic/Steel Face
267 - 10 Stud, U Shaped

52 - 18" Length
201 - Steel Piston
268 - 5 Stud, Hat Shape

53 - Power Brakes
266 - 10 Stud, Hat Shaped
269 - 5 Stud, U Shape

MERITOR DRUM OR ROTOR NO.	CALIPER OR CYLINDER BORE SIZE	MERITOR CALIPER OR WHEEL CYLINDER (LEFT)	MERITOR CALIPER OR WHEEL CYLINDER (RIGHT)	MERITOR CALIPER OR WHEEL CYLINDER REPAIR KIT	MERITOR CALIPER PISTON	MERITOR MASTER CYLINDER	MERITOR MASTER CYLINDER KIT	MERITOR BRAKE HOSE (LEFT)	MERITOR BRAKE HOSE (RIGHT)
									ITE(Cont.)
									160, 1600, 1650 SERIES(Cont.)
23-122920-002[273]	2-19/32 "	R42R55314	R42R55314[37]	R40107771	R4090100P[72]	-	-	R458632	R458632
R44141476[268]	2-19/32 "	R42R55314	R42R55314[37]	R40107771	R4090100P[72]	-	-	R458636	R458636
23-122920-002[273]	3-3/8 "	R42R55099	R42R55098[37]	R4066780	R4090021[201]	-	-	R458636	R458636
23-123552-004[266]	2-7/8 "	R42R55250	R42R55250[37]	R4066365	R4090096[72]	-	-	R458632	R458632
R44141476[268]	3-3/8 "	R42R55099	R42R55098[37]	R4066780	R4090021[201]	-	-	R458632	R458632
R44141608[267]	2-19/32 "	R42R55314	R42R55314[37]	R40107771	R4090100P[72]	-	-	R458632	R458632
R44141608[267]	2-19/32 "	R42R55314	R42R55314[37]	R40107771	R4090100P[72]	-	-	R458636	R458636
23-122920-002[273]	2-19/32 "	R42R55314	R42R55314[37]	R40107771	R4090100P[72]	-	-	R458636	R458636
23-123552-004[266]	2-7/8 "	R42R55250	R42R55250[37]	R4066365	R4090096[72]	-	-	R458636	R458636
23-123572-004[271]	3-3/8 "	R42R55099	R42R55098[37]	R4066780	R4090021[201]	-	-	R458636	R458636
23-123572-004[271]	2-7/8 "	R42R55250	R42R55250[37]	R4066365	R4090096[72]	-	-	R458632	R458632
R44141476[268]	2-19/32 "	R42R55314	R42R55314[37]	R40107771	R4090100P[72]	-	-	R458632	R458632
23-123552-004[266]	2-19/32 "	R42R55314	R42R55314[37]	R40107771	R4090100P[72]	-	-	R458632	R458632
23-123572-004[271]	3-3/8 "	R42R55099	R42R55098[37]	R4066780	R4090021[201]	-	-	R458632	R458632
R44141476[268]	3-3/8 "	R42R55099	R42R55098[37]	R4066780	R4090021[201]	-	-	R458636	R458636
23-123552-004[266]	3-3/8 "	R42R55099	R42R55098[37]	R4066780	R4090021[201]	-	-	R458632	R458632
R44141476[268]	2-7/8 "	R42R55250	R42R55250[37]	R4066365	R4090096[72]	-	-	R458636	R458636
R44141608[267]	2-7/8 "	R42R55250	R42R55250[37]	R4066365	R4090096[72]	-	-	R458632	R458632
23-122920-002[273]	2-7/8 "	R42R55250	R42R55250[37]	R4066365	R4090096[72]	-	-	R458632	R458632
R44141608[267]	2-7/8 "	R42R55250	R42R55250[37]	R4066365	R4090096[72]	-	-	R458636	R458636
23-122920-002[273]	2-7/8 "	R42R55250	R42R55250[37]	R4066365	R4090096[72]	-	-	R458636	R458636
23-123552-004[266]	2-7/8 "	R42R55250	R42R55250[37]	R4066365	R4090096[72]	-	-	R458634[52]	R458634
23-123572-004[271]	2-7/8 "	R42R55250	R42R55250[37]	R4066365	R4090096[72]	-	-	R458634[52]	R458634
23-123572-004[271]	2-19/32 "	R42R55314	R42R55314[37]	R40107771	R4090100P[72]	-	-	R458634[52]	R458634
23-123552-004[266]	2-19/32 "	R42R55314	R42R55314[37]	R40107771	R4090100P[72]	-	-	R458634[52]	R458634
R44141858[275]	2-19/32 "	R42R55314	R42R55314[37]	R40107771	R4090100P[72]	N/A[53]	-	R458635	R458635
23-122920-002[273]	3-3/8 "	R42R55099	R42R55098[37]	R4066780	R4090021[201]	N/A[53]	-	R458635	R458635
R44141476[268]	2-7/8 "	R42R55250	R42R55250[37]	R4066365	R4090096[72]	N/A[53]	-	R458636	R458636
23-122527-002[272]	2-7/8 "	R42R55250	R42R55250[37]	R4066365	R4090096[72]	N/A[53]	-	R458636	R458636
23-123552-004[266]	2-19/32 "	R42R55314	R42R55314[37]	R40107771	R4090100P[72]	N/A[53]	-	R458635	R458635
23-122701-002[269]	2-7/8 "	R42R55250	R42R55250[37]	R4066365	R4090096[72]	N/A[53]	-	R458632	R458632
23-122527-002[272]	3-3/8 "	R42R55099	R42R55098[37]	R4066780	R4090021[201]	N/A[53]	-	R458635	R458635
R44141476[268]	2-19/32 "	R42R55314	R42R55314[37]	R40107771	R4090100P[72]	N/A[53]	-	R458635	R458635
23-123572-004[271]	3-3/8 "	R42R55099	R42R55098[37]	R4066780	R4090021[201]	N/A[53]	-	R458632	R458632
23-123552-004[266]	3-3/8 "	R42R55099	R42R55098[37]	R4066780	R4090021[201]	N/A[53]	-	N/A	N/A
23-122701-002[269]	2-7/8 "	R42R55250	R42R55250[37]	R4066365	R4090096[72]	N/A[53]	-	R458636	R458636
23-122920-002[273]	2-7/8 "	R42R55250	R42R55250[37]	R4066365	R4090096[72]	N/A[53]	-	R458635	R458635
R44141476[268]	2-7/8 "	R42R55250	R42R55250[37]	R4066365	R4090096[72]	N/A[53]	-	N/A	N/A
23-122527-002[272]	2-7/8 "	R42R55250	R42R55250[37]	R4066365	R4090096[72]	N/A[53]	-	N/A	N/A
23-122920-002[273]	2-19/32 "	R42R55314	R42R55314[37]	R40107771	R4090100P[72]	N/A[53]	-	N/A	N/A
23-122701-002[269]	3-3/8 "	R42R55099	R42R55098[37]	R4066780	R4090021[201]	N/A[53]	-	R458636	R458636
23-122920-002[273]	3-3/8 "	R42R55099	R42R55098[37]	R4066780	R4090021[201]	N/A[53]	-	R458636	R458636
23-122527-002[272]	2-7/8 "	R42R55250	R42R55250[37]	R4066365	R4090096[72]	N/A[53]	-	R458635	R458635
R44141858[275]	3-3/8 "	R42R55099	R42R55098[37]	R4066780	R4090021[201]	N/A[53]	-	N/A	N/A
23-123572-004[271]	2-7/8 "	R42R55250	R42R55250[37]	R4066365	R4090096[72]	N/A[53]	-	R458632	R458632
23-123552-004[266]	2-19/32 "	R42R55314	R42R55314[37]	R40107771	R4090100P[72]	N/A[53]	-	R458636	R458636
R44141476[268]	3-3/8 "	R42R55099	R42R55098[37]	R4066780	R4090021[201]	N/A[53]	-	R458635	R458635
23-122701-002[269]	2-19/32 "	R42R55314	R42R55314[37]	R40107771	R4090100P[72]	N/A[53]	-	R458636	R458636
23-122920-002[273]	2-19/32 "	R42R55314	R42R55314[37]	R40107771	R4090100P[72]	N/A[53]	-	R458636	R458636
23-123572-004[271]	2-19/32 "	R42R55314	R42R55314[37]	R40107771	R4090100P[72]	N/A[53]	-	R458636	R458636
R44141476[268]	3-3/8 "	R42R55099	R42R55098[37]	R4066780	R4090021[201]	N/A[53]	-	R458632	R458632
23-123572-004[271]	2-7/8 "	R42R55250	R42R55250[37]	R4066365	R4090096[72]	N/A[53]	-	R458636	R458636
23-122527-002[272]	3-3/8 "	R42R55099	R42R55098[37]	R4066780	R4090021[201]	N/A[53]	-	N/A	N/A
R44141858[275]	2-7/8 "	R42R55250	R42R55250[37]	R4066365	R4090096[72]	N/A[53]	-	R458632	R458632
23-122527-002[272]	2-7/8 "	R42R55250	R42R55250[37]	R4066365	R4090096[72]	N/A[53]	-	R458632	R458632
23-123572-004[271]	2-19/32 "	R42R55314	R42R55314[37]	R40107771	R4090100P[72]	N/A[53]	-	N/A	N/A
R44141858[275]	2-19/32 "	R42R55314	R42R55314[37]	R40107771	R4090100P[72]	N/A[53]	-	R458636	R458636
23-122527-002[272]	2-19/32 "	R42R55314	R42R55314[37]	R40107771	R4090100P[72]	N/A[53]	-	R458632	R458632
23-122920-002[273]	2-7/8 "	R42R55250	R42R55250[37]	R4066365	R4090096[72]	N/A[53]	-	R458636	R458636
23-122701-002[269]	2-7/8 "	R42R55250	R42R55250[37]	R4066365	R4090096[72]	N/A[53]	-	N/A	N/A
23-122920-002[273]	2-7/8 "	R42R55250	R42R55250[37]	R4066365	R4090096[72]	N/A[53]	-	N/A	N/A
23-122920-002[273]	3-3/8 "	R42R55099	R42R55098[37]	R4066780	R4090021[201]	N/A[53]	-	N/A	N/A
23-122701-002[269]	3-3/8 "	R42R55099	R42R55098[37]	R4066780	R4090021[201]	N/A[53]	-	N/A	N/A

271 - 6 Stud, Hat Shape
272 - 6 Stud, U Shape
273 - 5 Stud, U Shape, .780 Dia. Studs
275 - 5 Stud, U Shape, .656 Dia. Studs

MAKE MODEL YEAR AXLE CODE AXLE WEIGHT	AXLE & BRK. TYPE	BRK. MFG.	BRAKE SIZE	FMSI	MERITOR DISC PAD OR BRAKE SHOE	MERITOR GUIDE PIN OR RETURN SPRING KIT	MERITOR CALIPER HWD. KIT OR RETURN SPRING KIT	MERITOR ADJUSTER KIT (LEFT WHEEL)	MERITOR ADJUSTER KIT (RIGHT WHEEL)
ITE(Cont.)									
160, 1600, 1650 SERIES(Cont.)									
1987									
	Fd	BX		7108 - D184	MD184	R40H5010	R40H5519	NR	NR
	Fd	BX		7108 - D184	MD184	R40H5010	R40H5519	NR	NR
	Fd	BX		7108 - D184	MD184	R40H5010	R40H5519	NR	NR
	Fd	BX		7108 - D184	MD184	R40H5010	R40H5519	NR	NR
	Fd	BX		7108 - D184	MD184	R40H5010	R40H5519	NR	NR
	Fd	BX		7108 - D184	MD184	R40H5010	R40H5519	NR	NR
	Fd	BX		7108 - D184	MD184	R40H5010	R40H5519	NR	NR
	Fd	BX		7108 - D184	MD184	R40H5010	R40H5519	NR	NR
	Fd	BX		7108 - D184	MD184	R40H5010	R40H5519	NR	NR
	Fd	BX		7108 - D184	MD184	R40H5010	R40H5519	NR	NR
	Fd	BX		7142 - D225	MD225	R40H5010	R40H5522	NR	NR
	Fd	BX		7142 - D225	MD225	R40H5010	R40H5522	NR	NR
	Fd	BX		7108 - D184	MD184	R40H5010	R40H5519	NR	NR
	Fd	BX		7108 - D184	MD184	R40H5010	R40H5519	NR	NR
	Fd	BX		7108 - D184	MD184	R40H5010	R40H5519	NR	NR
	Fd	BX		7108 - D184	MD184	R40H5010	R40H5519	NR	NR
	Fd	BX		7108 - D184	MD184	R40H5010	R40H5519	NR	NR
	Fd	BX		7142 - D225	MD225	R40H5010	R40H5522	NR	NR
	Fd	BX		7108 - D184	MD184	R40H5010	R40H5519	NR	NR
	Fd	BX		7142 - D225	MD225	R40H5010	R40H5522	NR	NR
	Fd	BX		7108 - D184	MD184	R40H5010	R40H5519	NR	NR
	Fd	BX		7142 - D225	MD225	R40H5010	R40H5522	NR	NR
	Fd	BX		7108 - D184	MD184	R40H5010	R40H5519	NR	NR
	Fd	BX		7142 - D225	MD225	R40H5010	R40H5522	NR	NR
	Fd	BX		7142 - D225	MD225	R40H5010	R40H5522	NR	NR
	Fd	BX		7142 - D225	MD225	R40H5010	R40H5522	NR	NR
	Fd	BX		7142 - D225	MD225	R40H5010	R40H5522	NR	NR
	Fd	BX		7108 - D184	MD184	R40H5010	R40H5519	NR	NR
	Fd	BX		7108 - D184	MD184	R40H5010	R40H5519	NR	NR
	Fd	BX		7108 - D184	MD184	R40H5010	R40H5519	NR	NR
	Fd	BX		7142 - D225	MD225	R40H5010	R40H5522	NR	NR
	Fd	BX		7108 - D184	MD184	R40H5010	R40H5519	NR	NR
	Fd	BX		7142 - D225	MD225	R40H5010	R40H5522	NR	NR
	Fd	BX		7142 - D225	MD225	R40H5010	R40H5522	NR	NR
	Fd	BX		7142 - D225	MD225	R40H5010	R40H5522	NR	NR
	Fd	BX		7108 - D184	MD184	R40H5010	R40H5519	NR	NR
	Fd	BX		7108 - D184	MD184	R40H5010	R40H5519	NR	NR
	Fd	BX		7108 - D184	MD184	R40H5010	R40H5519	NR	NR
	Fd	BX		7108 - D184	MD184	R40H5010	R40H5519	NR	NR
	Fd	BX		7108 - D184	MD184	R40H5010	R40H5519	NR	NR
	Fd	BX		7108 - D184	MD184	R40H5010	R40H5519	NR	NR
	Fd	BX		7108 - D184	MD184	R40H5010	R40H5519	NR	NR
	Fd	BX		7108 - D184	MD184	R40H5010	R40H5519	NR	NR
	Fd	BX		7108 - D184	MD184	R40H5010	R40H5519	NR	NR
	Fd	BX		7108 - D184	MD184	R40H5010	R40H5519	NR	NR
	Fd	BX		7108 - D184	MD184	R40H5010	R40H5519	NR	NR
	Rd	BX		7142 - D225	MD225	R40H5010	R40H5522	NR	NR
	Rd	BX		7142 - D225	MD225	R40H5010	R40H5522	NR	NR
	Rd	BX		7142 - D225	MD225	R40H5010	R40H5522	NR	NR
	Rd	BX		7108 - D184	MD184	R40H5010	R40H5519	NR	NR
	Rd	BX		7142 - D225	MD225	R40H5010	R40H5522	NR	NR
	Rd	BX		7108 - D184	MD184	R40H5010	R40H5519	NR	NR
	Rd	BX		7142 - D225	MD225	R40H5010	R40H5522	NR	NR
	Rd	BX		7108 - D184	MD184	R40H5010	R40H5519	NR	NR
	Rd	BX		7108 - D184	MD184	R40H5010	R40H5519	NR	NR
	Rd	BX		7142 - D225	MD225	R40H5010	R40H5522	NR	NR
	Rd	BX		7108 - D184	MD184	R40H5010	R40H5519	NR	NR
	Rd	BX		7142 - D225	MD225	R40H5010	R40H5522	NR	NR
	Rd	BX		7108 - D184	MD184	R40H5010	R40H5519	NR	NR
	Rd	BX		7142 - D225	MD225	R40H5010	R40H5522	NR	NR
	Rd	BX		7108 - D184	MD184	R40H5010	R40H5519	NR	NR
	Rd	BX		7142 - D225	MD225	R40H5010	R40H5522	NR	NR
	Rd	BX		7108 - D184	MD184	R40H5010	R40H5519	NR	NR
	Rd	BX		7142 - D225	MD225	R40H5010	R40H5522	NR	NR
	Rd	BX		7108 - D184	MD184	R40H5010	R40H5519	NR	NR
	Rd	BX		7142 - D225	MD225	R40H5010	R40H5522	NR	NR
	Rd	BX		7142 - D225	MD225	R40H5010	R40H5522	NR	NR

37 - Also available as a New unit
72 - Phenolic/Steel Face
267 - 10 Stud, U Shaped

52 - 18" Length
201 - Steel Piston
268 - 5 Stud, Hat Shape

53 - Power Brakes
266 - 10 Stud, Hat Shaped
269 - 5 Stud, U Shape

MERITOR DRUM OR ROTOR NO.	CALIPER OR CYLINDER BORE SIZE	MERITOR CALIPER OR WHEEL CYLINDER (LEFT)	MERITOR CALIPER OR WHEEL CYLINDER (RIGHT)	MERITOR CALIPER OR WHEEL CYLINDER REPAIR KIT	MERITOR CALIPER PISTON	MERITOR MASTER CYLINDER	MERITOR MASTER CYLINDER KIT	MERITOR BRAKE HOSE (LEFT)	MERITOR BRAKE HOSE (RIGHT)
									ITE(Cont.)
									160, 1600, 1650 SERIES(Cont.)
23-123572-004[271]	3-3/8 "	R42R55099	R42R55098[37]	R4066780	R4090021[201]	N/A[53]	-	R458635	R458635
23-122527-002[272]	2-19/32 "	R42R55314	R42R55314[37]	R40107771	R4090100P[72]	N/A[53]	-	R458635	R458635
23-123572-004[271]	2-19/32 "	R42R55314	R42R55314[37]	R40107771	R4090100P[72]	N/A[53]	-	R458632	R458632
R44141476[268]	3-3/8 "	R42R55099	R42R55098[37]	R4066780	R4090021[201]	N/A[53]	-	R458636	R458636
23-123552-004[266]	2-19/32 "	R42R55314	R42R55314[37]	R40107771	R4090100P[72]	N/A[53]	-	N/A	N/A
R44141858[275]	2-19/32 "	R42R55314	R42R55314[37]	R40107771	R4090100P[72]	N/A[53]	-	N/A	N/A
R44141476[268]	2-19/32 "	R42R55314	R42R55314[37]	R40107771	R4090100P[72]	N/A[53]	-	R458636	R458636
23-123552-004[266]	3-3/8 "	R42R55099	R42R55098[37]	R4066780	R4090021[201]	N/A[53]	-	R458632	R458632
R44141858[275]	3-3/8 "	R42R55099	R42R55098[37]	R4066780	R4090021[201]	N/A[53]	-	R458632	R458632
R44141476[268]	2-19/32 "	R42R55314	R42R55314[37]	R40107771	R4090100P[72]	N/A[53]	-	N/A	N/A
R44141858[275]	2-7/8 "	R42R55250	R42R55250[37]	R4066365	R4090096[72]	N/A[53]	-	R458635	R458635
23-123572-004[271]	2-7/8 "	R42R55250	R42R55250[37]	R4066365	R4090096[72]	N/A[53]	-	N/A	N/A
23-122527-002[272]	2-19/32 "	R42R55314	R42R55314[37]	R40107771	R4090100P[72]	N/A[53]	-	N/A	N/A
23-123552-004[266]	2-19/32 "	R42R55314	R42R55314[37]	R40107771	R4090100P[72]	N/A[53]	-	R458632	R458632
R44141476[268]	3-3/8 "	R42R55099	R42R55098[37]	R4066780	R4090021[201]	N/A[53]	-	N/A	N/A
23-122527-002[272]	3-3/8 "	R42R55099	R42R55098[37]	R4066780	R4090021[201]	N/A[53]	-	R458632	R458632
23-123572-004[271]	3-3/8 "	R42R55099	R42R55098[37]	R4066780	R4090021[201]	N/A[53]	-	N/A	N/A
R44141858[275]	2-7/8 "	R42R55250	R42R55250[37]	R4066365	R4090096[72]	N/A[53]	-	R458636	R458636
23-122701-002[269]	2-19/32 "	R42R55314	R42R55314[37]	R40107771	R4090100P[72]	N/A[53]	-	R458632	R458632
23-123572-004[271]	2-7/8 "	R42R55250	R42R55250[37]	R4066365	R4090096[72]	N/A[53]	-	R458635	R458635
23-122701-002[269]	3-3/8 "	R42R55099	R42R55098[37]	R4066780	R4090021[201]	N/A[53]	-	R458632	R458632
23-123552-004[266]	2-7/8 "	R42R55250	R42R55250[37]	R4066365	R4090096[72]	N/A[53]	-	R458636	R458636
23-123572-004[271]	3-3/8 "	R42R55099	R42R55098[37]	R4066780	R4090021[201]	N/A[53]	-	R458636	R458636
23-123552-004[266]	2-7/8 "	R42R55250	R42R55250[37]	R4066365	R4090096[72]	N/A[53]	-	R458632	R458632
R44141858[275]	2-7/8 "	R42R55250	R42R55250[37]	R4066365	R4090096[72]	N/A[53]	-	N/A	N/A
23-122920-002[273]	2-7/8 "	R42R55250	R42R55250[37]	R4066365	R4090096[72]	N/A[53]	-	R458632	R458632
23-123552-004[266]	2-7/8 "	R42R55250	R42R55250[37]	R4066365	R4090096[72]	N/A[53]	-	R458635	R458635
23-122701-002[269]	3-3/8 "	R42R55099	R42R55098[37]	R4066780	R4090021[201]	N/A[53]	-	R458635	R458635
R44141858[275]	3-3/8 "	R42R55099	R42R55098[37]	R4066780	R4090021[201]	N/A[53]	-	R458636	R458636
23-123552-004[266]	3-3/8 "	R42R55099	R42R55098[37]	R4066780	R4090021[201]	N/A[53]	-	R458636	R458636
23-122701-002[269]	2-7/8 "	R42R55250	R42R55250[37]	R4066365	R4090096[72]	N/A[53]	-	R458635	R458635
R44141476[268]	2-19/32 "	R42R55314	R42R55314[37]	R40107771	R4090100P[72]	N/A[53]	-	R458632	R458632
R44141476[268]	2-7/8 "	R42R55250	R42R55250[37]	R4066365	R4090096[72]	N/A[53]	-	R458635	R458635
23-123552-004[266]	2-7/8 "	R42R55250	R42R55250[37]	R4066365	R4090096[72]	N/A[53]	-	N/A	N/A
R44141476[268]	2-7/8 "	R42R55250	R42R55250[37]	R4066365	R4090096[72]	N/A[53]	-	R458632	R458632
23-122920-002[273]	2-19/32 "	R42R55314	R42R55314[37]	R40107771	R4090100P[72]	N/A[53]	-	R458635	R458635
23-122701-002[269]	2-19/32 "	R42R55314	R42R55314[37]	R40107771	R4090100P[72]	N/A[53]	-	R458635	R458635
23-123552-004[266]	3-3/8 "	R42R55099	R42R55098[37]	R4066780	R4090021[201]	N/A[53]	-	R458635	R458635
23-122527-002[272]	2-19/32 "	R42R55314	R42R55314[37]	R40107771	R4090100P[72]	N/A[53]	-	R458636	R458636
23-122920-002[273]	2-19/32 "	R42R55314	R42R55314[37]	R40107771	R4090100P[72]	N/A[53]	-	R458632	R458632
R44141858[275]	3-3/8 "	R42R55099	R42R55098[37]	R4066780	R4090021[201]	N/A[53]	-	R458635	R458635
23-122920-002[273]	3-3/8 "	R42R55099	R42R55098[37]	R4066780	R4090021[201]	N/A[53]	-	R458632	R458632
R44141858[275]	2-19/32 "	R42R55314	R42R55314[37]	R40107771	R4090100P[72]	N/A[53]	-	R458632	R458632
23-123572-004[271]	2-19/32 "	R42R55314	R42R55314[37]	R40107771	R4090100P[72]	N/A[53]	-	R458635	R458635
23-122701-002[269]	2-19/32 "	R42R55314	R42R55314[37]	R40107771	R4090100P[72]	N/A[53]	-	N/A	N/A
23-122527-002[272]	3-3/8 "	R42R55099	R42R55098[37]	R4066780	R4090021[201]	N/A[53]	-	R458636	R458636
R44141629[269]	2-7/8 "	R42R55250	R42R55250[37]	R4066365	R4090096[72]	-	-	R4577512	R4577512
23-123552-004[266]	2-7/8 "	R42R55250	R42R55250[37]	R4066365	R4090096[72]	-	-	R4577512	R4577512
R44141608[267]	2-7/8 "	R42R55250	R42R55250[37]	R4066365	R4090096[72]	-	-	R4577512	R4577512
R44141629[269]	2-19/32 "	R42R55314	R42R55314[37]	R40107771	R4090100P[72]	-	-	R458634[52]	R458634
R44141628[269]	2-7/8 "	R42R55250	R42R55250[37]	R4066365	R4090096[72]	-	-	R458634[52]	R458634
R44141608[267]	2-19/32 "	R42R55314	R42R55314[37]	R40107771	R4090100P[72]	-	-	R4577512	R4577512
23-123572-004[271]	2-7/8 "	R42R55250	R42R55250[37]	R4066365	R4090096[72]	-	-	R4577512	R4577512
R44141628[269]	2-19/32 "	R42R55314	R42R55314[37]	R40107771	R4090100P[72]	-	-	R458634[52]	R458634
23-123552-004[266]	2-19/32 "	R42R55314	R42R55314[37]	R40107771	R4090100P[72]	-	-	R4577512	R4577512
R44141627[270]	2-7/8 "	R42R55250	R42R55250[37]	R4066365	R4090096[72]	-	-	R4577512	R4577512
R44141608[267]	2-19/32 "	R42R55314	R42R55314[37]	R40107771	R4090100P[72]	-	-	R458634[52]	R458634
23-123572-004[271]	2-7/8 "	R42R55250	R42R55250[37]	R4066365	R4090096[72]	-	-	R458634[52]	R458634
R44141629[269]	2-19/32 "	R42R55314	R42R55314[37]	R40107771	R4090100P[72]	-	-	R4577512	R4577512
R44141627[270]	2-7/8 "	R42R55250	R42R55250[37]	R4066365	R4090096[72]	-	-	R458634[52]	R458634
23-123572-004[271]	2-19/32 "	R42R55314	R42R55314[37]	R40107771	R4090100P[72]	-	-	R4577512	R4577512
R44141629[269]	2-7/8 "	R42R55250	R42R55250[37]	R4066365	R4090096[72]	-	-	R458634[52]	R458634
R44141627[270]	2-19/32 "	R42R55314	R42R55314[37]	R40107771	R4090100P[72]	-	-	R4577512	R4577512
R44141628[269]	2-7/8 "	R42R55250	R42R55250[37]	R4066365	R4090096[72]	-	-	R4577512	R4577512
R44141608[267]	2-7/8 "	R42R55250	R42R55250[37]	R4066365	R4090096[72]	-	-	R458634[52]	R458634

270 - 5 Stud, U Shape, .766 Dia. Studs
271 - 6 Stud, Hat Shape
272 - 6 Stud, U Shape
273 - 5 Stud, U Shape, .780 Dia. Studs
275 - 5 Stud, U Shape, .656 Dia. Studs

MAKE MODEL YEAR AXLE CODE AXLE WEIGHT	AXLE & BRK. TYPE	BRK. MFG.	BRAKE SIZE	FMSI	MERITOR DISC PAD OR BRAKE SHOE	MERITOR GUIDE PIN OR RETURN SPRING KIT	MERITOR CALIPER HWD. KIT OR RETURN SPRING KIT	MERITOR ADJUSTER KIT (LEFT WHEEL)	MERITOR ADJUSTER KIT (RIGHT WHEEL)
ITE(Cont.)									
160, 1600, 1650 SERIES(Cont.)									
1987									
	Rd	BX		7142 - D225	MD225	R40H5010	R40H5522	NR	NR
	Rd	BX		7108 - D184	MD184	R40H5010	R40H5519	NR	NR
	Rd	BX		7108 - D184	MD184	R40H5010	R40H5519	NR	NR
	Rd	BX		7108 - D184	MD184	R40H5010	R40H5519	NR	NR
	Rd	BX		7108 - D184	MD184	R40H5010	R40H5519	NR	NR
1986 C1610, C1650 Cargostar Tilt Cab									
	Fd	BX		7108 - D184	MD184	R40H5010	R40H5519	NR	NR
	Fd	BX		7142 - D225	MD225	R40H5010	R40H5522	NR	NR
	Rd	BX		7142 - D225	MD225	R40H5010	R40H5522	NR	NR
S1600, S1652, S1654 Conventional									
	Fd	BX		7108 - D184	MD184	R40H5010	R40H5519	NR	NR
	Fd	BX		7108 - D184	MD184	R40H5010	R40H5519	NR	NR
	Fd	BX		7108 - D184	MD184	R40H5010	R40H5519	NR	NR
	Fd	BX		7142 - D225	MD225	R40H5010	R40H5522	NR	NR
	Fd	BX		7142 - D225	MD225	R40H5010	R40H5522	NR	NR
	Fd	BX		7108 - D184	MD184	R40H5010	R40H5519	NR	NR
	Fd	BX		7108 - D184	MD184	R40H5010	R40H5519	NR	NR
	Fd	BX		7108 - D184	MD184	R40H5010	R40H5519	NR	NR
	Fd	BX		7142 - D225	MD225	R40H5010	R40H5522	NR	NR
	Fd	BX		7142 - D225	MD225	R40H5010	R40H5522	NR	NR
	Fd	BX		7142 - D225	MD225	R40H5010	R40H5522	NR	NR
	Fd	BX		7108 - D184	MD184	R40H5010	R40H5519	NR	NR
	Fd	BX		7108 - D184	MD184	R40H5010	R40H5519	NR	NR
	Fd	BX		7108 - D184	MD184	R40H5010	R40H5519	NR	NR
	Fd	BX		7108 - D184	MD184	R40H5010	R40H5519	NR	NR
	Fd	BX		7142 - D225	MD225	R40H5010	R40H5522	NR	NR
	Fd	BX		7142 - D225	MD225	R40H5010	R40H5522	NR	NR
	Fd	BX		7142 - D225	MD225	R40H5010	R40H5522	NR	NR
	Fd	BX		7108 - D184	MD184	R40H5010	R40H5519	NR	NR
	Fd	BX		7108 - D184	MD184	R40H5010	R40H5519	NR	NR
	Fd	BX		7108 - D184	MD184	R40H5010	R40H5519	NR	NR
	Fd	BX		7142 - D225	MD225	R40H5010	R40H5522	NR	NR
	Fd	BX		7142 - D225	MD225	R40H5010	R40H5522	NR	NR
	Fd	BX		7108 - D184	MD184	R40H5010	R40H5519	NR	NR
	Fd	BX		7142 - D225	MD225	R40H5010	R40H5522	NR	NR
	Fd	BX		7108 - D184	MD184	R40H5010	R40H5519	NR	NR
	Fd	BX		7142 - D225	MD225	R40H5010	R40H5522	NR	NR
	Fd	BX		7108 - D184	MD184	R40H5010	R40H5519	NR	NR
	Fd	BX		7108 - D184	MD184	R40H5010	R40H5519	NR	NR
	Fd	BX		7108 - D184	MD184	R40H5010	R40H5519	NR	NR
	Fd	BX		7142 - D225	MD225	R40H5010	R40H5522	NR	NR
	Fd	BX		7142 - D225	MD225	R40H5010	R40H5522	NR	NR
	Fd	BX		7142 - D225	MD225	R40H5010	R40H5522	NR	NR
	Fd	BX		7108 - D184	MD184	R40H5010	R40H5519	NR	NR
	Fd	BX		7142 - D225	MD225	R40H5010	R40H5522	NR	NR
	Fd	BX		7108 - D184	MD184	R40H5010	R40H5519	NR	NR
	Fd	BX		7108 - D184	MD184	R40H5010	R40H5519	NR	NR
	Fd	BX		7108 - D184	MD184	R40H5010	R40H5519	NR	NR
	Fd	BX		7142 - D225	MD225	R40H5010	R40H5522	NR	NR
	Fd	BX		7142 - D225	MD225	R40H5010	R40H5522	NR	NR
	Fd	BX		7142 - D225	MD225	R40H5010	R40H5522	NR	NR
	Fd	BX		7108 - D184	MD184	R40H5010	R40H5519	NR	NR
	Fd	BX		7142 - D225	MD225	R40H5010	R40H5522	NR	NR
	Fd	BX		7108 - D184	MD184	R40H5010	R40H5519	NR	NR
	Fd	BX		7108 - D184	MD184	R40H5010	R40H5519	NR	NR
	Fd	BX		7108 - D184	MD184	R40H5010	R40H5519	NR	NR
	Fd	BX		7108 - D184	MD184	R40H5010	R40H5519	NR	NR
	Fd	BX		7108 - D184	MD184	R40H5010	R40H5519	NR	NR
	Fd	BX		7142 - D225	MD225	R40H5010	R40H5522	NR	NR
	Fd	BX		7142 - D225	MD225	R40H5010	R40H5522	NR	NR
	Fd	BX		7108 - D184	MD184	R40H5010	R40H5519	NR	NR
	Fd	BX		7108 - D184	MD184	R40H5010	R40H5519	NR	NR
	Fd	BX		7108 - D184	MD184	R40H5010	R40H5519	NR	NR
	Fd	BX		7108 - D184	MD184	R40H5010	R40H5519	NR	NR
	Fd	BX		7108 - D184	MD184	R40H5010	R40H5519	NR	NR

37 - Also available as a New unit
72 - Phenolic/Steel Face
268 - 5 Stud, Hat Shape

52 - 18" Length
201 - Steel Piston
269 - 5 Stud, U Shape

53 - Power Brakes
266 - 10 Stud, Hat Shaped
270 - 5 Stud, U Shape, .766 Dia. Studs

MERITOR DRUM OR ROTOR NO.	CALIPER OR CYLINDER BORE SIZE	MERITOR CALIPER OR WHEEL CYLINDER (LEFT)	MERITOR CALIPER OR WHEEL CYLINDER (RIGHT)	MERITOR CALIPER OR WHEEL CYLINDER REPAIR KIT	MERITOR CALIPER PISTON	MERITOR MASTER CYLINDER	MERITOR MASTER CYLINDER KIT	MERITOR BRAKE HOSE (LEFT)	MERITOR BRAKE HOSE (RIGHT)
									ITE(Cont.)
									160, 1600, 1650 SERIES(Cont.)
23-123552-004[266]	2-7/8 "	R42R55250	R42R55250[37]	R4066365	R4090096[72]	-	-	R458634[52]	R458634
23-123572-004[271]	2-19/32 "	R42R55314	R42R55314[37]	R40107771	R4090100P[72]	-	-	R458634[52]	R458634
R44141627[270]	2-19/32 "	R42R55314	R42R55314[37]	R40107771	R4090100P[72]	-	-	R458634[52]	R458634
R44141628[269]	2-19/32 "	R42R55314	R42R55314[37]	R40107771	R4090100P[72]	-	-	R4577512	R4577512
23-123552-004[266]	2-19/32 "	R42R55314	R42R55314[37]	R40107771	R4090100P[72]	-	-	R458634[52]	R458634
23-122527-002[272]	2-19/32 "	R42R55314	R42R55314[37]	R40107771	R4090100P[72]	N/A[53]	-	-	-
23-122701-002[269]	2-7/8 "	R42R55250	R42R55250[37]	R4066365	R4090096[72]	-	-	-	-
23-122527-002[272]	2-7/8 "	R42R55250	R42R55250[37]	R4066365	R4090096[72]	-	-	-	-
23-122920-002[273]	2-19/32 "	R42R55314	R42R55314[37]	R40107771	R4090100P[72]	N/A[53]	-	R458635	R458635
23-123552-004[266]	2-19/32 "	R42R55314	R42R55314[37]	R40107771	R4090100P[72]	N/A[53]	-	R458632	R458632
R44141858[275]	3-3/8 "	R42R55099	R42R55098[37]	R4066780	R4090021[201]	N/A[53]	-	R458635	R458635
23-123572-004[271]	2-7/8 "	R42R55250	R42R55250[37]	R4066365	R4090096[72]	N/A[53]	-	R458635	R458635
R44141858[275]	2-7/8 "	R42R55250	R42R55250[37]	R4066365	R4090096[72]	N/A[53]	-	R458636	R458636
23-123572-004[271]	2-19/32 "	R42R55314	R42R55314[37]	R40107771	R4090100P[72]	N/A[53]	-	R458636	R458636
23-122527-002[272]	3-3/8 "	R42R55099	R42R55098[37]	R4066780	R4090021[201]	N/A[53]	-	R458632	R458632
23-122920-002[273]	3-3/8 "	R42R55099	R42R55098[37]	R4066780	R4090021[201]	N/A[53]	-	R458632	R458632
23-123572-004[271]	2-7/8 "	R42R55250	R42R55250[37]	R4066365	R4090096[72]	N/A[53]	-	R458632	R458632
R44141858[275]	2-7/8 "	R42R55250	R42R55250[37]	R4066365	R4090096[72]	N/A[53]	-	R458632	R458632
23-122527-002[272]	2-7/8 "	R42R55250	R42R55250[37]	R4066365	R4090096[72]	N/A[53]	-	N/A	N/A
R44141858[275]	3-3/8 "	R42R55099	R42R55098[37]	R4066780	R4090021[201]	N/A[53]	-	R458636	R458636
R44141476[268]	3-3/8 "	R42R55099	R42R55098[37]	R4066780	R4090021[201]	N/A[53]	-	R458636	R458636
23-123572-004[271]	2-19/32 "	R42R55314	R42R55314[37]	R40107771	R4090100P[72]	N/A[53]	-	R458635	R458635
23-122527-002[272]	2-19/32 "	R42R55314	R42R55314[37]	R40107771	R4090100P[72]	N/A[53]	-	R458635	R458635
23-123552-004[266]	2-7/8 "	R42R55250	R42R55250[37]	R4066365	R4090096[72]	N/A[53]	-	R458632	R458632
23-122701-002[269]	2-7/8 "	R42R55250	R42R55250[37]	R4066365	R4090096[72]	N/A[53]	-	N/A	N/A
23-122701-002[269]	2-7/8 "	R42R55250	R42R55250[37]	R4066365	R4090096[72]	N/A[53]	-	R458636	R458636
R44141476[268]	3-3/8 "	R42R55099	R42R55098[37]	R4066780	R4090021[201]	N/A[53]	-	N/A	N/A
23-123572-004[271]	3-3/8 "	R42R55099	R42R55098[37]	R4066780	R4090021[201]	N/A[53]	-	R458635	R458635
R44141476[268]	2-19/32 "	R42R55314	R42R55314[37]	R40107771	R4090100P[72]	N/A[53]	-	N/A	N/A
23-122701-002[269]	2-7/8 "	R42R55250	R42R55250[37]	R4066365	R4090096[72]	N/A[53]	-	R458635	R458635
R44141476[268]	2-7/8 "	R42R55250	R42R55250[37]	R4066365	R4090096[72]	N/A[53]	-	R458635	R458635
23-122920-002[273]	2-19/32 "	R42R55314	R42R55314[37]	R40107771	R4090100P[72]	N/A[53]	-	N/A	N/A
R44141476[268]	2-7/8 "	R42R55250	R42R55250[37]	R4066365	R4090096[72]	N/A[53]	-	R458636	R458636
23-122527-002[272]	3-3/8 "	R42R55099	R42R55098[37]	R4066780	R4090021[201]	N/A[53]	-	R458636	R458636
23-122920-002[273]	2-7/8 "	R42R55250	R42R55250[37]	R4066365	R4090096[72]	N/A[53]	-	R458635	R458635
23-123572-004[271]	2-19/32 "	R42R55314	R42R55314[37]	R40107771	R4090100P[72]	N/A[53]	-	R458632	R458632
R44141476[268]	2-19/32 "	R42R55314	R42R55314[37]	R40107771	R4090100P[72]	N/A[53]	-	R458636	R458636
23-123572-004[271]	3-3/8 "	R42R55099	R42R55098[37]	R4066780	R4090021[201]	N/A[53]	-	R458632	R458632
23-122920-002[273]	2-7/8 "	R42R55250	R42R55250[37]	R4066365	R4090096[72]	N/A[53]	-	R458636	R458636
23-122701-002[269]	2-7/8 "	R42R55250	R42R55250[37]	R4066365	R4090096[72]	N/A[53]	-	R458632	R458632
23-122920-002[273]	2-7/8 "	R42R55250	R42R55250[37]	R4066365	R4090096[72]	N/A[53]	-	N/A	N/A
23-123552-004[266]	2-19/32 "	R42R55314	R42R55314[37]	R40107771	R4090100P[72]	N/A[53]	-	R458635	R458635
R44141476[268]	2-7/8 "	R42R55250	R42R55250[37]	R4066365	R4090096[72]	N/A[53]	-	N/A	N/A
R44141858[275]	2-19/32 "	R42R55314	R42R55314[37]	R40107771	R4090100P[72]	N/A[53]	-	N/A	N/A
R44141476[268]	2-19/32 "	R42R55314	R42R55314[37]	R40107771	R4090100P[72]	N/A[53]	-	R458632	R458632
23-122701-002[269]	3-3/8 "	R42R55099	R42R55098[37]	R4066780	R4090021[201]	N/A[53]	-	R458635	R458635
23-123572-004[271]	3-3/8 "	R42R55099	R42R55098[37]	R4066780	R4090021[201]	N/A[53]	-	R458636	R458636
R44141858[275]	2-7/8 "	R42R55250	R42R55250[37]	R4066365	R4090096[72]	N/A[53]	-	N/A	N/A
23-122701-002[269]	2-19/32 "	R42R55314	R42R55314[37]	R40107771	R4090100P[72]	N/A[53]	-	N/A	N/A
23-122701-002[269]	3-3/8 "	R42R55099	R42R55098[37]	R4066780	R4090021[201]	N/A[53]	-	R458636	R458636
23-123552-004[266]	3-3/8 "	R42R55099	R42R55098[37]	R4066780	R4090021[201]	N/A[53]	-	R458635	R458635
R44141476[268]	2-19/32 "	R42R55314	R42R55314[37]	R40107771	R4090100P[72]	N/A[53]	-	R458635	R458635
23-123572-004[271]	3-3/8 "	R42R55099	R42R55098[37]	R4066780	R4090021[201]	N/A[53]	-	N/A	N/A
23-122701-002[269]	3-3/8 "	R42R55099	R42R55098[37]	R4066780	R4090021[201]	N/A[53]	-	R458632	R458632
23-123552-004[266]	2-7/8 "	R42R55250	R42R55250[37]	R4066365	R4090096[72]	N/A[53]	-	R458635	R458635
23-123572-004[271]	2-7/8 "	R42R55250	R42R55250[37]	R4066365	R4090096[72]	N/A[53]	-	R458636	R458636
R44141476[268]	3-3/8 "	R42R55099	R42R55098[37]	R4066780	R4090021[201]	N/A[53]	-	R458635	R458635
23-122920-002[273]	2-19/32 "	R42R55314	R42R55314[37]	R40107771	R4090100P[72]	N/A[53]	-	R458632	R458632
23-122920-002[273]	3-3/8 "	R42R55099	R42R55098[37]	R4066780	R4090021[201]	N/A[53]	-	N/A	N/A
23-122701-002[269]	2-19/32 "	R42R55314	R42R55314[37]	R40107771	R4090100P[72]	N/A[53]	-	R458636	R458636
23-123552-004[266]	3-3/8 "	R42R55099	R42R55098[37]	R4066780	R4090021[201]	N/A[53]	-	N/A	N/A

271 - 6 Stud, Hat Shape
272 - 6 Stud, U Shape
273 - 5 Stud, U Shape, .780 Dia. Studs
275 - 5 Stud, U Shape, .656 Dia. Studs

MAKE MODEL YEAR AXLE CODE AXLE WEIGHT	AXLE & BRK. TYPE	BRK. MFG.	BRAKE SIZE	FMSI	MERITOR DISC PAD OR BRAKE SHOE	MERITOR GUIDE PIN OR RETURN SPRING KIT	MERITOR CALIPER HWD. KIT OR RETURN SPRING KIT	MERITOR ADJUSTER KIT (LEFT WHEEL)	MERITOR ADJUSTER KIT (RIGHT WHEEL)
ITE(Cont.)									
160, 1600, 1650 SERIES(Cont.)									
1986									
S1600, S1652, S1654									
Conventional	Fd	BX		7108 - D184	MD184	R40H5010	R40H5519	NR	NR
	Fd	BX		7108 - D184	MD184	R40H5010	R40H5519	NR	NR
	Fd	BX		7108 - D184	MD184	R40H5010	R40H5519	NR	NR
	Fd	BX		7108 - D184	MD184	R40H5010	R40H5519	NR	NR
	Fd	BX		7108 - D184	MD184	R40H5010	R40H5519	NR	NR
	Fd	BX		7142 - D225	MD225	R40H5010	R40H5522	NR	NR
	Fd	BX		7108 - D184	MD184	R40H5010	R40H5519	NR	NR
	Fd	BX		7108 - D184	MD184	R40H5010	R40H5519	NR	NR
	Fd	BX		7142 - D225	MD225	R40H5010	R40H5522	NR	NR
	Fd	BX		7108 - D184	MD184	R40H5010	R40H5519	NR	NR
	Fd	BX		7142 - D225	MD225	R40H5010	R40H5522	NR	NR
	Fd	BX		7108 - D184	MD184	R40H5010	R40H5519	NR	NR
	Fd	BX		7108 - D184	MD184	R40H5010	R40H5519	NR	NR
	Fd	BX		7108 - D184	MD184	R40H5010	R40H5519	NR	NR
	Fd	BX		7108 - D184	MD184	R40H5010	R40H5519	NR	NR
	Fd	BX		7108 - D184	MD184	R40H5010	R40H5519	NR	NR
	Fd	BX		7142 - D225	MD225	R40H5010	R40H5522	NR	NR
	Fd	BX		7108 - D184	MD184	R40H5010	R40H5519	NR	NR
	Fd	BX		7142 - D225	MD225	R40H5010	R40H5522	NR	NR
	Fd	BX		7142 - D225	MD225	R40H5010	R40H5522	NR	NR
	Fd	BX		7108 - D184	MD184	R40H5010	R40H5519	NR	NR
	Fd	BX		7142 - D225	MD225	R40H5010	R40H5522	NR	NR
	Fd	BX		7142 - D225	MD225	R40H5010	R40H5522	NR	NR
	Fd	BX		7108 - D184	MD184	R40H5010	R40H5519	NR	NR
	Fd	BX		7108 - D184	MD184	R40H5010	R40H5519	NR	NR
	Fd	BX		7142 - D225	MD225	R40H5010	R40H5522	NR	NR
	Fd	BX		7108 - D184	MD184	R40H5010	R40H5519	NR	NR
	Fd	BX		7108 - D184	MD184	R40H5010	R40H5519	NR	NR
	Fd	BX		7108 - D184	MD184	R40H5010	R40H5519	NR	NR
	Fd	BX		7108 - D184	MD184	R40H5010	R40H5519	NR	NR
	Fd	BX		7108 - D184	MD184	R40H5010	R40H5519	NR	NR
	Rd	BX		7142 - D225	MD225	R40H5010	R40H5522	NR	NR
	Rd	BX		7108 - D184	MD184	R40H5010	R40H5519	NR	NR
	Rd	BX		7108 - D184	MD184	R40H5010	R40H5519	NR	NR
	Rd	BX		7142 - D225	MD225	R40H5010	R40H5522	NR	NR
	Rd	BX		7108 - D184	MD184	R40H5010	R40H5519	NR	NR
	Rd	BX		7108 - D184	MD184	R40H5010	R40H5519	NR	NR
	Rd	BX		7108 - D184	MD184	R40H5010	R40H5519	NR	NR
	Rd	BX		7142 - D225	MD225	R40H5010	R40H5522	NR	NR
	Rd	BX		7142 - D225	MD225	R40H5010	R40H5522	NR	NR
	Rd	BX		7142 - D225	MD225	R40H5010	R40H5522	NR	NR
	Rd	BX		7108 - D184	MD184	R40H5010	R40H5519	NR	NR
	Rd	BX		7142 - D225	MD225	R40H5010	R40H5522	NR	NR
	Rd	BX		7142 - D225	MD225	R40H5010	R40H5522	NR	NR
	Rd	BX		7108 - D184	MD184	R40H5010	R40H5519	NR	NR
	Rd	BX		7108 - D184	MD184	R40H5010	R40H5519	NR	NR
	Rd	BX		7142 - D225	MD225	R40H5010	R40H5522	NR	NR
	Rd	BX		7142 - D225	MD225	R40H5010	R40H5522	NR	NR
	Rd	BX		7142 - D225	MD225	R40H5010	R40H5522	NR	NR
	Rd	BX		7108 - D184	MD184	R40H5010	R40H5519	NR	NR
	Rd	BX		7108 - D184	MD184	R40H5010	R40H5519	NR	NR
	Rd	BX		7108 - D184	MD184	R40H5010	R40H5519	NR	NR
	Rd	BX		7108 - D184	MD184	R40H5010	R40H5519	NR	NR
	Rd	BX		7142 - D225	MD225	R40H5010	R40H5522	NR	NR
	Rd	BX		7142 - D225	MD225	R40H5010	R40H5522	NR	NR
1985									
C1610, C1650 Cargostar Tilt									
Cab	Fd	BX		7142 - D225	MD225	R40H5010	R40H5522	NR	NR
	Fd	BX		7108 - D184	MD184	R40H5010	R40H5519	NR	NR
	Rd	BX		7142 - D225	MD225	R40H5010	R40H5522	NR	NR
S1600, S1652, S1654									
Conventional	Fd	BX		7108 - D184	MD184	R40H5010	R40H5519	NR	NR
	Fd	BX		7108 - D184	MD184	R40H5010	R40H5519	NR	NR

37 - Also available as a New unit
72 - Phenolic/Steel Face
267 - 10 Stud, U Shaped

52 - 18" Length
201 - Steel Piston
268 - 5 Stud, Hat Shape

53 - Power Brakes
266 - 10 Stud, Hat Shaped
269 - 5 Stud, U Shape

MERITOR DRUM OR ROTOR NO.	CALIPER OR CYLINDER BORE SIZE	MERITOR CALIPER OR WHEEL CYLINDER (LEFT)	MERITOR CALIPER OR WHEEL CYLINDER (RIGHT)	MERITOR CALIPER OR WHEEL CYLINDER REPAIR KIT	MERITOR CALIPER PISTON	MERITOR MASTER CYLINDER	MERITOR MASTER CYLINDER KIT	MERITOR BRAKE HOSE (LEFT)	MERITOR BRAKE HOSE (RIGHT)
									ITE(Cont.)
									160, 1600, 1650 SERIES(Cont.)
23-122701-002[269]	2-19/32 "	R42R55314	R42R55314[37]	R40107771	R4090100P[72]	N/A[53]	-	R458635	R458635
R44141858[275]	3-3/8 "	R42R55099	R42R55098[37]	R4066780	R4090021[201]	N/A[53]	-	N/A	N/A
23-122527-002[272]	2-19/32 "	R42R55314	R42R55314[37]	R40107771	R4090100P[72]	N/A[53]	-	N/A	N/A
23-122701-002[269]	2-19/32 "	R42R55314	R42R55314[37]	R40107771	R4090100P[72]	N/A[53]	-	R458632	R458632
23-122527-002[272]	3-3/8 "	R42R55099	R42R55098[37]	R4066780	R4090021[201]	N/A[53]	-	R458635	R458635
23-122920-002[273]	2-7/8 "	R42R55250	R42R55250[37]	R4066365	R4090096[72]	N/A[53]	-	R458632	R458632
23-123552-004[266]	3-3/8 "	R42R55099	R42R55098[37]	R4066780	R4090021[201]	N/A[53]	-	R458632	R458632
23-122527-002[272]	2-19/32 "	R42R55314	R42R55314[37]	R40107771	R4090100P[72]	N/A[53]	-	R458636	R458636
23-122527-002[272]	2-7/8 "	R42R55250	R42R55250[37]	R4066365	R4090096[72]	N/A[53]	-	R458635	R458635
R44141858[275]	3-3/8 "	R42R55099	R42R55098[37]	R4066780	R4090021[201]	N/A[53]	-	R458632	R458632
R44141476[268]	2-7/8 "	R42R55250	R42R55250[37]	R4066365	R4090096[72]	N/A[53]	-	R458632	R458632
23-122920-002[273]	3-3/8 "	R42R55099	R42R55098[37]	R4066780	R4090021[201]	N/A[53]	-	R458636	R458636
R44141858[275]	2-19/32 "	R42R55314	R42R55314[37]	R40107771	R4090100P[72]	N/A[53]	-	R458635	R458635
R44141858[275]	2-19/32 "	R42R55314	R42R55314[37]	R40107771	R4090100P[72]	N/A[53]	-	R458636	R458636
23-122527-002[272]	3-3/8 "	R42R55099	R42R55098[37]	R4066780	R4090021[201]	N/A[53]	-	N/A	N/A
23-122527-002[272]	2-19/32 "	R42R55314	R42R55314[37]	R40107771	R4090100P[72]	N/A[53]	-	R458632	R458632
R44141858[275]	2-7/8 "	R42R55250	R42R55250[37]	R4066365	R4090096[72]	N/A[53]	-	R458635	R458635
23-123552-004[266]	2-19/32 "	R42R55314	R42R55314[37]	R40107771	R4090100P[72]	N/A[53]	-	N/A	N/A
23-123552-004[266]	2-7/8 "	R42R55250	R42R55250[37]	R4066365	R4090096[72]	N/A[53]	-	N/A	N/A
23-122527-002[272]	2-7/8 "	R42R55250	R42R55250[37]	R4066365	R4090096[72]	N/A[53]	-	R458636	R458636
23-123552-004[266]	3-3/8 "	R42R55099	R42R55098[37]	R4066780	R4090021[201]	N/A[53]	-	R458636	R458636
23-123572-004[271]	2-7/8 "	R42R55250	R42R55250[37]	R4066365	R4090096[72]	N/A[53]	-	N/A	N/A
23-123552-004[266]	2-7/8 "	R42R55250	R42R55250[37]	R4066365	R4090096[72]	N/A[53]	-	R458636	R458636
R44141476[268]	3-3/8 "	R42R55099	R42R55098[37]	R4066780	R4090021[201]	N/A[53]	-	R458632	R458632
23-123572-004[271]	2-19/32 "	R42R55314	R42R55314[37]	R40107771	R4090100P[72]	N/A[53]	-	N/A	N/A
23-122527-002[272]	2-7/8 "	R42R55250	R42R55250[37]	R4066365	R4090096[72]	N/A[53]	-	R458632	R458632
23-122920-002[273]	2-19/32 "	R42R55314	R42R55314[37]	R40107771	R4090100P[72]	N/A[53]	-	R458636	R458636
R44141858[275]	2-19/32 "	R42R55314	R42R55314[37]	R40107771	R4090100P[72]	N/A[53]	-	R458632	R458632
23-122920-002[273]	3-3/8 "	R42R55099	R42R55098[37]	R4066780	R4090021[201]	N/A[53]	-	R458635	R458635
23-123552-004[266]	2-19/32 "	R42R55314	R42R55314[37]	R40107771	R4090100P[72]	N/A[53]	-	R458636	R458636
23-122701-002[269]	3-3/8 "	R42R55099	R42R55098[37]	R4066780	R4090021[201]	N/A[53]	-	N/A	N/A
R44141627[270]	2-7/8 "	R42R55250	R42R55250[37]	R4066365	R4090096[72]	-	-	R458634[52]	R458634
23-123552-004[266]	2-19/32 "	R42R55314	R42R55314[37]	R40107771	R4090100P[72]	-	-	R4577512	R4577512
R44141629[269]	2-19/32 "	R42R55314	R42R55314[37]	R40107771	R4090100P[72]	-	-	R458634[52]	R458634
23-123572-004[271]	2-7/8 "	R42R55250	R42R55250[37]	R4066365	R4090096[72]	-	-	R4577512	R4577512
23-123552-004[266]	2-19/32 "	R42R55314	R42R55314[37]	R40107771	R4090100P[72]	-	-	R458634[52]	R458634
R44141627[270]	2-19/32 "	R42R55314	R42R55314[37]	R40107771	R4090100P[72]	-	-	R4577512	R4577512
R44141608[267]	2-19/32 "	R42R55314	R42R55314[37]	R40107771	R4090100P[72]	-	-	R4577512	R4577512
R44141629[269]	2-7/8 "	R42R55250	R42R55250[37]	R4066365	R4090096[72]	-	-	R458634[52]	R458634
R44141629[269]	2-7/8 "	R42R55250	R42R55250[37]	R4066365	R4090096[72]	-	-	R4577512	R4577512
23-123552-004[266]	2-7/8 "	R42R55250	R42R55250[37]	R4066365	R4090096[72]	-	-	R458634[52]	R458634
R44141627[270]	2-19/32 "	R42R55314	R42R55314[37]	R40107771	R4090100P[72]	-	-	R458634[52]	R458634
R44141608[267]	2-7/8 "	R42R55250	R42R55250[37]	R4066365	R4090096[72]	-	-	R4577512	R4577512
R44141628[269]	2-7/8 "	R42R55250	R42R55250[37]	R4066365	R4090096[72]	-	-	R458634[52]	R458634
R44141629[269]	2-19/32 "	R42R55314	R42R55314[37]	R40107771	R4090100P[72]	-	-	R4577512	R4577512
R44141608[267]	2-19/32 "	R42R55314	R42R55314[37]	R40107771	R4090100P[72]	-	-	R458634[52]	R458634
R44141627[270]	2-7/8 "	R42R55250	R42R55250[37]	R4066365	R4090096[72]	-	-	R4577512	R4577512
R44141628[269]	2-7/8 "	R42R55250	R42R55250[37]	R4066365	R4090096[72]	-	-	R4577512	R4577512
R44141608[267]	2-7/8 "	R42R55250	R42R55250[37]	R4066365	R4090096[72]	-	-	R458634[52]	R458634
23-123572-004[271]	2-19/32 "	R42R55314	R42R55314[37]	R40107771	R4090100P[72]	-	-	R4577512	R4577512
23-123572-004[271]	2-19/32 "	R42R55314	R42R55314[37]	R40107771	R4090100P[72]	-	-	R458634[52]	R458634
R44141628[269]	2-19/32 "	R42R55314	R42R55314[37]	R40107771	R4090100P[72]	-	-	R4577512	R4577512
R44141628[269]	2-19/32 "	R42R55314	R42R55314[37]	R40107771	R4090100P[72]	-	-	R458634[52]	R458634
23-123552-004[266]	2-7/8 "	R42R55250	R42R55250[37]	R4066365	R4090096[72]	-	-	R4577512	R4577512
23-123572-004[271]	2-7/8 "	R42R55250	R42R55250[37]	R4066365	R4090096[72]	-	-	R458634[52]	R458634
23-122701-002[269]	2-7/8 "	R42R55250	R42R55250[37]	R4066365	R4090096[72]	N/A[53]	-	-	-
23-122527-002[272]	2-19/32 "	R42R55314	R42R55314[37]	R40107771	R4090100P[72]	N/A[53]	-	-	-
23-122527-002[272]	2-7/8 "	R42R55250	R42R55250[37]	R4066365	R4090096[72]	-	-	-	-
23-123572-004[271]	3-3/8 "	R42R55099	R42R55098[37]	R4066780	R4090021[201]	N/A[53]	-	-	-
23-122920-002[273]	2-19/32 "	R42R55314	R42R55314[37]	R40107771	R4090100P[72]	N/A[53]	-	-	-

270 - 5 Stud, U Shape, .766 Dia. Studs
271 - 6 Stud, Hat Shape
272 - 6 Stud, U Shape
273 - 5 Stud, U Shape, .780 Dia. Studs
275 - 5 Stud, U Shape, .656 Dia. Studs

MAKE MODEL YEAR AXLE CODE AXLE WEIGHT	AXLE & BRK. TYPE	BRK. MFG.	BRAKE SIZE	FMSI	MERITOR DISC PAD OR BRAKE SHOE	MERITOR GUIDE PIN OR RETURN SPRING KIT	MERITOR CALIPER HWD. KIT OR RETURN SPRING KIT	MERITOR ADJUSTER KIT (LEFT WHEEL)	MERITOR ADJUSTER KIT (RIGHT WHEEL)
ITE(Cont.)									
160, 1600, 1650 SERIES(Cont.)									
1985									
	Fd	BX		7142 - D225	MD225	R40H5010	R40H5522	NR	NR
	Fd	BX		7142 - D225	MD225	R40H5010	R40H5522	NR	NR
	Fd	BX		7142 - D225	MD225	R40H5010	R40H5522	NR	NR
	Fd	BX		7108 - D184	MD184	R40H5010	R40H5519	NR	NR
	Fd	BX		7108 - D184	MD184	R40H5010	R40H5519	NR	NR
	Fd	BX		7142 - D225	MD225	R40H5010	R40H5522	NR	NR
	Fd	BX		7108 - D184	MD184	R40H5010	R40H5519	NR	NR
	Fd	BX		7108 - D184	MD184	R40H5010	R40H5519	NR	NR
	Fd	BX		7108 - D184	MD184	R40H5010	R40H5519	NR	NR
	Fd	BX		7108 - D184	MD184	R40H5010	R40H5519	NR	NR
	Fd	BX		7108 - D184	MD184	R40H5010	R40H5519	NR	NR
	Fd	BX		7142 - D225	MD225	R40H5010	R40H5522	NR	NR
	Fd	BX		7108 - D184	MD184	R40H5010	R40H5519	NR	NR
	Fd	BX		7108 - D184	MD184	R40H5010	R40H5519	NR	NR
	Fd	BX		7108 - D184	MD184	R40H5010	R40H5519	NR	NR
	Fd	BX		7142 - D225	MD225	R40H5010	R40H5522	NR	NR
	Fd	BX		7108 - D184	MD184	R40H5010	R40H5519	NR	NR
	Fd	BX		7108 - D184	MD184	R40H5010	R40H5519	NR	NR
	Fd	BX		7142 - D225	MD225	R40H5010	R40H5522	NR	NR
	Fd	BX		7108 - D184	MD184	R40H5010	R40H5519	NR	NR
	Fd	BX		7108 - D184	MD184	R40H5010	R40H5519	NR	NR
	Fd	BX		7108 - D184	MD184	R40H5010	R40H5519	NR	NR
	Fd	BX		7108 - D184	MD184	R40H5010	R40H5519	NR	NR
	Fd	BX		7108 - D184	MD184	R40H5010	R40H5519	NR	NR
	Fd	BX		7142 - D225	MD225	R40H5010	R40H5522	NR	NR
	Fd	BX		7142 - D225	MD225	R40H5010	R40H5522	NR	NR
	Fd	BX		7108 - D184	MD184	R40H5010	R40H5519	NR	NR
	Fd	BX		7142 - D225	MD225	R40H5010	R40H5522	NR	NR
	Fd	BX		7108 - D184	MD184	R40H5010	R40H5519	NR	NR
	Fd	BX		7142 - D225	MD225	R40H5010	R40H5522	NR	NR
	Fd	BX		7108 - D184	MD184	R40H5010	R40H5519	NR	NR
	Fd	BX		7108 - D184	MD184	R40H5010	R40H5519	NR	NR
	Fd	BX		7108 - D184	MD184	R40H5010	R40H5519	NR	NR
	Fd	BX		7142 - D225	MD225	R40H5010	R40H5522	NR	NR
	Rd	BX		7142 - D225	MD225	R40H5010	R40H5522	NR	NR
	Rd	BX		7142 - D225	MD225	R40H5010	R40H5522	NR	NR
	Rd	BX		7108 - D184	MD184	R40H5010	R40H5519	NR	NR
	Rd	BX		7142 - D225	MD225	R40H5010	R40H5522	NR	NR
	Rd	BX		7108 - D184	MD184	R40H5010	R40H5519	NR	NR
	Rd	BX		7108 - D184	MD184	R40H5010	R40H5519	NR	NR
	Rd	BX		7142 - D225	MD225	R40H5010	R40H5522	NR	NR
	Rd	BX		7108 - D184	MD184	R40H5010	R40H5519	NR	NR
	Rd	BX		7108 - D184	MD184	R40H5010	R40H5519	NR	NR
	Rd	BX		7142 - D225	MD225	R40H5010	R40H5522	NR	NR
	Rd	BX		7142 - D225	MD225	R40H5010	R40H5522	NR	NR
	Rd	BX		7108 - D184	MD184	R40H5010	R40H5519	NR	NR
1984 C1610, C1650 Cargostar Tilt Cab	Fd	BX		7108 - D184	MD184	R40H5010	R40H5519	NR	NR
	Fd	BX		7142 - D225	MD225	R40H5010	R40H5522	NR	NR
	Rd	BX		7142 - D225	MD225	R40H5010	R40H5522	NR	NR
S1600, S1652, S1654 Conventional	Fd	BX		7108 - D184	MD184	R40H5010	R40H5519	NR	NR
	Fd	BX		7142 - D225	MD225	R40H5010	R40H5522	NR	NR
	Fd	BX		7142 - D225	MD225	R40H5010	R40H5522	NR	NR
	Fd	BX		7142 - D225	MD225	R40H5010	R40H5522	NR	NR
	Fd	BX		7108 - D184	MD184	R40H5010	R40H5519	NR	NR
	Fd	BX		7108 - D184	MD184	R40H5010	R40H5519	NR	NR

37 - Also available as a New unit
72 - Phenolic/Steel Face
267 - 10 Stud, U Shaped
52 - 18" Length
201 - Steel Piston
268 - 5 Stud, Hat Shape
53 - Power Brakes
266 - 10 Stud, Hat Shaped
269 - 5 Stud, U Shape

MERITOR DRUM OR ROTOR NO.	CALIPER OR CYLINDER BORE SIZE	MERITOR CALIPER OR WHEEL CYLINDER (LEFT)	MERITOR CALIPER OR WHEEL CYLINDER (RIGHT)	MERITOR CALIPER OR WHEEL CYLINDER REPAIR KIT	MERITOR CALIPER PISTON	MERITOR MASTER CYLINDER	MERITOR MASTER CYLINDER KIT	MERITOR BRAKE HOSE (LEFT)	MERITOR BRAKE HOSE (RIGHT)
									ITE(Cont.)
									160, 1600, 1650 SERIES(Cont.)
23-122527-002[272]	2-7/8 "	R42R55250	R42R55250[37]	R4066365	R4090096[72]	N/A[53]	-	-	-
23-123572-004[271]	2-7/8 "	R42R55250	R42R55250[37]	R4066365	R4090096[72]	N/A[53]	-	-	-
23-123552-004[266]	2-7/8 "	R42R55250	R42R55250[37]	R4066365	R4090096[72]	N/A[53]	-	-	-
23-122527-002[272]	2-19/32 "	R42R55314	R42R55314[37]	R40107771	R4090100P[72]	N/A[53]	-	-	-
R44141476[268]	2-19/32 "	R42R55314	R42R55314[37]	R40107771	R4090100P[72]	N/A[53]	-	-	-
23-122920-002[273]	2-7/8 "	R42R55250	R42R55250[37]	R4066365	R4090096[72]	N/A[53]	-	-	-
23-123552-004[266]	3-3/8 "	R42R55099	R42R55098[37]	R4066780	R4090021[201]	N/A[53]	-	-	-
R44141858[275]	2-19/32 "	R42R55314	R42R55314[37]	R40107771	R4090100P[72]	N/A[53]	-	R458632	R458632
23-122527-002[272]	2-19/32 "	R42R55314	R42R55314[37]	R40107771	R4090100P[72]	N/A[53]	-	R458632	R458632
R44141476[268]	3-3/8 "	R42R55099	R42R55098[37]	R4066780	R4090021[201]	N/A[53]	-	-	-
23-122920-002[273]	2-19/32 "	R42R55314	R42R55314[37]	R40107771	R4090100P[72]	N/A[53]	-	R458632	R458632
23-123572-004[271]	2-7/8 "	R42R55250	R42R55250[37]	R4066365	R4090096[72]	N/A[53]	-	R458632	R458632
23-123552-004[266]	2-19/32 "	R42R55314	R42R55314[37]	R40107771	R4090100P[72]	N/A[53]	-	-	-
23-122701-002[269]	3-3/8 "	R42R55099	R42R55098[37]	R4066780	R4090021[201]	N/A[53]	-	-	-
R44141858[275]	3-3/8 "	R42R55099	R42R55098[37]	R4066780	R4090021[201]	N/A[53]	-	-	-
23-122920-002[273]	2-7/8 "	R42R55250	R42R55250[37]	R4066365	R4090096[72]	N/A[53]	-	R458632	R458632
R44141476[268]	3-3/8 "	R42R55099	R42R55098[37]	R4066780	R4090021[201]	N/A[53]	-	R458632	R458632
R44141476[268]	2-19/32 "	R42R55314	R42R55314[37]	R40107771	R4090100P[72]	N/A[53]	-	R458632	R458632
23-122527-002[272]	2-7/8 "	R42R55250	R42R55250[37]	R4066365	R4090096[72]	N/A[53]	-	R458632	R458632
23-122920-002[273]	3-3/8 "	R42R55099	R42R55098[37]	R4066780	R4090021[201]	N/A[53]	-	R458632	R458632
23-123552-004[266]	3-3/8 "	R42R55099	R42R55098[37]	R4066780	R4090021[201]	N/A[53]	-	R458632	R458632
23-122701-002[269]	2-19/32 "	R42R55314	R42R55314[37]	R40107771	R4090100P[72]	N/A[53]	-	-	-
23-122527-002[272]	3-3/8 "	R42R55099	R42R55098[37]	R4066780	R4090021[201]	N/A[53]	-	-	-
23-122701-002[269]	2-19/32 "	R42R55314	R42R55314[37]	R40107771	R4090100P[72]	N/A[53]	-	R458632	R458632
23-122527-002[272]	3-3/8 "	R42R55099	R42R55098[37]	R4066780	R4090021[201]	N/A[53]	-	R458632	R458632
23-123552-004[266]	2-7/8 "	R42R55250	R42R55250[37]	R4066365	R4090096[72]	N/A[53]	-	R458632	R458632
23-122701-002[269]	2-7/8 "	R42R55250	R42R55250[37]	R4066365	R4090096[72]	N/A[53]	-	R458632	R458632
23-123572-004[271]	3-3/8 "	R42R55099	R42R55098[37]	R4066780	R4090021[201]	N/A[53]	-	R458632	R458632
R44141858[275]	2-7/8 "	R42R55250	R42R55250[37]	R4066365	R4090096[72]	N/A[53]	-	R458632	R458632
23-123572-004[271]	2-19/32 "	R42R55314	R42R55314[37]	R40107771	R4090100P[72]	N/A[53]	-	R458632	R458632
23-122701-002[269]	2-7/8 "	R42R55250	R42R55250[37]	R4066365	R4090096[72]	N/A[53]	-	-	-
23-123572-004[271]	2-19/32 "	R42R55314	R42R55314[37]	R40107771	R4090100P[72]	N/A[53]	-	-	-
R44141858[275]	3-3/8 "	R42R55099	R42R55098[37]	R4066780	R4090021[201]	N/A[53]	-	R458632	R458632
23-122701-002[269]	3-3/8 "	R42R55099	R42R55098[37]	R4066780	R4090021[201]	N/A[53]	-	R458632	R458632
R44141858[275]	2-7/8 "	R42R55250	R42R55250[37]	R4066365	R4090096[72]	N/A[53]	-	-	-
R44141476[268]	2-7/8 "	R42R55250	R42R55250[37]	R4066365	R4090096[72]	N/A[53]	-	R458632	R458632
R44141858[275]	2-19/32 "	R42R55314	R42R55314[37]	R40107771	R4090100P[72]	N/A[53]	-	-	-
23-122920-002[273]	3-3/8 "	R42R55099	R42R55098[37]	R4066780	R4090021[201]	N/A[53]	-	-	-
23-123552-004[266]	2-19/32 "	R42R55314	R42R55314[37]	R40107771	R4090100P[72]	N/A[53]	-	R458632	R458632
R44141476[268]	2-7/8 "	R42R55250	R42R55250[37]	R4066365	R4090096[72]	N/A[53]	-	-	-
R44141627[270]	2-7/8 "	R42R55250	R42R55250[37]	R4066365	R4090096[72]	-	-	R458634[52]	R458634
R44141628[269]	2-7/8 "	R42R55250	R42R55250[37]	R4066365	R4090096[72]	-	-	R458634[52]	R458634
R44141629[269]	2-19/32 "	R42R55314	R42R55314[37]	R40107771	R4090100P[72]	-	-	R458634[52]	R458634
23-123572-004[271]	2-7/8 "	R42R55250	R42R55250[37]	R4066365	R4090096[72]	-	-	R458634[52]	R458634
23-123572-004[271]	2-19/32 "	R42R55314	R42R55314[37]	R40107771	R4090100P[72]	-	-	R458634[52]	R458634
23-123552-004[266]	2-19/32 "	R42R55314	R42R55314[37]	R40107771	R4090100P[72]	-	-	R458634[52]	R458634
23-123552-004[266]	2-7/8 "	R42R55250	R42R55250[37]	R4066365	R4090096[72]	-	-	R458634[52]	R458634
R44141608[267]	2-19/32 "	R42R55314	R42R55314[37]	R40107771	R4090100P[72]	-	-	R458634[52]	R458634
R44141627[270]	2-19/32 "	R42R55314	R42R55314[37]	R40107771	R4090100P[72]	-	-	R458634[52]	R458634
R44141629[269]	2-7/8 "	R42R55250	R42R55250[37]	R4066365	R4090096[72]	-	-	R458634[52]	R458634
R44141608[267]	2-7/8 "	R42R55250	R42R55250[37]	R4066365	R4090096[72]	-	-	R458634[52]	R458634
R44141628[269]	2-19/32 "	R42R55314	R42R55314[37]	R40107771	R4090100P[72]	-	-	R458634[52]	R458634
23-122527-002[272]	2-19/32 "	R42R55314	R42R55314[37]	R40107771	R4090100P[72]	N/A[53]	-	-	-
23-122701-002[269]	2-7/8 "	R42R55250	R42R55250[37]	R4066365	R4090096[72]	N/A[53]	-	-	-
23-122527-002[272]	2-7/8 "	R42R55250	R42R55250[37]	R4066365	R4090096[72]	-	-	-	-
23-122920-002[273]	2-19/32 "	R42R55314	R42R55314[37]	R40107771	R4090100P[72]	N/A[53]	-	R458632	R458632
R44141858[275]	2-7/8 "	R42R55250	R42R55250[37]	R4066365	R4090096[72]	N/A[53]	-	R4577503	R4577503
23-122920-002[273]	2-7/8 "	R42R55250	R42R55250[37]	R4066365	R4090096[72]	N/A[53]	-	R4577503	R4577503
R44141858[275]	2-7/8 "	R42R55250	R42R55250[37]	R4066365	R4090096[72]	N/A[53]	-	R458632	R458632
R44141476[268]	3-3/8 "	R42R55099	R42R55098[37]	R4066780	R4090021[201]	N/A[53]	-	R4577503	R4577503
23-122527-002[272]	2-19/32 "	R42R55314	R42R55314[37]	R40107771	R4090100P[72]	N/A[53]	-	R458632	R458632

270 - 5 Stud, U Shape, .766 Dia. Studs
271 - 6 Stud, Hat Shape
272 - 6 Stud, U Shape
273 - 5 Stud, U Shape, .780 Dia. Studs
275 - 5 Stud, U Shape, .656 Dia. Studs

MAKE MODEL YEAR AXLE CODE AXLE WEIGHT	AXLE & BRK. TYPE	BRK. MFG.	BRAKE SIZE	FMSI	MERITOR DISC PAD OR BRAKE SHOE	MERITOR GUIDE PIN OR RETURN SPRING KIT	MERITOR CALIPER HWD. KIT OR RETURN SPRING KIT	MERITOR ADJUSTER KIT (LEFT WHEEL)	MERITOR ADJUSTER KIT (RIGHT WHEEL)
ITE(Cont.)									
160, 1600, 1650 SERIES(Cont.)									
1984									
	Fd	BX		7108 - D184	MD184	R40H5010	R40H5519	NR	NR
	Fd	BX		7142 - D225	MD225	R40H5010	R40H5522	NR	NR
	Fd	BX		7108 - D184	MD184	R40H5010	R40H5519	NR	NR
	Fd	BX		7142 - D225	MD225	R40H5010	R40H5522	NR	NR
	Fd	BX		7142 - D225	MD225	R40H5010	R40H5522	NR	NR
	Fd	BX		7142 - D225	MD225	R40H5010	R40H5522	NR	NR
	Fd	BX		7108 - D184	MD184	R40H5010	R40H5519	NR	NR
	Fd	BX		7108 - D184	MD184	R40H5010	R40H5519	NR	NR
	Fd	BX		7108 - D184	MD184	R40H5010	R40H5519	NR	NR
	Fd	BX		7108 - D184	MD184	R40H5010	R40H5519	NR	NR
	Fd	BX		7142 - D225	MD225	R40H5010	R40H5522	NR	NR
	Fd	BX		7108 - D184	MD184	R40H5010	R40H5519	NR	NR
	Fd	BX		7108 - D184	MD184	R40H5010	R40H5519	NR	NR
	Fd	BX		7142 - D225	MD225	R40H5010	R40H5522	NR	NR
	Fd	BX		7108 - D184	MD184	R40H5010	R40H5519	NR	NR
	Fd	BX		7108 - D184	MD184	R40H5010	R40H5519	NR	NR
	Fd	BX		7108 - D184	MD184	R40H5010	R40H5519	NR	NR
	Fd	BX		7108 - D184	MD184	R40H5010	R40H5519	NR	NR
	Fd	BX		7142 - D225	MD225	R40H5010	R40H5522	NR	NR
	Fd	BX		7108 - D184	MD184	R40H5010	R40H5519	NR	NR
	Fd	BX		7108 - D184	MD184	R40H5010	R40H5519	NR	NR
	Fd	BX		7108 - D184	MD184	R40H5010	R40H5519	NR	NR
	Fd	BX		7142 - D225	MD225	R40H5010	R40H5522	NR	NR
	Fd	BX		7108 - D184	MD184	R40H5010	R40H5519	NR	NR
	Fd	BX		7108 - D184	MD184	R40H5010	R40H5519	NR	NR
	Fd	BX		7142 - D225	MD225	R40H5010	R40H5522	NR	NR
	Fd	BX		7108 - D184	MD184	R40H5010	R40H5519	NR	NR
	Fd	BX		7108 - D184	MD184	R40H5010	R40H5519	NR	NR
	Fd	BX		7108 - D184	MD184	R40H5010	R40H5519	NR	NR
	Fd	BX		7108 - D184	MD184	R40H5010	R40H5519	NR	NR
	Fd	BX		7108 - D184	MD184	R40H5010	R40H5519	NR	NR
	Fd	BX		7108 - D184	MD184	R40H5010	R40H5519	NR	NR
	Fd	BX		7142 - D225	MD225	R40H5010	R40H5522	NR	NR
	Fd	BX		7108 - D184	MD184	R40H5010	R40H5519	NR	NR
	Fd	BX		7142 - D225	MD225	R40H5010	R40H5522	NR	NR
	Fd	BX		7108 - D184	MD184	R40H5010	R40H5519	NR	NR
	Rd	BX		7142 - D225	MD225	R40H5010	R40H5522	NR	NR
	Rd	BX		7108 - D184	MD184	R40H5010	R40H5519	NR	NR
	Rd	BX		7108 - D184	MD184	R40H5010	R40H5519	NR	NR
	Rd	BX		7108 - D184	MD184	R40H5010	R40H5519	NR	NR
	Rd	BX		7142 - D225	MD225	R40H5010	R40H5522	NR	NR
	Rd	BX		7142 - D225	MD225	R40H5010	R40H5522	NR	NR
	Rd	BX		7142 - D225	MD225	R40H5010	R40H5522	NR	NR
	Rd	BX		7142 - D225	MD225	R40H5010	R40H5522	NR	NR
	Rd	BX		7108 - D184	MD184	R40H5010	R40H5519	NR	NR
	Rd	BX		7108 - D184	MD184	R40H5010	R40H5519	NR	NR
	Rd	BX		7108 - D184	MD184	R40H5010	R40H5519	NR	NR
	Rd	BX		7142 - D225	MD225	R40H5010	R40H5522	NR	NR
1983 M1600, M1652, M1654 Metro Series, Forward Control	Fd	BX		7108 - D184	MD184	R40H5010	R40H5519	NR	NR
M1600, M1652, M1654 Metro Series, Forward Control									
FA101	Fd	BX		7108 - D184	MD184	R40H5010	R40H5519	NR	NR
	Fd	BX		7108 - D184	MD184	R40H5010	R40H5519	NR	NR
	Fd	BX		7108 - D184	MD184	R40H5010	R40H5519	NR	NR
	Fd	BX		7108 - D184	MD184	R40H5010	R40H5519	NR	NR
	Fd	BX		7108 - D184	MD184	R40H5010	R40H5519	NR	NR
	Fd	BX		7108 - D184	MD184	R40H5010	R40H5519	NR	NR
M1600, M1652, M1654 Metro Series, Forward Control									
FA209	Fa	WG	15 " x 3 "	1245C - 321	R700321	R40H521	R40H9237	R40H3502	R40H3503

37 - Also available as a New unit

38 - First design, may have external joining tube and uses steel pistons

52 - 18" Length

53 - Power Brakes

72 - Phenolic/Steel Face

201 - Steel Piston

266 - 10 Stud, Hat Shaped

267 - 10 Stud, U Shaped

268 - 5 Stud, Hat Shape

MERITOR DRUM OR ROTOR NO.	CALIPER OR CYLINDER BORE SIZE	MERITOR CALIPER OR WHEEL CYLINDER (LEFT)	MERITOR CALIPER OR WHEEL CYLINDER (RIGHT)	MERITOR CALIPER OR WHEEL CYLINDER REPAIR KIT	MERITOR CALIPER PISTON	MERITOR MASTER CYLINDER	MERITOR MASTER CYLINDER KIT	MERITOR BRAKE HOSE (LEFT)	MERITOR BRAKE HOSE (RIGHT)
									ITE(Cont.)
									160, 1600, 1650 SERIES(Cont.)
R44141476[268]	3-3/8 "	R42R55099	R42R55098[37]	R4066780	R4090021[201]	N/A[53]	-	R458632	R458632
23-122920-002[273]	2-7/8 "	R42R55250	R42R55250[37]	R4066365	R4090096[72]	N/A[53]	-	R458632	R458632
23-123572-004[271]	2-19/32 "	R42R55314	R42R55314[37]	R40107771	R4090100P[72]	N/A[53]	-	R4577503	R4577503
23-122527-002[272]	2-7/8 "	R42R55250	R42R55250[37]	R4066365	R4090096[72]	N/A[53]	-	R458632	R458632
23-122701-002[269]	2-7/8 "	R42R55250	R42R55250[37]	R4066365	R4090096[72]	N/A[53]	-	R4577503	R4577503
23-122701-002[269]	2-7/8 "	R42R55250	R42R55250[37]	R4066365	R4090096[72]	N/A[53]	-	R458632	R458632
23-123572-004[271]	3-3/8 "	R42R55099	R42R55098[37]	R4066780	R4090021[201]	N/A[53]	-	R458632	R458632
R44141858[275]	2-19/32 "	R42R55314	R42R55314[37]	R40107771	R4090100P[72]	N/A[53]	-	R4577503	R4577503
R44141476[268]	2-19/32 "	R42R55314	R42R55314[37]	R40107771	R4090100P[72]	N/A[53]	-	R458632	R458632
R44141858[275]	3-3/8 "	R42R55099	R42R55098[37]	R4066780	R4090021[201]	N/A[53]	-	R4577503	R4577503
23-123572-004[271]	2-7/8 "	R42R55250	R42R55250[37]	R4066365	R4090096[72]	N/A[53]	-	R4577503	R4577503
23-123552-004[266]	2-19/32 "	R42R55314	R42R55314[37]	R40107771	R4090100P[72]	N/A[53]	-	R4577503	R4577503
R44141476[268]	2-19/32 "	R42R55314	R42R55314[37]	R40107771	R4090100P[72]	N/A[53]	-	R4577503	R4577503
23-122527-002[272]	2-7/8 "	R42R55250	R42R55250[37]	R4066365	R4090096[72]	N/A[53]	-	R4577503	R4577503
23-122527-002[272]	2-19/32 "	R42R55314	R42R55314[37]	R40107771	R4090100P[72]	N/A[53]	-	R4577503	R4577503
R44141858[275]	3-3/8 "	R42R55099	R42R55098[37]	R4066780	R4090021[201]	N/A[53]	-	R458632	R458632
23-123552-004[266]	3-3/8 "	R42R55099	R42R55098[37]	R4066780	R4090021[201]	N/A[53]	-	R4577503	R4577503
23-123572-004[271]	2-19/32 "	R42R55314	R42R55314[37]	R40107771	R4090100P[72]	N/A[53]	-	R458632	R458632
23-123572-004[271]	2-7/8 "	R42R55250	R42R55250[37]	R4066365	R4090096[72]	N/A[53]	-	R458632	R458632
23-122527-002[272]	3-3/8 "	R42R55099	R42R55098[37]	R4066780	R4090021[201]	N/A[53]	-	R458632	R458632
23-122701-002[269]	3-3/8 "	R42R55099	R42R55098[37]	R4066780	R4090021[201]	N/A[53]	-	R4577503	R4577503
R44141476[268]	2-7/8 "	R42R55250	R42R55250[37]	R4066365	R4090096[72]	N/A[53]	-	R4577503	R4577503
23-123552-004[266]	2-19/32 "	R42R55314	R42R55314[37]	R40107771	R4090100P[72]	N/A[53]	-	R458632	R458632
23-122527-002[272]	3-3/8 "	R42R55099	R42R55098[37]	R4066780	R4090021[201]	N/A[53]	-	R4577503	R4577503
23-123552-004[266]	2-7/8 "	R42R55250	R42R55250[37]	R4066365	R4090096[72]	N/A[53]	-	R458632	R458632
23-123552-004[266]	3-3/8 "	R42R55099	R42R55098[37]	R4066780	R4090021[201]	N/A[53]	-	R458632	R458632
23-122920-002[273]	3-3/8 "	R42R55099	R42R55098[37]	R4066780	R4090021[201]	N/A[53]	-	R4577503	R4577503
23-122701-002[269]	2-19/32 "	R42R55314	R42R55314[37]	R40107771	R4090100P[72]	N/A[53]	-	R4577503	R4577503
23-122920-002[273]	3-3/8 "	R42R55099	R42R55098[37]	R4066780	R4090021[201]	N/A[53]	-	R458632	R458632
23-123572-004[271]	3-3/8 "	R42R55099	R42R55098[37]	R4066780	R4090021[201]	N/A[53]	-	R4577503	R4577503
23-122920-002[273]	2-19/32 "	R42R55314	R42R55314[37]	R40107771	R4090100P[72]	N/A[53]	-	R4577503	R4577503
23-122701-002[269]	3-3/8 "	R42R55099	R42R55098[37]	R4066780	R4090021[201]	N/A[53]	-	R458632	R458632
R44141476[268]	2-7/8 "	R42R55250	R42R55250[37]	R4066365	R4090096[72]	N/A[53]	-	R458632	R458632
R44141858[275]	2-19/32 "	R42R55314	R42R55314[37]	R40107771	R4090100P[72]	N/A[53]	-	R458632	R458632
23-123552-004[266]	2-7/8 "	R42R55250	R42R55250[37]	R4066365	R4090096[72]	N/A[53]	-	R4577503	R4577503
23-122701-002[269]	2-19/32 "	R42R55314	R42R55314[37]	R40107771	R4090100P[72]	N/A[53]	-	R458632	R458632
R44141627[270]	2-7/8 "	R42R55250	R42R55250[37]	R4066365	R4090096[72]	-	-	R458634[52]	R458634
R44141627[270]	2-19/32 "	R42R55314	R42R55314[37]	R40107771	R4090100P[72]	-	-	R458634[52]	R458634
R44141629[269]	2-19/32 "	R42R55314	R42R55314[37]	R40107771	R4090100P[72]	-	-	R458634[52]	R458634
R44141628[269]	2-19/32 "	R42R55314	R42R55314[37]	R40107771	R4090100P[72]	-	-	R458634[52]	R458634
R44141628[269]	2-7/8 "	R42R55250	R42R55250[37]	R4066365	R4090096[72]	-	-	R458634[52]	R458634
23-123572-004[271]	2-7/8 "	R42R55250	R42R55250[37]	R4066365	R4090096[72]	-	-	R458634[52]	R458634
R44141629[269]	2-7/8 "	R42R55250	R42R55250[37]	R4066365	R4090096[72]	-	-	R458634[52]	R458634
23-123552-004[266]	2-7/8 "	R42R55250	R42R55250[37]	R4066365	R4090096[72]	-	-	R458634[52]	R458634
23-123572-004[271]	2-19/32 "	R42R55314	R42R55314[37]	R40107771	R4090100P[72]	-	-	R458634[52]	R458634
23-123552-004[266]	2-19/32 "	R42R55314	R42R55314[37]	R40107771	R4090100P[72]	-	-	R458634[52]	R458634
R44141608[267]	2-19/32 "	R42R55314	R42R55314[37]	R40107771	R4090100P[72]	-	-	R458634[52]	R458634
R44141608[267]	2-7/8 "	R42R55250	R42R55250[37]	R4066365	R4090096[72]	-	-	R458634[52]	R458634
23-122527-002[272]	3-3/8 "	R42R55099	R42R55098[37]	R4066780	R4090021[201]	-	-	-	-
23-122527-002[272]	2-19/32 "	R42R55245	R42R55245[38]	R402235118	R402238231[201]	-	-	-	-
23-122701-002[269]	2-19/32 "	R42R55245	R42R55245[38]	R402235118	R402238231[201]	-	-	-	-
23-123572-004[271]	2-19/32 "	R42R55245	R42R55245[38]	R402235118	R402238231[201]	-	-	-	-
23-123552-004[266]	2-19/32 "	R42R55245	R42R55245[38]	R402235118	R402238231[201]	-	-	-	-
23-122920-002[273]	2-19/32 "	R42R55245	R42R55245[38]	R402235118	R402238231[201]	-	-	-	-
R44141476[268]	2-19/32 "	R42R55245	R42R55245[38]	R402235118	R402238231[201]	-	-	-	-
N/A	1-1/4 "	R4133581	R4133582	R4166923	NR	-	-	-	-

269 - 5 Stud, U Shape

270 - 5 Stud, U Shape, .766 Dia. Studs

271 - 6 Stud, Hat Shape

272 - 6 Stud, U Shape

273 - 5 Stud, U Shape, .780 Dia. Studs

275 - 5 Stud, U Shape, .656 Dia. Studs

MAKE MODEL YEAR AXLE CODE AXLE WEIGHT	AXLE & BRK. TYPE	BRK. MFG.	BRAKE SIZE	FMSI	MERITOR DISC PAD OR BRAKE SHOE	MERITOR GUIDE PIN OR RETURN SPRING KIT	MERITOR CALIPER HWD. KIT OR RETURN SPRING KIT	MERITOR ADJUSTER KIT (LEFT WHEEL)	MERITOR ADJUSTER KIT (RIGHT WHEEL)
ITE(Cont.)									
160, 1600, 1650 SERIES(Cont.)									
1983									
	Fm	WG	15 " x 3 "	1245A - 235	R700235	R40H521	R40H9201	R40H3524	R40H3524
M1600, M1652, M1654 Metro Series, Forward Control									
FA309	Fd	BX		7142 - D225	MD225	R40H5010	R40H5522	NR	NR
	Fd	BX		7142 - D225	MD225	R40H5010	R40H5522	NR	NR
	Fd	BX		7142 - D225	MD225	R40H5010	R40H5522	NR	NR
	Fd	BX		7142 - D225	MD225	R40H5010	R40H5522	NR	NR
	Fd	BX		7142 - D225	MD225	R40H5010	R40H5522	NR	NR
	Fd	BX		7142 - D225	MD225	R40H5010	R40H5522	NR	NR
M1600, M1652, M1654 Metro Series, Forward Control									
FA69	Fa	WG	14 " x 2-1/2 "	1294A - 325	N/A	R40H521	R40H9237	R40H3502	R40H3503
	Fm	WG	14 " x 2-1/2 "	1294 - 296	N/A	R40H521	R40H9201	R40H3524	R40H3524
M1600, M1652, M1654 Metro Series, Forward Control									
FA71, 73, 101	Fd	BX		7108 - D184	MD184	R40H5010	R40H5519	NR	NR
	Fd	BX		7108 - D184	MD184	R40H5010	R40H5519	NR	NR
	Fd	BX		7108 - D184	MD184	R40H5010	R40H5519	NR	NR
	Fd	BX		7108 - D184	MD184	R40H5010	R40H5519	NR	NR
	Fd	BX		7108 - D184	MD184	R40H5010	R40H5519	NR	NR
M1600, M1652, M1654 Metro Series, Forward Control									
FA73, 101	Fa	WG	15 " x 3-1/2 "	1280B - 322	R464004	R40H521	R40H9237	R40H3502	R40H3503
	Fm	WG	15 " x 3-1/2 "	1280 - 463	R700463	R40H521	R40H9201	R40H3524	R40H3524
M1600, M1652, M1654 Metro Series, Forward Control									
FA73, 101, 109	Fa	WG	15 " x 3 "	1245C - 321	R700321	R40H521	R40H9237	R40H3502	R40H3503
	Fm	WG	15 " x 3 "	1245A - 235	R700235	R40H521	R40H9201	R40H3524	R40H3524
M1600, M1652, M1654 Metro Series, Forward Control									
FA74	Fa	WG	15 " x 3 "	1245C - 321	R700321	R40H521	R40H9237	R40H3502	R40H3503
	Fm	WG	15 " x 3 "	1245A - 235	R700235	R40H521	R40H9201	R40H3524	R40H3524
M1600, M1652, M1654 Metro Series, Forward Control									
FA78, 81	Fa	WG	15 " x 3 "	1245C - 321	R700321	R40H521	R40H9237	R40H3502	R40H3503
M1600, M1652, M1654 Metro Series, Forward Control									
FA99	Fa	WG	15 " x 3 "	1245C - 321	R700321	R40H521	R40H9237	R40H3502	R40H3503
	Fm	WG	15 " x 3 "	1245A - 235	R700235	R40H521	R40H9201	R40H3524	R40H3524
M1600, M1652, M1654 Metro Series, Forward Control									
RA25, 126, 184	Ra	WG	15 " x 4 "	4645A - 376	Discontinued	R40H597	R40H9200	R40H3540	R40H3541
	Ra	WG	15 " x 5 "	1252 - 346	R700346	R40H597	R40H9200	R40H3540	R40H3541
	Rm	WG	15 " x 4 "	4645A - 376	Discontinued	R40H597	R40H9200	R40H3518	R404148
	Rm	WG	15 " x 5 "	1252 - 346	R700346	R40H597	R40H9200	R40H3518	R404148
M1600, M1652, M1654 Metro Series, Forward Control									
RA29, 30, 39, 187	Rd	BX		7108 - D184	MD184	R40H5010	R40H5519	NR	NR
	Rd	BX		7108 - D184	MD184	R40H5010	R40H5519	NR	NR
	Rd	BX		7108 - D184	MD184	R40H5010	R40H5519	NR	NR
	Rd	BX		7108 - D184	MD184	R40H5010	R40H5519	NR	NR
	Rd	BX		7108 - D184	MD184	R40H5010	R40H5519	NR	NR
	Rd	BX		7108 - D184	MD184	R40H5010	R40H5519	NR	NR
	Rd	BX		7108 - D184	MD184	R40H5010	R40H5519	NR	NR

37 - Also available as a New unit

38 - First design, may have external joining tube and uses steel pistons

72 - Phenolic/Steel Face

201 - Steel Piston

266 - 10 Stud, Hat Shaped

267 - 10 Stud, U Shaped

268 - 5 Stud, Hat Shape

269 - 5 Stud, U Shape

270 - 5 Stud, U Shape, .766 Dia. Studs

MERITOR DRUM OR ROTOR NO.	CALIPER OR CYLINDER BORE SIZE	MERITOR CALIPER OR WHEEL CYLINDER (LEFT)	MERITOR CALIPER OR WHEEL CYLINDER (RIGHT)	MERITOR CALIPER OR WHEEL CYLINDER REPAIR KIT	MERITOR CALIPER PISTON	MERITOR MASTER CYLINDER	MERITOR MASTER CYLINDER KIT	MERITOR BRAKE HOSE (LEFT)	MERITOR BRAKE HOSE (RIGHT)
ITE(Cont.)									
160, 1600, 1650 SERIES(Cont.)									
N/A	1-1/4 "	R4133581	R4133582	R4166923	NR	-	-	-	-
23-123572-004[271]	2-7/8 "	R42R55250	R42R55250[37]	R4066365	R4090096[72]	-	-	-	-
R44141476[268]	2-7/8 "	R42R55250	R42R55250[37]	R4066365	R4090096[72]	-	-	-	-
23-122701-002[269]	2-7/8 "	R42R55250	R42R55250[37]	R4066365	R4090096[72]	-	-	-	-
23-122920-002[273]	2-7/8 "	R42R55250	R42R55250[37]	R4066365	R4090096[72]	-	-	-	-
23-122527-002[272]	2-7/8 "	R42R55250	R42R55250[37]	R4066365	R4090096[72]	-	-	-	-
23-123552-004[266]	2-7/8 "	R42R55250	R42R55250[37]	R4066365	R4090096[72]	-	-	-	-
N/A	1-1/8 "	R4133714	R4133715	R4166926	NR	-	-	-	-
N/A	1-1/8 "	R4133714	R4133715	R4166926	NR	-	-	-	-
23-123552-004[266]	3-3/8 "	R42R55099	R42R55098[37]	R4066780	R4090021[201]	-	-	-	-
R44141476[268]	3-3/8 "	R42R55099	R42R55098[37]	R4066780	R4090021[201]	-	-	-	-
23-122701-002[269]	3-3/8 "	R42R55099	R42R55098[37]	R4066780	R4090021[201]	-	-	-	-
23-123572-004[271]	3-3/8 "	R42R55099	R42R55098[37]	R4066780	R4090021[201]	-	-	-	-
23-122920-002[273]	3-3/8 "	R42R55099	R42R55098[37]	R4066780	R4090021[201]	-	-	-	-
N/A	1-1/4 "	R4133581	R4133582	R4166923	NR	-	-	-	-
N/A	1-1/4 "	R4133581	R4133582	R4166923	NR	-	-	-	-
N/A	1-1/4 "	R4133581	R4133582	R4166923	NR	-	-	-	-
N/A	1-1/8 "	R4133714	R4133715	R4166926	NR	-	-	-	-
N/A	1-1/4 "	R4133581	R4133582	R4166923	NR	-	-	-	-
N/A	1-1/4 "	R4133581	R4133582	R4166923	NR	-	-	-	-
N/A	1-1/8 "	R4133320	R4133321	R4166926	NR	-	-	-	-
N/A	1-1/4 "	R4133581	R4133582	R4166923	NR	-	-	-	-
N/A	1-1/4 "	R4133581	R4133582	R4166923	NR	-	-	-	-
N/A	1-1/2 "	R4133580	R4133580	Discontinued	NR	-	-	-	-
N/A	1-5/8 "	R4133338	R4133338	R4166689	NR	-	-	-	-
N/A	1-1/2 "	R4133580	R4133580	Discontinued	NR	-	-	-	-
N/A	1-5/8 "	R4133338	R4133338	R4166689	NR	-	-	-	-
R44141608[267]	2-19/32 "	R42R55245	R42R55245[38]	R402235118	R402238231[201]	-	-	-	-
R44141628[269]	2-19/32 "	R42R55245	R42R55245[38]	R402235118	R402238231[201]	-	-	-	-
23-122527-002[272]	2-19/32 "	R42R55245	R42R55245[38]	R402235118	R402238231[201]	-	-	-	-
R44141629[269]	2-19/32 "	R42R55245	R42R55245[38]	R402235118	R402238231[201]	-	-	-	-
23-123552-004[266]	2-19/32 "	R42R55245	R42R55245[38]	R402235118	R402238231[201]	-	-	-	-
23-123572-004[271]	2-19/32 "	R42R55245	R42R55245[38]	R402235118	R402238231[201]	-	-	-	-
R44141627[270]	2-19/32 "	R42R55245	R42R55245[38]	R402235118	R402238231[201]	-	-	-	-

271 - 6 Stud, Hat Shape

272 - 6 Stud, U Shape

273 - 5 Stud, U Shape, .780 Dia. Studs

MAKE MODEL YEAR AXLE CODE AXLE WEIGHT	AXLE & BRK. TYPE	BRK. MFG.	BRAKE SIZE	FMSI	MERITOR DISC PAD OR BRAKE SHOE	MERITOR GUIDE PIN OR RETURN SPRING KIT	MERITOR CALIPER HWD. KIT OR RETURN SPRING KIT	MERITOR ADJUSTER KIT (LEFT WHEEL)	MERITOR ADJUSTER KIT (RIGHT WHEEL)
ITE(Cont.)									
160, 1600, 1650 SERIES(Cont.)									
1983 M1600, M1652, M1654 Metro Series, Forward Control RA30, 39, 127, 187, 189	Ra	WG	15 " x 5 "	1252 - 346	R700346	R40H597	R40H9200	R40H3540	R40H3541
	Rm	WG	15 " x 5 "	1252 - 346	R700346	R40H597	R40H9200	R40H3518	R404148
M1600, M1652, M1654 Metro Series, Forward Control RA39	Ra	WG	15 " x 6 "	4596 - 381	R700381	R40H597	R40H9200	R40H3540	R40H3541
M1600, M1652, M1654 Metro Series, Forward Control RA39, 189	Ra	WG	16 " x 6 "	1255 - 386	N/A	R40H597	R40H9200	N/A	N/A
	Rm	WG	16 " x 6 "	1255 - 386	N/A	R40H597	R40H9200	R404149	R404150
M1600, M1652, M1654 Metro Series, Forward Control RA42, 44, 130, 186, 199	Rd	BX		7142 - D225	MD225	R40H5010	R40H5522	NR	NR
	Rd	BX		7142 - D225	MD225	R40H5010	R40H5522	NR	NR
	Rd	BX		7142 - D225	MD225	R40H5010	R40H5522	NR	NR
	Rd	BX		7142 - D225	MD225	R40H5010	R40H5522	NR	NR
	Rd	BX		7142 - D225	MD225	R40H5010	R40H5522	NR	NR
	Rd	BX		7142 - D225	MD225	R40H5010	R40H5522	NR	NR
	Rd	BX		7142 - D225	MD225	R40H5010	R40H5522	NR	NR
	Rd	BX		7142 - D225	MD225	R40H5010	R40H5522	NR	NR
	Rd	BX		7142 - D225	MD225	R40H5010	R40H5522	NR	NR
	Rd	BX		7142 - D225	MD225	R40H5010	R40H5522	NR	NR
	Rd	BX		7142 - D225	MD225	R40H5010	R40H5522	NR	NR
	Rd	BX		7142 - D225	MD225	R40H5010	R40H5522	NR	NR
	Rd	BX		7142 - D225	MD225	R40H5010	R40H5522	NR	NR
	Rd	BX		7142 - D225	MD225	R40H5010	R40H5522	NR	NR
M1600, M1652, M1654 Metro Series, Forward Control RA44	Ra	WG	15 " x 7 "	4597 - 383	R700383	R40H597	R40H9200	R40H3540	R40H3541
S1600, S1652, S1654 Conventional	Fd	BX		7108 - D184	MD184	R40H5010	R40H5519	NR	NR
	Fd	BX		7142 - D225	MD225	R40H5010	R40H5522	NR	NR
	Fd	BX		7142 - D225	MD225	R40H5010	R40H5522	NR	NR
	Fd	BX		7108 - D184	MD184	R40H5010	R40H5519	NR	NR
	Fd	BX		7108 - D184	MD184	R40H5010	R40H5519	NR	NR
	Fd	BX		7142 - D225	MD225	R40H5010	R40H5522	NR	NR
	Fd	BX		7108 - D184	MD184	R40H5010	R40H5519	NR	NR
	Fd	BX		7108 - D184	MD184	R40H5010	R40H5519	NR	NR
	Fd	BX		7108 - D184	MD184	R40H5010	R40H5519	NR	NR
	Fd	BX		7108 - D184	MD184	R40H5010	R40H5519	NR	NR
	Fd	BX		7108 - D184	MD184	R40H5010	R40H5519	NR	NR
	Fd	BX		7142 - D225	MD225	R40H5010	R40H5522	NR	NR
	Fd	BX		7108 - D184	MD184	R40H5010	R40H5519	NR	NR
	Fd	BX		7108 - D184	MD184	R40H5010	R40H5519	NR	NR
	Fd	BX		7108 - D184	MD184	R40H5010	R40H5519	NR	NR
	Fd	BX		7108 - D184	MD184	R40H5010	R40H5519	NR	NR
	Fd	BX		7142 - D225	MD225	R40H5010	R40H5522	NR	NR
	Fd	BX		7142 - D225	MD225	R40H5010	R40H5522	NR	NR
	Fd	BX		7142 - D225	MD225	R40H5010	R40H5522	NR	NR
	Fd	BX		7108 - D184	MD184	R40H5010	R40H5519	NR	NR
	Fd	BX		7108 - D184	MD184	R40H5010	R40H5519	NR	NR
	Fd	BX		7142 - D225	MD225	R40H5010	R40H5522	NR	NR
	Fd	BX		7108 - D184	MD184	R40H5010	R40H5519	NR	NR
	Fd	BX		7108 - D184	MD184	R40H5010	R40H5519	NR	NR
	Fd	BX		7108 - D184	MD184	R40H5010	R40H5519	NR	NR
	Fd	BX		7142 - D225	MD225	R40H5010	R40H5522	NR	NR
	Fd	BX		7108 - D184	MD184	R40H5010	R40H5519	NR	NR
	Fd	BX		7142 - D225	MD225	R40H5010	R40H5522	NR	NR

37 - Also available as a New unit
266 - 10 Stud, Hat Shaped
269 - 5 Stud, U Shape
72 - Phenolic/Steel Face
267 - 10 Stud, U Shaped
270 - 5 Stud, U Shape, .766 Dia. Studs
201 - Steel Piston
268 - 5 Stud, Hat Shape
271 - 6 Stud, Hat Shape

MERITOR DRUM OR ROTOR NO.	CALIPER OR CYLINDER BORE SIZE	MERITOR CALIPER OR WHEEL CYLINDER (LEFT)	MERITOR CALIPER OR WHEEL CYLINDER (RIGHT)	MERITOR CALIPER OR WHEEL CYLINDER REPAIR KIT	MERITOR CALIPER PISTON	MERITOR MASTER CYLINDER	MERITOR MASTER CYLINDER KIT	MERITOR BRAKE HOSE (LEFT)	MERITOR BRAKE HOSE (RIGHT)
									ITE(Cont.)
									160, 1600, 1650 SERIES(Cont.)
N/A	1-1/2 "	R4133580	R4133580	Discontinued	NR	-	-	-	-
N/A	1-1/2 "	R4133580	R4133580	Discontinued	NR	-	-	-	-
N/A	1-5/8 "	R4133338	R4133338	R4166689	NR	-	-	-	-
N/A	1-7/8 "	R4133584	R4133584	R4166897	NR	-	-	-	-
N/A	1-7/8 "	R4133584	R4133584	R4166897	NR	-	-	-	-
23-123552-004[266]	2-7/8 "	R42R55250	R42R55250[37]	R4066365	R4090096[72]	-	-	-	-
R44141627[270]	2-7/8 "	R42R55250	R42R55250[37]	R4066365	R4090096[72]	-	-	-	-
R44141628[269]	2-7/8 "	R42R55250	R42R55250[37]	R4066365	R4090096[72]	-	-	-	-
23-123552-004[266]	2-7/8 "	R42R55250	R42R55250[37]	R4066365	R4090096[72]	-	-	-	-
R44141608[267]	2-7/8 "	R42R55250	R42R55250[37]	R4066365	R4090096[72]	-	-	-	-
R44141628[269]	2-7/8 "	R42R55250	R42R55250[37]	R4066365	R4090096[72]	-	-	-	-
23-122527-002[272]	2-7/8 "	R42R55250	R42R55250[37]	R4066365	R4090096[72]	-	-	-	-
23-122527-002[272]	2-7/8 "	R42R55250	R42R55250[37]	R4066365	R4090096[72]	-	-	-	-
23-123572-004[271]	2-7/8 "	R42R55250	R42R55250[37]	R4066365	R4090096[72]	-	-	-	-
R44141629[269]	2-7/8 "	R42R55250	R42R55250[37]	R4066365	R4090096[72]	-	-	-	-
R44141627[270]	2-7/8 "	R42R55250	R42R55250[37]	R4066365	R4090096[72]	-	-	-	-
R44141629[269]	2-7/8 "	R42R55250	R42R55250[37]	R4066365	R4090096[72]	-	-	-	-
23-123572-004[271]	2-7/8 "	R42R55250	R42R55250[37]	R4066365	R4090096[72]	-	-	-	-
R44141608[267]	2-7/8 "	R42R55250	R42R55250[37]	R4066365	R4090096[72]	-	-	-	-
N/A	1-3/4 "	R4133400	R4133400	R4166917	NR	-	-	-	-
R44141858[275]	2-19/32 "	R42R55314	R42R55314[37]	R40107771	R4090100P[72]	R4111912[331]	R4122386	R4577503	R4577503
R44141858[275]	2-7/8 "	R42R55250	R42R55250[37]	R4066365	R4090096[72]	R4111294[332]	R4122346	R458632	R458632
23-122920-002[273]	2-7/8 "	R42R55250	R42R55250[37]	R4066365	R4090096[72]	R4111993[302]	R4122386	R4577503	R4577503
R44141476[268]	3-3/8 "	R42R55099	R42R55098[37]	R4066780	R4090021[201]	R4111294[332]	R4122346	R4577503	R4577503
23-123552-004[266]	2-19/32 "	R42R55314	R42R55314[37]	R40107771	R4090100P[72]	R4111294[332]	R4122346	R458632	R458632
23-122701-002[269]	2-7/8 "	R42R55250	R42R55250[37]	R4066365	R4090096[72]	R4111294[332]	R4122346	R4577503	R4577503
23-123552-004[266]	2-19/32 "	R42R55314	R42R55314[37]	R40107771	R4090100P[72]	R4111993[302]	R4122386	R4577503	R4577503
23-122920-002[273]	3-3/8 "	R42R55099	R42R55098[37]	R4066780	R4090021[201]	R4111993[302]	R4122386	R4577503	R4577503
R44141476[268]	3-3/8 "	R42R55099	R42R55098[37]	R4066780	R4090021[201]	R4111993[302]	R4122386	R4577503	R4577503
23-123552-004[266]	2-19/32 "	R42R55314	R42R55314[37]	R40107771	R4090100P[72]	R4111993[302]	R4122386	R458632	R458632
23-123572-004[271]	3-3/8 "	R42R55099	R42R55098[37]	R4066780	R4090021[201]	R4111912[331]	R4122386	R458632	R458632
23-123552-004[266]	2-7/8 "	R42R55250	R42R55250[37]	R4066365	R4090096[72]	R4111294[332]	R4122346	R4577503	R4577503
R44141476[268]	2-19/32 "	R42R55314	R42R55314[37]	R40107771	R4090100P[72]	R4111993[302]	R4122386	R4577503	R4577503
23-123552-004[266]	2-19/32 "	R42R55314	R42R55314[37]	R40107771	R4090100P[72]	R4111912[331]	R4122386	R458632	R458632
R44141858[275]	3-3/8 "	R42R55099	R42R55098[37]	R4066780	R4090021[201]	R4111993[302]	R4122386	R458632	R458632
23-122920-002[273]	2-19/32 "	R42R55314	R42R55314[37]	R40107771	R4090100P[72]	R4111294[332]	R4122346	R4577503	R4577503
23-122527-002[272]	2-7/8 "	R42R55250	R42R55250[37]	R4066365	R4090096[72]	R4111993[302]	R4122386	R4577503	R4577503
23-123572-004[271]	2-7/8 "	R42R55250	R42R55250[37]	R4066365	R4090096[72]	R4111294[332]	R4122346	R4577503	R4577503
23-122920-002[273]	2-7/8 "	R42R55250	R42R55250[37]	R4066365	R4090096[72]	R4111294[332]	R4122346	R458632	R458632
23-122701-002[269]	2-19/32 "	R42R55314	R42R55314[37]	R40107771	R4090100P[72]	R4111294[332]	R4122346	R458632	R458632
23-122527-002[272]	3-3/8 "	R42R55099	R42R55098[37]	R4066780	R4090021[201]	R4111912[331]	R4122386	R458632	R458632
23-123572-004[271]	2-7/8 "	R42R55250	R42R55250[37]	R4066365	R4090096[72]	R4111993[302]	R4122386	R4577503	R4577503
23-123552-004[266]	3-3/8 "	R42R55099	R42R55098[37]	R4066780	R4090021[201]	R4111294[332]	R4122346	R4577503	R4577503
23-123572-004[271]	2-19/32 "	R42R55314	R42R55314[37]	R40107771	R4090100P[72]	R4111294[332]	R4122346	R4577503	R4577503
23-122701-002[269]	3-3/8 "	R42R55099	R42R55098[37]	R4066780	R4090021[201]	R4111912[331]	R4122386	R4577503	R4577503
23-123572-004[271]	2-7/8 "	R42R55250	R42R55250[37]	R4066365	R4090096[72]	R4111993[302]	R4122386	R458632	R458632
23-123552-004[266]	2-19/32 "	R42R55314	R42R55314[37]	R40107771	R4090100P[72]	R4111294[332]	R4122346	R4577503	R4577503
23-122920-002[273]	2-7/8 "	R42R55250	R42R55250[37]	R4066365	R4090096[72]	R4111912[331]	R4122386	R4577503	R4577503

272 - 6 Stud, U Shape
302 - Power Brakes, Dual System
273 - 5 Stud, U Shape, .780 Dia. Studs
331 - Power Brakes, Delco Dual System
275 - 5 Stud, U Shape, .656 Dia. Studs
332 - Power Brakes, Hydraulic Booster

MAKE MODEL YEAR AXLE CODE AXLE WEIGHT	AXLE & BRK. TYPE	BRK. MFG.	BRAKE SIZE	FMSI	MERITOR DISC PAD OR BRAKE SHOE	MERITOR GUIDE PIN OR RETURN SPRING KIT	MERITOR CALIPER HWD. KIT OR RETURN SPRING KIT	MERITOR ADJUSTER KIT (LEFT WHEEL)	MERITOR ADJUSTER KIT (RIGHT WHEEL)
ITE(Cont.)									
160, 1600, 1650 SERIES(Cont.)									
1983									
S1600, S1652, S1654									
Conventional	Fd	BX		7108 - D184	MD184	R40H5010	R40H5519	NR	NR
	Fd	BX		7108 - D184	MD184	R40H5010	R40H5519	NR	NR
	Fd	BX		7108 - D184	MD184	R40H5010	R40H5519	NR	NR
	Fd	BX		7108 - D184	MD184	R40H5010	R40H5519	NR	NR
	Fd	BX		7108 - D184	MD184	R40H5010	R40H5519	NR	NR
	Fd	BX		7108 - D184	MD184	R40H5010	R40H5519	NR	NR
	Fd	BX		7108 - D184	MD184	R40H5010	R40H5519	NR	NR
	Fd	BX		7142 - D225	MD225	R40H5010	R40H5522	NR	NR
	Fd	BX		7108 - D184	MD184	R40H5010	R40H5519	NR	NR
	Fd	BX		7108 - D184	MD184	R40H5010	R40H5519	NR	NR
	Fd	BX		7142 - D225	MD225	R40H5010	R40H5522	NR	NR
	Fd	BX		7142 - D225	MD225	R40H5010	R40H5522	NR	NR
	Fd	BX		7108 - D184	MD184	R40H5010	R40H5519	NR	NR
	Fd	BX		7108 - D184	MD184	R40H5010	R40H5519	NR	NR
	Fd	BX		7108 - D184	MD184	R40H5010	R40H5519	NR	NR
	Fd	BX		7142 - D225	MD225	R40H5010	R40H5522	NR	NR
	Fd	BX		7142 - D225	MD225	R40H5010	R40H5522	NR	NR
	Fd	BX		7108 - D184	MD184	R40H5010	R40H5519	NR	NR
	Fd	BX		7108 - D184	MD184	R40H5010	R40H5519	NR	NR
	Fd	BX		7142 - D225	MD225	R40H5010	R40H5522	NR	NR
	Fd	BX		7108 - D184	MD184	R40H5010	R40H5519	NR	NR
	Fd	BX		7108 - D184	MD184	R40H5010	R40H5519	NR	NR
	Fd	BX		7108 - D184	MD184	R40H5010	R40H5519	NR	NR
	Fd	BX		7142 - D225	MD225	R40H5010	R40H5522	NR	NR
	Fd	BX		7142 - D225	MD225	R40H5010	R40H5522	NR	NR
	Fd	BX		7108 - D184	MD184	R40H5010	R40H5519	NR	NR
	Fd	BX		7108 - D184	MD184	R40H5010	R40H5519	NR	NR
	Fd	BX		7108 - D184	MD184	R40H5010	R40H5519	NR	NR
	Fd	BX		7108 - D184	MD184	R40H5010	R40H5519	NR	NR
	Fd	BX		7108 - D184	MD184	R40H5010	R40H5519	NR	NR
	Fd	BX		7108 - D184	MD184	R40H5010	R40H5519	NR	NR
	Fd	BX		7108 - D184	MD184	R40H5010	R40H5519	NR	NR
	Fd	BX		7142 - D225	MD225	R40H5010	R40H5522	NR	NR
	Fd	BX		7142 - D225	MD225	R40H5010	R40H5522	NR	NR
	Fd	BX		7108 - D184	MD184	R40H5010	R40H5519	NR	NR
	Fd	BX		7108 - D184	MD184	R40H5010	R40H5519	NR	NR
	Fd	BX		7108 - D184	MD184	R40H5010	R40H5519	NR	NR
	Fd	BX		7108 - D184	MD184	R40H5010	R40H5519	NR	NR
	Fd	BX		7108 - D184	MD184	R40H5010	R40H5519	NR	NR
	Fd	BX		7142 - D225	MD225	R40H5010	R40H5522	NR	NR
	Fd	BX		7142 - D225	MD225	R40H5010	R40H5522	NR	NR
	Fd	BX		7108 - D184	MD184	R40H5010	R40H5519	NR	NR
	Fd	BX		7108 - D184	MD184	R40H5010	R40H5519	NR	NR
	Fd	BX		7108 - D184	MD184	R40H5010	R40H5519	NR	NR
	Fd	BX		7142 - D225	MD225	R40H5010	R40H5522	NR	NR
	Fd	BX		7142 - D225	MD225	R40H5010	R40H5522	NR	NR
	Fd	BX		7108 - D184	MD184	R40H5010	R40H5519	NR	NR
	Fd	BX		7142 - D225	MD225	R40H5010	R40H5522	NR	NR
	Fd	BX		7108 - D184	MD184	R40H5010	R40H5519	NR	NR
	Fd	BX		7108 - D184	MD184	R40H5010	R40H5519	NR	NR
	Fd	BX		7108 - D184	MD184	R40H5010	R40H5519	NR	NR
	Fd	BX		7108 - D184	MD184	R40H5010	R40H5519	NR	NR
	Fd	BX		7142 - D225	MD225	R40H5010	R40H5522	NR	NR
	Fd	BX		7108 - D184	MD184	R40H5010	R40H5519	NR	NR
	Fd	BX		7108 - D184	MD184	R40H5010	R40H5519	NR	NR
	Fd	BX		7108 - D184	MD184	R40H5010	R40H5519	NR	NR
	Fd	BX		7142 - D225	MD225	R40H5010	R40H5522	NR	NR
	Fd	BX		7108 - D184	MD184	R40H5010	R40H5519	NR	NR
	Fd	BX		7142 - D225	MD225	R40H5010	R40H5522	NR	NR
	Fd	BX		7108 - D184	MD184	R40H5010	R40H5519	NR	NR
	Fd	BX		7142 - D225	MD225	R40H5010	R40H5522	NR	NR

37 - Also available as a New unit
266 - 10 Stud, Hat Shaped
271 - 6 Stud, Hat Shape

72 - Phenolic/Steel Face
268 - 5 Stud, Hat Shape
272 - 6 Stud, U Shape

201 - Steel Piston
269 - 5 Stud, U Shape
273 - 5 Stud, U Shape, .780 Dia. Studs

MERITOR DRUM OR ROTOR NO.	CALIPER OR CYLINDER BORE SIZE	MERITOR CALIPER OR WHEEL CYLINDER (LEFT)	MERITOR CALIPER OR WHEEL CYLINDER (RIGHT)	MERITOR CALIPER OR WHEEL CYLINDER REPAIR KIT	MERITOR CALIPER PISTON	MERITOR MASTER CYLINDER	MERITOR MASTER CYLINDER KIT	MERITOR BRAKE HOSE (LEFT)	MERITOR BRAKE HOSE (RIGHT)
									ITE(Cont.)
									160, 1600, 1650 SERIES(Cont.)
23-122920-002[273]	2-19/32 "	R42R55314	R42R55314[37]	R40107771	R4090100P[72]	R4111912[331]	R4122386	R458632	R458632
R44141858[275]	3-3/8 "	R42R55099	R42R55098[37]	R4066780	R4090021[201]	R4111912[331]	R4122386	R4577503	R4577503
R44141858[275]	2-19/32 "	R42R55314	R42R55314[37]	R40107771	R4090100P[72]	R4111294[332]	R4122346	R458632	R458632
23-122920-002[273]	3-3/8 "	R42R55099	R42R55098[37]	R4066780	R4090021[201]	R4111912[331]	R4122386	R458632	R458632
23-123572-004[271]	2-19/32 "	R42R55314	R42R55314[37]	R40107771	R4090100P[72]	R4111993[302]	R4122386	R4577503	R4577503
23-123552-004[266]	3-3/8 "	R42R55099	R42R55098[37]	R4066780	R4090021[201]	R4111993[302]	R4122386	R4577503	R4577503
23-122701-002[269]	2-19/32 "	R42R55314	R42R55314[37]	R40107771	R4090100P[72]	R4111993[302]	R4122386	R458632	R458632
23-122527-002[272]	2-7/8 "	R42R55250	R42R55250[37]	R4066365	R4090096[72]	R4111912[331]	R4122386	R4577503	R4577503
R44141858[275]	3-3/8 "	R42R55099	R42R55098[37]	R4066780	R4090021[201]	R4111912[331]	R4122386	R458632	R458632
23-122701-002[269]	3-3/8 "	R42R55099	R42R55098[37]	R4066780	R4090021[201]	R4111993[302]	R4122386	R458632	R458632
23-122527-002[272]	2-7/8 "	R42R55250	R42R55250[37]	R4066365	R4090096[72]	R4111294[332]	R4122346	R458632	R458632
23-122701-002[269]	2-7/8 "	R42R55250	R42R55250[37]	R4066365	R4090096[72]	R4111294[332]	R4122346	R458632	R458632
R44141476[268]	2-19/32 "	R42R55314	R42R55314[37]	R40107771	R4090100P[72]	R4111912[331]	R4122386	R458632	R458632
23-123552-004[266]	3-3/8 "	R42R55099	R42R55098[37]	R4066780	R4090021[201]	R4111993[302]	R4122386	R458632	R458632
R44141858[275]	2-19/32 "	R42R55314	R42R55314[37]	R40107771	R4090100P[72]	R4111993[302]	R4122386	R458632	R458632
R44141476[268]	2-7/8 "	R42R55250	R42R55250[37]	R4066365	R4090096[72]	R4111294[332]	R4122346	R458632	R458632
23-123552-004[266]	2-7/8 "	R42R55250	R42R55250[37]	R4066365	R4090096[72]	R4111912[331]	R4122386	R458632	R458632
23-123572-004[271]	3-3/8 "	R42R55099	R42R55098[37]	R4066780	R4090021[201]	R4111294[332]	R4122346	R458632	R458632
23-122527-002[272]	2-19/32 "	R42R55314	R42R55314[37]	R40107771	R4090100P[72]	R4111294[332]	R4122346	R4577503	R4577503
R44141476[268]	2-7/8 "	R42R55250	R42R55250[37]	R4066365	R4090096[72]	R4111912[331]	R4122386	R458632	R458632
23-122920-002[273]	2-19/32 "	R42R55314	R42R55314[37]	R40107771	R4090100P[72]	R4111993[302]	R4122386	R4577503	R4577503
R44141476[268]	3-3/8 "	R42R55099	R42R55098[37]	R4066780	R4090021[201]	R4111912[331]	R4122386	R4577503	R4577503
R44141476[268]	2-19/32 "	R42R55314	R42R55314[37]	R40107771	R4090100P[72]	R4111912[331]	R4122386	R4577503	R4577503
R44141476[268]	2-7/8 "	R42R55250	R42R55250[37]	R4066365	R4090096[72]	R4111294[332]	R4122346	R4577503	R4577503
23-123552-004[266]	2-7/8 "	R42R55250	R42R55250[37]	R4066365	R4090096[72]	R4111993[302]	R4122386	R4577503	R4577503
23-123572-004[271]	3-3/8 "	R42R55099	R42R55098[37]	R4066780	R4090021[201]	R4111993[302]	R4122386	R458632	R458632
23-123572-004[271]	3-3/8 "	R42R55099	R42R55098[37]	R4066780	R4090021[201]	R4111912[331]	R4122386	R4577503	R4577503
23-122527-002[272]	2-19/32 "	R42R55314	R42R55314[37]	R40107771	R4090100P[72]	R4111912[331]	R4122386	R458632	R458632
R44141858[275]	2-19/32 "	R42R55314	R42R55314[37]	R40107771	R4090100P[72]	R4111294[332]	R4122346	R4577503	R4577503
23-123552-004[266]	2-19/32 "	R42R55314	R42R55314[37]	R40107771	R4090100P[72]	R4111912[331]	R4122386	R4577503	R4577503
23-122701-002[269]	2-19/32 "	R42R55314	R42R55314[37]	R40107771	R4090100P[72]	R4111993[302]	R4122386	R4577503	R4577503
R44141476[268]	2-19/32 "	R42R55314	R42R55314[37]	R40107771	R4090100P[72]	R4111294[332]	R4122346	R458632	R458632
23-122920-002[273]	2-7/8 "	R42R55250	R42R55250[37]	R4066365	R4090096[72]	R4111294[332]	R4122346	R4577503	R4577503
23-122701-002[269]	2-7/8 "	R42R55250	R42R55250[37]	R4066365	R4090096[72]	R4111993[302]	R4122386	R4577503	R4577503
23-122920-002[273]	2-19/32 "	R42R55314	R42R55314[37]	R40107771	R4090100P[72]	R4111993[302]	R4122386	R458632	R458632
23-122527-002[272]	3-3/8 "	R42R55099	R42R55098[37]	R4066780	R4090021[201]	R4111993[302]	R4122386	R458632	R458632
23-123552-004[266]	3-3/8 "	R42R55099	R42R55098[37]	R4066780	R4090021[201]	R4111912[331]	R4122386	R4577503	R4577503
R44141476[268]	3-3/8 "	R42R55099	R42R55098[37]	R4066780	R4090021[201]	R4111912[331]	R4122386	R458632	R458632
23-122920-002[273]	3-3/8 "	R42R55099	R42R55098[37]	R4066780	R4090021[201]	R4111294[332]	R4122346	R4577503	R4577503
23-122701-002[269]	2-7/8 "	R42R55250	R42R55250[37]	R4066365	R4090096[72]	R4111912[331]	R4122386	R458632	R458632
23-122527-002[272]	2-7/8 "	R42R55250	R42R55250[37]	R4066365	R4090096[72]	R4111912[331]	R4122386	R458632	R458632
23-123572-004[271]	2-19/32 "	R42R55314	R42R55314[37]	R40107771	R4090100P[72]	R4111993[302]	R4122386	R458632	R458632
23-122527-002[272]	3-3/8 "	R42R55099	R42R55098[37]	R4066780	R4090021[201]	R4111993[302]	R4122386	R4577503	R4577503
R44141858[275]	3-3/8 "	R42R55099	R42R55098[37]	R4066780	R4090021[201]	R4111294[332]	R4122346	R4577503	R4577503
23-123572-004[271]	2-7/8 "	R42R55250	R42R55250[37]	R4066365	R4090096[72]	R4111294[332]	R4122346	R458632	R458632
23-122527-002[272]	2-7/8 "	R42R55250	R42R55250[37]	R4066365	R4090096[72]	R4111993[302]	R4122386	R458632	R458632
R44141858[275]	2-19/32 "	R42R55314	R42R55314[37]	R40107771	R4090100P[72]	R4111912[331]	R4122386	R458632	R458632
23-122527-002[272]	2-7/8 "	R42R55250	R42R55250[37]	R4066365	R4090096[72]	R4111294[332]	R4122346	R4577503	R4577503
23-122920-002[273]	2-19/32 "	R42R55314	R42R55314[37]	R40107771	R4090100P[72]	R4111912[331]	R4122386	R4577503	R4577503
23-123572-004[271]	3-3/8 "	R42R55099	R42R55098[37]	R4066780	R4090021[201]	R4111993[302]	R4122386	R4577503	R4577503
23-122701-002[269]	2-7/8 "	R42R55250	R42R55250[37]	R4066365	R4090096[72]	R4111993[302]	R4122386	R458632	R458632
23-122920-002[273]	3-3/8 "	R42R55099	R42R55098[37]	R4066780	R4090021[201]	R4111294[332]	R4122346	R458632	R458632
23-122701-002[269]	3-3/8 "	R42R55099	R42R55098[37]	R4066780	R4090021[201]	R4111912[331]	R4122386	R458632	R458632
23-122527-002[272]	2-19/32 "	R42R55314	R42R55314[37]	R40107771	R4090100P[72]	R4111993[302]	R4122386	R458632	R458632
23-122701-002[269]	2-19/32 "	R42R55314	R42R55314[37]	R40107771	R4090100P[72]	R4111912[331]	R4122386	R4577503	R4577503
23-123552-004[266]	2-7/8 "	R42R55250	R42R55250[37]	R4066365	R4090096[72]	R4111993[302]	R4122386	R458632	R458632
23-123552-004[266]	3-3/8 "	R42R55099	R42R55098[37]	R4066780	R4090021[201]	R4111294[332]	R4122346	R458632	R458632
23-123572-004[271]	2-19/32 "	R42R55314	R42R55314[37]	R40107771	R4090100P[72]	R4111912[331]	R4122386	R458632	R458632
R44141476[268]	3-3/8 "	R42R55099	R42R55098[37]	R4066780	R4090021[201]	R4111993[302]	R4122386	R458632	R458632
R44141476[268]	2-7/8 "	R42R55250	R42R55250[37]	R4066365	R4090096[72]	R4111993[302]	R4122386	R4577503	R4577503
R44141476[268]	2-19/32 "	R42R55314	R42R55314[37]	R40107771	R4090100P[72]	R4111294[332]	R4122346	R4577503	R4577503
R44141858[275]	2-7/8 "	R42R55250	R42R55250[37]	R4066365	R4090096[72]	R4111912[331]	R4122386	R458632	R458632
23-122527-002[272]	2-19/32 "	R42R55314	R42R55314[37]	R40107771	R4090100P[72]	R4111294[332]	R4122346	R458632	R458632
23-122920-002[273]	2-7/8 "	R42R55250	R42R55250[37]	R4066365	R4090096[72]	R4111912[331]	R4122386	R458632	R458632

275 - 5 Stud, U Shape, .656 Dia. Studs
302 - Power Brakes, Dual System
331 - Power Brakes, Delco Dual System
332 - Power Brakes, Hydraulic Booster

MAKE MODEL YEAR AXLE CODE AXLE WEIGHT	AXLE & BRK. TYPE	BRK. MFG.	BRAKE SIZE	FMSI	MERITOR DISC PAD OR BRAKE SHOE	MERITOR GUIDE PIN OR RETURN SPRING KIT	MERITOR CALIPER HWD. KIT OR RETURN SPRING KIT	MERITOR ADJUSTER KIT (LEFT WHEEL)	MERITOR ADJUSTER KIT (RIGHT WHEEL)
ITE(Cont.)									
160, 1600, 1650 SERIES(Cont.)									
1983									
	Fd	BX		7142 - D225	MD225	R40H5010	R40H5522	NR	NR
	Fd	BX		7108 - D184	MD184	R40H5010	R40H5519	NR	NR
	Fd	BX		7108 - D184	MD184	R40H5010	R40H5519	NR	NR
	Fd	BX		7108 - D184	MD184	R40H5010	R40H5519	NR	NR
	Fd	BX		7108 - D184	MD184	R40H5010	R40H5519	NR	NR
	Fd	BX		7142 - D225	MD225	R40H5010	R40H5522	NR	NR
	Fd	BX		7142 - D225	MD225	R40H5010	R40H5522	NR	NR
	Fd	BX		7108 - D184	MD184	R40H5010	R40H5519	NR	NR
	Fd	BX		7108 - D184	MD184	R40H5010	R40H5519	NR	NR
	Fd	BX		7142 - D225	MD225	R40H5010	R40H5522	NR	NR
	Fd	BX		7142 - D225	MD225	R40H5010	R40H5522	NR	NR
	Fd	BX		7108 - D184	MD184	R40H5010	R40H5519	NR	NR
	Fd	BX		7108 - D184	MD184	R40H5010	R40H5519	NR	NR
	Fd	BX		7108 - D184	MD184	R40H5010	R40H5519	NR	NR
	Fd	BX		7108 - D184	MD184	R40H5010	R40H5519	NR	NR
	Fd	BX		7142 - D225	MD225	R40H5010	R40H5522	NR	NR
	Fd	BX		7108 - D184	MD184	R40H5010	R40H5519	NR	NR
	Fd	BX		7108 - D184	MD184	R40H5010	R40H5519	NR	NR
	Fd	BX		7142 - D225	MD225	R40H5010	R40H5522	NR	NR
	Fd	BX		7108 - D184	MD184	R40H5010	R40H5519	NR	NR
	Fd	BX		7108 - D184	MD184	R40H5010	R40H5519	NR	NR
	Fd	BX		7108 - D184	MD184	R40H5010	R40H5519	NR	NR
	Fd	BX		7108 - D184	MD184	R40H5010	R40H5519	NR	NR
	Fd	BX		7142 - D225	MD225	R40H5010	R40H5522	NR	NR
	Fd	BX		7142 - D225	MD225	R40H5010	R40H5522	NR	NR
	Fd	BX		7108 - D184	MD184	R40H5010	R40H5519	NR	NR
	Fd	BX		7108 - D184	MD184	R40H5010	R40H5519	NR	NR
	Fd	BX		7108 - D184	MD184	R40H5010	R40H5519	NR	NR
	Fd	BX		7108 - D184	MD184	R40H5010	R40H5519	NR	NR
	Fd	BX		7142 - D225	MD225	R40H5010	R40H5522	NR	NR
	Fd	BX		7142 - D225	MD225	R40H5010	R40H5522	NR	NR
	Fd	BX		7142 - D225	MD225	R40H5010	R40H5522	NR	NR
	Fd	BX		7108 - D184	MD184	R40H5010	R40H5519	NR	NR
	Rd	BX		7142 - D225	MD225	R40H5010	R40H5522	NR	NR
	Rd	BX		7142 - D225	MD225	R40H5010	R40H5522	NR	NR
	Rd	BX		7108 - D184	MD184	R40H5010	R40H5519	NR	NR
	Rd	BX		7142 - D225	MD225	R40H5010	R40H5522	NR	NR
	Rd	BX		7108 - D184	MD184	R40H5010	R40H5519	NR	NR
	Rd	BX		7142 - D225	MD225	R40H5010	R40H5522	NR	NR
	Rd	BX		7108 - D184	MD184	R40H5010	R40H5519	NR	NR
	Rd	BX		7108 - D184	MD184	R40H5010	R40H5519	NR	NR
	Rd	BX		7142 - D225	MD225	R40H5010	R40H5522	NR	NR
	Rd	BX		7142 - D225	MD225	R40H5010	R40H5522	NR	NR
	Rd	BX		7108 - D184	MD184	R40H5010	R40H5519	NR	NR
	Rd	BX		7108 - D184	MD184	R40H5010	R40H5519	NR	NR
1982 M1600, M1652, M1654 Metro Series, Forward Control FA209	Fa	WG	15 " x 3 "	1245C - 321	R700321	R40H521	R40H9237	R40H3502	R40H3503
	Fm	WG	15 " x 3 "	1245A - 235	R700235	R40H521	R40H9201	R40H3524	R40H3524
M1600, M1652, M1654 Metro Series, Forward Control FA69	Fa	WG	14 " x 2-1/2 "	1294A - 325	N/A	R40H521	R40H9237	R40H3502	R40H3503
	Fm	WG	14 " x 2-1/2 "	1294 - 296	N/A	R40H521	R40H9201	R40H3524	R40H3524
M1600, M1652, M1654 Metro Series, Forward Control FA73, 101	Fa	WG	15 " x 3-1/2 "	1280B - 322	R464004	R40H521	R40H9237	R40H3502	R40H3503
	Fm	WG	15 " x 3-1/2 "	1280 - 463	R700463	R40H521	R40H9201	R40H3524	R40H3524
M1600, M1652, M1654 Metro Series, Forward Control FA73, 101, 109	Fa	WG	15 " x 3 "	1245C - 321	R700321	R40H521	R40H9237	R40H3502	R40H3503

37 - Also available as a New unit
201 - Steel Piston
268 - 5 Stud, Hat Shape
52 - 18" Length
266 - 10 Stud, Hat Shaped
269 - 5 Stud, U Shape
72 - Phenolic/Steel Face
267 - 10 Stud, U Shaped
270 - 5 Stud, U Shape, .766 Dia. Studs

MERITOR DRUM OR ROTOR NO.	CALIPER OR CYLINDER BORE SIZE	MERITOR CALIPER OR WHEEL CYLINDER (LEFT)	MERITOR CALIPER OR WHEEL CYLINDER (RIGHT)	MERITOR CALIPER OR WHEEL CYLINDER REPAIR KIT	MERITOR CALIPER PISTON	MERITOR MASTER CYLINDER	MERITOR MASTER CYLINDER KIT	MERITOR BRAKE HOSE (LEFT)	MERITOR BRAKE HOSE (RIGHT)
									ITE(Cont.)
									160, 1600, 1650 SERIES(Cont.)
R44141858[275]	2-7/8 "	R42R55250	R42R55250[37]	R4066365	R4090096[72]	R4111294[332]	R4122346	R4577503	R4577503
R44141858[275]	3-3/8 "	R42R55099	R42R55098[37]	R4066780	R4090021[201]	R4111993[302]	R4122386	R4577503	R4577503
23-122701-002[269]	3-3/8 "	R42R55099	R42R55098[37]	R4066780	R4090021[201]	R4111294[332]	R4122346	R4577503	R4577503
23-122527-002[272]	3-3/8 "	R42R55099	R42R55098[37]	R4066780	R4090021[201]	R4111294[332]	R4122346	R4577503	R4577503
23-123572-004[271]	2-19/32 "	R42R55314	R42R55314[37]	R40107771	R4090100P[72]	R4111294[332]	R4122346	R458632	R458632
R44141476[268]	2-7/8 "	R42R55250	R42R55250[37]	R4066365	R4090096[72]	R4111912[331]	R4122386	R4577503	R4577503
R44141858[275]	2-7/8 "	R42R55250	R42R55250[37]	R4066365	R4090096[72]	R4111912[331]	R4122386	R4577503	R4577503
23-122527-002[272]	2-19/32 "	R42R55314	R42R55314[37]	R40107771	R4090100P[72]	R4111993[302]	R4122386	R4577503	R4577503
23-123572-004[271]	2-19/32 "	R42R55314	R42R55314[37]	R40107771	R4090100P[72]	R4111912[331]	R4122386	R4577503	R4577503
23-122920-002[273]	2-7/8 "	R42R55250	R42R55250[37]	R4066365	R4090096[72]	R4111993[302]	R4122386	R458632	R458632
23-123552-004[266]	2-7/8 "	R42R55250	R42R55250[37]	R4066365	R4090096[72]	R4111912[331]	R4122386	R4577503	R4577503
R44141858[275]	3-3/8 "	R42R55099	R42R55098[37]	R4066780	R4090021[201]	R4111294[332]	R4122346	R458632	R458632
R44141476[268]	2-19/32 "	R42R55314	R42R55314[37]	R40107771	R4090100P[72]	R4111993[302]	R4122386	R458632	R458632
23-122527-002[272]	3-3/8 "	R42R55099	R42R55098[37]	R4066780	R4090021[201]	R4111294[332]	R4122346	R458632	R458632
23-122920-002[273]	3-3/8 "	R42R55099	R42R55098[37]	R4066780	R4090021[201]	R4111993[302]	R4122386	R458632	R458632
23-122701-002[269]	2-7/8 "	R42R55250	R42R55250[37]	R4066365	R4090096[72]	R4111912[331]	R4122386	R4577503	R4577503
23-122920-002[273]	2-19/32 "	R42R55314	R42R55314[37]	R40107771	R4090100P[72]	R4111294[332]	R4122346	R458632	R458632
23-122701-002[269]	2-19/32 "	R42R55314	R42R55314[37]	R40107771	R4090100P[72]	R4111912[331]	R4122386	R458632	R458632
23-123552-004[266]	2-7/8 "	R42R55250	R42R55250[37]	R4066365	R4090096[72]	R4111294[332]	R4122346	R458632	R458632
23-122920-002[273]	3-3/8 "	R42R55099	R42R55098[37]	R4066780	R4090021[201]	R4111912[331]	R4122386	R4577503	R4577503
23-123552-004[266]	3-3/8 "	R42R55099	R42R55098[37]	R4066780	R4090021[201]	R4111912[331]	R4122386	R458632	R458632
R44141858[275]	2-19/32 "	R42R55314	R42R55314[37]	R40107771	R4090100P[72]	R4111993[302]	R4122386	R4577503	R4577503
23-122701-002[269]	3-3/8 "	R42R55099	R42R55098[37]	R4066780	R4090021[201]	R4111993[302]	R4122386	R4577503	R4577503
R44141858[275]	2-7/8 "	R42R55250	R42R55250[37]	R4066365	R4090096[72]	R4111993[302]	R4122386	R4577503	R4577503
23-123572-004[271]	2-7/8 "	R42R55250	R42R55250[37]	R4066365	R4090096[72]	R4111912[331]	R4122386	R458632	R458632
23-122527-002[272]	3-3/8 "	R42R55099	R42R55098[37]	R4066780	R4090021[201]	R4111912[331]	R4122386	R4577503	R4577503
23-122701-002[269]	2-19/32 "	R42R55314	R42R55314[37]	R40107771	R4090100P[72]	R4111294[332]	R4122346	R4577503	R4577503
23-123572-004[271]	3-3/8 "	R42R55099	R42R55098[37]	R4066780	R4090021[201]	R4111294[332]	R4122346	R4577503	R4577503
23-122527-002[272]	2-19/32 "	R42R55314	R42R55314[37]	R40107771	R4090100P[72]	R4111912[331]	R4122386	R4577503	R4577503
23-122701-002[269]	3-3/8 "	R42R55099	R42R55098[37]	R4066780	R4090021[201]	R4111294[332]	R4122346	R458632	R458632
23-123572-004[271]	2-7/8 "	R42R55250	R42R55250[37]	R4066365	R4090096[72]	R4111912[331]	R4122386	R4577503	R4577503
R44141858[275]	2-7/8 "	R42R55250	R42R55250[37]	R4066365	R4090096[72]	R4111993[302]	R4122386	R458632	R458632
R44141476[268]	2-7/8 "	R42R55250	R42R55250[37]	R4066365	R4090096[72]	R4111993[302]	R4122386	R458632	R458632
R44141476[268]	3-3/8 "	R42R55099	R42R55098[37]	R4066780	R4090021[201]	R4111294[332]	R4122346	R458632	R458632
23-123572-004[271]	2-7/8 "	R42R55250	R42R55250[37]	R4066365	R4090096[72]	-	-	R458634[52]	R458634
23-123552-004[266]	2-7/8 "	R42R55250	R42R55250[37]	R4066365	R4090096[72]	-	-	R458634[52]	R458634
R44141608[267]	2-19/32 "	R42R55314	R42R55314[37]	R40107771	R4090100P[72]	-	-	R458634[52]	R458634
R44141629[269]	2-7/8 "	R42R55250	R42R55250[37]	R4066365	R4090096[72]	-	-	R458634[52]	R458634
23-123552-004[266]	2-19/32 "	R42R55314	R42R55314[37]	R40107771	R4090100P[72]	-	-	R458634[52]	R458634
R44141608[267]	2-7/8 "	R42R55250	R42R55250[37]	R4066365	R4090096[72]	-	-	R458634[52]	R458634
R44141629[269]	2-19/32 "	R42R55314	R42R55314[37]	R40107771	R4090100P[72]	-	-	R458634[52]	R458634
R44141628[269]	2-19/32 "	R42R55314	R42R55314[37]	R40107771	R4090100P[72]	-	-	R458634[52]	R458634
R44141628[269]	2-7/8 "	R42R55250	R42R55250[37]	R4066365	R4090096[72]	-	-	R458634[52]	R458634
R44141627[270]	2-7/8 "	R42R55250	R42R55250[37]	R4066365	R4090096[72]	-	-	R458634[52]	R458634
R44141627[270]	2-19/32 "	R42R55314	R42R55314[37]	R40107771	R4090100P[72]	-	-	R458634[52]	R458634
23-123572-004[271]	2-19/32 "	R42R55314	R42R55314[37]	R40107771	R4090100P[72]	-	-	R458634[52]	R458634
N/A	1-1/4 "	R4133581	R4133582	R4166923	NR	-	-	-	-
N/A	1-1/4 "	R4133581	R4133582	R4166923	NR	-	-	-	-
N/A	1-1/8 "	R4133714	R4133715	R4166926	NR	-	-	-	-
N/A	1-1/8 "	R4133714	R4133715	R4166926	NR	-	-	-	-
N/A	1-1/4 "	R4133581	R4133582	R4166923	NR	-	-	-	-
N/A	1-1/4 "	R4133581	R4133582	R4166923	NR	-	-	-	-
N/A	1-1/4 "	R4133581	R4133582	R4166923	NR	-	-	-	-

271 - 6 Stud, Hat Shape
272 - 6 Stud, U Shape
273 - 5 Stud, U Shape, .780 Dia. Studs
275 - 5 Stud, U Shape, .656 Dia. Studs
302 - Power Brakes, Dual System
331 - Power Brakes, Delco Dual System
332 - Power Brakes, Hydraulic Booster

MAKE MODEL YEAR AXLE CODE AXLE WEIGHT	AXLE & BRK. TYPE	BRK. MFG.	BRAKE SIZE	FMSI	MERITOR DISC PAD OR BRAKE SHOE	MERITOR GUIDE PIN OR RETURN SPRING KIT	MERITOR CALIPER HWD. KIT OR RETURN SPRING KIT	MERITOR ADJUSTER KIT (LEFT WHEEL)	MERITOR ADJUSTER KIT (RIGHT WHEEL)
ITE(Cont.)									
160, 1600, 1650 SERIES(Cont.)									
1982									
	Fm	WG	15 " x 3 "	1245A - 235	R700235	R40H521	R40H9201	R40H3524	R40H3524
M1600, M1652, M1654 Metro Series, Forward Control									
FA74	Fa	WG	15 " x 3 "	1245C - 321	R700321	R40H521	R40H9237	R40H3502	R40H3503
	Fm	WG	15 " x 3 "	1245A - 235	R700235	R40H521	R40H9201	R40H3524	R40H3524
M1600, M1652, M1654 Metro Series, Forward Control									
FA78, 81	Fa	WG	15 " x 3 "	1245C - 321	R700321	R40H521	R40H9237	R40H3502	R40H3503
M1600, M1652, M1654 Metro Series, Forward Control									
FA99	Fa	WG	15 " x 3 "	1245C - 321	R700321	R40H521	R40H9237	R40H3502	R40H3503
	Fm	WG	15 " x 3 "	1245A - 235	R700235	R40H521	R40H9201	R40H3524	R40H3524
M1600, M1652, M1654 Metro Series, Forward Control									
RA25, 126, 184	Ra	WG	15 " x 4 "	4645A - 376	Discontinued	R40H597	R40H9200	R40H3540	R40H3541
	Ra	WG	15 " x 5 "	1252 - 346	R700346	R40H597	R40H9200	R40H3540	R40H3541
	Rm	WG	15 " x 4 "	4645A - 376	Discontinued	R40H597	R40H9200	R40H3518	R404148
	Rm	WG	15 " x 5 "	1252 - 346	R700346	R40H597	R40H9200	R40H3518	R404148
M1600, M1652, M1654 Metro Series, Forward Control									
RA30, 39, 127, 187, 189	Ra	WG	15 " x 5 "	1252 - 346	R700346	R40H597	R40H9200	R40H3540	R40H3541
	Rm	WG	15 " x 5 "	1252 - 346	R700346	R40H597	R40H9200	R40H3518	R404148
M1600, M1652, M1654 Metro Series, Forward Control									
RA39	Ra	WG	15 " x 6 "	4596 - 381	R700381	R40H597	R40H9200	R40H3540	R40H3541
M1600, M1652, M1654 Metro Series, Forward Control									
RA39, 189	Ra	WG	16 " x 6 "	1255 - 386	N/A	R40H597	R40H9200	N/A	N/A
	Rm	WG	16 " x 6 "	1255 - 386	N/A	R40H597	R40H9200	R404149	R404150
M1600, M1652, M1654 Metro Series, Forward Control									
RA44	Ra	WG	15 " x 7 "	4597 - 383	R700383	R40H597	R40H9200	R40H3540	R40H3541
1981 M1600, M1652, M1654 Metro Series, Forward Control									
FA209	Fa	WG	15 " x 3 "	1245C - 321	R700321	R40H521	R40H9237	R40H3502	R40H3503
	Fm	WG	15 " x 3 "	1245A - 235	R700235	R40H521	R40H9201	R40H3524	R40H3524
M1600, M1652, M1654 Metro Series, Forward Control									
FA69	Fa	WG	14 " x 2-1/2 "	1294A - 325	N/A	R40H521	R40H9237	R40H3502	R40H3503
	Fm	WG	14 " x 2-1/2 "	1294 - 296	N/A	R40H521	R40H9201	R40H3524	R40H3524
M1600, M1652, M1654 Metro Series, Forward Control									
FA73, 101	Fa	WG	15 " x 3-1/2 "	1280B - 322	R464004	R40H521	R40H9237	R40H3502	R40H3503
	Fm	WG	15 " x 3-1/2 "	1280 - 463	R700463	R40H521	R40H9201	R40H3524	R40H3524
M1600, M1652, M1654 Metro Series, Forward Control									
FA73, 101, 109	Fa	WG	15 " x 3 "	1245C - 321	R700321	R40H521	R40H9237	R40H3502	R40H3503
	Fm	WG	15 " x 3 "	1245A - 235	R700235	R40H521	R40H9201	R40H3524	R40H3524
M1600, M1652, M1654 Metro Series, Forward Control									
FA74	Fa	WG	15 " x 3 "	1245C - 321	R700321	R40H521	R40H9237	R40H3502	R40H3503

MERITOR DRUM OR ROTOR NO.	CALIPER OR CYLINDER BORE SIZE	MERITOR CALIPER OR WHEEL CYLINDER (LEFT)	MERITOR CALIPER OR WHEEL CYLINDER (RIGHT)	MERITOR CALIPER OR WHEEL CYLINDER REPAIR KIT	MERITOR CALIPER PISTON	MERITOR MASTER CYLINDER	MERITOR MASTER CYLINDER KIT	MERITOR BRAKE HOSE (LEFT)	MERITOR BRAKE HOSE (RIGHT)
ITE(Cont.)									
160, 1600, 1650 SERIES(Cont.)									
N/A	1-1/8 "	R4133714	R4133715	R4166926	NR	-	-	-	-
N/A	1-1/4 "	R4133581	R4133582	R4166923	NR	-	-	-	-
N/A	1-1/4 "	R4133581	R4133582	R4166923	NR	-	-	-	-
N/A	1-1/8 "	R4133320	R4133321	R4166926	NR	-	-	-	-
N/A	1-1/4 "	R4133581	R4133582	R4166923	NR	-	-	-	-
N/A	1-1/4 "	R4133581	R4133582	R4166923	NR	-	-	-	-
N/A	1-1/2 "	R4133580	R4133580	Discontinued	NR	-	-	-	-
N/A	1-5/8 "	R4133338	R4133338	R4166689	NR	-	-	-	-
N/A	1-1/2 "	R4133580	R4133580	Discontinued	NR	-	-	-	-
N/A	1-5/8 "	R4133338	R4133338	R4166689	NR	-	-	-	-
N/A	1-1/2 "	R4133580	R4133580	Discontinued	NR	-	-	-	-
N/A	1-1/2 "	R4133580	R4133580	Discontinued	NR	-	-	-	-
N/A	1-5/8 "	R4133338	R4133338	R4166689	NR	-	-	-	-
N/A	1-7/8 "	R4133584	R4133584	R4166897	NR	-	-	-	-
N/A	1-7/8 "	R4133584	R4133584	R4166897	NR	-	-	-	-
N/A	1-3/4 "	R4133400	R4133400	R4166917	NR	-	-	-	-
N/A	1-1/4 "	R4133581	R4133582	R4166923	NR	-	-	-	-
N/A	1-1/4 "	R4133581	R4133582	R4166923	NR	-	-	-	-
N/A	1-1/8 "	R4133714	R4133715	R4166926	NR	-	-	-	-
N/A	1-1/8 "	R4133714	R4133715	R4166926	NR	-	-	-	-
N/A	1-1/4 "	R4133581	R4133582	R4166923	NR	-	-	-	-
N/A	1-1/4 "	R4133581	R4133582	R4166923	NR	-	-	-	-
N/A	1-1/4 "	R4133581	R4133582	R4166923	NR	-	-	-	-
N/A	1-1/8 "	R4133714	R4133715	R4166926	NR	-	-	-	-
N/A	1-1/4 "	R4133581	R4133582	R4166923	NR	-	-	-	-

MAKE MODEL YEAR AXLE CODE AXLE WEIGHT	AXLE & BRK. TYPE	BRK. MFG.	BRAKE SIZE	FMSI	MERITOR DISC PAD OR BRAKE SHOE	MERITOR GUIDE PIN OR RETURN SPRING KIT	MERITOR CALIPER HWD. KIT OR RETURN SPRING KIT	MERITOR ADJUSTER KIT (LEFT WHEEL)	MERITOR ADJUSTER KIT (RIGHT WHEEL)
ITE(Cont.)									
160, 1600, 1650 SERIES(Cont.)									
1981									
	Fm	WG	15 " x 3 "	1245A - 235	R700235	R40H521	R40H9201	R40H3524	R40H3524
M1600, M1652, M1654 Metro Series, Forward Control									
FA78, 81	Fa	WG	15 " x 3 "	1245C - 321	R700321	R40H521	R40H9237	R40H3502	R40H3503
M1600, M1652, M1654 Metro Series, Forward Control									
FA99	Fa	WG	15 " x 3 "	1245C - 321	R700321	R40H521	R40H9237	R40H3502	R40H3503
	Fm	WG	15 " x 3 "	1245A - 235	R700235	R40H521	R40H9201	R40H3524	R40H3524
M1600, M1652, M1654 Metro Series, Forward Control									
RA25, 126, 184	Ra	WG	15 " x 4 "	4645A - 376	Discontinued	R40H597	R40H9200	R40H3540	R40H3541
	Ra	WG	15 " x 5 "	1252 - 346	R700346	R40H597	R40H9200	R40H3540	R40H3541
	Rm	WG	15 " x 4 "	4645A - 376	Discontinued	R40H597	R40H9200	R40H3518	R404148
	Rm	WG	15 " x 5 "	1252 - 346	R700346	R40H597	R40H9200	R40H3518	R404148
M1600, M1652, M1654 Metro Series, Forward Control									
RA30, 39, 127, 187, 189	Ra	WG	15 " x 5 "	1252 - 346	R700346	R40H597	R40H9200	R40H3540	R40H3541
	Rm	WG	15 " x 5 "	1252 - 346	R700346	R40H597	R40H9200	R40H3518	R404148
M1600, M1652, M1654 Metro Series, Forward Control									
RA39	Ra	WG	15 " x 6 "	4596 - 381	R700381	R40H597	R40H9200	R40H3540	R40H3541
M1600, M1652, M1654 Metro Series, Forward Control									
RA39, 189	Ra	WG	16 " x 6 "	1255 - 386	N/A	R40H597	R40H9200	N/A	N/A
	Rm	WG	16 " x 6 "	1255 - 386	N/A	R40H597	R40H9200	R404149	R404150
M1600, M1652, M1654 Metro Series, Forward Control									
RA44	Ra	WG	15 " x 7 "	4597 - 383	R700383	R40H597	R40H9200	R40H3540	R40H3541
1980 M1600, M1652, M1654 Metro Series, Forward Control									
FA209	Fa	WG	15 " x 3 "	1245C - 321	R700321	R40H521	R40H9237	R40H3502	R40H3503
	Fm	WG	15 " x 3 "	1245A - 235	R700235	R40H521	R40H9201	R40H3524	R40H3524
M1600, M1652, M1654 Metro Series, Forward Control									
FA69	Fa	WG	14 " x 2-1/2 "	1294A - 325	N/A	R40H521	R40H9237	R40H3502	R40H3503
	Fm	WG	14 " x 2-1/2 "	1294 - 296	N/A	R40H521	R40H9201	R40H3524	R40H3524
M1600, M1652, M1654 Metro Series, Forward Control									
FA73, 101	Fa	WG	15 " x 3-1/2 "	1280B - 322	R464004	R40H521	R40H9237	R40H3502	R40H3503
	Fm	WG	15 " x 3-1/2 "	1280 - 463	R700463	R40H521	R40H9201	R40H3524	R40H3524
M1600, M1652, M1654 Metro Series, Forward Control									
FA73, 101, 109	Fa	WG	15 " x 3 "	1245C - 321	R700321	R40H521	R40H9237	R40H3502	R40H3503
	Fm	WG	15 " x 3 "	1245A - 235	R700235	R40H521	R40H9201	R40H3524	R40H3524
M1600, M1652, M1654 Metro Series, Forward Control									
FA74	Fa	WG	15 " x 3 "	1245C - 321	R700321	R40H521	R40H9237	R40H3502	R40H3503
	Fm	WG	15 " x 3 "	1245A - 235	R700235	R40H521	R40H9201	R40H3524	R40H3524
M1600, M1652, M1654 Metro Series, Forward Control									
FA78, 81	Fa	WG	15 " x 3 "	1245C - 321	R700321	R40H521	R40H9237	R40H3502	R40H3503

MERITOR DRUM OR ROTOR NO.	CALIPER OR CYLINDER BORE SIZE	MERITOR CALIPER OR WHEEL CYLINDER (LEFT)	MERITOR CALIPER OR WHEEL CYLINDER (RIGHT)	MERITOR CALIPER OR WHEEL CYLINDER REPAIR KIT	MERITOR CALIPER PISTON	MERITOR MASTER CYLINDER	MERITOR MASTER CYLINDER KIT	MERITOR BRAKE HOSE (LEFT)	MERITOR BRAKE HOSE (RIGHT)
ITE(Cont.)									
160, 1600, 1650 SERIES(Cont.)									
N/A	1-1/4 "	R4133581	R4133582	R4166923	NR	-	-	-	-
N/A	1-1/8 "	R4133320	R4133321	R4166926	NR	-	-	-	-
N/A	1-1/4 "	R4133581	R4133582	R4166923	NR	-	-	-	-
N/A	1-1/4 "	R4133581	R4133582	R4166923	NR	-	-	-	-
N/A	1-1/2 "	R4133580	R4133580	Discontinued	NR	-	-	-	-
N/A	1-5/8 "	R4133338	R4133338	R4166689	NR	-	-	-	-
N/A	1-1/2 "	R4133580	R4133580	Discontinued	NR	-	-	-	-
N/A	1-5/8 "	R4133338	R4133338	R4166689	NR	-	-	-	-
N/A	1-1/2 "	R4133580	R4133580	Discontinued	NR	-	-	-	-
N/A	1-1/2 "	R4133580	R4133580	Discontinued	NR	-	-	-	-
N/A	1-5/8 "	R4133338	R4133338	R4166689	NR	-	-	-	-
N/A	1-7/8 "	R4133584	R4133584	R4166897	NR	-	-	-	-
N/A	1-7/8 "	R4133584	R4133584	R4166897	NR	-	-	-	-
N/A	1-3/4 "	R4133400	R4133400	R4166917	NR	-	-	-	-
N/A	1-1/4 "	R4133581	R4133582	R4166923	NR	-	-	-	-
N/A	1-1/4 "	R4133581	R4133582	R4166923	NR	-	-	-	-
N/A	1-1/8 "	R4133714	R4133715	R4166926	NR	-	-	-	-
N/A	1-1/8 "	R4133714	R4133715	R4166926	NR	-	-	-	-
N/A	1-1/4 "	R4133581	R4133582	R4166923	NR	-	-	-	-
N/A	1-1/4 "	R4133581	R4133582	R4166923	NR	-	-	-	-
N/A	1-1/4 "	R4133581	R4133582	R4166923	NR	-	-	-	-
N/A	1-1/8 "	R4133714	R4133715	R4166926	NR	-	-	-	-
N/A	1-1/4 "	R4133581	R4133582	R4166923	NR	-	-	-	-
N/A	1-1/4 "	R4133581	R4133582	R4166923	NR	-	-	-	-
N/A	1-1/8 "	R4133320	R4133321	R4166926	NR	-	-	-	-

MAKE MODEL YEAR AXLE CODE AXLE WEIGHT	AXLE & BRK. TYPE	BRK. MFG.	BRAKE SIZE	FMSI	MERITOR DISC PAD OR BRAKE SHOE	MERITOR GUIDE PIN OR RETURN SPRING KIT	MERITOR CALIPER HWD. KIT OR RETURN SPRING KIT	MERITOR ADJUSTER KIT (LEFT WHEEL)	MERITOR ADJUSTER KIT (RIGHT WHEEL)
ITE(Cont.)									
160, 1600, 1650 SERIES(Cont.)									
1980 M1600, M1652, M1654 Metro Series, Forward Control FA99	Fa	WG	15 " x 3 "	1245C - 321	R700321	R40H521	R40H9237	R40H3502	R40H3503
	Fm	WG	15 " x 3 "	1245A - 235	R700235	R40H521	R40H9201	R40H3524	R40H3524
M1600, M1652, M1654 Metro Series, Forward Control RA25, 126, 184	Ra	WG	15 " x 4 "	4645A - 376	Discontinued	R40H597	R40H9200	R40H3540	R40H3541
	Ra	WG	15 " x 5 "	1252 - 346	R700346	R40H597	R40H9200	R40H3540	R40H3541
	Rm	WG	15 " x 4 "	4645A - 376	Discontinued	R40H597	R40H9200	R40H3518	R404148
	Rm	WG	15 " x 5 "	1252 - 346	R700346	R40H597	R40H9200	R40H3518	R404148
M1600, M1652, M1654 Metro Series, Forward Control RA30, 39, 127, 187, 189	Ra	WG	15 " x 5 "	1252 - 346	R700346	R40H597	R40H9200	R40H3540	R40H3541
	Rm	WG	15 " x 5 "	1252 - 346	R700346	R40H597	R40H9200	R40H3518	R404148
M1600, M1652, M1654 Metro Series, Forward Control RA39	Ra	WG	15 " x 6 "	4596 - 381	R700381	R40H597	R40H9200	R40H3540	R40H3541
M1600, M1652, M1654 Metro Series, Forward Control RA39, 189	Ra	WG	16 " x 6 "	1255 - 386	N/A	R40H597	R40H9200	N/A	N/A
	Rm	WG	16 " x 6 "	1255 - 386	N/A	R40H597	R40H9200	R404149	R404150
M1600, M1652, M1654 Metro Series, Forward Control RA44	Ra	WG	15 " x 7 "	4597 - 383	R700383	R40H597	R40H9200	R40H3540	R40H3541
1979 M1600, M1652, M1654 Metro Series, Forward Control FA209	Fa	WG	15 " x 3 "	1245C - 321	R700321	R40H521	R40H9237	R40H3502	R40H3503
	Fm	WG	15 " x 3 "	1245A - 235	R700235	R40H521	R40H9201	R40H3524	R40H3524
M1600, M1652, M1654 Metro Series, Forward Control FA69	Fa	WG	14 " x 2-1/2 "	1294A - 325	N/A	R40H521	R40H9237	R40H3502	R40H3503
	Fm	WG	14 " x 2-1/2 "	1294 - 296	N/A	R40H521	R40H9201	R40H3524	R40H3524
M1600, M1652, M1654 Metro Series, Forward Control FA73, 101	Fa	WG	15 " x 3-1/2 "	1280B - 322	R464004	R40H521	R40H9237	R40H3502	R40H3503
	Fm	WG	15 " x 3-1/2 "	1280 - 463	R700463	R40H521	R40H9201	R40H3524	R40H3524
M1600, M1652, M1654 Metro Series, Forward Control FA73, 101, 109	Fa	WG	15 " x 3 "	1245C - 321	R700321	R40H521	R40H9237	R40H3502	R40H3503
	Fm	WG	15 " x 3 "	1245A - 235	R700235	R40H521	R40H9201	R40H3524	R40H3524
M1600, M1652, M1654 Metro Series, Forward Control FA74	Fa	WG	15 " x 3 "	1245C - 321	R700321	R40H521	R40H9237	R40H3502	R40H3503
	Fm	WG	15 " x 3 "	1245A - 235	R700235	R40H521	R40H9201	R40H3524	R40H3524
M1600, M1652, M1654 Metro Series, Forward Control FA78, 81	Fa	WG	15 " x 3 "	1245C - 321	R700321	R40H521	R40H9237	R40H3502	R40H3503
M1600, M1652, M1654 Metro Series, Forward Control FA99	Fa	WG	15 " x 3 "	1245C - 321	R700321	R40H521	R40H9237	R40H3502	R40H3503

MERITOR DRUM OR ROTOR NO.	CALIPER OR CYLINDER BORE SIZE	MERITOR CALIPER OR WHEEL CYLINDER (LEFT)	MERITOR CALIPER OR WHEEL CYLINDER (RIGHT)	MERITOR CALIPER OR WHEEL CYLINDER REPAIR KIT	MERITOR CALIPER PISTON	MERITOR MASTER CYLINDER	MERITOR MASTER CYLINDER KIT	MERITOR BRAKE HOSE (LEFT)	MERITOR BRAKE HOSE (RIGHT)
ITE(Cont.)									
160, 1600, 1650 SERIES(Cont.)									
N/A	1-1/4 "	R4133581	R4133582	R4166923	NR	-	-	-	-
N/A	1-1/4 "	R4133581	R4133582	R4166923	NR	-	-	-	-
N/A	1-1/2 "	R4133580	R4133580	Discontinued	NR	-	-	-	-
N/A	1-5/8 "	R4133338	R4133338	R4166689	NR	-	-	-	-
N/A	1-1/2 "	R4133580	R4133580	Discontinued	NR	-	-	-	-
N/A	1-5/8 "	R4133338	R4133338	R4166689	NR	-	-	-	-
N/A	1-1/2 "	R4133580	R4133580	Discontinued	NR	-	-	-	-
N/A	1-1/2 "	R4133580	R4133580	Discontinued	NR	-	-	-	-
N/A	1-5/8 "	R4133338	R4133338	R4166689	NR	-	-	-	-
N/A	1-7/8 "	R4133584	R4133584	R4166897	NR	-	-	-	-
N/A	1-7/8 "	R4133584	R4133584	R4166897	NR	-	-	-	-
N/A	1-3/4 "	R4133400	R4133400	R4166917	NR	-	-	-	-
N/A	1-1/4 "	R4133581	R4133582	R4166923	NR	-	-	-	-
N/A	1-1/4 "	R4133581	R4133582	R4166923	NR	-	-	-	-
N/A	1-1/8 "	R4133714	R4133715	R4166926	NR	-	-	-	-
N/A	1-1/8 "	R4133714	R4133715	R4166926	NR	-	-	-	-
N/A	1-1/4 "	R4133581	R4133582	R4166923	NR	-	-	-	-
N/A	1-1/4 "	R4133581	R4133582	R4166923	NR	-	-	-	-
N/A	1-1/4 "	R4133581	R4133582	R4166923	NR	-	-	-	-
N/A	1-1/8 "	R4133714	R4133715	R4166926	NR	-	-	-	-
N/A	1-1/4 "	R4133581	R4133582	R4166923	NR	-	-	-	-
N/A	1-1/4 "	R4133581	R4133582	R4166923	NR	-	-	-	-
N/A	1-1/8 "	R4133320	R4133321	R4166926	NR	-	-	-	-
N/A	1-1/4 "	R4133581	R4133582	R4166923	NR	-	-	-	-

MAKE MODEL YEAR AXLE CODE AXLE WEIGHT	AXLE & BRK. TYPE	BRK. MFG.	BRAKE SIZE	FMSI	MERITOR DISC PAD OR BRAKE SHOE	MERITOR GUIDE PIN OR RETURN SPRING KIT	MERITOR CALIPER HWD. KIT OR RETURN SPRING KIT	MERITOR ADJUSTER KIT (LEFT WHEEL)	MERITOR ADJUSTER KIT (RIGHT WHEEL)
ITE(Cont.)									
160, 1600, 1650 SERIES(Cont.)									
1979 M1600, M1652, M1654 Metro Series, Forward Control FA99	Fm	WG	15 " x 3 "	1245A - 235	R700235	R40H521	R40H9201	R40H3524	R40H3524
M1600, M1652, M1654 Metro Series, Forward Control RA25, 126, 184	Ra	WG	15 " x 4 "	4645A - 376	Discontinued	R40H597	R40H9200	R40H3540	R40H3541
	Ra	WG	15 " x 5 "	1252 - 346	R700346	R40H597	R40H9200	R40H3540	R40H3541
	Rm	WG	15 " x 4 "	4645A - 376	Discontinued	R40H597	R40H9200	R40H3518	R404148
	Rm	WG	15 " x 5 "	1252 - 346	R700346	R40H597	R40H9200	R40H3518	R404148
M1600, M1652, M1654 Metro Series, Forward Control RA30, 39, 127, 187, 189	Ra	WG	15 " x 5 "	1252 - 346	R700346	R40H597	R40H9200	R40H3540	R40H3541
	Rm	WG	15 " x 5 "	1252 - 346	R700346	R40H597	R40H9200	R40H3518	R404148
M1600, M1652, M1654 Metro Series, Forward Control RA39	Ra	WG	15 " x 6 "	4596 - 381	R700381	R40H597	R40H9200	R40H3540	R40H3541
M1600, M1652, M1654 Metro Series, Forward Control RA39, 189	Ra	WG	16 " x 6 "	1255 - 386	N/A	R40H597	R40H9200	N/A	N/A
	Rm	WG	16 " x 6 "	1255 - 386	N/A	R40H597	R40H9200	R404149	R404150
M1600, M1652, M1654 Metro Series, Forward Control RA44	Ra	WG	15 " x 7 "	4597 - 383	R700383	R40H597	R40H9200	R40H3540	R40H3541
1978 M1600, M1652, M1654 Metro Series, Forward Control FA209	Fa	WG	15 " x 3 "	1245C - 321	R700321	R40H521	R40H9237	R40H3502	R40H3503
	Fm	WG	15 " x 3 "	1245A - 235	R700235	R40H521	R40H9201	R40H3524	R40H3524
M1600, M1652, M1654 Metro Series, Forward Control FA69	Fa	WG	14 " x 2-1/2 "	1294A - 325	N/A	R40H521	R40H9237	R40H3502	R40H3503
	Fm	WG	14 " x 2-1/2 "	1294 - 296	N/A	R40H521	R40H9201	R40H3524	R40H3524
M1600, M1652, M1654 Metro Series, Forward Control FA73, 101	Fa	WG	15 " x 3-1/2 "	1280B - 322	R464004	R40H521	R40H9237	R40H3502	R40H3503
	Fm	WG	15 " x 3-1/2 "	1280 - 463	R700463	R40H521	R40H9201	R40H3524	R40H3524
M1600, M1652, M1654 Metro Series, Forward Control FA73, 101, 109	Fa	WG	15 " x 3 "	1245C - 321	R700321	R40H521	R40H9237	R40H3502	R40H3503
	Fm	WG	15 " x 3 "	1245A - 235	R700235	R40H521	R40H9201	R40H3524	R40H3524
M1600, M1652, M1654 Metro Series, Forward Control FA74	Fa	WG	15 " x 3 "	1245C - 321	R700321	R40H521	R40H9237	R40H3502	R40H3503
	Fm	WG	15 " x 3 "	1245A - 235	R700235	R40H521	R40H9201	R40H3524	R40H3524
M1600, M1652, M1654 Metro Series, Forward Control FA78, 81	Fa	WG	15 " x 3 "	1245C - 321	R700321	R40H521	R40H9237	R40H3502	R40H3503
M1600, M1652, M1654 Metro Series, Forward Control FA99	Fa	WG	15 " x 3 "	1245C - 321	R700321	R40H521	R40H9237	R40H3502	R40H3503

MERITOR DRUM OR ROTOR NO.	CALIPER OR CYLINDER BORE SIZE	MERITOR CALIPER OR WHEEL CYLINDER (LEFT)	MERITOR CALIPER OR WHEEL CYLINDER (RIGHT)	MERITOR CALIPER OR WHEEL CYLINDER REPAIR KIT	MERITOR CALIPER PISTON	MERITOR MASTER CYLINDER	MERITOR MASTER CYLINDER KIT	MERITOR BRAKE HOSE (LEFT)	MERITOR BRAKE HOSE (RIGHT)
									ITE(Cont.)
									160, 1600, 1650 SERIES(Cont.)
N/A	1-1/4 "	R4133581	R4133582	R4166923	NR	-	-	-	-
N/A	1-1/2 "	R4133580	R4133580	Discontinued	NR	-	-	-	-
N/A	1-5/8 "	R4133338	R4133338	R4166689	NR	-	-	-	-
N/A	1-1/2 "	R4133580	R4133580	Discontinued	NR	-	-	-	-
N/A	1-5/8 "	R4133338	R4133338	R4166689	NR	-	-	-	-
N/A	1-1/2 "	R4133580	R4133580	Discontinued	NR	-	-	-	-
N/A	1-1/2 "	R4133580	R4133580	Discontinued	NR	-	-	-	-
N/A	1-5/8 "	R4133338	R4133338	R4166689	NR	-	-	-	-
N/A	1-7/8 "	R4133584	R4133584	R4166897	NR	-	-	-	-
N/A	1-7/8 "	R4133584	R4133584	R4166897	NR	-	-	-	-
N/A	1-3/4 "	R4133400	R4133400	R4166917	NR	-	-	-	-
N/A	1-1/4 "	R4133581	R4133582	R4166923	NR	-	-	-	-
N/A	1-1/4 "	R4133581	R4133582	R4166923	NR	-	-	-	-
N/A	1-1/8 "	R4133714	R4133715	R4166926	NR	-	-	-	-
N/A	1-1/8 "	R4133714	R4133715	R4166926	NR	-	-	-	-
N/A	1-1/4 "	R4133581	R4133582	R4166923	NR	-	-	-	-
N/A	1-1/4 "	R4133581	R4133582	R4166923	NR	-	-	-	-
N/A	1-1/4 "	R4133581	R4133582	R4166923	NR	-	-	-	-
N/A	1-1/8 "	R4133714	R4133715	R4166926	NR	-	-	-	-
N/A	1-1/4 "	R4133581	R4133582	R4166923	NR	-	-	-	-
N/A	1-1/4 "	R4133581	R4133582	R4166923	NR	-	-	-	-
N/A	1-1/8 "	R4133320	R4133321	R4166926	NR	-	-	-	-
N/A	1-1/4 "	R4133581	R4133582	R4166923	NR	-	-	-	-

MAKE MODEL YEAR AXLE CODE AXLE WEIGHT	AXLE & BRK. TYPE	BRK. MFG.	BRAKE SIZE	FMSI	MERITOR DISC PAD OR BRAKE SHOE	MERITOR GUIDE PIN OR RETURN SPRING KIT	MERITOR CALIPER HWD. KIT OR RETURN SPRING KIT	MERITOR ADJUSTER KIT (LEFT WHEEL)	MERITOR ADJUSTER KIT (RIGHT WHEEL)
ITE(Cont.)									
160, 1600, 1650 SERIES(Cont.)									
1978									
	Fm	WG	15 " x 3 "	1245A - 235	R700235	R40H521	R40H9201	R40H3524	R40H3524
M1600, M1652, M1654 Metro Series, Forward Control									
RA25, 126, 184	Ra	WG	15 " x 4 "	4645A - 376	Discontinued	R40H597	R40H9200	R40H3540	R40H3541
	Ra	WG	15 " x 5 "	1252 - 346	R700346	R40H597	R40H9200	R40H3540	R40H3541
	Rm	WG	15 " x 4 "	4645A - 376	Discontinued	R40H597	R40H9200	R40H3518	R404148
	Rm	WG	15 " x 5 "	1252 - 346	R700346	R40H597	R40H9200	R40H3518	R404148
M1600, M1652, M1654 Metro Series, Forward Control									
RA30, 39, 127, 187, 189	Ra	WG	15 " x 5 "	1252 - 346	R700346	R40H597	R40H9200	R40H3540	R40H3541
	Rm	WG	15 " x 5 "	1252 - 346	R700346	R40H597	R40H9200	R40H3518	R404148
M1600, M1652, M1654 Metro Series, Forward Control									
RA39	Ra	WG	15 " x 6 "	4596 - 381	R700381	R40H597	R40H9200	R40H3540	R40H3541
M1600, M1652, M1654 Metro Series, Forward Control									
RA39, 189	Ra	WG	16 " x 6 "	1255 - 386	N/A	R40H597	R40H9200	N/A	N/A
	Rm	WG	16 " x 6 "	1255 - 386	N/A	R40H597	R40H9200	R404149	R404150
M1600, M1652, M1654 Metro Series, Forward Control									
RA44	Ra	WG	15 " x 7 "	4597 - 383	R700383	R40H597	R40H9200	R40H3540	R40H3541
1977									
M1600, M1652, M1654 Metro Series, Forward Control									
FA209	Fa	WG	15 " x 3 "	1245C - 321	R700321	R40H521	R40H9237	R40H3502	R40H3503
	Fm	WG	15 " x 3 "	1245A - 235	R700235	R40H521	R40H9201	R40H3524	R40H3524
M1600, M1652, M1654 Metro Series, Forward Control									
FA69	Fa	WG	14 " x 2-1/2 "	1294A - 325	N/A	R40H521	R40H9237	R40H3502	R40H3503
	Fm	WG	14 " x 2-1/2 "	1294 - 296	N/A	R40H521	R40H9201	R40H3524	R40H3524
M1600, M1652, M1654 Metro Series, Forward Control									
FA73, 101	Fa	WG	15 " x 3-1/2 "	1280B - 322	R464004	R40H521	R40H9237	R40H3502	R40H3503
	Fm	WG	15 " x 3-1/2 "	1280 - 463	R700463	R40H521	R40H9201	R40H3524	R40H3524
M1600, M1652, M1654 Metro Series, Forward Control									
FA73, 101, 109	Fa	WG	15 " x 3 "	1245C - 321	R700321	R40H521	R40H9237	R40H3502	R40H3503
	Fm	WG	15 " x 3 "	1245A - 235	R700235	R40H521	R40H9201	R40H3524	R40H3524
M1600, M1652, M1654 Metro Series, Forward Control									
FA74	Fa	WG	15 " x 3 "	1245C - 321	R700321	R40H521	R40H9237	R40H3502	R40H3503
	Fm	WG	15 " x 3 "	1245A - 235	R700235	R40H521	R40H9201	R40H3524	R40H3524
M1600, M1652, M1654 Metro Series, Forward Control									
FA78, 81	Fa	WG	15 " x 3 "	1245C - 321	R700321	R40H521	R40H9237	R40H3502	R40H3503
M1600, M1652, M1654 Metro Series, Forward Control									
FA99	Fa	WG	15 " x 3 "	1245C - 321	R700321	R40H521	R40H9237	R40H3502	R40H3503
	Fm	WG	15 " x 3 "	1245A - 235	R700235	R40H521	R40H9201	R40H3524	R40H3524
M1600, M1652, M1654 Metro Series, Forward Control									
RA25, 126, 184	Ra	WG	15 " x 4 "	4645A - 376	Discontinued	R40H597	R40H9200	R40H3540	R40H3541

MERITOR DRUM OR ROTOR NO.	CALIPER OR CYLINDER BORE SIZE	MERITOR CALIPER OR WHEEL CYLINDER (LEFT)	MERITOR CALIPER OR WHEEL CYLINDER (RIGHT)	MERITOR CALIPER OR WHEEL CYLINDER REPAIR KIT	MERITOR CALIPER PISTON	MERITOR MASTER CYLINDER	MERITOR MASTER CYLINDER KIT	MERITOR BRAKE HOSE (LEFT)	MERITOR BRAKE HOSE (RIGHT)
ITE(Cont.)									
160, 1600, 1650 SERIES(Cont.)									
N/A	1-1/4 "	R4133581	R4133582	R4166923	NR	-	-	-	-
N/A	1-1/2 "	R4133580	R4133580	Discontinued	NR	-	-	-	-
N/A	1-5/8 "	R4133338	R4133338	R4166689	NR	-	-	-	-
N/A	1-1/2 "	R4133580	R4133580	Discontinued	NR	-	-	-	-
N/A	1-5/8 "	R4133338	R4133338	R4166689	NR	-	-	-	-
N/A	1-1/2 "	R4133580	R4133580	Discontinued	NR	-	-	-	-
N/A	1-1/2 "	R4133580	R4133580	Discontinued	NR	-	-	-	-
N/A	1-5/8 "	R4133338	R4133338	R4166689	NR	-	-	-	-
N/A	1-7/8 "	R4133584	R4133584	R4166897	NR	-	-	-	-
N/A	1-7/8 "	R4133584	R4133584	R4166897	NR	-	-	-	-
N/A	1-3/4 "	R4133400	R4133400	R4166917	NR	-	-	-	-
-	1-1/4 "	R4133581	R4133582	R4166923	NR	-	-	-	-
-	1-1/4 "	R4133581	R4133582	R4166923	NR	-	-	-	-
-	1-1/8 "	R4133714	R4133715	R4166926	NR	-	-	-	-
-	1-1/8 "	R4133714	R4133715	R4166926	NR	-	-	-	-
-	1-1/4 "	R4133581	R4133582	R4166923	NR	-	-	-	-
-	1-1/4 "	R4133581	R4133582	R4166923	NR	-	-	-	-
-	1-1/4 "	R4133581	R4133582	R4166923	NR	-	-	-	-
-	1-1/8 "	R4133714	R4133715	R4166926	NR	-	-	-	-
-	1-1/4 "	R4133581	R4133582	R4166923	NR	-	-	-	-
-	1-1/4 "	R4133581	R4133582	R4166923	NR	-	-	-	-
-	1-1/8 "	R4133320	R4133321	R4166926	NR	-	-	-	-
-	1-1/4 "	R4133581	R4133582	R4166923	NR	-	-	-	-
-	1-1/4 "	R4133581	R4133582	R4166923	NR	-	-	-	-
-	1-1/2 "	R4133580	R4133580	Discontinued	NR	-	-	-	-

MAKE MODEL YEAR AXLE CODE AXLE WEIGHT	AXLE & BRK. TYPE	BRK. MFG.	BRAKE SIZE	FMSI	MERITOR DISC PAD OR BRAKE SHOE	MERITOR GUIDE PIN OR RETURN SPRING KIT	MERITOR CALIPER HWD. KIT OR RETURN SPRING KIT	MERITOR ADJUSTER KIT (LEFT WHEEL)	MERITOR ADJUSTER KIT (RIGHT WHEEL)
ITE(Cont.)									
160, 1600, 1650 SERIES(Cont.)									
1977									
	Ra	WG	15 " x 5 "	1252 - 346	R700346	R40H597	R40H9200	R40H3540	R40H3541
	Rm	WG	15 " x 4 "	4645A - 376	Discontinued	R40H597	R40H9200	R40H3518	R404148
	Rm	WG	15 " x 5 "	1252 - 346	R700346	R40H597	R40H9200	R40H3518	R404148
M1600, M1652, M1654 Metro Series, Forward Control									
RA30, 39, 127, 187, 189	Ra	WG	15 " x 5 "	1252 - 346	R700346	R40H597	R40H9200	R40H3540	R40H3541
	Rm	WG	15 " x 5 "	1252 - 346	R700346	R40H597	R40H9200	R40H3518	R404148
M1600, M1652, M1654 Metro Series, Forward Control									
RA39	Ra	WG	15 " x 6 "	4596 - 381	R700381	R40H597	R40H9200	R40H3540	R40H3541
M1600, M1652, M1654 Metro Series, Forward Control									
RA39, 189	Ra	WG	16 " x 6 "	1255 - 386	N/A	R40H597	R40H9200	NLA	NLA
	Rm	WG	16 " x 6 "	1255 - 386	N/A	R40H597	R40H9200	R404149	R404150
M1600, M1652, M1654 Metro Series, Forward Control									
RA44	Ra	WG	15 " x 7 "	4597 - 383	R700383	R40H597	R40H9200	R40H3540	R40H3541
1976									
M1600, M1652, M1654 Metro Series, Forward Control									
FA209	Fa	WG	15 " x 3 "	1245C - 321	R700321	R40H521	R40H9237	R40H3502	R40H3503
	Fm	WG	15 " x 3 "	1245A - 235	R700235	R40H521	R40H9201	R40H3524	R40H3524
M1600, M1652, M1654 Metro Series, Forward Control									
FA69	Fa	WG	14 " x 2-1/2 "	1294A - 325	N/A	R40H521	R40H9237	R40H3502	R40H3503
	Fm	WG	14 " x 2-1/2 "	1294 - 296	N/A	R40H521	R40H9201	R40H3524	R40H3524
M1600, M1652, M1654 Metro Series, Forward Control									
FA73, 101	Fa	WG	15 " x 3-1/2 "	1280B - 322	R464004	R40H521	R40H9237	R40H3502	R40H3503
	Fm	WG	15 " x 3-1/2 "	1280 - 463	R700463	R40H521	R40H9201	R40H3524	R40H3524
M1600, M1652, M1654 Metro Series, Forward Control									
FA73, 101, 109	Fa	WG	15 " x 3 "	1245C - 321	R700321	R40H521	R40H9237	R40H3502	R40H3503
	Fm	WG	15 " x 3 "	1245A - 235	R700235	R40H521	R40H9201	R40H3524	R40H3524
M1600, M1652, M1654 Metro Series, Forward Control									
FA74	Fa	WG	15 " x 3 "	1245C - 321	R700321	R40H521	R40H9237	R40H3502	R40H3503
	Fm	WG	15 " x 3 "	1245A - 235	R700235	R40H521	R40H9201	R40H3524	R40H3524
M1600, M1652, M1654 Metro Series, Forward Control									
FA78, 81	Fa	WG	15 " x 3 "	1245C - 321	R700321	R40H521	R40H9237	R40H3502	R40H3503
M1600, M1652, M1654 Metro Series, Forward Control									
FA99	Fa	WG	15 " x 3 "	1245C - 321	R700321	R40H521	R40H9237	R40H3502	R40H3503
	Fm	WG	15 " x 3 "	1245A - 235	R700235	R40H521	R40H9201	R40H3524	R40H3524
M1600, M1652, M1654 Metro Series, Forward Control									
RA25, 126, 184	Ra	WG	15 " x 4 "	4645A - 376	Discontinued	R40H597	R40H9200	R40H3540	R40H3541
	Ra	WG	15 " x 5 "	1252 - 346	R700346	R40H597	R40H9200	R40H3540	R40H3541
	Rm	WG	15 " x 4 "	4645A - 376	Discontinued	R40H597	R40H9200	R40H3518	R404148
	Rm	WG	15 " x 5 "	1252 - 346	R700346	R40H597	R40H9200	R40H3518	R404148

MERITOR DRUM OR ROTOR NO.	CALIPER OR CYLINDER BORE SIZE	MERITOR CALIPER OR WHEEL CYLINDER (LEFT)	MERITOR CALIPER OR WHEEL CYLINDER (RIGHT)	MERITOR CALIPER OR WHEEL CYLINDER REPAIR KIT	MERITOR CALIPER PISTON	MERITOR MASTER CYLINDER	MERITOR MASTER CYLINDER KIT	MERITOR BRAKE HOSE (LEFT)	MERITOR BRAKE HOSE (RIGHT)
ITE(Cont.)									
160, 1600, 1650 SERIES(Cont.)									
-	1-5/8 "	R4133338	R4133338	R4166689	NR	-	-	-	-
-	1-1/2 "	R4133580	R4133580	Discontinued	NR	-	-	-	-
-	1-5/8 "	R4133338	R4133338	R4166689	NR	-	-	-	-
-	1-1/2 "	R4133580	R4133580	Discontinued	NR	-	-	-	-
-	1-1/2 "	R4133580	R4133580	Discontinued	NR	-	-	-	-
-	1-5/8 "	R4133338	R4133338	R4166689	NR	-	-	-	-
-	1-7/8 "	R4133584	R4133584	R4166897	NR	-	-	-	-
-	1-7/8 "	R4133584	R4133584	R4166897	NR	-	-	-	-
-	1-3/4 "	R4133400	R4133400	R4166917	NR	-	-	-	-
-	1-1/4 "	R4133581	R4133582	R4166923	NR	-	-	-	-
-	1-1/4 "	R4133581	R4133582	R4166923	NR	-	-	-	-
-	1-1/8 "	R4133714	R4133715	R4166926	NR	-	-	-	-
-	1-1/8 "	R4133714	R4133715	R4166926	NR	-	-	-	-
-	1-1/4 "	R4133581	R4133582	R4166923	NR	-	-	-	-
-	1-1/4 "	R4133581	R4133582	R4166923	NR	-	-	-	-
-	1-1/4 "	R4133581	R4133582	R4166923	NR	-	-	-	-
-	1-1/8 "	R4133714	R4133715	R4166926	NR	-	-	-	-
-	1-1/4 "	R4133581	R4133582	R4166923	NR	-	-	-	-
-	1-1/4 "	R4133581	R4133582	R4166923	NR	-	-	-	-
-	1-1/8 "	R4133320	R4133321	R4166926	NR	-	-	-	-
-	1-1/4 "	R4133581	R4133582	R4166923	NR	-	-	-	-
-	1-1/4 "	R4133581	R4133582	R4166923	NR	-	-	-	-
-	1-1/2 "	R4133580	R4133580	Discontinued	NR	-	-	-	-
-	1-5/8 "	R4133338	R4133338	R4166689	NR	-	-	-	-
-	1-1/2 "	R4133580	R4133580	Discontinued	NR	-	-	-	-
-	1-5/8 "	R4133338	R4133338	R4166689	NR	-	-	-	-

MAKE MODEL YEAR AXLE CODE AXLE WEIGHT	AXLE & BRK. TYPE	BRK. MFG.	BRAKE SIZE	FMSI	MERITOR DISC PAD OR BRAKE SHOE	MERITOR GUIDE PIN OR RETURN SPRING KIT	MERITOR CALIPER HWD. KIT OR RETURN SPRING KIT	MERITOR ADJUSTER KIT (LEFT WHEEL)	MERITOR ADJUSTER KIT (RIGHT WHEEL)
ITE(Cont.)									
160, 1600, 1650 SERIES(Cont.)									
1976 M1600, M1652, M1654 Metro Series, Forward Control RA30, 39, 127, 187, 189	Ra	WG	15 " x 5 "	1252 - 346	R700346	R40H597	R40H9200	R40H3540	R40H3541
	Rm	WG	15 " x 5 "	1252 - 346	R700346	R40H597	R40H9200	R40H3518	R404148
M1600, M1652, M1654 Metro Series, Forward Control RA39	Ra	WG	15 " x 6 "	4596 - 381	R700381	R40H597	R40H9200	R40H3540	R40H3541
M1600, M1652, M1654 Metro Series, Forward Control RA39, 189	Ra	WG	16 " x 6 "	1255 - 386	N/A	R40H597	R40H9200	NLA	NLA
	Rm	WG	16 " x 6 "	1255 - 386	N/A	R40H597	R40H9200	R404149	R404150
M1600, M1652, M1654 Metro Series, Forward Control RA44	Ra	WG	15 " x 7 "	4597 - 383	R700383	R40H597	R40H9200	R40H3540	R40H3541
1975 M1600, M1652, M1654 Metro Series, Forward Control FA209	Fa	WG	15 " x 3 "	1245C - 321	R700321	R40H521	R40H9237	R40H3502	R40H3503
	Fm	WG	15 " x 3 "	1245A - 235	R700235	R40H521	R40H9201	R40H3524	R40H3524
M1600, M1652, M1654 Metro Series, Forward Control FA69	Fa	WG	14 " x 2-1/2 "	1294A - 325	N/A	R40H521	R40H9237	R40H3502	R40H3503
	Fm	WG	14 " x 2-1/2 "	1294 - 296	N/A	R40H521	R40H9201	R40H3524	R40H3524
M1600, M1652, M1654 Metro Series, Forward Control FA73, 101	Fa	WG	15 " x 3-1/2 "	1280B - 322	R464004	R40H521	R40H9237	R40H3502	R40H3503
	Fm	WG	15 " x 3-1/2 "	1280 - 463	R700463	R40H521	R40H9201	R40H3524	R40H3524
M1600, M1652, M1654 Metro Series, Forward Control FA73, 101, 109	Fa	WG	15 " x 3 "	1245C - 321	R700321	R40H521	R40H9237	R40H3502	R40H3503
	Fm	WG	15 " x 3 "	1245A - 235	R700235	R40H521	R40H9201	R40H3524	R40H3524
M1600, M1652, M1654 Metro Series, Forward Control FA74	Fa	WG	15 " x 3 "	1245C - 321	R700321	R40H521	R40H9237	R40H3502	R40H3503
	Fm	WG	15 " x 3 "	1245A - 235	R700235	R40H521	R40H9201	R40H3524	R40H3524
M1600, M1652, M1654 Metro Series, Forward Control FA78, 81	Fa	WG	15 " x 3 "	1245C - 321	R700321	R40H521	R40H9237	R40H3502	R40H3503
M1600, M1652, M1654 Metro Series, Forward Control FA99	Fa	WG	15 " x 3 "	1245C - 321	R700321	R40H521	R40H9237	R40H3502	R40H3503
	Fm	WG	15 " x 3 "	1245A - 235	R700235	R40H521	R40H9201	R40H3524	R40H3524
M1600, M1652, M1654 Metro Series, Forward Control RA25, 126, 184	Ra	WG	15 " x 4 "	4645A - 376	Discontinued	R40H597	R40H9200	R40H3540	R40H3541
	Ra	WG	15 " x 5 "	1252 - 346	R700346	R40H597	R40H9200	R40H3540	R40H3541
	Rm	WG	15 " x 4 "	4645A - 376	Discontinued	R40H597	R40H9200	R40H3518	R404148
	Rm	WG	15 " x 5 "	1252 - 346	R700346	R40H597	R40H9200	R40H3518	R404148
M1600, M1652, M1654 Metro Series, Forward Control RA30, 39, 127, 187, 189	Ra	WG	15 " x 5 "	1252 - 346	R700346	R40H597	R40H9200	R40H3540	R40H3541

MERITOR DRUM OR ROTOR NO.	CALIPER OR CYLINDER BORE SIZE	MERITOR CALIPER OR WHEEL CYLINDER (LEFT)	MERITOR CALIPER OR WHEEL CYLINDER (RIGHT)	MERITOR CALIPER OR WHEEL CYLINDER REPAIR KIT	MERITOR CALIPER PISTON	MERITOR MASTER CYLINDER	MERITOR MASTER CYLINDER KIT	MERITOR BRAKE HOSE (LEFT)	MERITOR BRAKE HOSE (RIGHT)
									ITE(Cont.)
									160, 1600, 1650 SERIES(Cont.)
-	1-1/2 "	R4133580	R4133580	Discontinued	NR	-	-	-	-
-	1-1/2 "	R4133580	R4133580	Discontinued	NR	-	-	-	-
-	1-5/8 "	R4133338	R4133338	R4166689	NR	-	-	-	-
-	1-7/8 "	R4133584	R4133584	R4166897	NR	-	-	-	-
-	1-7/8 "	R4133584	R4133584	R4166897	NR	-	-	-	-
-	1-3/4 "	R4133400	R4133400	R4166917	NR	-	-	-	-
-	1-1/4 "	R4133581	R4133582	R4166923	NR	-	-	-	-
-	1-1/4 "	R4133581	R4133582	R4166923	NR	-	-	-	-
-	1-1/8 "	R4133714	R4133715	R4166926	NR	-	-	-	-
-	1-1/8 "	R4133714	R4133715	R4166926	NR	-	-	-	-
-	1-1/4 "	R4133581	R4133582	R4166923	NR	-	-	-	-
-	1-1/4 "	R4133581	R4133582	R4166923	NR	-	-	-	-
-	1-1/4 "	R4133581	R4133582	R4166923	NR	-	-	-	-
-	1-1/8 "	R4133714	R4133715	R4166926	NR	-	-	-	-
-	1-1/4 "	R4133581	R4133582	R4166923	NR	-	-	-	-
-	1-1/4 "	R4133581	R4133582	R4166923	NR	-	-	-	-
-	1-1/8 "	R4133320	R4133321	R4166926	NR	-	-	-	-
-	1-1/4 "	R4133581	R4133582	R4166923	NR	-	-	-	-
-	1-1/4 "	R4133581	R4133582	R4166923	NR	-	-	-	-
-	1-1/2 "	R4133580	R4133580	Discontinued	NR	-	-	-	-
-	1-5/8 "	R4133338	R4133338	R4166689	NR	-	-	-	-
-	1-1/2 "	R4133580	R4133580	Discontinued	NR	-	-	-	-
-	1-5/8 "	R4133338	R4133338	R4166689	NR	-	-	-	-
-	1-1/2 "	R4133580	R4133580	Discontinued	NR	-	-	-	-

MAKE MODEL YEAR AXLE CODE AXLE WEIGHT	AXLE & BRK. TYPE	BRK. MFG.	BRAKE SIZE	FMSI	MERITOR DISC PAD OR BRAKE SHOE	MERITOR GUIDE PIN OR RETURN SPRING KIT	MERITOR CALIPER HWD. KIT OR RETURN SPRING KIT	MERITOR ADJUSTER KIT (LEFT WHEEL)	MERITOR ADJUSTER KIT (RIGHT WHEEL)
ITE(Cont.)									
160, 1600, 1650 SERIES(Cont.)									
1975									
	Rm	WG	15 " x 5 "	1252 - 346	R700346	R40H597	R40H9200	R40H3518	R404148
M1600, M1652, M1654 Metro Series, Forward Control									
RA39	Ra	WG	15 " x 6 "	4596 - 381	R700381	R40H597	R40H9200	R40H3540	R40H3541
M1600, M1652, M1654 Metro Series, Forward Control									
RA39, 189	Ra	WG	16 " x 6 "	1255 - 386	N/A	R40H597	R40H9200	NLA	NLA
	Rm	WG	16 " x 6 "	1255 - 386	N/A	R40H597	R40H9200	R404149	R404150
M1600, M1652, M1654 Metro Series, Forward Control									
RA44	Ra	WG	15 " x 7 "	4597 - 383	R700383	R40H597	R40H9200	R40H3540	R40H3541
1974									
M1600, M1652, M1654 Metro Series, Forward Control									
FA209	Fa	WG	15 " x 3 "	1245C - 321	R700321	R40H521	R40H9237	R40H3502	R40H3503
	Fm	WG	15 " x 3 "	1245A - 235	R700235	R40H521	R40H9201	R40H3524	R40H3524
M1600, M1652, M1654 Metro Series, Forward Control									
FA69	Fa	WG	14 " x 2-1/2 "	1294A - 325	N/A	R40H521	R40H9237	R40H3502	R40H3503
	Fm	WG	14 " x 2-1/2 "	1294 - 296	N/A	R40H521	R40H9201	R40H3524	R40H3524
M1600, M1652, M1654 Metro Series, Forward Control									
FA73, 101	Fa	WG	15 " x 3-1/2 "	1280B - 322	R464004	R40H521	R40H9237	R40H3502	R40H3503
	Fm	WG	15 " x 3-1/2 "	1280 - 463	R700463	R40H521	R40H9201	R40H3524	R40H3524
M1600, M1652, M1654 Metro Series, Forward Control									
FA73, 101, 109	Fa	WG	15 " x 3 "	1245C - 321	R700321	R40H521	R40H9237	R40H3502	R40H3503
	Fm	WG	15 " x 3 "	1245A - 235	R700235	R40H521	R40H9201	R40H3524	R40H3524
M1600, M1652, M1654 Metro Series, Forward Control									
FA74	Fa	WG	15 " x 3 "	1245C - 321	R700321	R40H521	R40H9237	R40H3502	R40H3503
	Fm	WG	15 " x 3 "	1245A - 235	R700235	R40H521	R40H9201	R40H3524	R40H3524
M1600, M1652, M1654 Metro Series, Forward Control									
FA78, 81	Fa	WG	15 " x 3 "	1245C - 321	R700321	R40H521	R40H9237	R40H3502	R40H3503
M1600, M1652, M1654 Metro Series, Forward Control									
FA99	Fa	WG	15 " x 3 "	1245C - 321	R700321	R40H521	R40H9237	R40H3502	R40H3503
	Fm	WG	15 " x 3 "	1245A - 235	R700235	R40H521	R40H9201	R40H3524	R40H3524
M1600, M1652, M1654 Metro Series, Forward Control									
RA25, 126, 184	Ra	WG	15 " x 4 "	4645A - 376	Discontinued	R40H597	R40H9200	R40H3540	R40H3541
	Ra	WG	15 " x 5 "	1252 - 346	R700346	R40H597	R40H9200	R40H3540	R40H3541
	Rm	WG	15 " x 4 "	4645A - 376	Discontinued	R40H597	R40H9200	R40H3518	R404148
	Rm	WG	15 " x 5 "	1252 - 346	R700346	R40H597	R40H9200	R40H3518	R404148
M1600, M1652, M1654 Metro Series, Forward Control									
RA30, 39, 127, 187, 189	Ra	WG	15 " x 5 "	1252 - 346	R700346	R40H597	R40H9200	R40H3540	R40H3541
	Rm	WG	15 " x 5 "	1252 - 346	R700346	R40H597	R40H9200	R40H3518	R404148
M1600, M1652, M1654 Metro Series, Fwd Control									
RA39	Ra	WG	15 " x 6 "	4596 - 381	R700381	R40H597	R40H9200	R40H3540	R40H3541

MERITOR DRUM OR ROTOR NO.	CALIPER OR CYLINDER BORE SIZE	MERITOR CALIPER OR WHEEL CYLINDER (LEFT)	MERITOR CALIPER OR WHEEL CYLINDER (RIGHT)	MERITOR CALIPER OR WHEEL CYLINDER REPAIR KIT	MERITOR CALIPER PISTON	MERITOR MASTER CYLINDER	MERITOR MASTER CYLINDER KIT	MERITOR BRAKE HOSE (LEFT)	MERITOR BRAKE HOSE (RIGHT)
ITE(Cont.)									
160, 1600, 1650 SERIES(Cont.)									
-	1-1/2 "	R4133580	R4133580	Discontinued	NR	-	-	-	-
-	1-5/8 "	R4133338	R4133338	R4166689	NR	-	-	-	-
-	1-7/8 "	R4133584	R4133584	R4166897	NR	-	-	-	-
-	1-7/8 "	R4133584	R4133584	R4166897	NR	-	-	-	-
-	1-3/4 "	R4133400	R4133400	R4166917	NR	-	-	-	-
-	1-1/4 "	R4133581	R4133582	R4166923	NR	-	-	-	-
-	1-1/4 "	R4133581	R4133582	R4166923	NR	-	-	-	-
-	1-1/8 "	R4133714	R4133715	R4166926	NR	-	-	-	-
-	1-1/8 "	R4133714	R4133715	R4166926	NR	-	-	-	-
-	1-1/4 "	R4133581	R4133582	R4166923	NR	-	-	-	-
-	1-1/4 "	R4133581	R4133582	R4166923	NR	-	-	-	-
-	1-1/4 "	R4133581	R4133582	R4166923	NR	-	-	-	-
-	1-1/8 "	R4133714	R4133715	R4166926	NR	-	-	-	-
-	1-1/4 "	R4133581	R4133582	R4166923	NR	-	-	-	-
-	1-1/4 "	R4133581	R4133582	R4166923	NR	-	-	-	-
-	1-1/8 "	R4133320	R4133321	R4166926	NR	-	-	-	-
-	1-1/4 "	R4133581	R4133582	R4166923	NR	-	-	-	-
-	1-1/4 "	R4133581	R4133582	R4166923	NR	-	-	-	-
-	1-1/2 "	R4133580	R4133580	Discontinued	NR	-	-	-	-
-	1-5/8 "	R4133338	R4133338	R4166689	NR	-	-	-	-
-	1-1/2 "	R4133580	R4133580	Discontinued	NR	-	-	-	-
-	1-5/8 "	R4133338	R4133338	R4166689	NR	-	-	-	-
-	1-1/2 "	R4133580	R4133580	Discontinued	NR	-	-	-	-
-	1-1/2 "	R4133580	R4133580	Discontinued	NR	-	-	-	-
-	1-5/8 "	R4133338	R4133338	R4166689	NR	-	-	-	-

MAKE MODEL YEAR AXLE CODE AXLE WEIGHT	AXLE & BRK. TYPE	BRK. MFG.	BRAKE SIZE	FMSI	MERITOR DISC PAD OR BRAKE SHOE	MERITOR GUIDE PIN OR RETURN SPRING KIT	MERITOR CALIPER HWD. KIT OR RETURN SPRING KIT	MERITOR ADJUSTER KIT (LEFT WHEEL)	MERITOR ADJUSTER KIT (RIGHT WHEEL)
ITE(Cont.)									
160, 1600, 1650 SERIES(Cont.)									
1974 M1600, M1652, M1654 Metro Series, Forward Control RA39, 189	Ra	WG	16 " x 6 "	1255 - 386	N/A	R40H597	R40H9200	NLA	NLA
	Rm	WG	16 " x 6 "	1255 - 386	N/A	R40H597	R40H9200	R404149	R404150
M1600, M1652, M1654 Metro Series, Forward Control RA44	Ra	WG	15 " x 7 "	4597 - 383	R700383	R40H597	R40H9200	R40H3540	R40H3541
1973 M1600, M1652, M1654 Metro Series, Forward Control FA209	Fa	WG	15 " x 3 "	1245C - 321	R700321	R40H521	R40H9237	R40H3502	R40H3503
	Fm	WG	15 " x 3 "	1245A - 235	R700235	R40H521	R40H9201	R40H3524	R40H3524
M1600, M1652, M1654 Metro Series, Forward Control FA69	Fa	WG	14 " x 2-1/2 "	1294A - 325	N/A	R40H521	R40H9237	R40H3502	R40H3503
	Fm	WG	14 " x 2-1/2 "	1294 - 296	N/A	R40H521	R40H9201	R40H3524	R40H3524
M1600, M1652, M1654 Metro Series, Forward Control FA73, 101	Fa	WG	15 " x 3-1/2 "	1280B - 322	R464004	R40H521	R40H9237	R40H3502	R40H3503
	Fm	WG	15 " x 3-1/2 "	1280 - 463	R700463	R40H521	R40H9201	R40H3524	R40H3524
M1600, M1652, M1654 Metro Series, Forward Control FA73, 101, 109	Fa	WG	15 " x 3 "	1245C - 321	R700321	R40H521	R40H9237	R40H3502	R40H3503
	Fm	WG	15 " x 3 "	1245A - 235	R700235	R40H521	R40H9201	R40H3524	R40H3524
M1600, M1652, M1654 Metro Series, Forward Control FA74	Fa	WG	15 " x 3 "	1245C - 321	R700321	R40H521	R40H9237	R40H3502	R40H3503
	Fm	WG	15 " x 3 "	1245A - 235	R700235	R40H521	R40H9201	R40H3524	R40H3524
M1600, M1652, M1654 Metro Series, Forward Control FA78, 81	Fa	WG	15 " x 3 "	1245C - 321	R700321	R40H521	R40H9237	R40H3502	R40H3503
M1600, M1652, M1654 Metro Series, Forward Control FA99	Fa	WG	15 " x 3 "	1245C - 321	R700321	R40H521	R40H9237	R40H3502	R40H3503
	Fm	WG	15 " x 3 "	1245A - 235	R700235	R40H521	R40H9201	R40H3524	R40H3524
M1600, M1652, M1654 Metro Series, Forward Control RA25, 126, 184	Ra	WG	15 " x 4 "	4645A - 376	Discontinued	R40H597	R40H9200	R40H3540	R40H3541
	Ra	WG	15 " x 5 "	1252 - 346	R700346	R40H597	R40H9200	R40H3540	R40H3541
	Rm	WG	15 " x 4 "	4645A - 376	Discontinued	R40H597	R40H9200	R40H3518	R404148
	Rm	WG	15 " x 5 "	1252 - 346	R700346	R40H597	R40H9200	R40H3518	R404148
M1600, M1652, M1654 Metro Series, Forward Control RA30, 39, 127, 187, 189	Ra	WG	15 " x 5 "	1252 - 346	R700346	R40H597	R40H9200	R40H3540	R40H3541
	Rm	WG	15 " x 5 "	1252 - 346	R700346	R40H597	R40H9200	R40H3518	R404148
M1600, M1652, M1654 Metro Series, Forward Control RA39	Ra	WG	15 " x 6 "	4596 - 381	R700381	R40H597	R40H9200	R40H3540	R40H3541
M1600, M1652, M1654 Metro Series, Forward Control RA39, 189	Ra	WG	16 " x 6 "	1255 - 386	N/A	R40H597	R40H9200	NLA	NLA

MERITOR DRUM OR ROTOR NO.	CALIPER OR CYLINDER BORE SIZE	MERITOR CALIPER OR WHEEL CYLINDER (LEFT)	MERITOR CALIPER OR WHEEL CYLINDER (RIGHT)	MERITOR CALIPER OR WHEEL CYLINDER REPAIR KIT	MERITOR CALIPER PISTON	MERITOR MASTER CYLINDER	MERITOR MASTER CYLINDER KIT	MERITOR BRAKE HOSE (LEFT)	MERITOR BRAKE HOSE (RIGHT)
									ITE(Cont.)
									160, 1600, 1650 SERIES(Cont.)
-	1-7/8 "	R4133584	R4133584	R4166897	NR	-	-	-	-
-	1-7/8 "	R4133584	R4133584	R4166897	NR	-	-	-	-
-	1-3/4 "	R4133400	R4133400	R4166917	NR	-	-	-	-
-	1-1/4 "	R4133581	R4133582	R4166923	NR	-	-	-	-
-	1-1/4 "	R4133581	R4133582	R4166923	NR	-	-	-	-
-	1-1/8 "	R4133714	R4133715	R4166926	NR	-	-	-	-
-	1-1/8 "	R4133714	R4133715	R4166926	NR	-	-	-	-
-	1-1/4 "	R4133581	R4133582	R4166923	NR	-	-	-	-
-	1-1/4 "	R4133581	R4133582	R4166923	NR	-	-	-	-
-	1-1/4 "	R4133581	R4133582	R4166923	NR	-	-	-	-
-	1-1/8 "	R4133714	R4133715	R4166926	NR	-	-	-	-
-	1-1/4 "	R4133581	R4133582	R4166923	NR	-	-	-	-
-	1-1/4 "	R4133581	R4133582	R4166923	NR	-	-	-	-
-	1-1/8 "	R4133320	R4133321	R4166926	NR	-	-	-	-
-	1-1/4 "	R4133581	R4133582	R4166923	NR	-	-	-	-
-	1-1/4 "	R4133581	R4133582	R4166923	NR	-	-	-	-
-	1-1/2 "	R4133580	R4133580	Discontinued	NR	-	-	-	-
-	1-5/8 "	R4133338	R4133338	R4166689	NR	-	-	-	-
-	1-1/2 "	R4133580	R4133580	Discontinued	NR	-	-	-	-
-	1-5/8 "	R4133338	R4133338	R4166689	NR	-	-	-	-
-	1-1/2 "	R4133580	R4133580	Discontinued	NR	-	-	-	-
-	1-1/2 "	R4133580	R4133580	Discontinued	NR	-	-	-	-
-	1-5/8 "	R4133338	R4133338	R4166689	NR	-	-	-	-
-	1-7/8 "	R4133584	R4133584	R4166897	NR	-	-	-	-

MAKE MODEL YEAR AXLE CODE AXLE WEIGHT	AXLE & BRK. TYPE	BRK. MFG.	BRAKE SIZE	FMSI	MERITOR DISC PAD OR BRAKE SHOE	MERITOR GUIDE PIN OR RETURN SPRING KIT	MERITOR CALIPER HWD. KIT OR RETURN SPRING KIT	MERITOR ADJUSTER KIT (LEFT WHEEL)	MERITOR ADJUSTER KIT (RIGHT WHEEL)
ITE(Cont.)									
160, 1600, 1650 SERIES(Cont.)									
1973	Rm	WG	16 " x 6 "	1255 - 386	N/A	R40H597	R40H9200	R404149	R404150
M1600, M1652, M1654 Metro Series, Forward Control RA44	Ra	WG	15 " x 7 "	4597 - 383	R700383	R40H597	R40H9200	R40H3540	R40H3541
1972 M1600, M1652, M1654 Metro Series, Forward Control FA209	Fa	WG	15 " x 3 "	1245C - 321	R700321	R40H521	R40H9237	R40H3502	R40H3503
	Fm	WG	15 " x 3 "	1245A - 235	R700235	R40H521	R40H9201	R40H3524	R40H3524
M1600, M1652, M1654 Metro Series, Forward Control FA69	Fa	WG	14 " x 2-1/2 "	1294A - 325	N/A	R40H521	R40H9237	R40H3502	R40H3503
	Fm	WG	14 " x 2-1/2 "	1294 - 296	N/A	R40H521	R40H9201	R40H3524	R40H3524
M1600, M1652, M1654 Metro Series, Forward Control FA73, 101	Fa	WG	15 " x 3-1/2 "	1280B - 322	R464004	R40H521	R40H9237	R40H3502	R40H3503
	Fm	WG	15 " x 3-1/2 "	1280 - 463	R700463	R40H521	R40H9201	R40H3524	R40H3524
M1600, M1652, M1654 Metro Series, Forward Control FA73, 101, 109	Fa	WG	15 " x 3 "	1245C - 321	R700321	R40H521	R40H9237	R40H3502	R40H3503
	Fm	WG	15 " x 3 "	1245A - 235	R700235	R40H521	R40H9201	R40H3524	R40H3524
M1600, M1652, M1654 Metro Series, Forward Control FA74	Fa	WG	15 " x 3 "	1245C - 321	R700321	R40H521	R40H9237	R40H3502	R40H3503
	Fm	WG	15 " x 3 "	1245A - 235	R700235	R40H521	R40H9201	R40H3524	R40H3524
M1600, M1652, M1654 Metro Series, Forward Control FA78, 81	Fa	WG	15 " x 3 "	1245C - 321	R700321	R40H521	R40H9237	R40H3502	R40H3503
M1600, M1652, M1654 Metro Series, Forward Control FA99	Fa	WG	15 " x 3 "	1245C - 321	R700321	R40H521	R40H9237	R40H3502	R40H3503
	Fm	WG	15 " x 3 "	1245A - 235	R700235	R40H521	R40H9201	R40H3524	R40H3524
M1600, M1652, M1654 Metro Series, Forward Control RA25, 126, 184	Ra	WG	15 " x 4 "	4645A - 376	Discontinued	R40H597	R40H9200	R40H3540	R40H3541
	Ra	WG	15 " x 5 "	1252 - 346	R700346	R40H597	R40H9200	R40H3540	R40H3541
	Rm	WG	15 " x 4 "	4645A - 376	Discontinued	R40H597	R40H9200	R40H3518	R404148
	Rm	WG	15 " x 5 "	1252 - 346	R700346	R40H597	R40H9200	R40H3518	R404148
M1600, M1652, M1654 Metro Series, Forward Control RA30, 39, 127, 187, 189	Ra	WG	15 " x 5 "	1252 - 346	R700346	R40H597	R40H9200	R40H3540	R40H3541
	Rm	WG	15 " x 5 "	1252 - 346	R700346	R40H597	R40H9200	R40H3518	R404148
M1600, M1652, M1654 Metro Series, Forward Control RA39	Ra	WG	15 " x 6 "	4596 - 381	R700381	R40H597	R40H9200	R40H3540	R40H3541
M1600, M1652, M1654 Metro Series, Forward Control RA39, 189	Ra	WG	16 " x 6 "	1255 - 386	N/A	R40H597	R40H9200	NLA	NLA
	Rm	WG	16 " x 6 "	1255 - 386	N/A	R40H597	R40H9200	R404149	R404150
M1600, M1652, M1654 Metro Series, Forward Control RA44	Ra	WG	15 " x 7 "	4597 - 383	R700383	R40H597	R40H9200	R40H3540	R40H3541

MERITOR DRUM OR ROTOR NO.	CALIPER OR CYLINDER BORE SIZE	MERITOR CALIPER OR WHEEL CYLINDER (LEFT)	MERITOR CALIPER OR WHEEL CYLINDER (RIGHT)	MERITOR CALIPER OR WHEEL CYLINDER REPAIR KIT	MERITOR CALIPER PISTON	MERITOR MASTER CYLINDER	MERITOR MASTER CYLINDER KIT	MERITOR BRAKE HOSE (LEFT)	MERITOR BRAKE HOSE (RIGHT)
ITE(Cont.)									
160, 1600, 1650 SERIES(Cont.)									
-	1-7/8 "	R4133584	R4133584	R4166897	NR	-	-	-	-
-	1-3/4 "	R4133400	R4133400	R4166917	NR	-	-	-	-
-	1-1/4 "	R4133581	R4133582	R4166923	NR	-	-	-	-
-	1-1/4 "	R4133581	R4133582	R4166923	NR	-	-	-	-
-	1-1/8 "	R4133714	R4133715	R4166926	NR	-	-	-	-
-	1-1/8 "	R4133714	R4133715	R4166926	NR	-	-	-	-
-	1-1/4 "	R4133581	R4133582	R4166923	NR	-	-	-	-
-	1-1/4 "	R4133581	R4133582	R4166923	NR	-	-	-	-
-	1-1/4 "	R4133581	R4133582	R4166923	NR	-	-	-	-
-	1-1/8 "	R4133714	R4133715	R4166926	NR	-	-	-	-
-	1-1/4 "	R4133581	R4133582	R4166923	NR	-	-	-	-
-	1-1/4 "	R4133581	R4133582	R4166923	NR	-	-	-	-
-	1-1/8 "	R4133320	R4133321	R4166926	NR	-	-	-	-
-	1-1/4 "	R4133581	R4133582	R4166923	NR	-	-	-	-
-	1-1/4 "	R4133581	R4133582	R4166923	NR	-	-	-	-
-	1-1/2 "	R4133580	R4133580	Discontinued	NR	-	-	-	-
-	1-5/8 "	R4133338	R4133338	R4166689	NR	-	-	-	-
-	1-1/2 "	R4133580	R4133580	Discontinued	NR	-	-	-	-
-	1-5/8 "	R4133338	R4133338	R4166689	NR	-	-	-	-
-	1-1/2 "	R4133580	R4133580	Discontinued	NR	-	-	-	-
-	1-1/2 "	R4133580	R4133580	Discontinued	NR	-	-	-	-
-	1-5/8 "	R4133338	R4133338	R4166689	NR	-	-	-	-
-	1-7/8 "	R4133584	R4133584	R4166897	NR	-	-	-	-
-	1-7/8 "	R4133584	R4133584	R4166897	NR	-	-	-	-
-	1-3/4 "	R4133400	R4133400	R4166917	NR	-	-	-	-

MAKE MODEL YEAR AXLE CODE AXLE WEIGHT	AXLE & BRK. TYPE	BRK. MFG.	BRAKE SIZE	FMSI	MERITOR DISC PAD OR BRAKE SHOE	MERITOR GUIDE PIN OR RETURN SPRING KIT	MERITOR CALIPER HWD. KIT OR RETURN SPRING KIT	MERITOR ADJUSTER KIT (LEFT WHEEL)	MERITOR ADJUSTER KIT (RIGHT WHEEL)
ITE(Cont.)									
160, 1600, 1650 SERIES(Cont.)									
1971 M1600, M1652, M1654 Metro Series, Forward Control FA209	Fa	WG	15 " x 3 "	1245C - 321	R700321	R40H521	R40H9237	R40H3502	R40H3503
	Fm	WG	15 " x 3 "	1245A - 235	R700235	R40H521	R40H9201	R40H3524	R40H3524
M1600, M1652, M1654 Metro Series, Forward Control FA69	Fa	WG	14 " x 2-1/2 "	1294A - 325	N/A	R40H521	R40H9237	R40H3502	R40H3503
	Fm	WG	14 " x 2-1/2 "	1294 - 296	N/A	R40H521	R40H9201	R40H3524	R40H3524
M1600, M1652, M1654 Metro Series, Forward Control FA73, 101	Fa	WG	15 " x 3-1/2 "	1280B - 322	R464004	R40H521	R40H9237	R40H3502	R40H3503
	Fm	WG	15 " x 3-1/2 "	1280 - 463	R700463	R40H521	R40H9201	R40H3524	R40H3524
M1600, M1652, M1654 Metro Series, Forward Control FA73, 101, 109	Fa	WG	15 " x 3 "	1245C - 321	R700321	R40H521	R40H9237	R40H3502	R40H3503
	Fm	WG	15 " x 3 "	1245A - 235	R700235	R40H521	R40H9201	R40H3524	R40H3524
M1600, M1652, M1654 Metro Series, Forward Control FA74	Fa	WG	15 " x 3 "	1245C - 321	R700321	R40H521	R40H9237	R40H3502	R40H3503
	Fm	WG	15 " x 3 "	1245A - 235	R700235	R40H521	R40H9201	R40H3524	R40H3524
M1600, M1652, M1654 Metro Series, Forward Control FA78, 81	Fa	WG	15 " x 3 "	1245C - 321	R700321	R40H521	R40H9237	R40H3502	R40H3503
M1600, M1652, M1654 Metro Series, Forward Control FA99	Fa	WG	15 " x 3 "	1245C - 321	R700321	R40H521	R40H9237	R40H3502	R40H3503
	Fm	WG	15 " x 3 "	1245A - 235	R700235	R40H521	R40H9201	R40H3524	R40H3524
M1600, M1652, M1654 Metro Series, Forward Control RA25, 126, 184	Ra	WG	15 " x 4 "	4645A - 376	Discontinued	R40H597	R40H9200	R40H3540	R40H3541
	Ra	WG	15 " x 5 "	1252 - 346	R700346	R40H597	R40H9200	R40H3540	R40H3541
	Rm	WG	15 " x 4 "	4645A - 376	Discontinued	R40H597	R40H9200	R40H3518	R404148
	Rm	WG	15 " x 5 "	1252 - 346	R700346	R40H597	R40H9200	R40H3518	R404148
M1600, M1652, M1654 Metro Series, Forward Control RA30, 39, 127, 187, 189	Ra	WG	15 " x 5 "	1252 - 346	R700346	R40H597	R40H9200	R40H3540	R40H3541
	Rm	WG	15 " x 5 "	1252 - 346	R700346	R40H597	R40H9200	R40H3518	R404148
M1600, M1652, M1654 Metro Series, Forward Control RA39	Ra	WG	15 " x 6 "	4596 - 381	R700381	R40H597	R40H9200	R40H3540	R40H3541
M1600, M1652, M1654 Metro Series, Forward Control RA39, 189	Ra	WG	16 " x 6 "	1255 - 386	N/A	R40H597	R40H9200	NLA	NLA
	Rm	WG	16 " x 6 "	1255 - 386	N/A	R40H597	R40H9200	R404149	R404150
M1600, M1652, M1654 Metro Series, Forward Control RA44	Ra	WG	15 " x 7 "	4597 - 383	R700383	R40H597	R40H9200	R40H3540	R40H3541
1970 M1600, M1652, M1654 Metro Series, Forward Control FA209	Fa	WG	15 " x 3 "	1245C - 321	R700321	R40H521	R40H9237	R40H3502	R40H3503

MERITOR DRUM OR ROTOR NO.	CALIPER OR CYLINDER BORE SIZE	MERITOR CALIPER OR WHEEL CYLINDER (LEFT)	MERITOR CALIPER OR WHEEL CYLINDER (RIGHT)	MERITOR CALIPER OR WHEEL CYLINDER REPAIR KIT	MERITOR CALIPER PISTON	MERITOR MASTER CYLINDER	MERITOR MASTER CYLINDER KIT	MERITOR BRAKE HOSE (LEFT)	MERITOR BRAKE HOSE (RIGHT)
ITE(Cont.)									
160, 1600, 1650 SERIES(Cont.)									
-	1-1/4 "	R4133581	R4133582	R4166923	NR	-	-	-	-
-	1-1/4 "	R4133581	R4133582	R4166923	NR	-	-	-	-
-	1-1/8 "	R4133714	R4133715	R4166926	NR	-	-	-	-
-	1-1/8 "	R4133714	R4133715	R4166926	NR	-	-	-	-
-	1-1/4 "	R4133581	R4133582	R4166923	NR	-	-	-	-
-	1-1/4 "	R4133581	R4133582	R4166923	NR	-	-	-	-
-	1-1/4 "	R4133581	R4133582	R4166923	NR	-	-	-	-
-	1-1/8 "	R4133714	R4133715	R4166926	NR	-	-	-	-
-	1-1/4 "	R4133581	R4133582	R4166923	NR	-	-	-	-
-	1-1/4 "	R4133581	R4133582	R4166923	NR	-	-	-	-
-	1-1/8 "	R4133320	R4133321	R4166926	NR	-	-	-	-
-	1-1/4 "	R4133581	R4133582	R4166923	NR	-	-	-	-
-	1-1/4 "	R4133581	R4133582	R4166923	NR	-	-	-	-
-	1-1/2 "	R4133580	R4133580	Discontinued	NR	-	-	-	-
-	1-5/8 "	R4133338	R4133338	R4166689	NR	-	-	-	-
-	1-1/2 "	R4133580	R4133580	Discontinued	NR	-	-	-	-
-	1-5/8 "	R4133338	R4133338	R4166689	NR	-	-	-	-
-	1-1/2 "	R4133580	R4133580	Discontinued	NR	-	-	-	-
-	1-1/2 "	R4133580	R4133580	Discontinued	NR	-	-	-	-
-	1-5/8 "	R4133338	R4133338	R4166689	NR	-	-	-	-
-	1-7/8 "	R4133584	R4133584	R4166897	NR	-	-	-	-
-	1-7/8 "	R4133584	R4133584	R4166897	NR	-	-	-	-
-	1-3/4 "	R4133400	R4133400	R4166917	NR	-	-	-	-
-	1-1/4 "	R4133581	R4133582	R4166923	NR	-	-	-	-

MAKE MODEL YEAR AXLE CODE AXLE WEIGHT	AXLE & BRK. TYPE	BRK. MFG.	BRAKE SIZE	FMSI	MERITOR DISC PAD OR BRAKE SHOE	MERITOR GUIDE PIN OR RETURN SPRING KIT	MERITOR CALIPER HWD. KIT OR RETURN SPRING KIT	MERITOR ADJUSTER KIT (LEFT WHEEL)	MERITOR ADJUSTER KIT (RIGHT WHEEL)
ITE(Cont.)									
160, 1600, 1650 SERIES(Cont.)									
1970									
	Fm	WG	15 " x 3 "	1245A - 235	R700235	R40H521	R40H9201	R40H3524	R40H3524
M1600, M1652, M1654 Metro Series, Forward Control									
FA69	Fa	WG	14 " x 2-1/2 "	1294A - 325	N/A	R40H521	R40H9237	R40H3502	R40H3503
	Fm	WG	14 " x 2-1/2 "	1294 - 296	N/A	R40H521	R40H9201	R40H3524	R40H3524
M1600, M1652, M1654 Metro Series, Forward Control									
FA73, 101	Fa	WG	15 " x 3-1/2 "	1280B - 322	R464004	R40H521	R40H9237	R40H3502	R40H3503
	Fm	WG	15 " x 3-1/2 "	1280 - 463	R700463	R40H521	R40H9201	R40H3524	R40H3524
M1600, M1652, M1654 Metro Series, Forward Control									
FA73, 101, 109	Fa	WG	15 " x 3 "	1245C - 321	R700321	R40H521	R40H9237	R40H3502	R40H3503
	Fm	WG	15 " x 3 "	1245A - 235	R700235	R40H521	R40H9201	R40H3524	R40H3524
M1600, M1652, M1654 Metro Series, Forward Control									
FA74	Fa	WG	15 " x 3 "	1245C - 321	R700321	R40H521	R40H9237	R40H3502	R40H3503
	Fm	WG	15 " x 3 "	1245A - 235	R700235	R40H521	R40H9201	R40H3524	R40H3524
M1600, M1652, M1654 Metro Series, Forward Control									
FA78, 81	Fa	WG	15 " x 3 "	1245C - 321	R700321	R40H521	R40H9237	R40H3502	R40H3503
M1600, M1652, M1654 Metro Series, Forward Control									
FA99	Fa	WG	15 " x 3 "	1245C - 321	R700321	R40H521	R40H9237	R40H3502	R40H3503
	Fm	WG	15 " x 3 "	1245A - 235	R700235	R40H521	R40H9201	R40H3524	R40H3524
M1600, M1652, M1654 Metro Series, Forward Control									
RA25, 126, 184	Ra	WG	15 " x 4 "	4645A - 376	Discontinued	R40H597	R40H9200	R40H3540	R40H3541
	Ra	WG	15 " x 5 "	1252 - 346	R700346	R40H597	R40H9200	R40H3540	R40H3541
	Rm	WG	15 " x 4 "	4645A - 376	Discontinued	R40H597	R40H9200	R40H3518	R404148
	Rm	WG	15 " x 5 "	1252 - 346	R700346	R40H597	R40H9200	R40H3518	R404148
M1600, M1652, M1654 Metro Series, Forward Control									
RA30, 39, 127, 187, 189	Ra	WG	15 " x 5 "	1252 - 346	R700346	R40H597	R40H9200	R40H3540	R40H3541
	Rm	WG	15 " x 5 "	1252 - 346	R700346	R40H597	R40H9200	R40H3518	R404148
M1600, M1652, M1654 Metro Series, Forward Control									
RA39	Ra	WG	15 " x 6 "	4596 - 381	R700381	R40H597	R40H9200	R40H3540	R40H3541
M1600, M1652, M1654 Metro Series, Forward Control									
RA39, 189	Ra	WG	16 " x 6 "	1255 - 386	N/A	R40H597	R40H9200	NLA	NLA
	Rm	WG	16 " x 6 "	1255 - 386	N/A	R40H597	R40H9200	R404149	R404150
M1600, M1652, M1654 Metro Series, Forward Control									
RA44	Ra	WG	15 " x 7 "	4597 - 383	R700383	R40H597	R40H9200	R40H3540	R40H3541
1969 M1600, M1652, M1654 Metro Series, Forward Control									
FA209	Fa	WG	15 " x 3 "	1245C - 321	R700321	R40H521	R40H9237	R40H3502	R40H3503
	Fm	WG	15 " x 3 "	1245A - 235	R700235	R40H521	R40H9201	R40H3524	R40H3524
M1600, M1652, M1654 Metro Series, Forward Control									
FA69	Fa	WG	14 " x 2-1/2 "	1294A - 325	N/A	R40H521	R40H9237	R40H3502	R40H3503

MERITOR DRUM OR ROTOR NO.	CALIPER OR CYLINDER BORE SIZE	MERITOR CALIPER OR WHEEL CYLINDER (LEFT)	MERITOR CALIPER OR WHEEL CYLINDER (RIGHT)	MERITOR CALIPER OR WHEEL CYLINDER REPAIR KIT	MERITOR CALIPER PISTON	MERITOR MASTER CYLINDER	MERITOR MASTER CYLINDER KIT	MERITOR BRAKE HOSE (LEFT)	MERITOR BRAKE HOSE (RIGHT)
ITE(Cont.)									
160, 1600, 1650 SERIES(Cont.)									
-	1-1/4 "	R4133581	R4133582	R4166923	NR	-	-	-	-
-	1-1/8 "	R4133714	R4133715	R4166926	NR	-	-	-	-
-	1-1/8 "	R4133714	R4133715	R4166926	NR	-	-	-	-
-	1-1/4 "	R4133581	R4133582	R4166923	NR	-	-	-	-
-	1-1/4 "	R4133581	R4133582	R4166923	NR	-	-	-	-
-	1-1/4 "	R4133581	R4133582	R4166923	NR	-	-	-	-
-	1-1/8 "	R4133714	R4133715	R4166926	NR	-	-	-	-
-	1-1/4 "	R4133581	R4133582	R4166923	NR	-	-	-	-
-	1-1/4 "	R4133581	R4133582	R4166923	NR	-	-	-	-
-	1-1/8 "	R4133320	R4133321	R4166926	NR	-	-	-	-
-	1-1/4 "	R4133581	R4133582	R4166923	NR	-	-	-	-
-	1-1/4 "	R4133581	R4133582	R4166923	NR	-	-	-	-
-	1-1/2 "	R4133580	R4133580	Discontinued	NR	-	-	-	-
-	1-5/8 "	R4133338	R4133338	R4166689	NR	-	-	-	-
-	1-1/2 "	R4133580	R4133580	Discontinued	NR	-	-	-	-
-	1-5/8 "	R4133338	R4133338	R4166689	NR	-	-	-	-
-	1-1/2 "	R4133580	R4133580	Discontinued	NR	-	-	-	-
-	1-1/2 "	R4133580	R4133580	Discontinued	NR	-	-	-	-
-	1-5/8 "	R4133338	R4133338	R4166689	NR	-	-	-	-
-	1-7/8 "	R4133584	R4133584	R4166897	NR	-	-	-	-
-	1-7/8 "	R4133584	R4133584	R4166897	NR	-	-	-	-
-	1-3/4 "	R4133400	R4133400	R4166917	NR	-	-	-	-
-	1-1/4 "	R4133581	R4133582	R4166923	NR	-	-	-	-
-	1-1/4 "	R4133581	R4133582	R4166923	NR	-	-	-	-
-	1-1/8 "	R4133714	R4133715	R4166926	NR	-	-	-	-

MAKE MODEL YEAR AXLE CODE AXLE WEIGHT	AXLE & BRK. TYPE	BRK. MFG.	BRAKE SIZE	FMSI	MERITOR DISC PAD OR BRAKE SHOE	MERITOR GUIDE PIN OR RETURN SPRING KIT	MERITOR CALIPER HWD. KIT OR RETURN SPRING KIT	MERITOR ADJUSTER KIT (LEFT WHEEL)	MERITOR ADJUSTER KIT (RIGHT WHEEL)
ITE(Cont.)									
160, 1600, 1650 SERIES(Cont.)									
1969									
	Fm	WG	14 " x 2-1/2 "	1294 - 296	N/A	R40H521	R40H9201	R40H3524	R40H3524
M1600, M1652, M1654 Metro Series, Forward Control									
FA73, 101	Fa	WG	15 " x 3-1/2 "	1280B - 322	R464004	R40H521	R40H9237	R40H3502	R40H3503
	Fm	WG	15 " x 3-1/2 "	1280 - 463	R700463	R40H521	R40H9201	R40H3524	R40H3524
M1600, M1652, M1654 Metro Series, Forward Control									
FA73, 101, 109	Fa	WG	15 " x 3 "	1245C - 321	R700321	R40H521	R40H9237	R40H3502	R40H3503
	Fm	WG	15 " x 3 "	1245A - 235	R700235	R40H521	R40H9201	R40H3524	R40H3524
M1600, M1652, M1654 Metro Series, Forward Control									
FA74	Fa	WG	15 " x 3 "	1245C - 321	R700321	R40H521	R40H9237	R40H3502	R40H3503
	Fm	WG	15 " x 3 "	1245A - 235	R700235	R40H521	R40H9201	R40H3524	R40H3524
M1600, M1652, M1654 Metro Series, Forward Control									
FA78, 81	Fa	WG	15 " x 3 "	1245C - 321	R700321	R40H521	R40H9237	R40H3502	R40H3503
M1600, M1652, M1654 Metro Series, Forward Control									
FA99	Fa	WG	15 " x 3 "	1245C - 321	R700321	R40H521	R40H9237	R40H3502	R40H3503
	Fm	WG	15 " x 3 "	1245A - 235	R700235	R40H521	R40H9201	R40H3524	R40H3524
M1600, M1652, M1654 Metro Series, Forward Control									
RA25, 126, 184	Ra	WG	15 " x 4 "	4645A - 376	Discontinued	R40H597	R40H9200	R40H3540	R40H3541
	Ra	WG	15 " x 5 "	1252 - 346	R700346	R40H597	R40H9200	R40H3540	R40H3541
	Rm	WG	15 " x 4 "	4645A - 376	Discontinued	R40H597	R40H9200	R40H3518	R404148
	Rm	WG	15 " x 5 "	1252 - 346	R700346	R40H597	R40H9200	R40H3518	R404148
M1600, M1652, M1654 Metro Series, Forward Control									
RA30, 39, 127, 187, 189	Ra	WG	15 " x 5 "	1252 - 346	R700346	R40H597	R40H9200	R40H3540	R40H3541
	Rm	WG	15 " x 5 "	1252 - 346	R700346	R40H597	R40H9200	R40H3518	R404148
M1600, M1652, M1654 Metro Series, Forward Control									
RA39	Ra	WG	15 " x 6 "	4596 - 381	R700381	R40H597	R40H9200	R40H3540	R40H3541
M1600, M1652, M1654 Metro Series, Forward Control									
RA39, 189	Ra	WG	16 " x 6 "	1255 - 386	N/A	R40H597	R40H9200	NLA	NLA
	Rm	WG	16 " x 6 "	1255 - 386	N/A	R40H597	R40H9200	R404149	R404150
M1600, M1652, M1654 Metro Series, Forward Control									
RA44	Ra	WG	15 " x 7 "	4597 - 383	R700383	R40H597	R40H9200	R40H3540	R40H3541
1968									
M1600, M1652, M1654 Metro Series, Forward Control									
FA209	Fa	WG	15 " x 3 "	1245C - 321	R700321	R40H521	R40H9237	R40H3502	R40H3503
	Fm	WG	15 " x 3 "	1245A - 235	R700235	R40H521	R40H9201	R40H3524	R40H3524
M1600, M1652, M1654 Metro Series, Forward Control									
FA69	Fa	WG	14 " x 2-1/2 "	1294A - 325	N/A	R40H521	R40H9237	R40H3502	R40H3503
	Fm	WG	14 " x 2-1/2 "	1294 - 296	N/A	R40H521	R40H9201	R40H3524	R40H3524
M1600, M1652, M1654 Metro Series, Fwd Control									
FA73, 101	Fa	WG	15 " x 3-1/2 "	1280B - 322	R464004	R40H521	R40H9237	R40H3502	R40H3503

MERITOR DRUM OR ROTOR NO.	CALIPER OR CYLINDER BORE SIZE	MERITOR CALIPER OR WHEEL CYLINDER (LEFT)	MERITOR CALIPER OR WHEEL CYLINDER (RIGHT)	MERITOR CALIPER OR WHEEL CYLINDER REPAIR KIT	MERITOR CALIPER PISTON	MERITOR MASTER CYLINDER	MERITOR MASTER CYLINDER KIT	MERITOR BRAKE HOSE (LEFT)	MERITOR BRAKE HOSE (RIGHT)
ITE(Cont.)									
160, 1600, 1650 SERIES(Cont.)									
-	1-1/8 "	R4133714	R4133715	R4166926	NR	-	-	-	-
-	1-1/4 "	R4133581	R4133582	R4166923	NR	-	-	-	-
-	1-1/4 "	R4133581	R4133582	R4166923	NR	-	-	-	-
-	1-1/4 "	R4133581	R4133582	R4166923	NR	-	-	-	-
-	1-1/8 "	R4133714	R4133715	R4166926	NR	-	-	-	-
-	1-1/4 "	R4133581	R4133582	R4166923	NR	-	-	-	-
-	1-1/4 "	R4133581	R4133582	R4166923	NR	-	-	-	-
-	1-1/8 "	R4133320	R4133321	R4166926	NR	-	-	-	-
-	1-1/4 "	R4133581	R4133582	R4166923	NR	-	-	-	-
-	1-1/4 "	R4133581	R4133582	R4166923	NR	-	-	-	-
-	1-1/2 "	R4133580	R4133580	Discontinued	NR	-	-	-	-
-	1-5/8 "	R4133338	R4133338	R4166689	NR	-	-	-	-
-	1-1/2 "	R4133580	R4133580	Discontinued	NR	-	-	-	-
-	1-5/8 "	R4133338	R4133338	R4166689	NR	-	-	-	-
-	1-1/2 "	R4133580	R4133580	Discontinued	NR	-	-	-	-
-	1-1/2 "	R4133580	R4133580	Discontinued	NR	-	-	-	-
-	1-5/8 "	R4133338	R4133338	R4166689	NR	-	-	-	-
-	1-7/8 "	R4133584	R4133584	R4166897	NR	-	-	-	-
-	1-7/8 "	R4133584	R4133584	R4166897	NR	-	-	-	-
-	1-3/4 "	R4133400	R4133400	R4166917	NR	-	-	-	-
-	1-1/4 "	R4133581	R4133582	R4166923	NR	-	-	-	-
-	1-1/4 "	R4133581	R4133582	R4166923	NR	-	-	-	-
-	1-1/8 "	R4133714	R4133715	R4166926	NR	-	-	-	-
-	1-1/8 "	R4133714	R4133715	R4166926	NR	-	-	-	-
-	1-1/4 "	R4133581	R4133582	R4166923	NR	-	-	-	-

MAKE MODEL YEAR AXLE CODE AXLE WEIGHT	AXLE & BRK. TYPE	BRK. MFG.	BRAKE SIZE	FMSI	MERITOR DISC PAD OR BRAKE SHOE	MERITOR GUIDE PIN OR RETURN SPRING KIT	MERITOR CALIPER HWD. KIT OR RETURN SPRING KIT	MERITOR ADJUSTER KIT (LEFT WHEEL)	MERITOR ADJUSTER KIT (RIGHT WHEEL)
ITE(Cont.)									
160, 1600, 1650 SERIES(Cont.)									
1968 M1600, M1652, M1654 Metro Series, Forward Control FA73, 101	Fm	WG	15 " x 3-1/2 "	1280 - 463	R700463	R40H521	R40H9201	R40H3524	R40H3524
M1600, M1652, M1654 Metro Series, Forward Control FA73, 101, 109	Fa	WG	15 " x 3 "	1245C - 321	R700321	R40H521	R40H9237	R40H3502	R40H3503
	Fm	WG	15 " x 3 "	1245A - 235	R700235	R40H521	R40H9201	R40H3524	R40H3524
M1600, M1652, M1654 Metro Series, Forward Control FA74	Fa	WG	15 " x 3 "	1245C - 321	R700321	R40H521	R40H9237	R40H3502	R40H3503
	Fm	WG	15 " x 3 "	1245A - 235	R700235	R40H521	R40H9201	R40H3524	R40H3524
M1600, M1652, M1654 Metro Series, Forward Control FA78, 81	Fa	WG	15 " x 3 "	1245C - 321	R700321	R40H521	R40H9237	R40H3502	R40H3503
M1600, M1652, M1654 Metro Series, Forward Control FA99	Fa	WG	15 " x 3 "	1245C - 321	R700321	R40H521	R40H9237	R40H3502	R40H3503
	Fm	WG	15 " x 3 "	1245A - 235	R700235	R40H521	R40H9201	R40H3524	R40H3524
M1600, M1652, M1654 Metro Series, Forward Control RA25, 126, 184	Ra	WG	15 " x 4 "	4645A - 376	Discontinued	R40H597	R40H9200	R40H3540	R40H3541
	Ra	WG	15 " x 5 "	1252 - 346	R700346	R40H597	R40H9200	R40H3540	R40H3541
	Rm	WG	15 " x 4 "	4645A - 376	Discontinued	R40H597	R40H9200	R40H3518	R404148
	Rm	WG	15 " x 5 "	1252 - 346	R700346	R40H597	R40H9200	R40H3518	R404148
M1600, M1652, M1654 Metro Series, Forward Control RA30, 39, 127, 187, 189	Ra	WG	15 " x 5 "	1252 - 346	R700346	R40H597	R40H9200	R40H3540	R40H3541
	Rm	WG	15 " x 5 "	1252 - 346	R700346	R40H597	R40H9200	R40H3518	R404148
M1600, M1652, M1654 Metro Series, Forward Control RA39	Ra	WG	15 " x 6 "	4596 - 381	R700381	R40H597	R40H9200	R40H3540	R40H3541
M1600, M1652, M1654 Metro Series, Forward Control RA39, 189	Ra	WG	16 " x 6 "	1255 - 386	N/A	R40H597	R40H9200	NLA	NLA
	Rm	WG	16 " x 6 "	1255 - 386	N/A	R40H597	R40H9200	R404149	R404150
M1600, M1652, M1654 Metro Series, Forward Control RA44	Ra	WG	15 " x 7 "	4597 - 383	R700383	R40H597	R40H9200	R40H3540	R40H3541
1967 M1600, M1652, M1654 Metro Series, Forward Control FA209	Fa	WG	15 " x 3 "	1245C - 321	R700321	R40H521	R40H9237	R40H3502	R40H3503
	Fm	WG	15 " x 3 "	1245A - 235	R700235	R40H521	R40H9201	R40H3524	R40H3524
M1600, M1652, M1654 Metro Series, Forward Control FA69	Fa	WG	14 " x 2-1/2 "	1294A - 325	N/A	R40H521	R40H9237	R40H3502	R40H3503
	Fm	WG	14 " x 2-1/2 "	1294 - 296	N/A	R40H521	R40H9201	R40H3524	R40H3524
M1600, M1652, M1654 Metro Series, Forward Control FA73, 101	Fa	WG	15 " x 3-1/2 "	1280B - 322	R464004	R40H521	R40H9237	R40H3502	R40H3503

MERITOR DRUM OR ROTOR NO.	CALIPER OR CYLINDER BORE SIZE	MERITOR CALIPER OR WHEEL CYLINDER (LEFT)	MERITOR CALIPER OR WHEEL CYLINDER (RIGHT)	MERITOR CALIPER OR WHEEL CYLINDER REPAIR KIT	MERITOR CALIPER PISTON	MERITOR MASTER CYLINDER	MERITOR MASTER CYLINDER KIT	MERITOR BRAKE HOSE (LEFT)	MERITOR BRAKE HOSE (RIGHT)
									ITE(Cont.)
									160, 1600, 1650 SERIES(Cont.)
-	1-1/4 "	R4133581	R4133582	R4166923	NR	-	-	-	-
-	1-1/4 "	R4133581	R4133582	R4166923	NR	-	-	-	-
-	1-1/8 "	R4133714	R4133715	R4166926	NR	-	-	-	-
-	1-1/4 "	R4133581	R4133582	R4166923	NR	-	-	-	-
-	1-1/4 "	R4133581	R4133582	R4166923	NR	-	-	-	-
-	1-1/8 "	R4133320	R4133321	R4166926	NR	-	-	-	-
-	1-1/4 "	R4133581	R4133582	R4166923	NR	-	-	-	-
-	1-1/4 "	R4133581	R4133582	R4166923	NR	-	-	-	-
-	1-1/2 "	R4133580	R4133580	Discontinued	NR	-	-	-	-
-	1-5/8 "	R4133338	R4133338	R4166689	NR	-	-	-	-
-	1-1/2 "	R4133580	R4133580	Discontinued	NR	-	-	-	-
-	1-5/8 "	R4133338	R4133338	R4166689	NR	-	-	-	-
-	1-1/2 "	R4133580	R4133580	Discontinued	NR	-	-	-	-
-	1-1/2 "	R4133580	R4133580	Discontinued	NR	-	-	-	-
-	1-5/8 "	R4133338	R4133338	R4166689	NR	-	-	-	-
-	1-7/8 "	R4133584	R4133584	R4166897	NR	-	-	-	-
-	1-7/8 "	R4133584	R4133584	R4166897	NR	-	-	-	-
-	1-3/4 "	R4133400	R4133400	R4166917	NR	-	-	-	-
-	1-1/4 "	R4133581	R4133582	R4166923	NR	-	-	-	-
-	1-1/4 "	R4133581	R4133582	R4166923	NR	-	-	-	-
-	1-1/8 "	R4133714	R4133715	R4166926	NR	-	-	-	-
-	1-1/8 "	R4133714	R4133715	R4166926	NR	-	-	-	-
-	1-1/4 "	R4133581	R4133582	R4166923	NR	-	-	-	-

MAKE MODEL YEAR AXLE CODE AXLE WEIGHT	AXLE & BRK. TYPE	BRK. MFG.	BRAKE SIZE	FMSI	MERITOR DISC PAD OR BRAKE SHOE	MERITOR GUIDE PIN OR RETURN SPRING KIT	MERITOR CALIPER HWD. KIT OR RETURN SPRING KIT	MERITOR ADJUSTER KIT (LEFT WHEEL)	MERITOR ADJUSTER KIT (RIGHT WHEEL)
ITE(Cont.)									
160, 1600, 1650 SERIES(Cont.)									
1967									
	Fm	WG	15 " x 3-1/2 "	1280 - 463	R700463	R40H521	R40H9201	R40H3524	R40H3524
M1600, M1652, M1654 Metro Series, Forward Control									
FA73, 101, 109	Fa	WG	15 " x 3 "	1245C - 321	R700321	R40H521	R40H9237	R40H3502	R40H3503
	Fm	WG	15 " x 3 "	1245A - 235	R700235	R40H521	R40H9201	R40H3524	R40H3524
M1600, M1652, M1654 Metro Series, Forward Control									
FA74	Fa	WG	15 " x 3 "	1245C - 321	R700321	R40H521	R40H9237	R40H3502	R40H3503
	Fm	WG	15 " x 3 "	1245A - 235	R700235	R40H521	R40H9201	R40H3524	R40H3524
M1600, M1652, M1654 Metro Series, Forward Control									
FA78, 81	Fa	WG	15 " x 3 "	1245C - 321	R700321	R40H521	R40H9237	R40H3502	R40H3503
M1600, M1652, M1654 Metro Series, Forward Control									
FA99	Fa	WG	15 " x 3 "	1245C - 321	R700321	R40H521	R40H9237	R40H3502	R40H3503
	Fm	WG	15 " x 3 "	1245A - 235	R700235	R40H521	R40H9201	R40H3524	R40H3524
M1600, M1652, M1654 Metro Series, Forward Control									
RA25, 126, 184	Ra	WG	15 " x 4 "	4645A - 376	Discontinued	R40H597	R40H9200	R40H3540	R40H3541
	Ra	WG	15 " x 5 "	1252 - 346	R700346	R40H597	R40H9200	R40H3540	R40H3541
	Rm	WG	15 " x 4 "	4645A - 376	Discontinued	R40H597	R40H9200	R40H3518	R404148
	Rm	WG	15 " x 5 "	1252 - 346	R700346	R40H597	R40H9200	R40H3518	R404148
M1600, M1652, M1654 Metro Series, Forward Control									
RA30, 39, 127, 187, 189	Ra	WG	15 " x 5 "	1252 - 346	R700346	R40H597	R40H9200	R40H3540	R40H3541
	Rm	WG	15 " x 5 "	1252 - 346	R700346	R40H597	R40H9200	R40H3518	R404148
M1600, M1652, M1654 Metro Series, Forward Control									
RA39	Ra	WG	15 " x 6 "	4596 - 381	R700381	R40H597	R40H9200	R40H3540	R40H3541
M1600, M1652, M1654 Metro Series, Forward Control									
RA39, 189	Ra	WG	16 " x 6 "	1255 - 386	N/A	R40H597	R40H9200	NLA	NLA
	Rm	WG	16 " x 6 "	1255 - 386	N/A	R40H597	R40H9200	R404149	R404150
M1600, M1652, M1654 Metro Series, Forward Control									
RA44	Ra	WG	15 " x 7 "	4597 - 383	R700383	R40H597	R40H9200	R40H3540	R40H3541
1966									
M1600, M1652, M1654 Metro Series, Forward Control									
FA209	Fa	WG	15 " x 3 "	1245C - 321	R700321	R40H521	R40H9237	R40H3502	R40H3503
	Fm	WG	15 " x 3 "	1245A - 235	R700235	R40H521	R40H9201	R40H3524	R40H3524
M1600, M1652, M1654 Metro Series, Forward Control									
FA69	Fa	WG	14 " x 2-1/2 "	1294A - 325	N/A	R40H521	R40H9237	R40H3502	R40H3503
	Fm	WG	14 " x 2-1/2 "	1294 - 296	N/A	R40H521	R40H9201	R40H3524	R40H3524
M1600, M1652, M1654 Metro Series, Forward Control									
FA73, 101	Fa	WG	15 " x 3-1/2 "	1280B - 322	R464004	R40H521	R40H9237	R40H3502	R40H3503
	Fm	WG	15 " x 3-1/2 "	1280 - 463	R700463	R40H521	R40H9201	R40H3524	R40H3524
M1600, M1652, M1654 Metro Series, Forward Control									
FA73, 101, 109	Fa	WG	15 " x 3 "	1245C - 321	R700321	R40H521	R40H9237	R40H3502	R40H3503

MERITOR DRUM OR ROTOR NO.	CALIPER OR CYLINDER BORE SIZE	MERITOR CALIPER OR WHEEL CYLINDER (LEFT)	MERITOR CALIPER OR WHEEL CYLINDER (RIGHT)	MERITOR CALIPER OR WHEEL CYLINDER REPAIR KIT	MERITOR CALIPER PISTON	MERITOR MASTER CYLINDER	MERITOR MASTER CYLINDER KIT	MERITOR BRAKE HOSE (LEFT)	MERITOR BRAKE HOSE (RIGHT)
ITE(Cont.)									
160, 1600, 1650 SERIES(Cont.)									
-	1-1/4 "	R4133581	R4133582	R4166923	NR	-	-	-	-
-	1-1/4 "	R4133581	R4133582	R4166923	NR	-	-	-	-
-	1-1/8 "	R4133714	R4133715	R4166926	NR	-	-	-	-
-	1-1/4 "	R4133581	R4133582	R4166923	NR	-	-	-	-
-	1-1/4 "	R4133581	R4133582	R4166923	NR	-	-	-	-
-	1-1/8 "	R4133320	R4133321	R4166926	NR	-	-	-	-
-	1-1/4 "	R4133581	R4133582	R4166923	NR	-	-	-	-
-	1-1/4 "	R4133581	R4133582	R4166923	NR	-	-	-	-
-	1-1/2 "	R4133580	R4133580	Discontinued	NR	-	-	-	-
-	1-5/8 "	R4133338	R4133338	R4166689	NR	-	-	-	-
-	1-1/2 "	R4133580	R4133580	Discontinued	NR	-	-	-	-
-	1-5/8 "	R4133338	R4133338	R4166689	NR	-	-	-	-
-	1-1/2 "	R4133580	R4133580	Discontinued	NR	-	-	-	-
-	1-1/2 "	R4133580	R4133580	Discontinued	NR	-	-	-	-
-	1-5/8 "	R4133338	R4133338	R4166689	NR	-	-	-	-
-	1-7/8 "	R4133584	R4133584	R4166897	NR	-	-	-	-
-	1-7/8 "	R4133584	R4133584	R4166897	NR	-	-	-	-
-	1-3/4 "	R4133400	R4133400	R4166917	NR	-	-	-	-
-	1-1/4 "	R4133581	R4133582	R4166923	NR	-	-	-	-
-	1-1/4 "	R4133581	R4133582	R4166923	NR	-	-	-	-
-	1-1/8 "	R4133714	R4133715	R4166926	NR	-	-	-	-
-	1-1/8 "	R4133714	R4133715	R4166926	NR	-	-	-	-
-	1-1/4 "	R4133581	R4133582	R4166923	NR	-	-	-	-
-	1-1/4 "	R4133581	R4133582	R4166923	NR	-	-	-	-
-	1-1/4 "	R4133581	R4133582	R4166923	NR	-	-	-	-

MAKE MODEL YEAR AXLE CODE AXLE WEIGHT	AXLE & BRK. TYPE	BRK. MFG.	BRAKE SIZE	FMSI	MERITOR DISC PAD OR BRAKE SHOE	MERITOR GUIDE PIN OR RETURN SPRING KIT	MERITOR CALIPER HWD. KIT OR RETURN SPRING KIT	MERITOR ADJUSTER KIT (LEFT WHEEL)	MERITOR ADJUSTER KIT (RIGHT WHEEL)
ITE(Cont.)									
160, 1600, 1650 SERIES(Cont.)									
1966	Fm	WG	15 " x 3 "	1245A - 235	R700235	R40H521	R40H9201	R40H3524	R40H3524
M1600, M1652, M1654 Metro Series, Forward Control FA74	Fa	WG	15 " x 3 "	1245C - 321	R700321	R40H521	R40H9237	R40H3502	R40H3503
	Fm	WG	15 " x 3 "	1245A - 235	R700235	R40H521	R40H9201	R40H3524	R40H3524
M1600, M1652, M1654 Metro Series, Forward Control FA78, 81	Fa	WG	15 " x 3 "	1245C - 321	R700321	R40H521	R40H9237	R40H3502	R40H3503
M1600, M1652, M1654 Metro Series, Forward Control FA99	Fa	WG	15 " x 3 "	1245C - 321	R700321	R40H521	R40H9237	R40H3502	R40H3503
	Fm	WG	15 " x 3 "	1245A - 235	R700235	R40H521	R40H9201	R40H3524	R40H3524
M1600, M1652, M1654 Metro Series, Forward Control RA25, 126, 184	Ra	WG	15 " x 4 "	4645A - 376	Discontinued	R40H597	R40H9200	R40H3540	R40H3541
	Ra	WG	15 " x 5 "	1252 - 346	R700346	R40H597	R40H9200	R40H3540	R40H3541
	Rm	WG	15 " x 4 "	4645A - 376	Discontinued	R40H597	R40H9200	R40H3518	R404148
	Rm	WG	15 " x 5 "	1252 - 346	R700346	R40H597	R40H9200	R40H3518	R404148
M1600, M1652, M1654 Metro Series, Forward Control RA30, 39, 127, 187, 189	Ra	WG	15 " x 5 "	1252 - 346	R700346	R40H597	R40H9200	R40H3540	R40H3541
	Rm	WG	15 " x 5 "	1252 - 346	R700346	R40H597	R40H9200	R40H3518	R404148
M1600, M1652, M1654 Metro Series, Forward Control RA39	Ra	WG	15 " x 6 "	4596 - 381	R700381	R40H597	R40H9200	R40H3540	R40H3541
M1600, M1652, M1654 Metro Series, Forward Control RA39, 189	Ra	WG	16 " x 6 "	1255 - 386	N/A	R40H597	R40H9200	NLA	NLA
	Rm	WG	16 " x 6 "	1255 - 386	N/A	R40H597	R40H9200	R404149	R404150
M1600, M1652, M1654 Metro Series, Forward Control RA44	Ra	WG	15 " x 7 "	4597 - 383	R700383	R40H597	R40H9200	R40H3540	R40H3541
1965 M1600, M1652, M1654 Metro Series, Forward Control FA209	Fa	WG	15 " x 3 "	1245C - 321	R700321	R40H521	R40H9237	R40H3502	R40H3503
	Fm	WG	15 " x 3 "	1245A - 235	R700235	R40H521	R40H9201	R40H3524	R40H3524
M1600, M1652, M1654 Metro Series, Forward Control FA69	Fa	WG	14 " x 2-1/2 "	1294A - 325	N/A	R40H521	R40H9237	R40H3502	R40H3503
	Fm	WG	14 " x 2-1/2 "	1294 - 296	N/A	R40H521	R40H9201	R40H3524	R40H3524
M1600, M1652, M1654 Metro Series, Forward Control FA73, 101	Fa	WG	15 " x 3-1/2 "	1280B - 322	R464004	R40H521	R40H9237	R40H3502	R40H3503
	Fm	WG	15 " x 3-1/2 "	1280 - 463	R700463	R40H521	R40H9201	R40H3524	R40H3524
M1600, M1652, M1654 Metro Series, Forward Control FA73, 101, 109	Fa	WG	15 " x 3 "	1245C - 321	R700321	R40H521	R40H9237	R40H3502	R40H3503
	Fm	WG	15 " x 3 "	1245A - 235	R700235	R40H521	R40H9201	R40H3524	R40H3524
M1600, M1652, M1654 Metro Series, Forward Control FA74	Fa	WG	15 " x 3 "	1245C - 321	R700321	R40H521	R40H9237	R40H3502	R40H3503

MERITOR DRUM OR ROTOR NO.	CALIPER OR CYLINDER BORE SIZE	MERITOR CALIPER OR WHEEL CYLINDER (LEFT)	MERITOR CALIPER OR WHEEL CYLINDER (RIGHT)	MERITOR CALIPER OR WHEEL CYLINDER REPAIR KIT	MERITOR CALIPER PISTON	MERITOR MASTER CYLINDER	MERITOR MASTER CYLINDER KIT	MERITOR BRAKE HOSE (LEFT)	MERITOR BRAKE HOSE (RIGHT)
ITE(Cont.)									
160, 1600, 1650 SERIES(Cont.)									
-	1-1/8 "	R4133714	R4133715	R4166926	NR	-	-	-	-
-	1-1/4 "	R4133581	R4133582	R4166923	NR	-	-	-	-
-	1-1/4 "	R4133581	R4133582	R4166923	NR	-	-	-	-
-	1-1/8 "	R4133320	R4133321	R4166926	NR	-	-	-	-
-	1-1/4 "	R4133581	R4133582	R4166923	NR	-	-	-	-
-	1-1/4 "	R4133581	R4133582	R4166923	NR	-	-	-	-
- -	1-1/2 " 1-5/8 "	R4133580 R4133338	R4133580 R4133338	Discontinued R4166689	NR NR	- -	- -	- -	- -
- -	1-1/2 " 1-5/8 "	R4133580 R4133338	R4133580 R4133338	Discontinued R4166689	NR NR	- -	- -	- -	- -
-	1-1/2 "	R4133580	R4133580	Discontinued	NR	-	-	-	-
-	1-1/2 "	R4133580	R4133580	Discontinued	NR	-	-	-	-
-	1-5/8 "	R4133338	R4133338	R4166689	NR	-	-	-	-
-	1-7/8 "	R4133584	R4133584	R4166897	NR	-	-	-	-
-	1-7/8 "	R4133584	R4133584	R4166897	NR	-	-	-	-
-	1-3/4 "	R4133400	R4133400	R4166917	NR	-	-	-	-
-	1-1/4 "	R4133581	R4133582	R4166923	NR	-	-	-	-
-	1-1/4 "	R4133581	R4133582	R4166923	NR	-	-	-	-
-	1-1/8 "	R4133714	R4133715	R4166926	NR	-	-	-	-
-	1-1/8 "	R4133714	R4133715	R4166926	NR	-	-	-	-
-	1-1/4 "	R4133581	R4133582	R4166923	NR	-	-	-	-
-	1-1/4 "	R4133581	R4133582	R4166923	NR	-	-	-	-
-	1-1/4 "	R4133581	R4133582	R4166923	NR	-	-	-	-
-	1-1/8 "	R4133714	R4133715	R4166926	NR	-	-	-	-
-	1-1/4 "	R4133581	R4133582	R4166923	NR	-	-	-	-

MAKE MODEL YEAR AXLE CODE AXLE WEIGHT	AXLE & BRK. TYPE	BRK. MFG.	BRAKE SIZE	FMSI	MERITOR DISC PAD OR BRAKE SHOE	MERITOR GUIDE PIN OR RETURN SPRING KIT	MERITOR CALIPER HWD. KIT OR RETURN SPRING KIT	MERITOR ADJUSTER KIT (LEFT WHEEL)	MERITOR ADJUSTER KIT (RIGHT WHEEL)
ITE(Cont.)									
160, 1600, 1650 SERIES(Cont.)									
1965									
	Fm	WG	15 " x 3 "	1245A - 235	R700235	R40H521	R40H9201	R40H3524	R40H3524
M1600, M1652, M1654 Metro Series, Forward Control									
FA78, 81	Fa	WG	15 " x 3 "	1245C - 321	R700321	R40H521	R40H9237	R40H3502	R40H3503
M1600, M1652, M1654 Metro Series, Forward Control									
FA99	Fa	WG	15 " x 3 "	1245C - 321	R700321	R40H521	R40H9237	R40H3502	R40H3503
	Fm	WG	15 " x 3 "	1245A - 235	R700235	R40H521	R40H9201	R40H3524	R40H3524
M1600, M1652, M1654 Metro Series, Forward Control									
RA25, 126, 184	Ra	WG	15 " x 4 "	4645A - 376	Discontinued	R40H597	R40H9200	R40H3540	R40H3541
	Ra	WG	15 " x 5 "	1252 - 346	R700346	R40H597	R40H9200	R40H3540	R40H3541
	Rm	WG	15 " x 4 "	4645A - 376	Discontinued	R40H597	R40H9200	R40H3518	R404148
	Rm	WG	15 " x 5 "	1252 - 346	R700346	R40H597	R40H9200	R40H3518	R404148
M1600, M1652, M1654 Metro Series, Forward Control									
RA30, 39, 127, 187, 189	Ra	WG	15 " x 5 "	1252 - 346	R700346	R40H597	R40H9200	R40H3540	R40H3541
	Rm	WG	15 " x 5 "	1252 - 346	R700346	R40H597	R40H9200	R40H3518	R404148
M1600, M1652, M1654 Metro Series, Forward Control									
RA39	Ra	WG	15 " x 6 "	4596 - 381	R700381	R40H597	R40H9200	R40H3540	R40H3541
M1600, M1652, M1654 Metro Series, Forward Control									
RA39, 189	Ra	WG	16 " x 6 "	1255 - 386	N/A	R40H597	R40H9200	NLA	NLA
	Rm	WG	16 " x 6 "	1255 - 386	N/A	R40H597	R40H9200	R404149	R404150
M1600, M1652, M1654 Metro Series, Forward Control									
RA44	Ra	WG	15 " x 7 "	4597 - 383	R700383	R40H597	R40H9200	R40H3540	R40H3541
170, 1700, 1710, 1723, 1724, 1750, 1753, 1754 SERIES CONVENTIONAL CAB, SCHOOL BUS, TILT CAB									
1989 C1710, C1750 Cargostar Tilt Cab									
FA101	Fd	BX		7108 - D184	MD184	R40H5010	R40H5519	NR	NR
	Fd	BX		7108 - D184	MD184	R40H5010	R40H5519	NR	NR
	Fd	BX		7108 - D184	MD184	R40H5010	R40H5519	NR	NR
	Fd	BX		7108 - D184	MD184	R40H5010	R40H5519	NR	NR
	Fd	BX		7108 - D184	MD184	R40H5010	R40H5519	NR	NR
	Fd	BX		7108 - D184	MD184	R40H5010	R40H5519	NR	NR
C1710, C1750 Cargostar Tilt Cab									
FA309, 329, 339	Fd	BX		7142 - D225	MD225	R40H5010	R40H5522	NR	NR
	Fd	BX		7142 - D225	MD225	R40H5010	R40H5522	NR	NR
	Fd	BX		7142 - D225	MD225	R40H5010	R40H5522	NR	NR
	Fd	BX		7142 - D225	MD225	R40H5010	R40H5522	NR	NR
	Fd	BX		7142 - D225	MD225	R40H5010	R40H5522	NR	NR
	Fd	BX		7142 - D225	MD225	R40H5010	R40H5522	NR	NR
C1710, C1750 Cargostar Tilt Cab									
RA29, 30, 42, 44	Rd	BX		7142 - D225	MD225	R40H5010	R40H5522	NR	NR
	Rd	BX		7142 - D225	MD225	R40H5010	R40H5522	NR	NR
	Rd	BX		7142 - D225	MD225	R40H5010	R40H5522	NR	NR
	Rd	BX		7142 - D225	MD225	R40H5010	R40H5522	NR	NR
	Rd	BX		7142 - D225	MD225	R40H5010	R40H5522	NR	NR
	Rd	BX		7108 - D184	MD184	R40H5010	R40H5519	NR	NR
	Rd	BX		7142 - D225	MD225	R40H5010	R40H5522	NR	NR
	Rd	BX		7108 - D184	MD184	R40H5010	R40H5519	NR	NR

37 - Also available as a New unit
267 - 10 Stud, U Shaped
270 - 5 Stud, U Shape, .766 Dia. Studs
72 - Phenolic/Steel Face
268 - 5 Stud, Hat Shape
271 - 6 Stud, Hat Shape
266 - 10 Stud, Hat Shaped
269 - 5 Stud, U Shape
272 - 6 Stud, U Shape

MERITOR DRUM OR ROTOR NO.	CALIPER OR CYLINDER BORE SIZE	MERITOR CALIPER OR WHEEL CYLINDER (LEFT)	MERITOR CALIPER OR WHEEL CYLINDER (RIGHT)	MERITOR CALIPER OR WHEEL CYLINDER REPAIR KIT	MERITOR CALIPER PISTON	MERITOR MASTER CYLINDER	MERITOR MASTER CYLINDER KIT	MERITOR BRAKE HOSE (LEFT)	MERITOR BRAKE HOSE (RIGHT)
ITE(Cont.)									
160, 1600, 1650 SERIES(Cont.)									
-	1-1/4 "	R4133581	R4133582	R4166923	NR	-	-	-	-
-	1-1/8 "	R4133320	R4133321	R4166926	NR	-	-	-	-
-	1-1/4 "	R4133581	R4133582	R4166923	NR	-	-	-	-
-	1-1/4 "	R4133581	R4133582	R4166923	NR	-	-	-	-
- -	1-1/2 " 1-5/8 "	R4133580 R4133338	R4133580 R4133338	Discontinued R4166689	NR NR	- -	- -	- -	- -
- -	1-1/2 " 1-5/8 "	R4133580 R4133338	R4133580 R4133338	Discontinued R4166689	NR NR	- -	- -	- -	- -
-	1-1/2 "	R4133580	R4133580	Discontinued	NR	-	-	-	-
-	1-1/2 "	R4133580	R4133580	Discontinued	NR	-	-	-	-
-	1-5/8 "	R4133338	R4133338	R4166689	NR	-	-	-	-
-	1-7/8 "	R4133584	R4133584	R4166897	NR	-	-	-	-
-	1-7/8 "	R4133584	R4133584	R4166897	NR	-	-	-	-
-	1-3/4 "	R4133400	R4133400	R4166917	NR	-	-	-	-
170, 1700, 1710, 1723, 1724, 1750, 1753, 1754 SERIES CONVENTIONAL CAB, SCHOOL BUS, TILT CAB									
23-123552-004[266]	2-19/32 "	R42R55314	R42R55314[37]	R40107771	R4090100P[72]	-	-	-	-
23-123572-004[271]	2-19/32 "	R42R55314	R42R55314[37]	R40107771	R4090100P[72]	-	-	-	-
R44141476[268]	2-19/32 "	R42R55314	R42R55314[37]	R40107771	R4090100P[72]	-	-	-	-
23-122920-002[273]	2-19/32 "	R42R55314	R42R55314[37]	R40107771	R4090100P[72]	-	-	-	-
R44141858[275]	2-19/32 "	R42R55314	R42R55314[37]	R40107771	R4090100P[72]	-	-	-	-
23-122527-002[272]	2-19/32 "	R42R55314	R42R55314[37]	R40107771	R4090100P[72]	-	-	-	-
23-123572-004[271]	2-7/8 "	R42R55250	R42R55250[37]	R4066365	R4090096[72]	-	-	-	-
23-122920-002[273]	2-7/8 "	R42R55250	R42R55250[37]	R4066365	R4090096[72]	-	-	-	-
R44141858[275]	2-7/8 "	R42R55250	R42R55250[37]	R4066365	R4090096[72]	-	-	-	-
23-122527-002[272]	2-7/8 "	R42R55250	R42R55250[37]	R4066365	R4090096[72]	-	-	-	-
R44141476[268]	2-7/8 "	R42R55250	R42R55250[37]	R4066365	R4090096[72]	-	-	-	-
23-123552-004[266]	2-7/8 "	R42R55250	R42R55250[37]	R4066365	R4090096[72]	-	-	-	-
23-123552-004[266]	2-7/8 "	R42R55250	R42R55250[37]	R4066365	R4090096[72]	-	-	-	-
R44141629[269]	2-7/8 "	R42R55250	R42R55250[37]	R4066365	R4090096[72]	-	-	-	-
23-123572-004[271]	2-7/8 "	R42R55250	R42R55250[37]	R4066365	R4090096[72]	-	-	-	-
R44141608[267]	2-7/8 "	R42R55250	R42R55250[37]	R4066365	R4090096[72]	-	-	-	-
23-122527-002[272]	2-7/8 "	R42R55250	R42R55250[37]	R4066365	R4090096[72]	-	-	-	-
R44141628[269]	2-19/32 "	R42R55314	R42R55314[37]	R40107771	R4090100P[72]	-	-	-	-
R44141627[270]	2-7/8 "	R42R55250	R42R55250[37]	R4066365	R4090096[72]	-	-	-	-
R44141629[269]	2-19/32 "	R42R55314	R42R55314[37]	R40107771	R4090100P[72]	-	-	-	-

273 - 5 Stud, U Shape, .780 Dia. Studs

275 - 5 Stud, U Shape, .656 Dia. Studs

MAKE MODEL YEAR AXLE CODE AXLE WEIGHT	AXLE & BRK. TYPE	BRK. MFG.	BRAKE SIZE	FMSI	MERITOR DISC PAD OR BRAKE SHOE	MERITOR GUIDE PIN OR RETURN SPRING KIT	MERITOR CALIPER HWD. KIT OR RETURN SPRING KIT	MERITOR ADJUSTER KIT (LEFT WHEEL)	MERITOR ADJUSTER KIT (RIGHT WHEEL)
ITE(Cont.)									
170, 1700, 1710, 1723, 1724, 1750, 1753, 1754 SERIES CONVENTIONAL CAB, SCHOOL BUS, TILT CAB(Cont.)									
1989									
	Rd	BX		7108 - D184	MD184	R40H5010	R40H5519	NR	NR
	Rd	BX		7108 - D184	MD184	R40H5010	R40H5519	NR	NR
	Rd	BX		7142 - D225	MD225	R40H5010	R40H5522	NR	NR
	Rd	BX		7108 - D184	MD184	R40H5010	R40H5519	NR	NR
	Rd	BX		7108 - D184	MD184	R40H5010	R40H5519	NR	NR
S1723, S1753 School Bus	Fd	BX		7108 - D184	MD184	R40H5010	R40H5519	NR	NR
	Fd	BX		7108 - D184	MD184	R40H5010	R40H5519	NR	NR
	Fd	BX		7108 - D184	MD184	R40H5010	R40H5519	NR	NR
	Fd	BX		7108 - D184	MD184	R40H5010	R40H5519	NR	NR
	Fd	BX		7108 - D184	MD184	R40H5010	R40H5519	NR	NR
	Fd	BX		7108 - D184	MD184	R40H5010	R40H5519	NR	NR
	Fd	BX		7108 - D184	MD184	R40H5010	R40H5519	NR	NR
	Fd	BX		7108 - D184	MD184	R40H5010	R40H5519	NR	NR
	Fd	BX		7108 - D184	MD184	R40H5010	R40H5519	NR	NR
	Fd	BX		7108 - D184	MD184	R40H5010	R40H5519	NR	NR
S1723, S1753 School Bus FA101	Fd	BX		7108 - D184	MD184	R40H5010	R40H5519	NR	NR
	Fd	BX		7108 - D184	MD184	R40H5010	R40H5519	NR	NR
	Fd	BX		7108 - D184	MD184	R40H5010	R40H5519	NR	NR
	Fd	BX		7108 - D184	MD184	R40H5010	R40H5519	NR	NR
	Fd	BX		7108 - D184	MD184	R40H5010	R40H5519	NR	NR
	Fd	BX		7108 - D184	MD184	R40H5010	R40H5519	NR	NR
S1723, S1753 School Bus FA309, 329, 339	Fd	BX		7142 - D225	MD225	R40H5010	R40H5522	NR	NR
	Fd	BX		7142 - D225	MD225	R40H5010	R40H5522	NR	NR
	Fd	BX		7142 - D225	MD225	R40H5010	R40H5522	NR	NR
	Fd	BX		7142 - D225	MD225	R40H5010	R40H5522	NR	NR
	Fd	BX		7142 - D225	MD225	R40H5010	R40H5522	NR	NR
	Fd	BX		7142 - D225	MD225	R40H5010	R40H5522	NR	NR
	Fd	BX		7142 - D225	MD225	R40H5010	R40H5522	NR	NR
	Fd	BX		7142 - D225	MD225	R40H5010	R40H5522	NR	NR
	Fd	BX		7142 - D225	MD225	R40H5010	R40H5522	NR	NR
	Fd	BX		7142 - D225	MD225	R40H5010	R40H5522	NR	NR
	Fd	BX		7142 - D225	MD225	R40H5010	R40H5522	NR	NR
	Fd	BX		7142 - D225	MD225	R40H5010	R40H5522	NR	NR
	Fd	BX		7142 - D225	MD225	R40H5010	R40H5522	NR	NR
	Fd	BX		7142 - D225	MD225	R40H5010	R40H5522	NR	NR
	Fd	BX		7142 - D225	MD225	R40H5010	R40H5522	NR	NR
	Fd	BX		7142 - D225	MD225	R40H5010	R40H5522	NR	NR
	Fd	BX		7142 - D225	MD225	R40H5010	R40H5522	NR	NR
	Fd	BX		7142 - D225	MD225	R40H5010	R40H5522	NR	NR
	Fd	BX		7142 - D225	MD225	R40H5010	R40H5522	NR	NR
	Fd	BX		7142 - D225	MD225	R40H5010	R40H5522	NR	NR
	Fd	BX		7142 - D225	MD225	R40H5010	R40H5522	NR	NR
	Fd	BX		7142 - D225	MD225	R40H5010	R40H5522	NR	NR
	Fd	BX		7142 - D225	MD225	R40H5010	R40H5522	NR	NR
	Fd	BX		7142 - D225	MD225	R40H5010	R40H5522	NR	NR
	Fd	BX		7142 - D225	MD225	R40H5010	R40H5522	NR	NR
	Fd	BX		7142 - D225	MD225	R40H5010	R40H5522	NR	NR
	Fd	BX		7142 - D225	MD225	R40H5010	R40H5522	NR	NR
	Fd	BX		7142 - D225	MD225	R40H5010	R40H5522	NR	NR
	Fd	BX		7142 - D225	MD225	R40H5010	R40H5522	NR	NR
	Fd	BX		7142 - D225	MD225	R40H5010	R40H5522	NR	NR
	Fd	BX		7142 - D225	MD225	R40H5010	R40H5522	NR	NR
	Fd	BX		7142 - D225	MD225	R40H5010	R40H5522	NR	NR
	Fd	BX		7142 - D225	MD225	R40H5010	R40H5522	NR	NR
	Fd	BX		7142 - D225	MD225	R40H5010	R40H5522	NR	NR
	Fd	BX		7142 - D225	MD225	R40H5010	R40H5522	NR	NR
	Fd	BX		7142 - D225	MD225	R40H5010	R40H5522	NR	NR
	Fd	BX		7142 - D225	MD225	R40H5010	R40H5522	NR	NR
	Fd	BX		7142 - D225	MD225	R40H5010	R40H5522	NR	NR
	Fd	BX		7142 - D225	MD225	R40H5010	R40H5522	NR	NR
	Fd	BX		7142 - D225	MD225	R40H5010	R40H5522	NR	NR
	Fd	BX		7142 - D225	MD225	R40H5010	R40H5522	NR	NR
	Fd	BX		7142 - D225	MD225	R40H5010	R40H5522	NR	NR
	Fd	BX		7142 - D225	MD225	R40H5010	R40H5522	NR	NR
	Fd	BX		7142 - D225	MD225	R40H5010	R40H5522	NR	NR
	Fd	BX		7142 - D225	MD225	R40H5010	R40H5522	NR	NR
	Fd	BX		7142 - D225	MD225	R40H5010	R40H5522	NR	NR
	Fd	BX		7142 - D225	MD225	R40H5010	R40H5522	NR	NR
	Fd	BX		7142 - D225	MD225	R40H5010	R40H5522	NR	NR
	Fd	BX		7142 - D225	MD225	R40H5010	R40H5522	NR	NR
	Fd	BX		7142 - D225	MD225	R40H5010	R40H5522	NR	NR
S1723, S1753 School Bus FA73	Fd	BX		7108 - D184	MD184	R40H5010	R40H5519	NR	NR
	Fd	BX		7108 - D184	MD184	R40H5010	R40H5519	NR	NR
S1723, S1753 School Bus RA29, 30, 42, 44	Rd	BX		7142 - D225	MD225	R40H5010	R40H5522	NR	NR

37 - Also available as a New unit
266 - 10 Stud, Hat Shaped
269 - 5 Stud, U Shape
72 - Phenolic/Steel Face
267 - 10 Stud, U Shaped
270 - 5 Stud, U Shape, .766 Dia. Studs
201 - Steel Piston
268 - 5 Stud, Hat Shape
271 - 6 Stud, Hat Shape

MERITOR DRUM OR ROTOR NO.	CALIPER OR CYLINDER BORE SIZE	MERITOR CALIPER OR WHEEL CYLINDER (LEFT)	MERITOR CALIPER OR WHEEL CYLINDER (RIGHT)	MERITOR CALIPER OR WHEEL CYLINDER REPAIR KIT	MERITOR CALIPER PISTON	MERITOR MASTER CYLINDER	MERITOR MASTER CYLINDER KIT	MERITOR BRAKE HOSE (LEFT)	MERITOR BRAKE HOSE (RIGHT)
ITE(Cont.)									
170, 1700, 1710, 1723, 1724, 1750, 1753, 1754 SERIES CONVENTIONAL CAB, SCHOOL BUS, TILT CAB(Cont.)									
R44141608[267]	2-19/32 "	R42R55314	R42R55314[37]	R40107771	R4090100P[72]	-	-	-	-
23-123572-004[271]	2-19/32 "	R42R55314	R42R55314[37]	R40107771	R4090100P[72]	-	-	-	-
R44141628[269]	2-7/8 "	R42R55250	R42R55250[37]	R4066365	R4090096[72]	-	-	-	-
23-123552-004[266]	2-19/32 "	R42R55314	R42R55314[37]	R40107771	R4090100P[72]	-	-	-	-
R44141627[270]	2-19/32 "	R42R55314	R42R55314[37]	R40107771	R4090100P[72]	-	-	-	-
R44141476[268]	3-3/8 "	R42R55099	R42R55098[37]	R4066780	R4090021[201]	-	-	-	-
R44141858[275]	3-3/8 "	R42R55099	R42R55098[37]	R4066780	R4090021[201]	-	-	-	-
23-123572-004[271]	3-3/8 "	R42R55099	R42R55098[37]	R4066780	R4090021[201]	-	-	-	-
R44141858[275]	3-3/8 "	R42R55099	R42R55098[37]	R4066780	R4090021[201]	-	-	-	-
23-123572-004[271]	3-3/8 "	R42R55099	R42R55098[37]	R4066780	R4090021[201]	-	-	-	-
23-122920-002[273]	3-3/8 "	R42R55099	R42R55098[37]	R4066780	R4090021[201]	-	-	-	-
R44141476[268]	3-3/8 "	R42R55099	R42R55098[37]	R4066780	R4090021[201]	-	-	-	-
23-123552-004[266]	3-3/8 "	R42R55099	R42R55098[37]	R4066780	R4090021[201]	-	-	-	-
23-123552-004[266]	3-3/8 "	R42R55099	R42R55098[37]	R4066780	R4090021[201]	-	-	-	-
23-122920-002[273]	3-3/8 "	R42R55099	R42R55098[37]	R4066780	R4090021[201]	-	-	-	-
R44141476[268]	2-19/32 "	R42R55314	R42R55314[37]	R40107771	R4090100P[72]	-	-	-	-
23-122920-002[273]	2-19/32 "	R42R55314	R42R55314[37]	R40107771	R4090100P[72]	-	-	-	-
R44141858[275]	2-19/32 "	R42R55314	R42R55314[37]	R40107771	R4090100P[72]	-	-	-	-
23-123552-004[266]	2-19/32 "	R42R55314	R42R55314[37]	R40107771	R4090100P[72]	-	-	-	-
23-122527-002[272]	2-19/32 "	R42R55314	R42R55314[37]	R40107771	R4090100P[72]	-	-	-	-
23-123572-004[271]	2-19/32 "	R42R55314	R42R55314[37]	R40107771	R4090100P[72]	-	-	-	-
23-122527-002[272]	2-7/8 "	R42R55250	R42R55250[37]	R4066365	R4090096[72]	-	-	-	-
R44141858[275]	2-7/8 "	R42R55250	R42R55250[37]	R4066365	R4090096[72]	-	-	-	-
23-122527-002[272]	2-7/8 "	R42R55250	R42R55250[37]	R4066365	R4090096[72]	-	-	-	-
23-122920-002[273]	2-7/8 "	R42R55250	R42R55250[37]	R4066365	R4090096[72]	-	-	-	-
23-122920-002[273]	2-7/8 "	R42R55250	R42R55250[37]	R4066365	R4090096[72]	-	-	-	-
23-122527-002[272]	2-7/8 "	R42R55250	R42R55250[37]	R4066365	R4090096[72]	-	-	-	-
R44141858[275]	2-7/8 "	R42R55250	R42R55250[37]	R4066365	R4090096[72]	-	-	-	-
23-123552-004[266]	2-7/8 "	R42R55250	R42R55250[37]	R4066365	R4090096[72]	-	-	-	-
R44141858[275]	2-7/8 "	R42R55250	R42R55250[37]	R4066365	R4090096[72]	-	-	-	-
R44141476[268]	2-7/8 "	R42R55250	R42R55250[37]	R4066365	R4090096[72]	-	-	-	-
R44141476[268]	2-7/8 "	R42R55250	R42R55250[37]	R4066365	R4090096[72]	-	-	-	-
R44141476[268]	2-7/8 "	R42R55250	R42R55250[37]	R4066365	R4090096[72]	-	-	-	-
R44141476[268]	2-7/8 "	R42R55250	R42R55250[37]	R4066365	R4090096[72]	-	-	-	-
23-123572-004[271]	2-7/8 "	R42R55250	R42R55250[37]	R4066365	R4090096[72]	-	-	-	-
23-123552-004[266]	2-7/8 "	R42R55250	R42R55250[37]	R4066365	R4090096[72]	-	-	-	-
23-123552-004[266]	2-7/8 "	R42R55250	R42R55250[37]	R4066365	R4090096[72]	-	-	-	-
23-123572-004[271]	2-7/8 "	R42R55250	R42R55250[37]	R4066365	R4090096[72]	-	-	-	-
23-123572-004[271]	2-7/8 "	R42R55250	R42R55250[37]	R4066365	R4090096[72]	-	-	-	-
R44141858[275]	2-7/8 "	R42R55250	R42R55250[37]	R4066365	R4090096[72]	-	-	-	-
23-122527-002[272]	2-7/8 "	R42R55250	R42R55250[37]	R4066365	R4090096[72]	-	-	-	-
R44141858[275]	2-7/8 "	R42R55250	R42R55250[37]	R4066365	R4090096[72]	-	-	-	-
R44141476[268]	2-7/8 "	R42R55250	R42R55250[37]	R4066365	R4090096[72]	-	-	-	-
R44141476[268]	2-7/8 "	R42R55250	R42R55250[37]	R4066365	R4090096[72]	-	-	-	-
23-123572-004[271]	2-7/8 "	R42R55250	R42R55250[37]	R4066365	R4090096[72]	-	-	-	-
23-122527-002[272]	2-7/8 "	R42R55250	R42R55250[37]	R4066365	R4090096[72]	-	-	-	-
23-123552-004[266]	2-7/8 "	R42R55250	R42R55250[37]	R4066365	R4090096[72]	-	-	-	-
23-123552-004[266]	2-7/8 "	R42R55250	R42R55250[37]	R4066365	R4090096[72]	-	-	-	-
23-122920-002[273]	2-7/8 "	R42R55250	R42R55250[37]	R4066365	R4090096[72]	-	-	-	-
23-123572-004[271]	2-7/8 "	R42R55250	R42R55250[37]	R4066365	R4090096[72]	-	-	-	-
23-123572-004[271]	2-7/8 "	R42R55250	R42R55250[37]	R4066365	R4090096[72]	-	-	-	-
23-122920-002[273]	2-7/8 "	R42R55250	R42R55250[37]	R4066365	R4090096[72]	-	-	-	-
23-122527-002[272]	2-7/8 "	R42R55250	R42R55250[37]	R4066365	R4090096[72]	-	-	-	-
R44141858[275]	2-7/8 "	R42R55250	R42R55250[37]	R4066365	R4090096[72]	-	-	-	-
23-122920-002[273]	2-7/8 "	R42R55250	R42R55250[37]	R4066365	R4090096[72]	-	-	-	-
23-123552-004[266]	2-7/8 "	R42R55250	R42R55250[37]	R4066365	R4090096[72]	-	-	-	-
23-122527-002[272]	3-3/8 "	R42R55099	R42R55098[37]	R4066780	R4090021[201]	-	-	-	-
23-122527-002[272]	3-3/8 "	R42R55099	R42R55098[37]	R4066780	R4090021[201]	-	-	-	-
R44141627[270]	2-7/8 "	R42R55250	R42R55250[37]	R4066365	R4090096[72]	-	-	-	-

272 - 6 Stud, U Shape

273 - 5 Stud, U Shape, .780 Dia. Studs

275 - 5 Stud, U Shape, .656 Dia. Studs

MAKE MODEL YEAR AXLE CODE AXLE WEIGHT	AXLE & BRK. TYPE	BRK. MFG.	BRAKE SIZE	FMSI	MERITOR DISC PAD OR BRAKE SHOE	MERITOR GUIDE PIN OR RETURN SPRING KIT	MERITOR CALIPER HWD. KIT OR RETURN SPRING KIT	MERITOR ADJUSTER KIT (LEFT WHEEL)	MERITOR ADJUSTER KIT (RIGHT WHEEL)
ITE(Cont.)									
170, 1700, 1710, 1723, 1724, 1750, 1753, 1754 SERIES CONVENTIONAL CAB, SCHOOL BUS, TILT CAB(Cont.)									
1989									
S1723, S1753 School Bus									
RA29, 30, 42, 44	Rd	BX		7142 - D225	MD225	R40H5010	R40H5522	NR	NR
	Rd	BX		7142 - D225	MD225	R40H5010	R40H5522	NR	NR
	Rd	BX		7108 - D184	MD184	R40H5010	R40H5519	NR	NR
	Rd	BX		7142 - D225	MD225	R40H5010	R40H5522	NR	NR
	Rd	BX		7142 - D225	MD225	R40H5010	R40H5522	NR	NR
	Rd	BX		7108 - D184	MD184	R40H5010	R40H5519	NR	NR
	Rd	BX		7142 - D225	MD225	R40H5010	R40H5522	NR	NR
	Rd	BX		7142 - D225	MD225	R40H5010	R40H5522	NR	NR
	Rd	BX		7142 - D225	MD225	R40H5010	R40H5522	NR	NR
	Rd	BX		7142 - D225	MD225	R40H5010	R40H5522	NR	NR
	Rd	BX		7108 - D184	MD184	R40H5010	R40H5519	NR	NR
	Rd	BX		7108 - D184	MD184	R40H5010	R40H5519	NR	NR
	Rd	BX		7142 - D225	MD225	R40H5010	R40H5522	NR	NR
	Rd	BX		7142 - D225	MD225	R40H5010	R40H5522	NR	NR
	Rd	BX		7108 - D184	MD184	R40H5010	R40H5519	NR	NR
	Rd	BX		7108 - D184	MD184	R40H5010	R40H5519	NR	NR
	Rd	BX		7142 - D225	MD225	R40H5010	R40H5522	NR	NR
	Rd	BX		7108 - D184	MD184	R40H5010	R40H5519	NR	NR
	Rd	BX		7142 - D225	MD225	R40H5010	R40H5522	NR	NR
	Rd	BX		7142 - D225	MD225	R40H5010	R40H5522	NR	NR
	Rd	BX		7108 - D184	MD184	R40H5010	R40H5519	NR	NR
	Rd	BX		7108 - D184	MD184	R40H5010	R40H5519	NR	NR
	Rd	BX		7108 - D184	MD184	R40H5010	R40H5519	NR	NR
	Rd	BX		7108 - D184	MD184	R40H5010	R40H5519	NR	NR
	Rd	BX		7142 - D225	MD225	R40H5010	R40H5522	NR	NR
	Rd	BX		7142 - D225	MD225	R40H5010	R40H5522	NR	NR
	Rd	BX		7142 - D225	MD225	R40H5010	R40H5522	NR	NR
	Rd	BX		7108 - D184	MD184	R40H5010	R40H5519	NR	NR
	Rd	BX		7108 - D184	MD184	R40H5010	R40H5519	NR	NR
	Rd	BX		7142 - D225	MD225	R40H5010	R40H5522	NR	NR
	Rd	BX		7142 - D225	MD225	R40H5010	R40H5522	NR	NR
	Rd	BX		7108 - D184	MD184	R40H5010	R40H5519	NR	NR
	Rd	BX		7108 - D184	MD184	R40H5010	R40H5519	NR	NR
	Rd	BX		7108 - D184	MD184	R40H5010	R40H5519	NR	NR
	Rd	BX		7108 - D184	MD184	R40H5010	R40H5519	NR	NR
	Rd	BX		7142 - D225	MD225	R40H5010	R40H5522	NR	NR
	Rd	BX		7108 - D184	MD184	R40H5010	R40H5519	NR	NR
	Rd	BX		7142 - D225	MD225	R40H5010	R40H5522	NR	NR
S1724, S1754 Conventional	Fd	BX		7108 - D184	MD184	R40H5010	R40H5519	NR	NR
	Fd	BX		7108 - D184	MD184	R40H5010	R40H5519	NR	NR
	Fd	BX		7108 - D184	MD184	R40H5010	R40H5519	NR	NR
	Fd	BX		7108 - D184	MD184	R40H5010	R40H5519	NR	NR
	Fd	BX		7108 - D184	MD184	R40H5010	R40H5519	NR	NR
	Fd	BX		7108 - D184	MD184	R40H5010	R40H5519	NR	NR
	Fd	BX		7108 - D184	MD184	R40H5010	R40H5519	NR	NR
	Fd	BX		7108 - D184	MD184	R40H5010	R40H5519	NR	NR
	Fd	BX		7108 - D184	MD184	R40H5010	R40H5519	NR	NR
	Fd	BX		7108 - D184	MD184	R40H5010	R40H5519	NR	NR
S1724, S1754 Conventional									
FA101	Fd	BX		7108 - D184	MD184	R40H5010	R40H5519	NR	NR
	Fd	BX		7108 - D184	MD184	R40H5010	R40H5519	NR	NR
	Fd	BX		7108 - D184	MD184	R40H5010	R40H5519	NR	NR
	Fd	BX		7108 - D184	MD184	R40H5010	R40H5519	NR	NR
	Fd	BX		7108 - D184	MD184	R40H5010	R40H5519	NR	NR
	Fd	BX		7108 - D184	MD184	R40H5010	R40H5519	NR	NR
S1724, S1754 Conventional									
FA309, 329, 339	Fd	BX		7142 - D225	MD225	R40H5010	R40H5522	NR	NR
	Fd	BX		7142 - D225	MD225	R40H5010	R40H5522	NR	NR
	Fd	BX		7142 - D225	MD225	R40H5010	R40H5522	NR	NR
	Fd	BX		7142 - D225	MD225	R40H5010	R40H5522	NR	NR
	Fd	BX		7142 - D225	MD225	R40H5010	R40H5522	NR	NR
	Fd	BX		7142 - D225	MD225	R40H5010	R40H5522	NR	NR

37 - Also available as a New unit

38 - First design, may have external joining tube and uses steel pistons

72 - Phenolic/Steel Face

201 - Steel Piston

266 - 10 Stud, Hat Shaped

267 - 10 Stud, U Shaped

268 - 5 Stud, Hat Shape

269 - 5 Stud, U Shape

270 - 5 Stud, U Shape, .766 Dia. Studs

MERITOR DRUM OR ROTOR NO.	CALIPER OR CYLINDER BORE SIZE	MERITOR CALIPER OR WHEEL CYLINDER (LEFT)	MERITOR CALIPER OR WHEEL CYLINDER (RIGHT)	MERITOR CALIPER OR WHEEL CYLINDER REPAIR KIT	MERITOR CALIPER PISTON	MERITOR MASTER CYLINDER	MERITOR MASTER CYLINDER KIT	MERITOR BRAKE HOSE (LEFT)	MERITOR BRAKE HOSE (RIGHT)
ITE(Cont.)									
170, 1700, 1710, 1723, 1724, 1750, 1753, 1754 SERIES CONVENTIONAL CAB, SCHOOL BUS, TILT CAB(Cont.)									
23-123552-004[266]	2-7/8 "	R42R55250	R42R55250[37]	R4066365	R4090096[72]	-	-	-	-
23-122527-002[272]	2-7/8 "	R42R55250	R42R55250[37]	R4066365	R4090096[72]	-	-	-	-
R44141627[270]	2-19/32 "	R42R55245	R42R55245[38]	R402235118	R402238231[201]	-	-	-	-
23-122527-002[272]	2-7/8 "	R42R55250	R42R55250[37]	R4066365	R4090096[72]	-	-	-	-
R44141629[269]	2-7/8 "	R42R55250	R42R55250[37]	R4066365	R4090096[72]	-	-	-	-
R44141608[267]	2-19/32 "	R42R55245	R42R55245[38]	R402235118	R402238231[201]	-	-	-	-
R44141629[269]	2-7/8 "	R42R55250	R42R55250[37]	R4066365	R4090096[72]	-	-	-	-
23-122527-002[272]	2-7/8 "	R42R55250	R42R55250[37]	R4066365	R4090096[72]	-	-	-	-
R44141608[267]	2-7/8 "	R42R55250	R42R55250[37]	R4066365	R4090096[72]	-	-	-	-
R44141627[270]	2-7/8 "	R42R55250	R42R55250[37]	R4066365	R4090096[72]	-	-	-	-
R44141628[269]	2-19/32 "	R42R55314	R42R55314[37]	R40107771	R4090100P[72]	-	-	-	-
23-123572-004[271]	2-19/32 "	R42R55314	R42R55314[37]	R40107771	R4090100P[72]	-	-	-	-
R44141627[270]	2-7/8 "	R42R55250	R42R55250[37]	R4066365	R4090096[72]	-	-	-	-
23-123572-004[271]	2-7/8 "	R42R55250	R42R55250[37]	R4066365	R4090096[72]	-	-	-	-
R44141629[269]	2-19/32 "	R42R55314	R42R55314[37]	R40107771	R4090100P[72]	-	-	-	-
R44141627[270]	2-19/32 "	R42R55245	R42R55245[38]	R402235118	R402238231[201]	-	-	-	-
23-123572-004[271]	2-7/8 "	R42R55250	R42R55250[37]	R4066365	R4090096[72]	-	-	-	-
23-122527-002[272]	2-19/32 "	R42R55245	R42R55245[38]	R402235118	R402238231[201]	-	-	-	-
R44141608[267]	2-7/8 "	R42R55250	R42R55250[37]	R4066365	R4090096[72]	-	-	-	-
R44141628[269]	2-7/8 "	R42R55250	R42R55250[37]	R4066365	R4090096[72]	-	-	-	-
R44141627[270]	2-19/32 "	R42R55245	R42R55245[38]	R402235118	R402238231[201]	-	-	-	-
R44141627[270]	2-19/32 "	R42R55314	R42R55314[37]	R40107771	R4090100P[72]	-	-	-	-
23-123552-004[266]	2-19/32 "	R42R55314	R42R55314[37]	R40107771	R4090100P[72]	-	-	-	-
R44141629[269]	2-19/32 "	R42R55245	R42R55245[38]	R402235118	R402238231[201]	-	-	-	-
R44141629[269]	2-7/8 "	R42R55250	R42R55250[37]	R4066365	R4090096[72]	-	-	-	-
R44141628[269]	2-7/8 "	R42R55250	R42R55250[37]	R4066365	R4090096[72]	-	-	-	-
R44141608[267]	2-7/8 "	R42R55250	R42R55250[37]	R4066365	R4090096[72]	-	-	-	-
R44141627[270]	2-19/32 "	R42R55245	R42R55245[38]	R402235118	R402238231[201]	-	-	-	-
23-123572-004[271]	2-19/32 "	R42R55245	R42R55245[38]	R402235118	R402238231[201]	-	-	-	-
R44141628[269]	2-7/8 "	R42R55250	R42R55250[37]	R4066365	R4090096[72]	-	-	-	-
23-123572-004[271]	2-7/8 "	R42R55250	R42R55250[37]	R4066365	R4090096[72]	-	-	-	-
R44141627[270]	2-19/32 "	R42R55245	R42R55245[38]	R402235118	R402238231[201]	-	-	-	-
R44141628[269]	2-19/32 "	R42R55245	R42R55245[38]	R402235118	R402238231[201]	-	-	-	-
23-123552-004[266]	2-19/32 "	R42R55245	R42R55245[38]	R402235118	R402238231[201]	-	-	-	-
R44141608[267]	2-19/32 "	R42R55314	R42R55314[37]	R40107771	R4090100P[72]	-	-	-	-
23-123552-004[266]	2-7/8 "	R42R55250	R42R55250[37]	R4066365	R4090096[72]	-	-	-	-
R44141627[270]	2-19/32 "	R42R55245	R42R55245[38]	R402235118	R402238231[201]	-	-	-	-
23-123552-004[266]	2-7/8 "	R42R55250	R42R55250[37]	R4066365	R4090096[72]	-	-	-	-
23-123552-004[266]	3-3/8 "	R42R55099	R42R55098[37]	R4066780	R4090021[201]	-	-	-	-
23-123572-004[271]	3-3/8 "	R42R55099	R42R55098[37]	R4066780	R4090021[201]	-	-	-	-
R44141858[275]	3-3/8 "	R42R55099	R42R55098[37]	R4066780	R4090021[201]	-	-	-	-
R44141476[268]	3-3/8 "	R42R55099	R42R55098[37]	R4066780	R4090021[201]	-	-	-	-
23-123572-004[271]	3-3/8 "	R42R55099	R42R55098[37]	R4066780	R4090021[201]	-	-	-	-
R44141476[268]	3-3/8 "	R42R55099	R42R55098[37]	R4066780	R4090021[201]	-	-	-	-
23-122920-002[273]	3-3/8 "	R42R55099	R42R55098[37]	R4066780	R4090021[201]	-	-	-	-
23-123552-004[266]	3-3/8 "	R42R55099	R42R55098[37]	R4066780	R4090021[201]	-	-	-	-
R44141858[275]	3-3/8 "	R42R55099	R42R55098[37]	R4066780	R4090021[201]	-	-	-	-
23-122920-002[273]	3-3/8 "	R42R55099	R42R55098[37]	R4066780	R4090021[201]	-	-	-	-
23-123552-004[266]	2-19/32 "	R42R55314	R42R55314[37]	R40107771	R4090100P[72]	-	-	-	-
23-122920-002[273]	2-19/32 "	R42R55314	R42R55314[37]	R40107771	R4090100P[72]	-	-	-	-
R44141476[268]	2-19/32 "	R42R55314	R42R55314[37]	R40107771	R4090100P[72]	-	-	-	-
23-122527-002[272]	2-19/32 "	R42R55314	R42R55314[37]	R40107771	R4090100P[72]	-	-	-	-
R44141858[275]	2-19/32 "	R42R55314	R42R55314[37]	R40107771	R4090100P[72]	-	-	-	-
23-123572-004[271]	2-19/32 "	R42R55314	R42R55314[37]	R40107771	R4090100P[72]	-	-	-	-
23-123572-004[271]	2-7/8 "	R42R55250	R42R55250[37]	R4066365	R4090096[72]	-	-	-	-
23-122920-002[273]	2-7/8 "	R42R55250	R42R55250[37]	R4066365	R4090096[72]	-	-	-	-
R44141476[268]	2-7/8 "	R42R55250	R42R55250[37]	R4066365	R4090096[72]	-	-	-	-
R44141476[268]	2-7/8 "	R42R55250	R42R55250[37]	R4066365	R4090096[72]	-	-	-	-
23-122920-002[273]	2-7/8 "	R42R55250	R42R55250[37]	R4066365	R4090096[72]	-	-	-	-
23-123552-004[266]	2-7/8 "	R42R55250	R42R55250[37]	R4066365	R4090096[72]	-	-	-	-

271 - 6 Stud, Hat Shape

272 - 6 Stud, U Shape

273 - 5 Stud, U Shape, .780 Dia. Studs

275 - 5 Stud, U Shape, .656 Dia. Studs

MAKE MODEL YEAR AXLE CODE AXLE WEIGHT	AXLE & BRK. TYPE	BRK. MFG.	BRAKE SIZE	FMSI	MERITOR DISC PAD OR BRAKE SHOE	MERITOR GUIDE PIN OR RETURN SPRING KIT	MERITOR CALIPER HWD. KIT OR RETURN SPRING KIT	MERITOR ADJUSTER KIT (LEFT WHEEL)	MERITOR ADJUSTER KIT (RIGHT WHEEL)
ITE(Cont.)									
170, 1700, 1710, 1723, 1724, 1750, 1753, 1754 SERIES CONVENTIONAL CAB, SCHOOL BUS, TILT CAB(Cont.)									
1989									
	Fd	BX		7142 - D225	MD225	R40H5010	R40H5522	NR	NR
	Fd	BX		7142 - D225	MD225	R40H5010	R40H5522	NR	NR
	Fd	BX		7142 - D225	MD225	R40H5010	R40H5522	NR	NR
	Fd	BX		7142 - D225	MD225	R40H5010	R40H5522	NR	NR
	Fd	BX		7142 - D225	MD225	R40H5010	R40H5522	NR	NR
	Fd	BX		7142 - D225	MD225	R40H5010	R40H5522	NR	NR
	Fd	BX		7142 - D225	MD225	R40H5010	R40H5522	NR	NR
	Fd	BX		7142 - D225	MD225	R40H5010	R40H5522	NR	NR
	Fd	BX		7142 - D225	MD225	R40H5010	R40H5522	NR	NR
	Fd	BX		7142 - D225	MD225	R40H5010	R40H5522	NR	NR
	Fd	BX		7142 - D225	MD225	R40H5010	R40H5522	NR	NR
	Fd	BX		7142 - D225	MD225	R40H5010	R40H5522	NR	NR
	Fd	BX		7142 - D225	MD225	R40H5010	R40H5522	NR	NR
	Fd	BX		7142 - D225	MD225	R40H5010	R40H5522	NR	NR
	Fd	BX		7142 - D225	MD225	R40H5010	R40H5522	NR	NR
	Fd	BX		7142 - D225	MD225	R40H5010	R40H5522	NR	NR
	Fd	BX		7142 - D225	MD225	R40H5010	R40H5522	NR	NR
	Fd	BX		7142 - D225	MD225	R40H5010	R40H5522	NR	NR
	Fd	BX		7142 - D225	MD225	R40H5010	R40H5522	NR	NR
	Fd	BX		7142 - D225	MD225	R40H5010	R40H5522	NR	NR
	Fd	BX		7142 - D225	MD225	R40H5010	R40H5522	NR	NR
	Fd	BX		7142 - D225	MD225	R40H5010	R40H5522	NR	NR
	Fd	BX		7142 - D225	MD225	R40H5010	R40H5522	NR	NR
	Fd	BX		7142 - D225	MD225	R40H5010	R40H5522	NR	NR
	Fd	BX		7142 - D225	MD225	R40H5010	R40H5522	NR	NR
	Fd	BX		7142 - D225	MD225	R40H5010	R40H5522	NR	NR
	Fd	BX		7142 - D225	MD225	R40H5010	R40H5522	NR	NR
	Fd	BX		7142 - D225	MD225	R40H5010	R40H5522	NR	NR
S1724, S1754 Conventional FA73									
	Fd	BX		7108 - D184	MD184	R40H5010	R40H5519	NR	NR
	Fd	BX		7108 - D184	MD184	R40H5010	R40H5519	NR	NR
S1724, S1754 Conventional RA29, 30, 42, 44									
	Rd	BX		7142 - D225	MD225	R40H5010	R40H5522	NR	NR
	Rd	BX		7108 - D184	MD184	R40H5010	R40H5519	NR	NR
	Rd	BX		7108 - D184	MD184	R40H5010	R40H5519	NR	NR
	Rd	BX		7142 - D225	MD225	R40H5010	R40H5522	NR	NR
	Rd	BX		7142 - D225	MD225	R40H5010	R40H5522	NR	NR
	Rd	BX		7108 - D184	MD184	R40H5010	R40H5519	NR	NR
	Rd	BX		7142 - D225	MD225	R40H5010	R40H5522	NR	NR
	Rd	BX		7108 - D184	MD184	R40H5010	R40H5519	NR	NR
	Rd	BX		7142 - D225	MD225	R40H5010	R40H5522	NR	NR
	Rd	BX		7142 - D225	MD225	R40H5010	R40H5522	NR	NR
	Rd	BX		7108 - D184	MD184	R40H5010	R40H5519	NR	NR
	Rd	BX		7142 - D225	MD225	R40H5010	R40H5522	NR	NR
	Rd	BX		7142 - D225	MD225	R40H5010	R40H5522	NR	NR
	Rd	BX		7142 - D225	MD225	R40H5010	R40H5522	NR	NR
	Rd	BX		7108 - D184	MD184	R40H5010	R40H5519	NR	NR
	Rd	BX		7108 - D184	MD184	R40H5010	R40H5519	NR	NR
	Rd	BX		7108 - D184	MD184	R40H5010	R40H5519	NR	NR
	Rd	BX		7142 - D225	MD225	R40H5010	R40H5522	NR	NR
	Rd	BX		7108 - D184	MD184	R40H5010	R40H5519	NR	NR
	Rd	BX		7142 - D225	MD225	R40H5010	R40H5522	NR	NR
	Rd	BX		7142 - D225	MD225	R40H5010	R40H5522	NR	NR
	Rd	BX		7108 - D184	MD184	R40H5010	R40H5519	NR	NR
	Rd	BX		7142 - D225	MD225	R40H5010	R40H5522	NR	NR
	Rd	BX		7108 - D184	MD184	R40H5010	R40H5519	NR	NR
	Rd	BX		7142 - D225	MD225	R40H5010	R40H5522	NR	NR
	Rd	BX		7108 - D184	MD184	R40H5010	R40H5519	NR	NR
	Rd	BX		7142 - D225	MD225	R40H5010	R40H5522	NR	NR
	Rd	BX		7142 - D225	MD225	R40H5010	R40H5522	NR	NR
	Rd	BX		7142 - D225	MD225	R40H5010	R40H5522	NR	NR
	Rd	BX		7108 - D184	MD184	R40H5010	R40H5519	NR	NR

37 - Also available as a New unit

38 - First design, may have external joining tube and uses steel pistons

72 - Phenolic/Steel Face

201 - Steel Piston

266 - 10 Stud, Hat Shaped

267 - 10 Stud, U Shaped

268 - 5 Stud, Hat Shape

269 - 5 Stud, U Shape

270 - 5 Stud, U Shape, .766 Dia. Studs

MERITOR DRUM OR ROTOR NO.	CALIPER OR CYLINDER BORE SIZE	MERITOR CALIPER OR WHEEL CYLINDER (LEFT)	MERITOR CALIPER OR WHEEL CYLINDER (RIGHT)	MERITOR CALIPER OR WHEEL CYLINDER REPAIR KIT	MERITOR CALIPER PISTON	MERITOR MASTER CYLINDER	MERITOR MASTER CYLINDER KIT	MERITOR BRAKE HOSE (LEFT)	MERITOR BRAKE HOSE (RIGHT)
									ITE(Cont.)
170, 1700, 1710, 1723, 1724, 1750, 1753, 1754 SERIES CONVENTIONAL CAB, SCHOOL BUS, TILT CAB(Cont.)									
23-123572-004[271]	2-7/8 "	R42R55250	R42R55250[37]	R4066365	R4090096[72]	-	-	-	-
R44141858[275]	2-7/8 "	R42R55250	R42R55250[37]	R4066365	R4090096[72]	-	-	-	-
R44141476[268]	2-7/8 "	R42R55250	R42R55250[37]	R4066365	R4090096[72]	-	-	-	-
23-123572-004[271]	2-7/8 "	R42R55250	R42R55250[37]	R4066365	R4090096[72]	-	-	-	-
R44141476[268]	2-7/8 "	R42R55250	R42R55250[37]	R4066365	R4090096[72]	-	-	-	-
23-123572-004[271]	2-7/8 "	R42R55250	R42R55250[37]	R4066365	R4090096[72]	-	-	-	-
R44141858[275]	2-7/8 "	R42R55250	R42R55250[37]	R4066365	R4090096[72]	-	-	-	-
23-122527-002[272]	2-7/8 "	R42R55250	R42R55250[37]	R4066365	R4090096[72]	-	-	-	-
23-122920-002[273]	2-7/8 "	R42R55250	R42R55250[37]	R4066365	R4090096[72]	-	-	-	-
23-123552-004[266]	2-7/8 "	R42R55250	R42R55250[37]	R4066365	R4090096[72]	-	-	-	-
23-122920-002[273]	2-7/8 "	R42R55250	R42R55250[37]	R4066365	R4090096[72]	-	-	-	-
R44141858[275]	2-7/8 "	R42R55250	R42R55250[37]	R4066365	R4090096[72]	-	-	-	-
R44141858[275]	2-7/8 "	R42R55250	R42R55250[37]	R4066365	R4090096[72]	-	-	-	-
23-122527-002[272]	2-7/8 "	R42R55250	R42R55250[37]	R4066365	R4090096[72]	-	-	-	-
23-122527-002[272]	2-7/8 "	R42R55250	R42R55250[37]	R4066365	R4090096[72]	-	-	-	-
23-122527-002[272]	2-7/8 "	R42R55250	R42R55250[37]	R4066365	R4090096[72]	-	-	-	-
23-123552-004[266]	2-7/8 "	R42R55250	R42R55250[37]	R4066365	R4090096[72]	-	-	-	-
23-123572-004[271]	2-7/8 "	R42R55250	R42R55250[37]	R4066365	R4090096[72]	-	-	-	-
23-123552-004[266]	2-7/8 "	R42R55250	R42R55250[37]	R4066365	R4090096[72]	-	-	-	-
R44141476[268]	2-7/8 "	R42R55250	R42R55250[37]	R4066365	R4090096[72]	-	-	-	-
R44141476[268]	2-7/8 "	R42R55250	R42R55250[37]	R4066365	R4090096[72]	-	-	-	-
R44141858[275]	2-7/8 "	R42R55250	R42R55250[37]	R4066365	R4090096[72]	-	-	-	-
23-123572-004[271]	2-7/8 "	R42R55250	R42R55250[37]	R4066365	R4090096[72]	-	-	-	-
23-122920-002[273]	2-7/8 "	R42R55250	R42R55250[37]	R4066365	R4090096[72]	-	-	-	-
23-123552-004[266]	2-7/8 "	R42R55250	R42R55250[37]	R4066365	R4090096[72]	-	-	-	-
23-122527-002[272]	2-7/8 "	R42R55250	R42R55250[37]	R4066365	R4090096[72]	-	-	-	-
R44141858[275]	2-7/8 "	R42R55250	R42R55250[37]	R4066365	R4090096[72]	-	-	-	-
23-123552-004[266]	2-7/8 "	R42R55250	R42R55250[37]	R4066365	R4090096[72]	-	-	-	-
23-122527-002[272]	2-7/8 "	R42R55250	R42R55250[37]	R4066365	R4090096[72]	-	-	-	-
23-122527-002[272]	3-3/8 "	R42R55099	R42R55098[37]	R4066780	R4090021[201]	-	-	-	-
23-122527-002[272]	3-3/8 "	R42R55099	R42R55098[37]	R4066780	R4090021[201]	-	-	-	-
R44141629[269]	2-7/8 "	R42R55250	R42R55250[37]	R4066365	R4090096[72]	-	-	-	-
R44141628[269]	2-19/32 "	R42R55314	R42R55314[37]	R40107771	R4090100P[72]	-	-	-	-
R44141627[270]	2-19/32 "	R42R55245	R42R55245[38]	R402235118	R402238231[201]	-	-	-	-
23-123572-004[271]	2-7/8 "	R42R55250	R42R55250[37]	R4066365	R4090096[72]	-	-	-	-
23-122527-002[272]	2-7/8 "	R42R55250	R42R55250[37]	R4066365	R4090096[72]	-	-	-	-
R44141608[267]	2-19/32 "	R42R55314	R42R55314[37]	R40107771	R4090100P[72]	-	-	-	-
23-123572-004[271]	2-7/8 "	R42R55250	R42R55250[37]	R4066365	R4090096[72]	-	-	-	-
R44141627[270]	2-19/32 "	R42R55245	R42R55245[38]	R402235118	R402238231[201]	-	-	-	-
R44141628[269]	2-7/8 "	R42R55250	R42R55250[37]	R4066365	R4090096[72]	-	-	-	-
23-122527-002[272]	2-7/8 "	R42R55250	R42R55250[37]	R4066365	R4090096[72]	-	-	-	-
R44141627[270]	2-19/32 "	R42R55245	R42R55245[38]	R402235118	R402238231[201]	-	-	-	-
R44141627[270]	2-7/8 "	R42R55250	R42R55250[37]	R4066365	R4090096[72]	-	-	-	-
R44141629[269]	2-7/8 "	R42R55250	R42R55250[37]	R4066365	R4090096[72]	-	-	-	-
R44141627[270]	2-7/8 "	R42R55250	R42R55250[37]	R4066365	R4090096[72]	-	-	-	-
R44141627[270]	2-19/32 "	R42R55245	R42R55245[38]	R402235118	R402238231[201]	-	-	-	-
R44141629[269]	2-19/32 "	R42R55245	R42R55245[38]	R402235118	R402238231[201]	-	-	-	-
R44141627[270]	2-19/32 "	R42R55245	R42R55245[38]	R402235118	R402238231[201]	-	-	-	-
R44141627[270]	2-7/8 "	R42R55250	R42R55250[37]	R4066365	R4090096[72]	-	-	-	-
R44141629[269]	2-19/32 "	R42R55314	R42R55314[37]	R40107771	R4090100P[72]	-	-	-	-
23-123552-004[266]	2-7/8 "	R42R55250	R42R55250[37]	R4066365	R4090096[72]	-	-	-	-
R44141627[270]	2-19/32 "	R42R55314	R42R55314[37]	R40107771	R4090100P[72]	-	-	-	-
23-123552-004[266]	2-7/8 "	R42R55250	R42R55250[37]	R4066365	R4090096[72]	-	-	-	-
23-123572-004[271]	2-19/32 "	R42R55245	R42R55245[38]	R402235118	R402238231[201]	-	-	-	-
23-123572-004[271]	2-19/32 "	R42R55314	R42R55314[37]	R40107771	R4090100P[72]	-	-	-	-
R44141608[267]	2-7/8 "	R42R55250	R42R55250[37]	R4066365	R4090096[72]	-	-	-	-
R44141608[267]	2-19/32 "	R42R55245	R42R55245[38]	R402235118	R402238231[201]	-	-	-	-
R44141628[269]	2-7/8 "	R42R55250	R42R55250[37]	R4066365	R4090096[72]	-	-	-	-
R44141628[269]	2-7/8 "	R42R55250	R42R55250[37]	R4066365	R4090096[72]	-	-	-	-
23-123572-004[271]	2-7/8 "	R42R55250	R42R55250[37]	R4066365	R4090096[72]	-	-	-	-
23-123552-004[266]	2-19/32 "	R42R55245	R42R55245[38]	R402235118	R402238231[201]	-	-	-	-

271 - 6 Stud, Hat Shape

272 - 6 Stud, U Shape

273 - 5 Stud, U Shape, .780 Dia. Studs

275 - 5 Stud, U Shape, .656 Dia. Studs

MAKE MODEL YEAR AXLE CODE AXLE WEIGHT	AXLE & BRK. TYPE	BRK. MFG.	BRAKE SIZE	FMSI	MERITOR DISC PAD OR BRAKE SHOE	MERITOR GUIDE PIN OR RETURN SPRING KIT	MERITOR CALIPER HWD. KIT OR RETURN SPRING KIT	MERITOR ADJUSTER KIT (LEFT WHEEL)	MERITOR ADJUSTER KIT (RIGHT WHEEL)
ITE(Cont.)									
170, 1700, 1710, 1723, 1724, 1750, 1753, 1754 SERIES CONVENTIONAL CAB, SCHOOL BUS, TILT CAB(Cont.)									
1989									
	Rd	BX		7108 - D184	MD184	R40H5010	R40H5519	NR	NR
	Rd	BX		7142 - D225	MD225	R40H5010	R40H5522	NR	NR
	Rd	BX		7108 - D184	MD184	R40H5010	R40H5519	NR	NR
	Rd	BX		7142 - D225	MD225	R40H5010	R40H5522	NR	NR
	Rd	BX		7142 - D225	MD225	R40H5010	R40H5522	NR	NR
	Rd	BX		7108 - D184	MD184	R40H5010	R40H5519	NR	NR
	Rd	BX		7142 - D225	MD225	R40H5010	R40H5522	NR	NR
	Rd	BX		7108 - D184	MD184	R40H5010	R40H5519	NR	NR
	Rd	BX		7142 - D225	MD225	R40H5010	R40H5522	NR	NR
1988 C1710, C1750 Cargostar Tilt Cab									
FA101	Fd	BX		7108 - D184	MD184	R40H5010	R40H5519	NR	NR
	Fd	BX		7108 - D184	MD184	R40H5010	R40H5519	NR	NR
	Fd	BX		7108 - D184	MD184	R40H5010	R40H5519	NR	NR
	Fd	BX		7108 - D184	MD184	R40H5010	R40H5519	NR	NR
	Fd	BX		7108 - D184	MD184	R40H5010	R40H5519	NR	NR
	Fd	BX		7108 - D184	MD184	R40H5010	R40H5519	NR	NR
C1710, C1750 Cargostar Tilt Cab									
FA309, 329, 339	Fd	BX		7142 - D225	MD225	R40H5010	R40H5522	NR	NR
	Fd	BX		7142 - D225	MD225	R40H5010	R40H5522	NR	NR
	Fd	BX		7142 - D225	MD225	R40H5010	R40H5522	NR	NR
	Fd	BX		7142 - D225	MD225	R40H5010	R40H5522	NR	NR
	Fd	BX		7142 - D225	MD225	R40H5010	R40H5522	NR	NR
	Fd	BX		7142 - D225	MD225	R40H5010	R40H5522	NR	NR
	Fd	BX		7142 - D225	MD225	R40H5010	R40H5522	NR	NR
	Fd	BX		7142 - D225	MD225	R40H5010	R40H5522	NR	NR
	Fd	BX		7142 - D225	MD225	R40H5010	R40H5522	NR	NR
	Fd	BX		7142 - D225	MD225	R40H5010	R40H5522	NR	NR
	Fd	BX		7142 - D225	MD225	R40H5010	R40H5522	NR	NR
	Fd	BX		7142 - D225	MD225	R40H5010	R40H5522	NR	NR
	Fd	BX		7142 - D225	MD225	R40H5010	R40H5522	NR	NR
	Fd	BX		7142 - D225	MD225	R40H5010	R40H5522	NR	NR
	Fd	BX		7142 - D225	MD225	R40H5010	R40H5522	NR	NR
	Fd	BX		7142 - D225	MD225	R40H5010	R40H5522	NR	NR
	Fd	BX		7142 - D225	MD225	R40H5010	R40H5522	NR	NR
	Fd	BX		7142 - D225	MD225	R40H5010	R40H5522	NR	NR
	Fd	BX		7142 - D225	MD225	R40H5010	R40H5522	NR	NR
	Fd	BX		7142 - D225	MD225	R40H5010	R40H5522	NR	NR
	Fd	BX		7142 - D225	MD225	R40H5010	R40H5522	NR	NR
	Fd	BX		7142 - D225	MD225	R40H5010	R40H5522	NR	NR
	Fd	BX		7142 - D225	MD225	R40H5010	R40H5522	NR	NR
	Fd	BX		7142 - D225	MD225	R40H5010	R40H5522	NR	NR
	Fd	BX		7142 - D225	MD225	R40H5010	R40H5522	NR	NR
	Fd	BX		7142 - D225	MD225	R40H5010	R40H5522	NR	NR
	Fd	BX		7142 - D225	MD225	R40H5010	R40H5522	NR	NR
	Fd	BX		7142 - D225	MD225	R40H5010	R40H5522	NR	NR
	Fd	BX		7142 - D225	MD225	R40H5010	R40H5522	NR	NR
	Fd	BX		7142 - D225	MD225	R40H5010	R40H5522	NR	NR
	Fd	BX		7142 - D225	MD225	R40H5010	R40H5522	NR	NR
	Fd	BX		7142 - D225	MD225	R40H5010	R40H5522	NR	NR
	Fd	BX		7142 - D225	MD225	R40H5010	R40H5522	NR	NR
	Fd	BX		7142 - D225	MD225	R40H5010	R40H5522	NR	NR
	Fd	BX		7142 - D225	MD225	R40H5010	R40H5522	NR	NR
	Fd	BX		7142 - D225	MD225	R40H5010	R40H5522	NR	NR
	Fd	BX		7142 - D225	MD225	R40H5010	R40H5522	NR	NR
	Fd	BX		7142 - D225	MD225	R40H5010	R40H5522	NR	NR
	Fd	BX		7142 - D225	MD225	R40H5010	R40H5522	NR	NR
	Fd	BX		7142 - D225	MD225	R40H5010	R40H5522	NR	NR
	Fd	BX		7142 - D225	MD225	R40H5010	R40H5522	NR	NR
	Fd	BX		7142 - D225	MD225	R40H5010	R40H5522	NR	NR
	Fd	BX		7142 - D225	MD225	R40H5010	R40H5522	NR	NR
	Fd	BX		7142 - D225	MD225	R40H5010	R40H5522	NR	NR
	Fd	BX		7142 - D225	MD225	R40H5010	R40H5522	NR	NR
	Fd	BX		7142 - D225	MD225	R40H5010	R40H5522	NR	NR
	Fd	BX		7142 - D225	MD225	R40H5010	R40H5522	NR	NR
	Fd	BX		7142 - D225	MD225	R40H5010	R40H5522	NR	NR
C1710, C1750 Cargostar Tilt Cab									
RA29, 30, 42, 44	Rd	BX		7108 - D184	MD184	R40H5010	R40H5519	NR	NR
	Rd	BX		7142 - D225	MD225	R40H5010	R40H5522	NR	NR
	Rd	BX		7142 - D225	MD225	R40H5010	R40H5522	NR	NR
	Rd	BX		7108 - D184	MD184	R40H5010	R40H5519	NR	NR
	Rd	BX		7142 - D225	MD225	R40H5010	R40H5522	NR	NR
	Rd	BX		7142 - D225	MD225	R40H5010	R40H5522	NR	NR

37 - Also available as a New unit

38 - First design, may have external joining tube and uses steel pistons

39 - First design, uses steel pistons.

40 - For chrome plated steel version, use R4090070P

72 - Phenolic/Steel Face

201 - Steel Piston

266 - 10 Stud, Hat Shaped

267 - 10 Stud, U Shaped

268 - 5 Stud, Hat Shape

MERITOR DRUM OR ROTOR NO.	CALIPER OR CYLINDER BORE SIZE	MERITOR CALIPER OR WHEEL CYLINDER (LEFT)	MERITOR CALIPER OR WHEEL CYLINDER (RIGHT)	MERITOR CALIPER OR WHEEL CYLINDER REPAIR KIT	MERITOR CALIPER PISTON	MERITOR MASTER CYLINDER	MERITOR MASTER CYLINDER KIT	MERITOR BRAKE HOSE (LEFT)	MERITOR BRAKE HOSE (RIGHT)
ITE(Cont.)									
170, 1700, 1710, 1723, 1724, 1750, 1753, 1754 SERIES CONVENTIONAL CAB, SCHOOL BUS, TILT CAB(Cont.)									
23-122527-002[272]	2-19/32 "	R42R55245	R42R55245[38]	R402235118	R402238231[201]	-	-	-	-
R44141629[269]	2-7/8 "	R42R55250	R42R55250[37]	R4066365	R4090096[72]	-	-	-	-
R44141627[270]	2-19/32 "	R42R55245	R42R55245[38]	R402235118	R402238231[201]	-	-	-	-
R44141608[267]	2-7/8 "	R42R55250	R42R55250[37]	R4066365	R4090096[72]	-	-	-	-
23-123552-004[266]	2-7/8 "	R42R55250	R42R55250[37]	R4066365	R4090096[72]	-	-	-	-
R44141628[269]	2-19/32 "	R42R55245	R42R55245[38]	R402235118	R402238231[201]	-	-	-	-
23-122527-002[272]	2-7/8 "	R42R55250	R42R55250[37]	R4066365	R4090096[72]	-	-	-	-
23-123552-004[266]	2-19/32 "	R42R55314	R42R55314[37]	R40107771	R4090100P[72]	-	-	-	-
R44141608[267]	2-7/8 "	R42R55250	R42R55250[37]	R4066365	R4090096[72]	-	-	-	-
23-122920-002[273]	2-19/32 "	R42R55245	R42R55245[38]	R402235118	R402238231[201]	-	-	-	-
23-122527-002[272]	2-19/32 "	R42R55245	R42R55245[38]	R402235118	R402238231[201]	-	-	-	-
R44141476[268]	2-19/32 "	R42R55245	R42R55245[38]	R402235118	R402238231[201]	-	-	-	-
R44141858[275]	2-19/32 "	R42R55245	R42R55245[38]	R402235118	R402238231[201]	-	-	-	-
23-123572-004[271]	2-19/32 "	R42R55245	R42R55245[38]	R402235118	R402238231[201]	-	-	-	-
23-123552-004[266]	2-19/32 "	R42R55245	R42R55245[38]	R402235118	R402238231[201]	-	-	-	-
23-122920-002[273]	2-7/8 "	R429218X	R429218X[39]	R406532	R4090070[40]	-	-	-	-
23-123572-004[271]	2-7/8 "	R429218X	R429218X[39]	R406532	R4090070[40]	-	-	-	-
23-122920-002[273]	2-7/8 "	R429218X	R429218X[39]	R406532	R4090070[40]	-	-	-	-
R44141858[275]	2-7/8 "	R429218X	R429218X[39]	R406532	R4090070[40]	-	-	-	-
23-122527-002[272]	2-7/8 "	R429218X	R429218X[39]	R406532	R4090070[40]	-	-	-	-
23-123552-004[266]	2-7/8 "	R429218X	R429218X[39]	R406532	R4090070[40]	-	-	-	-
23-122527-002[272]	2-7/8 "	R429218X	R429218X[39]	R406532	R4090070[40]	-	-	-	-
23-122920-002[273]	2-7/8 "	R429218X	R429218X[39]	R406532	R4090070[40]	-	-	-	-
23-123552-004[266]	2-7/8 "	R429218X	R429218X[39]	R406532	R4090070[40]	-	-	-	-
R44141858[275]	2-7/8 "	R429218X	R429218X[39]	R406532	R4090070[40]	-	-	-	-
23-123572-004[271]	2-7/8 "	R429218X	R429218X[39]	R406532	R4090070[40]	-	-	-	-
23-123552-004[266]	2-7/8 "	R429218X	R429218X[39]	R406532	R4090070[40]	-	-	-	-
23-123552-004[266]	2-7/8 "	R429218X	R429218X[39]	R406532	R4090070[40]	-	-	-	-
23-122527-002[272]	2-7/8 "	R429218X	R429218X[39]	R406532	R4090070[40]	-	-	-	-
R44141476[268]	2-7/8 "	R429218X	R429218X[39]	R406532	R4090070[40]	-	-	-	-
23-123572-004[271]	2-7/8 "	R429218X	R429218X[39]	R406532	R4090070[40]	-	-	-	-
R44141476[268]	2-7/8 "	R429218X	R429218X[39]	R406532	R4090070[40]	-	-	-	-
R44141858[275]	2-7/8 "	R429218X	R429218X[39]	R406532	R4090070[40]	-	-	-	-
23-122920-002[273]	2-7/8 "	R429218X	R429218X[39]	R406532	R4090070[40]	-	-	-	-
R44141476[268]	2-7/8 "	R429218X	R429218X[39]	R406532	R4090070[40]	-	-	-	-
23-123572-004[271]	2-7/8 "	R429218X	R429218X[39]	R406532	R4090070[40]	-	-	-	-
R44141476[268]	2-7/8 "	R429218X	R429218X[39]	R406532	R4090070[40]	-	-	-	-
23-123572-004[271]	2-7/8 "	R429218X	R429218X[39]	R406532	R4090070[40]	-	-	-	-
23-122920-002[273]	2-7/8 "	R429218X	R429218X[39]	R406532	R4090070[40]	-	-	-	-
R44141858[275]	2-7/8 "	R429218X	R429218X[39]	R406532	R4090070[40]	-	-	-	-
23-123552-004[266]	2-7/8 "	R429218X	R429218X[39]	R406532	R4090070[40]	-	-	-	-
R44141858[275]	2-7/8 "	R429218X	R429218X[39]	R406532	R4090070[40]	-	-	-	-
23-122527-002[272]	2-7/8 "	R429218X	R429218X[39]	R406532	R4090070[40]	-	-	-	-
R44141476[268]	2-7/8 "	R429218X	R429218X[39]	R406532	R4090070[40]	-	-	-	-
23-123552-004[266]	2-7/8 "	R429218X	R429218X[39]	R406532	R4090070[40]	-	-	-	-
23-122527-002[272]	2-7/8 "	R429218X	R429218X[39]	R406532	R4090070[40]	-	-	-	-
23-122527-002[272]	2-7/8 "	R429218X	R429218X[39]	R406532	R4090070[40]	-	-	-	-
23-123572-004[271]	2-7/8 "	R429218X	R429218X[39]	R406532	R4090070[40]	-	-	-	-
R44141858[275]	2-7/8 "	R429218X	R429218X[39]	R406532	R4090070[40]	-	-	-	-
R44141476[268]	2-7/8 "	R429218X	R429218X[39]	R406532	R4090070[40]	-	-	-	-
R44141628[269]	2-19/32 "	R42R55245	R42R55245[38]	R402235118	R402238231[201]	-	-	-	-
23-123572-004[271]	2-7/8 "	R429218X	R429218X[39]	R406532	R4090070[40]	-	-	-	-
R44141608[267]	2-7/8 "	R429218X	R429218X[39]	R406532	R4090070[40]	-	-	-	-
R44141608[267]	2-19/32 "	R42R55245	R42R55245[38]	R402235118	R402238231[201]	-	-	-	-
R44141608[267]	2-7/8 "	R429218X	R429218X[39]	R406532	R4090070[40]	-	-	-	-
23-122527-002[272]	2-7/8 "	R429218X	R429218X[39]	R406532	R4090070[40]	-	-	-	-

269 - 5 Stud, U Shape

270 - 5 Stud, U Shape, .766 Dia. Studs

271 - 6 Stud, Hat Shape

272 - 6 Stud, U Shape

273 - 5 Stud, U Shape, .780 Dia. Studs

275 - 5 Stud, U Shape, .656 Dia. Studs

MAKE MODEL YEAR AXLE CODE AXLE WEIGHT	AXLE & BRK. TYPE	BRK. MFG.	BRAKE SIZE	FMSI	MERITOR DISC PAD OR BRAKE SHOE	MERITOR GUIDE PIN OR RETURN SPRING KIT	MERITOR CALIPER HWD. KIT OR RETURN SPRING KIT	MERITOR ADJUSTER KIT (LEFT WHEEL)	MERITOR ADJUSTER KIT (RIGHT WHEEL)
ITE(Cont.)									
170, 1700, 1710, 1723, 1724, 1750, 1753, 1754 SERIES CONVENTIONAL CAB, SCHOOL BUS, TILT CAB(Cont.)									
1988									
	Rd	BX		7142 - D225	MD225	R40H5010	R40H5522	NR	NR
	Rd	BX		7142 - D225	MD225	R40H5010	R40H5522	NR	NR
	Rd	BX		7108 - D184	MD184	R40H5010	R40H5519	NR	NR
	Rd	BX		7142 - D225	MD225	R40H5010	R40H5522	NR	NR
	Rd	BX		7108 - D184	MD184	R40H5010	R40H5519	NR	NR
	Rd	BX		7108 - D184	MD184	R40H5010	R40H5519	NR	NR
	Rd	BX		7142 - D225	MD225	R40H5010	R40H5522	NR	NR
	Rd	BX		7142 - D225	MD225	R40H5010	R40H5522	NR	NR
	Rd	BX		7108 - D184	MD184	R40H5010	R40H5519	NR	NR
	Rd	BX		7108 - D184	MD184	R40H5010	R40H5519	NR	NR
	Rd	BX		7142 - D225	MD225	R40H5010	R40H5522	NR	NR
	Rd	BX		7108 - D184	MD184	R40H5010	R40H5519	NR	NR
	Rd	BX		7142 - D225	MD225	R40H5010	R40H5522	NR	NR
	Rd	BX		7142 - D225	MD225	R40H5010	R40H5522	NR	NR
	Rd	BX		7108 - D184	MD184	R40H5010	R40H5519	NR	NR
	Rd	BX		7108 - D184	MD184	R40H5010	R40H5519	NR	NR
	Rd	BX		7142 - D225	MD225	R40H5010	R40H5522	NR	NR
	Rd	BX		7142 - D225	MD225	R40H5010	R40H5522	NR	NR
	Rd	BX		7142 - D225	MD225	R40H5010	R40H5522	NR	NR
	Rd	BX		7142 - D225	MD225	R40H5010	R40H5522	NR	NR
	Rd	BX		7142 - D225	MD225	R40H5010	R40H5522	NR	NR
	Rd	BX		7142 - D225	MD225	R40H5010	R40H5522	NR	NR
	Rd	BX		7142 - D225	MD225	R40H5010	R40H5522	NR	NR
	Rd	BX		7142 - D225	MD225	R40H5010	R40H5522	NR	NR
	Rd	BX		7108 - D184	MD184	R40H5010	R40H5519	NR	NR
	Rd	BX		7142 - D225	MD225	R40H5010	R40H5522	NR	NR
	Rd	BX		7108 - D184	MD184	R40H5010	R40H5519	NR	NR
S1723, S1753 School Bus	Fd	BX		7108 - D184	MD184	R40H5010	R40H5519	NR	NR
	Fd	BX		7108 - D184	MD184	R40H5010	R40H5519	NR	NR
	Fd	BX		7108 - D184	MD184	R40H5010	R40H5519	NR	NR
	Fd	BX		7108 - D184	MD184	R40H5010	R40H5519	NR	NR
	Fd	BX		7108 - D184	MD184	R40H5010	R40H5519	NR	NR
	Fd	BX		7108 - D184	MD184	R40H5010	R40H5519	NR	NR
	Fd	BX		7108 - D184	MD184	R40H5010	R40H5519	NR	NR
	Fd	BX		7108 - D184	MD184	R40H5010	R40H5519	NR	NR
	Fd	BX		7108 - D184	MD184	R40H5010	R40H5519	NR	NR
	Fd	BX		7108 - D184	MD184	R40H5010	R40H5519	NR	NR
	Fd	BX		7108 - D184	MD184	R40H5010	R40H5519	NR	NR
	Fd	BX		7108 - D184	MD184	R40H5010	R40H5519	NR	NR
	Fd	BX		7108 - D184	MD184	R40H5010	R40H5519	NR	NR
	Fd	BX		7108 - D184	MD184	R40H5010	R40H5519	NR	NR
	Fd	BX		7108 - D184	MD184	R40H5010	R40H5519	NR	NR
	Fd	BX		7108 - D184	MD184	R40H5010	R40H5519	NR	NR
	Fd	BX		7108 - D184	MD184	R40H5010	R40H5519	NR	NR
	Fd	BX		7108 - D184	MD184	R40H5010	R40H5519	NR	NR
	Fd	BX		7108 - D184	MD184	R40H5010	R40H5519	NR	NR
	Fd	BX		7108 - D184	MD184	R40H5010	R40H5519	NR	NR
	Fd	BX		7108 - D184	MD184	R40H5010	R40H5519	NR	NR
	Fd	BX		7108 - D184	MD184	R40H5010	R40H5519	NR	NR
	Fd	BX		7108 - D184	MD184	R40H5010	R40H5519	NR	NR
	Fd	BX		7108 - D184	MD184	R40H5010	R40H5519	NR	NR
	Fd	BX		7108 - D184	MD184	R40H5010	R40H5519	NR	NR
	Fd	BX		7108 - D184	MD184	R40H5010	R40H5519	NR	NR
	Fd	BX		7108 - D184	MD184	R40H5010	R40H5519	NR	NR
	Fd	BX		7108 - D184	MD184	R40H5010	R40H5519	NR	NR
	Fd	BX		7108 - D184	MD184	R40H5010	R40H5519	NR	NR
	Fd	BX		7108 - D184	MD184	R40H5010	R40H5519	NR	NR
	Fd	BX		7108 - D184	MD184	R40H5010	R40H5519	NR	NR
	Fd	BX		7108 - D184	MD184	R40H5010	R40H5519	NR	NR
	Fd	BX		7108 - D184	MD184	R40H5010	R40H5519	NR	NR
	Fd	BX		7108 - D184	MD184	R40H5010	R40H5519	NR	NR
	Fd	BX		7108 - D184	MD184	R40H5010	R40H5519	NR	NR
	Fd	BX		7108 - D184	MD184	R40H5010	R40H5519	NR	NR

37 - Also available as a New unit
38 - First design, may have external joining tube and uses steel pistons
39 - First design, uses steel pistons.
40 - For chrome plated steel version, use R4090070P
53 - Power Brakes
201 - Steel Piston
266 - 10 Stud, Hat Shaped
267 - 10 Stud, U Shaped
268 - 5 Stud, Hat Shape

MERITOR DRUM OR ROTOR NO.	CALIPER OR CYLINDER BORE SIZE	MERITOR CALIPER OR WHEEL CYLINDER (LEFT)	MERITOR CALIPER OR WHEEL CYLINDER (RIGHT)	MERITOR CALIPER OR WHEEL CYLINDER REPAIR KIT	MERITOR CALIPER PISTON	MERITOR MASTER CYLINDER	MERITOR MASTER CYLINDER KIT	MERITOR BRAKE HOSE (LEFT)	MERITOR BRAKE HOSE (RIGHT)
									ITE(Cont.)
170, 1700, 1710, 1723, 1724, 1750, 1753, 1754 SERIES CONVENTIONAL CAB, SCHOOL BUS, TILT CAB(Cont.)									
23-122527-002[272]	2-7/8 "	R429218X	R429218X[39]	R406532	R4090070[40]	-	-	-	-
23-122527-002[272]	2-7/8 "	R429218X	R429218X[39]	R406532	R4090070[40]	-	-	-	-
R44141608[267]	2-19/32 "	R42R55245	R42R55245[38]	R402235118	R402238231[201]	-	-	-	-
23-123552-004[266]	2-7/8 "	R429218X	R429218X[39]	R406532	R4090070[40]	-	-	-	-
R44141628[269]	2-19/32 "	R42R55245	R42R55245[38]	R402235118	R402238231[201]	-	-	-	-
23-123552-004[266]	2-19/32 "	R42R55245	R42R55245[38]	R402235118	R402238231[201]	-	-	-	-
23-123552-004[266]	2-7/8 "	R429218X	R429218X[39]	R406532	R4090070[40]	-	-	-	-
23-123552-004[266]	2-7/8 "	R429218X	R429218X[39]	R406532	R4090070[40]	-	-	-	-
R44141629[269]	2-19/32 "	R42R55245	R42R55245[38]	R402235118	R402238231[201]	-	-	-	-
R44141627[270]	2-19/32 "	R42R55245	R42R55245[38]	R402235118	R402238231[201]	-	-	-	-
R44141629[269]	2-7/8 "	R429218X	R429218X[39]	R406532	R4090070[40]	-	-	-	-
23-123552-004[266]	2-19/32 "	R42R55245	R42R55245[38]	R402235118	R402238231[201]	-	-	-	-
R44141627[270]	2-7/8 "	R429218X	R429218X[39]	R406532	R4090070[40]	-	-	-	-
R44141629[269]	2-7/8 "	R429218X	R429218X[39]	R406532	R4090070[40]	-	-	-	-
23-122527-002[272]	2-19/32 "	R42R55245	R42R55245[38]	R402235118	R402238231[201]	-	-	-	-
R44141629[269]	2-19/32 "	R42R55245	R42R55245[38]	R402235118	R402238231[201]	-	-	-	-
R44141608[267]	2-7/8 "	R429218X	R429218X[39]	R406532	R4090070[40]	-	-	-	-
R44141628[269]	2-7/8 "	R429218X	R429218X[39]	R406532	R4090070[40]	-	-	-	-
R44141627[270]	2-7/8 "	R429218X	R429218X[39]	R406532	R4090070[40]	-	-	-	-
23-123572-004[271]	2-7/8 "	R429218X	R429218X[39]	R406532	R4090070[40]	-	-	-	-
R44141629[269]	2-7/8 "	R429218X	R429218X[39]	R406532	R4090070[40]	-	-	-	-
23-123572-004[271]	2-7/8 "	R429218X	R429218X[39]	R406532	R4090070[40]	-	-	-	-
R44141627[270]	2-7/8 "	R429218X	R429218X[39]	R406532	R4090070[40]	-	-	-	-
R44141628[269]	2-7/8 "	R429218X	R429218X[39]	R406532	R4090070[40]	-	-	-	-
23-123572-004[271]	2-19/32 "	R42R55245	R42R55245[38]	R402235118	R402238231[201]	-	-	-	-
R44141628[269]	2-7/8 "	R429218X	R429218X[39]	R406532	R4090070[40]	-	-	-	-
23-123572-004[271]	2-19/32 "	R42R55245	R42R55245[38]	R402235118	R402238231[201]	-	-	-	-
23-122920-002[273]	3-3/8 "	R42R55099	R42R55098[37]	R4066780	R4090021[201]	N/A[53]	-	R458635	R458635
23-122920-002[273]	3-3/8 "	R42R55099	R42R55098[37]	R4066780	R4090021[201]	N/A[53]	-	N/A	N/A
23-123552-004[266]	3-3/8 "	R42R55099	R42R55098[37]	R4066780	R4090021[201]	N/A[53]	-	R458635	R458635
23-123572-004[271]	3-3/8 "	R42R55099	R42R55098[37]	R4066780	R4090021[201]	N/A[53]	-	N/A	N/A
R44141858[275]	3-3/8 "	R42R55099	R42R55098[37]	R4066780	R4090021[201]	N/A[53]	-	N/A	N/A
R44141858[275]	3-3/8 "	R42R55099	R42R55098[37]	R4066780	R4090021[201]	N/A[53]	-	R458635	R458635
23-122920-002[273]	3-3/8 "	R42R55099	R42R55098[37]	R4066780	R4090021[201]	N/A[53]	-	N/A	N/A
R44141476[268]	3-3/8 "	R42R55099	R42R55098[37]	R4066780	R4090021[201]	N/A[53]	-	R458635	R458635
23-123572-004[271]	3-3/8 "	R42R55099	R42R55098[37]	R4066780	R4090021[201]	N/A[53]	-	R458635	R458635
23-123552-004[266]	3-3/8 "	R42R55099	R42R55098[37]	R4066780	R4090021[201]	N/A[53]	-	R458632	R458632
R44141476[268]	3-3/8 "	R42R55099	R42R55098[37]	R4066780	R4090021[201]	N/A[53]	-	R458635	R458635
23-123572-004[271]	3-3/8 "	R42R55099	R42R55098[37]	R4066780	R4090021[201]	N/A[53]	-	R458635	R458635
23-122920-002[273]	3-3/8 "	R42R55099	R42R55098[37]	R4066780	R4090021[201]	N/A[53]	-	R458636	R458636
23-122920-002[273]	3-3/8 "	R42R55099	R42R55098[37]	R4066780	R4090021[201]	N/A[53]	-	R458636	R458636
23-123572-004[271]	3-3/8 "	R42R55099	R42R55098[37]	R4066780	R4090021[201]	N/A[53]	-	R458636	R458636
R44141476[268]	3-3/8 "	R42R55099	R42R55098[37]	R4066780	R4090021[201]	N/A[53]	-	R458636	R458636
R44141476[268]	3-3/8 "	R42R55099	R42R55098[37]	R4066780	R4090021[201]	N/A[53]	-	N/A	N/A
R44141858[275]	3-3/8 "	R42R55099	R42R55098[37]	R4066780	R4090021[201]	N/A[53]	-	R458636	R458636
23-123552-004[266]	3-3/8 "	R42R55099	R42R55098[37]	R4066780	R4090021[201]	N/A[53]	-	N/A	N/A
R44141476[268]	3-3/8 "	R42R55099	R42R55098[37]	R4066780	R4090021[201]	N/A[53]	-	N/A	N/A
23-123552-004[266]	3-3/8 "	R42R55099	R42R55098[37]	R4066780	R4090021[201]	N/A[53]	-	N/A	N/A
R44141858[275]	3-3/8 "	R42R55099	R42R55098[37]	R4066780	R4090021[201]	N/A[53]	-	N/A	N/A
23-123572-004[271]	3-3/8 "	R42R55099	R42R55098[37]	R4066780	R4090021[201]	N/A[53]	-	R458632	R458632
R44141858[275]	3-3/8 "	R42R55099	R42R55098[37]	R4066780	R4090021[201]	N/A[53]	-	R458632	R458632
23-123552-004[266]	3-3/8 "	R42R55099	R42R55098[37]	R4066780	R4090021[201]	N/A[53]	-	R458632	R458632
R44141858[275]	3-3/8 "	R42R55099	R42R55098[37]	R4066780	R4090021[201]	N/A[53]	-	R458632	R458632
R44141476[268]	3-3/8 "	R42R55099	R42R55098[37]	R4066780	R4090021[201]	N/A[53]	-	R458632	R458632
23-123572-004[271]	3-3/8 "	R42R55099	R42R55098[37]	R4066780	R4090021[201]	N/A[53]	-	R458632	R458632
23-123552-004[266]	3-3/8 "	R42R55099	R42R55098[37]	R4066780	R4090021[201]	N/A[53]	-	R458636	R458636
23-122920-002[273]	3-3/8 "	R42R55099	R42R55098[37]	R4066780	R4090021[201]	N/A[53]	-	R458632	R458632
23-122920-002[273]	3-3/8 "	R42R55099	R42R55098[37]	R4066780	R4090021[201]	N/A[53]	-	R458632	R458632
23-123552-004[266]	3-3/8 "	R42R55099	R42R55098[37]	R4066780	R4090021[201]	N/A[53]	-	R458636	R458636
R44141858[275]	3-3/8 "	R42R55099	R42R55098[37]	R4066780	R4090021[201]	N/A[53]	-	R458636	R458636
23-123572-004[271]	3-3/8 "	R42R55099	R42R55098[37]	R4066780	R4090021[201]	N/A[53]	-	R458636	R458636
R44141476[268]	3-3/8 "	R42R55099	R42R55098[37]	R4066780	R4090021[201]	N/A[53]	-	R458636	R458636
23-122920-002[273]	3-3/8 "	R42R55099	R42R55098[37]	R4066780	R4090021[201]	N/A[53]	-	R458635	R458635

269 - 5 Stud, U Shape

270 - 5 Stud, U Shape, .766 Dia. Studs

271 - 6 Stud, Hat Shape

272 - 6 Stud, U Shape

273 - 5 Stud, U Shape, .780 Dia. Studs

275 - 5 Stud, U Shape, .656 Dia. Studs

MAKE MODEL YEAR AXLE CODE AXLE WEIGHT	AXLE & BRK. TYPE	BRK. MFG.	BRAKE SIZE	FMSI	MERITOR DISC PAD OR BRAKE SHOE	MERITOR GUIDE PIN OR RETURN SPRING KIT	MERITOR CALIPER HWD. KIT OR RETURN SPRING KIT	MERITOR ADJUSTER KIT (LEFT WHEEL)	MERITOR ADJUSTER KIT (RIGHT WHEEL)
ITE(Cont.)									
170, 1700, 1710, 1723, 1724, 1750, 1753, 1754 SERIES CONVENTIONAL CAB, SCHOOL BUS, TILT CAB(Cont.)									
1988									
	Fd	BX		7108 - D184	MD184	R40H5010	R40H5519	NR	NR
	Fd	BX		7108 - D184	MD184	R40H5010	R40H5519	NR	NR
	Fd	BX		7108 - D184	MD184	R40H5010	R40H5519	NR	NR
	Fd	BX		7108 - D184	MD184	R40H5010	R40H5519	NR	NR
S1723, S1753 School Bus									
FA101	Fd	BX		7108 - D184	MD184	R40H5010	R40H5519	NR	NR
	Fd	BX		7108 - D184	MD184	R40H5010	R40H5519	NR	NR
	Fd	BX		7108 - D184	MD184	R40H5010	R40H5519	NR	NR
	Fd	BX		7108 - D184	MD184	R40H5010	R40H5519	NR	NR
	Fd	BX		7108 - D184	MD184	R40H5010	R40H5519	NR	NR
	Fd	BX		7108 - D184	MD184	R40H5010	R40H5519	NR	NR
	Fd	BX		7108 - D184	MD184	R40H5010	R40H5519	NR	NR
	Fd	BX		7108 - D184	MD184	R40H5010	R40H5519	NR	NR
	Fd	BX		7108 - D184	MD184	R40H5010	R40H5519	NR	NR
	Fd	BX		7108 - D184	MD184	R40H5010	R40H5519	NR	NR
	Fd	BX		7108 - D184	MD184	R40H5010	R40H5519	NR	NR
	Fd	BX		7108 - D184	MD184	R40H5010	R40H5519	NR	NR
	Fd	BX		7108 - D184	MD184	R40H5010	R40H5519	NR	NR
	Fd	BX		7108 - D184	MD184	R40H5010	R40H5519	NR	NR
	Fd	BX		7108 - D184	MD184	R40H5010	R40H5519	NR	NR
	Fd	BX		7108 - D184	MD184	R40H5010	R40H5519	NR	NR
	Fd	BX		7108 - D184	MD184	R40H5010	R40H5519	NR	NR
	Fd	BX		7108 - D184	MD184	R40H5010	R40H5519	NR	NR
	Fd	BX		7108 - D184	MD184	R40H5010	R40H5519	NR	NR
	Fd	BX		7108 - D184	MD184	R40H5010	R40H5519	NR	NR
	Fd	BX		7108 - D184	MD184	R40H5010	R40H5519	NR	NR
	Fd	BX		7108 - D184	MD184	R40H5010	R40H5519	NR	NR
	Fd	BX		7108 - D184	MD184	R40H5010	R40H5519	NR	NR
	Fd	BX		7108 - D184	MD184	R40H5010	R40H5519	NR	NR
S1723, S1753 School Bus									
FA309, 329, 339	Fd	BX		7142 - D225	MD225	R40H5010	R40H5522	NR	NR
	Fd	BX		7142 - D225	MD225	R40H5010	R40H5522	NR	NR
	Fd	BX		7142 - D225	MD225	R40H5010	R40H5522	NR	NR
	Fd	BX		7142 - D225	MD225	R40H5010	R40H5522	NR	NR
	Fd	BX		7142 - D225	MD225	R40H5010	R40H5522	NR	NR
	Fd	BX		7142 - D225	MD225	R40H5010	R40H5522	NR	NR
	Fd	BX		7142 - D225	MD225	R40H5010	R40H5522	NR	NR
	Fd	BX		7142 - D225	MD225	R40H5010	R40H5522	NR	NR
	Fd	BX		7142 - D225	MD225	R40H5010	R40H5522	NR	NR
	Fd	BX		7142 - D225	MD225	R40H5010	R40H5522	NR	NR
	Fd	BX		7142 - D225	MD225	R40H5010	R40H5522	NR	NR
	Fd	BX		7142 - D225	MD225	R40H5010	R40H5522	NR	NR
	Fd	BX		7142 - D225	MD225	R40H5010	R40H5522	NR	NR
	Fd	BX		7142 - D225	MD225	R40H5010	R40H5522	NR	NR
	Fd	BX		7142 - D225	MD225	R40H5010	R40H5522	NR	NR
	Fd	BX		7142 - D225	MD225	R40H5010	R40H5522	NR	NR
	Fd	BX		7142 - D225	MD225	R40H5010	R40H5522	NR	NR
	Fd	BX		7142 - D225	MD225	R40H5010	R40H5522	NR	NR
	Fd	BX		7142 - D225	MD225	R40H5010	R40H5522	NR	NR
	Fd	BX		7142 - D225	MD225	R40H5010	R40H5522	NR	NR
	Fd	BX		7142 - D225	MD225	R40H5010	R40H5522	NR	NR
	Fd	BX		7142 - D225	MD225	R40H5010	R40H5522	NR	NR
	Fd	BX		7142 - D225	MD225	R40H5010	R40H5522	NR	NR
	Fd	BX		7142 - D225	MD225	R40H5010	R40H5522	NR	NR
	Fd	BX		7142 - D225	MD225	R40H5010	R40H5522	NR	NR
	Fd	BX		7142 - D225	MD225	R40H5010	R40H5522	NR	NR
	Fd	BX		7142 - D225	MD225	R40H5010	R40H5522	NR	NR
	Fd	BX		7142 - D225	MD225	R40H5010	R40H5522	NR	NR
	Fd	BX		7142 - D225	MD225	R40H5010	R40H5522	NR	NR
	Fd	BX		7142 - D225	MD225	R40H5010	R40H5522	NR	NR
	Fd	BX		7142 - D225	MD225	R40H5010	R40H5522	NR	NR
	Fd	BX		7142 - D225	MD225	R40H5010	R40H5522	NR	NR
	Fd	BX		7142 - D225	MD225	R40H5010	R40H5522	NR	NR

37 - Also available as a New unit

38 - First design, may have external joining tube and uses steel pistons

39 - First design, uses steel pistons.

40 - For chrome plated steel version, use R4090070P

53 - Power Brakes

201 - Steel Piston

266 - 10 Stud, Hat Shaped

268 - 5 Stud, Hat Shape

271 - 6 Stud, Hat Shape

MERITOR DRUM OR ROTOR NO.	CALIPER OR CYLINDER BORE SIZE	MERITOR CALIPER OR WHEEL CYLINDER (LEFT)	MERITOR CALIPER OR WHEEL CYLINDER (RIGHT)	MERITOR CALIPER OR WHEEL CYLINDER REPAIR KIT	MERITOR CALIPER PISTON	MERITOR MASTER CYLINDER	MERITOR MASTER CYLINDER KIT	MERITOR BRAKE HOSE (LEFT)	MERITOR BRAKE HOSE (RIGHT)
									ITE(Cont.)
170, 1700, 1710, 1723, 1724, 1750, 1753, 1754 SERIES CONVENTIONAL CAB, SCHOOL BUS, TILT CAB(Cont.)									
R44141476[268]	3-3/8 "	R42R55099	R42R55098[37]	R4066780	R4090021[201]	N/A[53]	-	R458632	R458632
R44141858[275]	3-3/8 "	R42R55099	R42R55098[37]	R4066780	R4090021[201]	N/A[53]	-	R458635	R458635
23-123572-004[271]	3-3/8 "	R42R55099	R42R55098[37]	R4066780	R4090021[201]	N/A[53]	-	N/A	N/A
23-123552-004[266]	3-3/8 "	R42R55099	R42R55098[37]	R4066780	R4090021[201]	N/A[53]	-	R458635	R458635
23-123552-004[266]	2-19/32 "	R42R55245	R42R55245[38]	R402235118	R402238231[201]	N/A[53]	-	R458632	R458632
R44141858[275]	2-19/32 "	R42R55245	R42R55245[38]	R402235118	R402238231[201]	N/A[53]	-	R458632	R458632
23-122920-002[273]	2-19/32 "	R42R55245	R42R55245[38]	R402235118	R402238231[201]	N/A[53]	-	R458636	R458636
R44141858[275]	2-19/32 "	R42R55245	R42R55245[38]	R402235118	R402238231[201]	N/A[53]	-	R458636	R458636
23-123572-004[271]	2-19/32 "	R42R55245	R42R55245[38]	R402235118	R402238231[201]	N/A[53]	-	R458636	R458636
R44141476[268]	2-19/32 "	R42R55245	R42R55245[38]	R402235118	R402238231[201]	N/A[53]	-	R458636	R458636
R44141858[275]	2-19/32 "	R42R55245	R42R55245[38]	R402235118	R402238231[201]	N/A[53]	-	N/A	N/A
23-122527-002[272]	2-19/32 "	R42R55245	R42R55245[38]	R402235118	R402238231[201]	N/A[53]	-	N/A	N/A
23-122527-002[272]	2-19/32 "	R42R55245	R42R55245[38]	R402235118	R402238231[201]	N/A[53]	-	R458636	R458636
R44141476[268]	2-19/32 "	R42R55245	R42R55245[38]	R402235118	R402238231[201]	N/A[53]	-	N/A	N/A
23-122527-002[272]	2-19/32 "	R42R55245	R42R55245[38]	R402235118	R402238231[201]	N/A[53]	-	R458635	R458635
23-123552-004[266]	2-19/32 "	R42R55245	R42R55245[38]	R402235118	R402238231[201]	N/A[53]	-	N/A	N/A
R44141476[268]	2-19/32 "	R42R55245	R42R55245[38]	R402235118	R402238231[201]	N/A[53]	-	R458632	R458632
R44141476[268]	2-19/32 "	R42R55245	R42R55245[38]	R402235118	R402238231[201]	N/A[53]	-	R458635	R458635
23-123572-004[271]	2-19/32 "	R42R55245	R42R55245[38]	R402235118	R402238231[201]	N/A[53]	-	R458635	R458635
23-123552-004[266]	2-19/32 "	R42R55245	R42R55245[38]	R402235118	R402238231[201]	N/A[53]	-	R458635	R458635
R44141858[275]	2-19/32 "	R42R55245	R42R55245[38]	R402235118	R402238231[201]	N/A[53]	-	R458635	R458635
23-122527-002[272]	2-19/32 "	R42R55245	R42R55245[38]	R402235118	R402238231[201]	N/A[53]	-	R458632	R458632
23-123572-004[271]	2-19/32 "	R42R55245	R42R55245[38]	R402235118	R402238231[201]	N/A[53]	-	R458632	R458632
23-122920-002[273]	2-19/32 "	R42R55245	R42R55245[38]	R402235118	R402238231[201]	N/A[53]	-	R458632	R458632
23-123552-004[266]	2-19/32 "	R42R55245	R42R55245[38]	R402235118	R402238231[201]	N/A[53]	-	R458636	R458636
23-122920-002[273]	2-19/32 "	R42R55245	R42R55245[38]	R402235118	R402238231[201]	N/A[53]	-	N/A	N/A
23-123572-004[271]	2-19/32 "	R42R55245	R42R55245[38]	R402235118	R402238231[201]	N/A[53]	-	N/A	N/A
23-122920-002[273]	2-19/32 "	R42R55245	R42R55245[38]	R402235118	R402238231[201]	N/A[53]	-	R458635	R458635
R44141476[268]	2-7/8 "	R429218X	R429218X[39]	R406532	R4090070[40]	N/A[53]	-	R458636	R458636
R44141858[275]	2-7/8 "	R429218X	R429218X[39]	R406532	R4090070[40]	N/A[53]	-	R458632	R458632
R44141858[275]	2-7/8 "	R429218X	R429218X[39]	R406532	R4090070[40]	N/A[53]	-	R458636	R458636
R44141476[268]	2-7/8 "	R429218X	R429218X[39]	R406532	R4090070[40]	N/A[53]	-	R458632	R458632
23-122527-002[272]	2-7/8 "	R429218X	R429218X[39]	R406532	R4090070[40]	N/A[53]	-	R458635	R458635
R44141858[275]	2-7/8 "	R429218X	R429218X[39]	R406532	R4090070[40]	N/A[53]	-	R458632	R458632
23-123552-004[266]	2-7/8 "	R429218X	R429218X[39]	R406532	R4090070[40]	N/A[53]	-	R458632	R458632
R44141476[268]	2-7/8 "	R429218X	R429218X[39]	R406532	R4090070[40]	N/A[53]	-	R458632	R458632
R44141476[268]	2-7/8 "	R429218X	R429218X[39]	R406532	R4090070[40]	N/A[53]	-	R458636	R458636
23-123552-004[266]	2-7/8 "	R429218X	R429218X[39]	R406532	R4090070[40]	N/A[53]	-	N/A	N/A
R44141858[275]	2-7/8 "	R429218X	R429218X[39]	R406532	R4090070[40]	N/A[53]	-	R458636	R458636
R44141476[268]	2-7/8 "	R429218X	R429218X[39]	R406532	R4090070[40]	N/A[53]	-	R458635	R458635
23-123572-004[271]	2-7/8 "	R429218X	R429218X[39]	R406532	R4090070[40]	N/A[53]	-	R458636	R458636
23-123572-004[271]	2-7/8 "	R429218X	R429218X[39]	R406532	R4090070[40]	N/A[53]	-	R458632	R458632
R44141858[275]	2-7/8 "	R429218X	R429218X[39]	R406532	R4090070[40]	N/A[53]	-	R458632	R458632
23-122920-002[273]	2-7/8 "	R429218X	R429218X[39]	R406532	R4090070[40]	N/A[53]	-	R458635	R458635
R44141858[275]	2-7/8 "	R429218X	R429218X[39]	R406532	R4090070[40]	N/A[53]	-	N/A	N/A
R44141858[275]	2-7/8 "	R429218X	R429218X[39]	R406532	R4090070[40]	N/A[53]	-	R458635	R458635
23-123552-004[266]	2-7/8 "	R429218X	R429218X[39]	R406532	R4090070[40]	N/A[53]	-	R458635	R458635
23-123552-004[266]	2-7/8 "	R429218X	R429218X[39]	R406532	R4090070[40]	N/A[53]	-	N/A	N/A
23-123552-004[266]	2-7/8 "	R429218X	R429218X[39]	R406532	R4090070[40]	N/A[53]	-	R458636	R458636
23-122527-002[272]	2-7/8 "	R429218X	R429218X[39]	R406532	R4090070[40]	N/A[53]	-	R458632	R458632
23-122920-002[273]	2-7/8 "	R429218X	R429218X[39]	R406532	R4090070[40]	N/A[53]	-	R458636	R458636
R44141476[268]	2-7/8 "	R429218X	R429218X[39]	R406532	R4090070[40]	N/A[53]	-	R458636	R458636
23-122527-002[272]	2-7/8 "	R429218X	R429218X[39]	R406532	R4090070[40]	N/A[53]	-	R458635	R458635
R44141476[268]	2-7/8 "	R429218X	R429218X[39]	R406532	R4090070[40]	N/A[53]	-	R458635	R458635
23-122920-002[273]	2-7/8 "	R429218X	R429218X[39]	R406532	R4090070[40]	N/A[53]	-	R458632	R458632
R44141858[275]	2-7/8 "	R429218X	R429218X[39]	R406532	R4090070[40]	N/A[53]	-	R458636	R458636
23-122920-002[273]	2-7/8 "	R429218X	R429218X[39]	R406532	R4090070[40]	N/A[53]	-	R458635	R458635
23-123552-004[266]	2-7/8 "	R429218X	R429218X[39]	R406532	R4090070[40]	N/A[53]	-	R458635	R458635
23-123572-004[271]	2-7/8 "	R429218X	R429218X[39]	R406532	R4090070[40]	N/A[53]	-	R458632	R458632
23-122920-002[273]	2-7/8 "	R429218X	R429218X[39]	R406532	R4090070[40]	N/A[53]	-	N/A	N/A
23-122527-002[272]	2-7/8 "	R429218X	R429218X[39]	R406532	R4090070[40]	N/A[53]	-	R458635	R458635

272 - 6 Stud, U Shape

273 - 5 Stud, U Shape, .780 Dia. Studs

275 - 5 Stud, U Shape, .656 Dia. Studs

1-APPLICATION

MAKE MODEL YEAR AXLE CODE AXLE WEIGHT	AXLE & BRK. TYPE	BRK. MFG.	BRAKE SIZE	FMSI	MERITOR DISC PAD OR BRAKE SHOE	MERITOR GUIDE PIN OR RETURN SPRING KIT	MERITOR CALIPER HWD. KIT OR RETURN SPRING KIT	MERITOR ADJUSTER KIT (LEFT WHEEL)	MERITOR ADJUSTER KIT (RIGHT WHEEL)
ITE(Cont.)									
170, 1700, 1710, 1723, 1724, 1750, 1753, 1754 SERIES CONVENTIONAL CAB, SCHOOL BUS, TILT CAB(Cont.)									
1988 S1723, S1753 School Bus FA309, 329, 339	Fd	BX		7142 - D225	MD225	R40H5010	R40H5522	NR	NR
	Fd	BX		7142 - D225	MD225	R40H5010	R40H5522	NR	NR
	Fd	BX		7142 - D225	MD225	R40H5010	R40H5522	NR	NR
	Fd	BX		7142 - D225	MD225	R40H5010	R40H5522	NR	NR
	Fd	BX		7142 - D225	MD225	R40H5010	R40H5522	NR	NR
	Fd	BX		7142 - D225	MD225	R40H5010	R40H5522	NR	NR
	Fd	BX		7142 - D225	MD225	R40H5010	R40H5522	NR	NR
	Fd	BX		7142 - D225	MD225	R40H5010	R40H5522	NR	NR
	Fd	BX		7142 - D225	MD225	R40H5010	R40H5522	NR	NR
	Fd	BX		7142 - D225	MD225	R40H5010	R40H5522	NR	NR
	Fd	BX		7142 - D225	MD225	R40H5010	R40H5522	NR	NR
	Fd	BX		7142 - D225	MD225	R40H5010	R40H5522	NR	NR
	Fd	BX		7142 - D225	MD225	R40H5010	R40H5522	NR	NR
	Fd	BX		7142 - D225	MD225	R40H5010	R40H5522	NR	NR
	Fd	BX		7142 - D225	MD225	R40H5010	R40H5522	NR	NR
	Fd	BX		7142 - D225	MD225	R40H5010	R40H5522	NR	NR
	Fd	BX		7142 - D225	MD225	R40H5010	R40H5522	NR	NR
	Fd	BX		7142 - D225	MD225	R40H5010	R40H5522	NR	NR
	Fd	BX		7142 - D225	MD225	R40H5010	R40H5522	NR	NR
	Fd	BX		7142 - D225	MD225	R40H5010	R40H5522	NR	NR
	Fd	BX		7142 - D225	MD225	R40H5010	R40H5522	NR	NR
	Fd	BX		7142 - D225	MD225	R40H5010	R40H5522	NR	NR
	Fd	BX		7142 - D225	MD225	R40H5010	R40H5522	NR	NR
	Fd	BX		7142 - D225	MD225	R40H5010	R40H5522	NR	NR
	Fd	BX		7142 - D225	MD225	R40H5010	R40H5522	NR	NR
	Fd	BX		7142 - D225	MD225	R40H5010	R40H5522	NR	NR
	Fd	BX		7142 - D225	MD225	R40H5010	R40H5522	NR	NR
	Fd	BX		7142 - D225	MD225	R40H5010	R40H5522	NR	NR
	Fd	BX		7142 - D225	MD225	R40H5010	R40H5522	NR	NR
	Fd	BX		7142 - D225	MD225	R40H5010	R40H5522	NR	NR
	Fd	BX		7142 - D225	MD225	R40H5010	R40H5522	NR	NR
	Fd	BX		7142 - D225	MD225	R40H5010	R40H5522	NR	NR
	Fd	BX		7142 - D225	MD225	R40H5010	R40H5522	NR	NR
	Fd	BX		7142 - D225	MD225	R40H5010	R40H5522	NR	NR
	Fd	BX		7142 - D225	MD225	R40H5010	R40H5522	NR	NR
	Fd	BX		7142 - D225	MD225	R40H5010	R40H5522	NR	NR
	Fd	BX		7142 - D225	MD225	R40H5010	R40H5522	NR	NR
	Fd	BX		7142 - D225	MD225	R40H5010	R40H5522	NR	NR
	Fd	BX		7142 - D225	MD225	R40H5010	R40H5522	NR	NR
	Fd	BX		7142 - D225	MD225	R40H5010	R40H5522	NR	NR
	Fd	BX		7142 - D225	MD225	R40H5010	R40H5522	NR	NR
	Fd	BX		7142 - D225	MD225	R40H5010	R40H5522	NR	NR
	Fd	BX		7142 - D225	MD225	R40H5010	R40H5522	NR	NR
	Fd	BX		7142 - D225	MD225	R40H5010	R40H5522	NR	NR
	Fd	BX		7142 - D225	MD225	R40H5010	R40H5522	NR	NR
	Fd	BX		7142 - D225	MD225	R40H5010	R40H5522	NR	NR
	Fd	BX		7142 - D225	MD225	R40H5010	R40H5522	NR	NR
	Fd	BX		7142 - D225	MD225	R40H5010	R40H5522	NR	NR
	Fd	BX		7142 - D225	MD225	R40H5010	R40H5522	NR	NR
	Fd	BX		7142 - D225	MD225	R40H5010	R40H5522	NR	NR
	Fd	BX		7142 - D225	MD225	R40H5010	R40H5522	NR	NR
	Fd	BX		7142 - D225	MD225	R40H5010	R40H5522	NR	NR
	Fd	BX		7142 - D225	MD225	R40H5010	R40H5522	NR	NR
	Fd	BX		7142 - D225	MD225	R40H5010	R40H5522	NR	NR
	Fd	BX		7142 - D225	MD225	R40H5010	R40H5522	NR	NR
	Fd	BX		7142 - D225	MD225	R40H5010	R40H5522	NR	NR
	Fd	BX		7142 - D225	MD225	R40H5010	R40H5522	NR	NR
	Fd	BX		7142 - D225	MD225	R40H5010	R40H5522	NR	NR
	Fd	BX		7142 - D225	MD225	R40H5010	R40H5522	NR	NR
	Fd	BX		7142 - D225	MD225	R40H5010	R40H5522	NR	NR
	Fd	BX		7142 - D225	MD225	R40H5010	R40H5522	NR	NR
	Fd	BX		7142 - D225	MD225	R40H5010	R40H5522	NR	NR
	Fd	BX		7142 - D225	MD225	R40H5010	R40H5522	NR	NR
	Fd	BX		7142 - D225	MD225	R40H5010	R40H5522	NR	NR

39 - First design, uses steel pistons.
266 - 10 Stud, Hat Shaped
272 - 6 Stud, U Shape
40 - For chrome plated steel version, use R4090070P
268 - 5 Stud, Hat Shape
273 - 5 Stud, U Shape, .780 Dia. Studs
53 - Power Brakes
271 - 6 Stud, Hat Shape
275 - 5 Stud, U Shape, .656 Dia. Studs

MERITOR DRUM OR ROTOR NO.	CALIPER OR CYLINDER BORE SIZE	MERITOR CALIPER OR WHEEL CYLINDER (LEFT)	MERITOR CALIPER OR WHEEL CYLINDER (RIGHT)	MERITOR CALIPER OR WHEEL CYLINDER REPAIR KIT	MERITOR CALIPER PISTON	MERITOR MASTER CYLINDER	MERITOR MASTER CYLINDER KIT	MERITOR BRAKE HOSE (LEFT)	MERITOR BRAKE HOSE (RIGHT)
									ITE(Cont.)
170, 1700, 1710, 1723, 1724, 1750, 1753, 1754 SERIES CONVENTIONAL CAB, SCHOOL BUS, TILT CAB(Cont.)									
23-123572-004[271]	2-7/8 "	R429218X	R429218X[39]	R406532	R4090070[40]	N/A[53]	-	R458636	R458636
23-123552-004[266]	2-7/8 "	R429218X	R429218X[39]	R406532	R4090070[40]	N/A[53]	-	R458632	R458632
23-122920-002[273]	2-7/8 "	R429218X	R429218X[39]	R406532	R4090070[40]	N/A[53]	-	N/A	N/A
23-122920-002[273]	2-7/8 "	R429218X	R429218X[39]	R406532	R4090070[40]	N/A[53]	-	R458635	R458635
23-123552-004[266]	2-7/8 "	R429218X	R429218X[39]	R406532	R4090070[40]	N/A[53]	-	R458635	R458635
23-123552-004[266]	2-7/8 "	R429218X	R429218X[39]	R406532	R4090070[40]	N/A[53]	-	R458636	R458636
23-122527-002[272]	2-7/8 "	R429218X	R429218X[39]	R406532	R4090070[40]	N/A[53]	-	N/A	N/A
23-122920-002[273]	2-7/8 "	R429218X	R429218X[39]	R406532	R4090070[40]	N/A[53]	-	R458636	R458636
23-122920-002[273]	2-7/8 "	R429218X	R429218X[39]	R406532	R4090070[40]	N/A[53]	-	N/A	N/A
23-123552-004[266]	2-7/8 "	R429218X	R429218X[39]	R406532	R4090070[40]	N/A[53]	-	R458635	R458635
R44141858[275]	2-7/8 "	R429218X	R429218X[39]	R406532	R4090070[40]	N/A[53]	-	R458632	R458632
23-123572-004[271]	2-7/8 "	R429218X	R429218X[39]	R406532	R4090070[40]	N/A[53]	-	R458632	R458632
23-123572-004[271]	2-7/8 "	R429218X	R429218X[39]	R406532	R4090070[40]	N/A[53]	-	R458636	R458636
23-123572-004[271]	2-7/8 "	R429218X	R429218X[39]	R406532	R4090070[40]	N/A[53]	-	N/A	N/A
R44141476[268]	2-7/8 "	R429218X	R429218X[39]	R406532	R4090070[40]	N/A[53]	-	R458636	R458636
23-122527-002[272]	2-7/8 "	R429218X	R429218X[39]	R406532	R4090070[40]	N/A[53]	-	R458632	R458632
R44141858[275]	2-7/8 "	R429218X	R429218X[39]	R406532	R4090070[40]	N/A[53]	-	R458635	R458635
23-123552-004[266]	2-7/8 "	R429218X	R429218X[39]	R406532	R4090070[40]	N/A[53]	-	N/A	N/A
23-122527-002[272]	2-7/8 "	R429218X	R429218X[39]	R406532	R4090070[40]	N/A[53]	-	N/A	N/A
R44141476[268]	2-7/8 "	R429218X	R429218X[39]	R406532	R4090070[40]	N/A[53]	-	N/A	N/A
23-122920-002[273]	2-7/8 "	R429218X	R429218X[39]	R406532	R4090070[40]	N/A[53]	-	R458636	R458636
23-122527-002[272]	2-7/8 "	R429218X	R429218X[39]	R406532	R4090070[40]	N/A[53]	-	R458632	R458632
23-123572-004[271]	2-7/8 "	R429218X	R429218X[39]	R406532	R4090070[40]	N/A[53]	-	N/A	N/A
23-123572-004[271]	2-7/8 "	R429218X	R429218X[39]	R406532	R4090070[40]	N/A[53]	-	R458632	R458632
23-122920-002[273]	2-7/8 "	R429218X	R429218X[39]	R406532	R4090070[40]	N/A[53]	-	R458632	R458632
23-123552-004[266]	2-7/8 "	R429218X	R429218X[39]	R406532	R4090070[40]	N/A[53]	-	R458632	R458632
R44141476[268]	2-7/8 "	R429218X	R429218X[39]	R406532	R4090070[40]	N/A[53]	-	R458632	R458632
23-122920-002[273]	2-7/8 "	R429218X	R429218X[39]	R406532	R4090070[40]	N/A[53]	-	N/A	N/A
23-123572-004[271]	2-7/8 "	R429218X	R429218X[39]	R406532	R4090070[40]	N/A[53]	-	N/A	N/A
23-123552-004[266]	2-7/8 "	R429218X	R429218X[39]	R406532	R4090070[40]	N/A[53]	-	R458632	R458632
23-122527-002[272]	2-7/8 "	R429218X	R429218X[39]	R406532	R4090070[40]	N/A[53]	-	R458632	R458632
R44141476[268]	2-7/8 "	R429218X	R429218X[39]	R406532	R4090070[40]	N/A[53]	-	R458632	R458632
R44141476[268]	2-7/8 "	R429218X	R429218X[39]	R406532	R4090070[40]	N/A[53]	-	N/A	N/A
23-123572-004[271]	2-7/8 "	R429218X	R429218X[39]	R406532	R4090070[40]	N/A[53]	-	R458635	R458635
23-122527-002[272]	2-7/8 "	R429218X	R429218X[39]	R406532	R4090070[40]	N/A[53]	-	R458636	R458636
23-123552-004[266]	2-7/8 "	R429218X	R429218X[39]	R406532	R4090070[40]	N/A[53]	-	R458635	R458635
R44141858[275]	2-7/8 "	R429218X	R429218X[39]	R406532	R4090070[40]	N/A[53]	-	N/A	N/A
23-122527-002[272]	2-7/8 "	R429218X	R429218X[39]	R406532	R4090070[40]	N/A[53]	-	R458635	R458635
23-123572-004[271]	2-7/8 "	R429218X	R429218X[39]	R406532	R4090070[40]	N/A[53]	-	R458632	R458632
23-122527-002[272]	2-7/8 "	R429218X	R429218X[39]	R406532	R4090070[40]	N/A[53]	-	N/A	N/A
23-122527-002[272]	2-7/8 "	R429218X	R429218X[39]	R406532	R4090070[40]	N/A[53]	-	R458636	R458636
23-123572-004[271]	2-7/8 "	R429218X	R429218X[39]	R406532	R4090070[40]	N/A[53]	-	R458636	R458636
R44141858[275]	2-7/8 "	R429218X	R429218X[39]	R406532	R4090070[40]	N/A[53]	-	N/A	N/A
23-123572-004[271]	2-7/8 "	R429218X	R429218X[39]	R406532	R4090070[40]	N/A[53]	-	R458635	R458635
23-122527-002[272]	2-7/8 "	R429218X	R429218X[39]	R406532	R4090070[40]	N/A[53]	-	N/A	N/A
23-122527-002[272]	2-7/8 "	R429218X	R429218X[39]	R406532	R4090070[40]	N/A[53]	-	R458636	R458636
23-123552-004[266]	2-7/8 "	R429218X	R429218X[39]	R406532	R4090070[40]	N/A[53]	-	N/A	N/A
23-123552-004[266]	2-7/8 "	R429218X	R429218X[39]	R406532	R4090070[40]	N/A[53]	-	R458636	R458636
23-123572-004[271]	2-7/8 "	R429218X	R429218X[39]	R406532	R4090070[40]	N/A[53]	-	R458635	R458635
23-122527-002[272]	2-7/8 "	R429218X	R429218X[39]	R406532	R4090070[40]	N/A[53]	-	N/A	N/A
23-122920-002[273]	2-7/8 "	R429218X	R429218X[39]	R406532	R4090070[40]	N/A[53]	-	R458635	R458635
23-123552-004[266]	2-7/8 "	R429218X	R429218X[39]	R406532	R4090070[40]	N/A[53]	-	R458636	R458636
23-122920-002[273]	2-7/8 "	R429218X	R429218X[39]	R406532	R4090070[40]	N/A[53]	-	R458635	R458635
23-122527-002[272]	2-7/8 "	R429218X	R429218X[39]	R406532	R4090070[40]	N/A[53]	-	R458636	R458636
23-122527-002[272]	2-7/8 "	R429218X	R429218X[39]	R406532	R4090070[40]	N/A[53]	-	N/A	N/A
23-122920-002[273]	2-7/8 "	R429218X	R429218X[39]	R406532	R4090070[40]	N/A[53]	-	N/A	N/A
R44141858[275]	2-7/8 "	R429218X	R429218X[39]	R406532	R4090070[40]	N/A[53]	-	R458632	R458632
23-123552-004[266]	2-7/8 "	R429218X	R429218X[39]	R406532	R4090070[40]	N/A[53]	-	R458635	R458635
R44141476[268]	2-7/8 "	R429218X	R429218X[39]	R406532	R4090070[40]	N/A[53]	-	N/A	N/A
23-123552-004[266]	2-7/8 "	R429218X	R429218X[39]	R406532	R4090070[40]	N/A[53]	-	N/A	N/A
R44141858[275]	2-7/8 "	R429218X	R429218X[39]	R406532	R4090070[40]	N/A[53]	-	R458632	R458632
R44141476[268]	2-7/8 "	R429218X	R429218X[39]	R406532	R4090070[40]	N/A[53]	-	R458636	R458636

MAKE MODEL YEAR AXLE CODE AXLE WEIGHT	AXLE & BRK. TYPE	BRK. MFG.	BRAKE SIZE	FMSI	MERITOR DISC PAD OR BRAKE SHOE	MERITOR GUIDE PIN OR RETURN SPRING KIT	MERITOR CALIPER HWD. KIT OR RETURN SPRING KIT	MERITOR ADJUSTER KIT (LEFT WHEEL)	MERITOR ADJUSTER KIT (RIGHT WHEEL)
ITE(Cont.)									
170, 1700, 1710, 1723, 1724, 1750, 1753, 1754 SERIES CONVENTIONAL CAB, SCHOOL BUS, TILT CAB(Cont.)									
1988									
	Fd	BX		7142 - D225	MD225	R40H5010	R40H5522	NR	NR
	Fd	BX		7142 - D225	MD225	R40H5010	R40H5522	NR	NR
	Fd	BX		7142 - D225	MD225	R40H5010	R40H5522	NR	NR
	Fd	BX		7142 - D225	MD225	R40H5010	R40H5522	NR	NR
	Fd	BX		7142 - D225	MD225	R40H5010	R40H5522	NR	NR
	Fd	BX		7142 - D225	MD225	R40H5010	R40H5522	NR	NR
	Fd	BX		7142 - D225	MD225	R40H5010	R40H5522	NR	NR
	Fd	BX		7142 - D225	MD225	R40H5010	R40H5522	NR	NR
	Fd	BX		7142 - D225	MD225	R40H5010	R40H5522	NR	NR
	Fd	BX		7142 - D225	MD225	R40H5010	R40H5522	NR	NR
	Fd	BX		7142 - D225	MD225	R40H5010	R40H5522	NR	NR
	Fd	BX		7142 - D225	MD225	R40H5010	R40H5522	NR	NR
	Fd	BX		7142 - D225	MD225	R40H5010	R40H5522	NR	NR
	Fd	BX		7142 - D225	MD225	R40H5010	R40H5522	NR	NR
	Fd	BX		7142 - D225	MD225	R40H5010	R40H5522	NR	NR
	Fd	BX		7142 - D225	MD225	R40H5010	R40H5522	NR	NR
	Fd	BX		7142 - D225	MD225	R40H5010	R40H5522	NR	NR
	Fd	BX		7142 - D225	MD225	R40H5010	R40H5522	NR	NR
	Fd	BX		7142 - D225	MD225	R40H5010	R40H5522	NR	NR
	Fd	BX		7142 - D225	MD225	R40H5010	R40H5522	NR	NR
	Fd	BX		7142 - D225	MD225	R40H5010	R40H5522	NR	NR
	Fd	BX		7142 - D225	MD225	R40H5010	R40H5522	NR	NR
	Fd	BX		7142 - D225	MD225	R40H5010	R40H5522	NR	NR
	Fd	BX		7142 - D225	MD225	R40H5010	R40H5522	NR	NR
	Fd	BX		7142 - D225	MD225	R40H5010	R40H5522	NR	NR
	Fd	BX		7142 - D225	MD225	R40H5010	R40H5522	NR	NR
	Fd	BX		7142 - D225	MD225	R40H5010	R40H5522	NR	NR
	Fd	BX		7142 - D225	MD225	R40H5010	R40H5522	NR	NR
	Fd	BX		7142 - D225	MD225	R40H5010	R40H5522	NR	NR
	Fd	BX		7142 - D225	MD225	R40H5010	R40H5522	NR	NR
	Fd	BX		7142 - D225	MD225	R40H5010	R40H5522	NR	NR
	Fd	BX		7142 - D225	MD225	R40H5010	R40H5522	NR	NR
	Fd	BX		7142 - D225	MD225	R40H5010	R40H5522	NR	NR
	Fd	BX		7142 - D225	MD225	R40H5010	R40H5522	NR	NR
	Fd	BX		7142 - D225	MD225	R40H5010	R40H5522	NR	NR
	Fd	BX		7142 - D225	MD225	R40H5010	R40H5522	NR	NR
	Fd	BX		7142 - D225	MD225	R40H5010	R40H5522	NR	NR
	Fd	BX		7142 - D225	MD225	R40H5010	R40H5522	NR	NR
	Fd	BX		7142 - D225	MD225	R40H5010	R40H5522	NR	NR
	Fd	BX		7142 - D225	MD225	R40H5010	R40H5522	NR	NR
	Fd	BX		7142 - D225	MD225	R40H5010	R40H5522	NR	NR
	Fd	BX		7142 - D225	MD225	R40H5010	R40H5522	NR	NR
S1723, S1753 School Bus FA73									
	Fd	BX		7108 - D184	MD184	R40H5010	R40H5519	NR	NR
	Fd	BX		7108 - D184	MD184	R40H5010	R40H5519	NR	NR
	Fd	BX		7108 - D184	MD184	R40H5010	R40H5519	NR	NR
	Fd	BX		7108 - D184	MD184	R40H5010	R40H5519	NR	NR
	Fd	BX		7108 - D184	MD184	R40H5010	R40H5519	NR	NR
	Fd	BX		7108 - D184	MD184	R40H5010	R40H5519	NR	NR
	Fd	BX		7108 - D184	MD184	R40H5010	R40H5519	NR	NR
	Fd	BX		7108 - D184	MD184	R40H5010	R40H5519	NR	NR
S1723, S1753 School Bus RA29, 30, 42, 44									
	Rd	BX		7142 - D225	MD225	R40H5010	R40H5522	NR	NR
	Rd	BX		7142 - D225	MD225	R40H5010	R40H5522	NR	NR
	Rd	BX		7108 - D184	MD184	R40H5010	R40H5519	NR	NR
	Rd	BX		7142 - D225	MD225	R40H5010	R40H5522	NR	NR
	Rd	BX		7108 - D184	MD184	R40H5010	R40H5519	NR	NR
	Rd	BX		7142 - D225	MD225	R40H5010	R40H5522	NR	NR
	Rd	BX		7142 - D225	MD225	R40H5010	R40H5522	NR	NR
	Rd	BX		7108 - D184	MD184	R40H5010	R40H5519	NR	NR

37 - Also available as a New unit

38 - First design, may have external joining tube and uses steel pistons

39 - First design, uses steel pistons.

40 - For chrome plated steel version, use R4090070P

52 - 18" Length

53 - Power Brakes

201 - Steel Piston

266 - 10 Stud, Hat Shaped

267 - 10 Stud, U Shaped

MERITOR DRUM OR ROTOR NO.	CALIPER OR CYLINDER BORE SIZE	MERITOR CALIPER OR WHEEL CYLINDER (LEFT)	MERITOR CALIPER OR WHEEL CYLINDER (RIGHT)	MERITOR CALIPER OR WHEEL CYLINDER REPAIR KIT	MERITOR CALIPER PISTON	MERITOR MASTER CYLINDER	MERITOR MASTER CYLINDER KIT	MERITOR BRAKE HOSE (LEFT)	MERITOR BRAKE HOSE (RIGHT)
									ITE(Cont.)
170, 1700, 1710, 1723, 1724, 1750, 1753, 1754 SERIES CONVENTIONAL CAB, SCHOOL BUS, TILT CAB(Cont.)									
23-122527-002[272]	2-7/8 "	R429218X	R429218X[39]	R406532	R4090070[40]	N/A[53]	-	R458635	R458635
R44141858[275]	2-7/8 "	R429218X	R429218X[39]	R406532	R4090070[40]	N/A[53]	-	R458636	R458636
R44141476[268]	2-7/8 "	R429218X	R429218X[39]	R406532	R4090070[40]	N/A[53]	-	R458632	R458632
R44141476[268]	2-7/8 "	R429218X	R429218X[39]	R406532	R4090070[40]	N/A[53]	-	R458635	R458635
R44141858[275]	2-7/8 "	R429218X	R429218X[39]	R406532	R4090070[40]	N/A[53]	-	R458636	R458636
23-123572-004[271]	2-7/8 "	R429218X	R429218X[39]	R406532	R4090070[40]	N/A[53]	-	R458636	R458636
R44141476[268]	2-7/8 "	R429218X	R429218X[39]	R406532	R4090070[40]	N/A[53]	-	N/A	N/A
23-123572-004[271]	2-7/8 "	R429218X	R429218X[39]	R406532	R4090070[40]	N/A[53]	-	N/A	N/A
23-123552-004[266]	2-7/8 "	R429218X	R429218X[39]	R406532	R4090070[40]	N/A[53]	-	R458632	R458632
R44141858[275]	2-7/8 "	R429218X	R429218X[39]	R406532	R4090070[40]	N/A[53]	-	R458635	R458635
23-122920-002[273]	2-7/8 "	R429218X	R429218X[39]	R406532	R4090070[40]	N/A[53]	-	R458632	R458632
23-123572-004[271]	2-7/8 "	R429218X	R429218X[39]	R406532	R4090070[40]	N/A[53]	-	N/A	N/A
23-122527-002[272]	2-7/8 "	R429218X	R429218X[39]	R406532	R4090070[40]	N/A[53]	-	R458632	R458632
23-123572-004[271]	2-7/8 "	R429218X	R429218X[39]	R406532	R4090070[40]	N/A[53]	-	N/A	N/A
23-122527-002[272]	2-7/8 "	R429218X	R429218X[39]	R406532	R4090070[40]	N/A[53]	-	R458632	R458632
23-122920-002[273]	2-7/8 "	R429218X	R429218X[39]	R406532	R4090070[40]	N/A[53]	-	R458632	R458632
R44141476[268]	2-7/8 "	R429218X	R429218X[39]	R406532	R4090070[40]	N/A[53]	-	R458632	R458632
23-123552-004[266]	2-7/8 "	R429218X	R429218X[39]	R406532	R4090070[40]	N/A[53]	-	R458632	R458632
R44141858[275]	2-7/8 "	R429218X	R429218X[39]	R406532	R4090070[40]	N/A[53]	-	N/A	N/A
R44141858[275]	2-7/8 "	R429218X	R429218X[39]	R406532	R4090070[40]	N/A[53]	-	R458635	R458635
R44141476[268]	2-7/8 "	R429218X	R429218X[39]	R406532	R4090070[40]	N/A[53]	-	R458636	R458636
23-123572-004[271]	2-7/8 "	R429218X	R429218X[39]	R406532	R4090070[40]	N/A[53]	-	R458635	R458635
R44141858[275]	2-7/8 "	R429218X	R429218X[39]	R406532	R4090070[40]	N/A[53]	-	R458636	R458636
23-122920-002[273]	2-7/8 "	R429218X	R429218X[39]	R406532	R4090070[40]	N/A[53]	-	R458636	R458636
R44141476[268]	2-7/8 "	R429218X	R429218X[39]	R406532	R4090070[40]	N/A[53]	-	R458635	R458635
23-122920-002[273]	2-7/8 "	R429218X	R429218X[39]	R406532	R4090070[40]	N/A[53]	-	R458632	R458632
23-123552-004[266]	2-7/8 "	R429218X	R429218X[39]	R406532	R4090070[40]	N/A[53]	-	R458636	R458636
23-123572-004[271]	2-7/8 "	R429218X	R429218X[39]	R406532	R4090070[40]	N/A[53]	-	R458635	R458635
23-123552-004[266]	2-7/8 "	R429218X	R429218X[39]	R406532	R4090070[40]	N/A[53]	-	R458636	R458636
23-122920-002[273]	2-7/8 "	R429218X	R429218X[39]	R406532	R4090070[40]	N/A[53]	-	R458636	R458636
23-122527-002[272]	2-7/8 "	R429218X	R429218X[39]	R406532	R4090070[40]	N/A[53]	-	R458635	R458635
23-123572-004[271]	2-7/8 "	R429218X	R429218X[39]	R406532	R4090070[40]	N/A[53]	-	R458636	R458636
23-123572-004[271]	2-7/8 "	R429218X	R429218X[39]	R406532	R4090070[40]	N/A[53]	-	R458632	R458632
23-122527-002[272]	2-7/8 "	R429218X	R429218X[39]	R406532	R4090070[40]	N/A[53]	-	R458636	R458636
R44141476[268]	2-7/8 "	R429218X	R429218X[39]	R406532	R4090070[40]	N/A[53]	-	N/A	N/A
R44141858[275]	2-7/8 "	R429218X	R429218X[39]	R406532	R4090070[40]	N/A[53]	-	R458635	R458635
R44141858[275]	2-7/8 "	R429218X	R429218X[39]	R406532	R4090070[40]	N/A[53]	-	N/A	N/A
R44141476[268]	2-7/8 "	R429218X	R429218X[39]	R406532	R4090070[40]	N/A[53]	-	R458635	R458635
23-122527-002[272]	2-7/8 "	R429218X	R429218X[39]	R406532	R4090070[40]	N/A[53]	-	R458636	R458636
23-123552-004[266]	2-7/8 "	R429218X	R429218X[39]	R406532	R4090070[40]	N/A[53]	-	N/A	N/A
23-123572-004[271]	2-7/8 "	R429218X	R429218X[39]	R406532	R4090070[40]	N/A[53]	-	R458635	R458635
R44141858[275]	2-7/8 "	R429218X	R429218X[39]	R406532	R4090070[40]	N/A[53]	-	N/A	N/A
R44141858[275]	2-7/8 "	R429218X	R429218X[39]	R406532	R4090070[40]	N/A[53]	-	R458635	R458635
R44141476[268]	2-7/8 "	R429218X	R429218X[39]	R406532	R4090070[40]	N/A[53]	-	R458635	R458635
R44141476[268]	2-7/8 "	R429218X	R429218X[39]	R406532	R4090070[40]	N/A[53]	-	N/A	N/A
23-122527-002[272]	3-3/8 "	R42R55099	R42R55098[37]	R4066780	R4090021[201]	N/A[53]	-	R458635	R458635
23-122527-002[272]	3-3/8 "	R42R55099	R42R55098[37]	R4066780	R4090021[201]	N/A[53]	-	N/A	N/A
23-122527-002[272]	3-3/8 "	R42R55099	R42R55098[37]	R4066780	R4090021[201]	N/A[53]	-	R458632	R458632
23-122527-002[272]	3-3/8 "	R42R55099	R42R55098[37]	R4066780	R4090021[201]	N/A[53]	-	R458636	R458636
23-122527-002[272]	3-3/8 "	R42R55099	R42R55098[37]	R4066780	R4090021[201]	N/A[53]	-	N/A	N/A
23-122527-002[272]	3-3/8 "	R42R55099	R42R55098[37]	R4066780	R4090021[201]	N/A[53]	-	R458632	R458632
23-122527-002[272]	3-3/8 "	R42R55099	R42R55098[37]	R4066780	R4090021[201]	N/A[53]	-	R458636	R458636
23-122527-002[272]	3-3/8 "	R42R55099	R42R55098[37]	R4066780	R4090021[201]	N/A[53]	-	R458635	R458635
R44141608[267]	2-7/8 "	R429218X	R429218X[39]	R406532	R4090070[40]	-	-	R4577512	R4577512
23-123552-004[266]	2-7/8 "	R429218X	R429218X[39]	R406532	R4090070[40]	-	-	R458634[52]	R458634
R44141608[267]	2-19/32 "	R42R55245	R42R55245[38]	R402235118	R402238231[201]	-	-	R458634[52]	R458634
R44141629[269]	2-7/8 "	R429218X	R429218X[39]	R406532	R4090070[40]	-	-	R458634[52]	R458634
23-122527-002[272]	2-19/32 "	R42R55245	R42R55245[38]	R402235118	R402238231[201]	-	-	R4577512	R4577512
R44141608[267]	2-7/8 "	R429218X	R429218X[39]	R406532	R4090070[40]	-	-	R4577512	R4577512
23-122527-002[272]	2-7/8 "	R429218X	R429218X[39]	R406532	R4090070[40]	-	-	R4577512	R4577512
R44141608[267]	2-19/32 "	R42R55245	R42R55245[38]	R402235118	R402238231[201]	-	-	R4577512	R4577512

268 - 5 Stud, Hat Shape

269 - 5 Stud, U Shape

271 - 6 Stud, Hat Shape

272 - 6 Stud, U Shape

273 - 5 Stud, U Shape, .780 Dia. Studs

275 - 5 Stud, U Shape, .656 Dia. Studs

MAKE MODEL YEAR AXLE CODE AXLE WEIGHT	AXLE & BRK. TYPE	BRK. MFG.	BRAKE SIZE	FMSI	MERITOR DISC PAD OR BRAKE SHOE	MERITOR GUIDE PIN OR RETURN SPRING KIT	MERITOR CALIPER HWD. KIT OR RETURN SPRING KIT	MERITOR ADJUSTER KIT (LEFT WHEEL)	MERITOR ADJUSTER KIT (RIGHT WHEEL)
ITE(Cont.)									
170, 1700, 1710, 1723, 1724, 1750, 1753, 1754 SERIES CONVENTIONAL CAB, SCHOOL BUS, TILT CAB(Cont.)									
1988									
	Rd	BX		7142 - D225	MD225	R40H5010	R40H5522	NR	NR
	Rd	BX		7108 - D184	MD184	R40H5010	R40H5519	NR	NR
	Rd	BX		7142 - D225	MD225	R40H5010	R40H5522	NR	NR
	Rd	BX		7108 - D184	MD184	R40H5010	R40H5519	NR	NR
	Rd	BX		7142 - D225	MD225	R40H5010	R40H5522	NR	NR
	Rd	BX		7142 - D225	MD225	R40H5010	R40H5522	NR	NR
	Rd	BX		7142 - D225	MD225	R40H5010	R40H5522	NR	NR
	Rd	BX		7108 - D184	MD184	R40H5010	R40H5519	NR	NR
	Rd	BX		7142 - D225	MD225	R40H5010	R40H5522	NR	NR
	Rd	BX		7142 - D225	MD225	R40H5010	R40H5522	NR	NR
	Rd	BX		7108 - D184	MD184	R40H5010	R40H5519	NR	NR
	Rd	BX		7142 - D225	MD225	R40H5010	R40H5522	NR	NR
	Rd	BX		7142 - D225	MD225	R40H5010	R40H5522	NR	NR
	Rd	BX		7142 - D225	MD225	R40H5010	R40H5522	NR	NR
	Rd	BX		7108 - D184	MD184	R40H5010	R40H5519	NR	NR
	Rd	BX		7108 - D184	MD184	R40H5010	R40H5519	NR	NR
	Rd	BX		7108 - D184	MD184	R40H5010	R40H5519	NR	NR
	Rd	BX		7108 - D184	MD184	R40H5010	R40H5519	NR	NR
	Rd	BX		7142 - D225	MD225	R40H5010	R40H5522	NR	NR
	Rd	BX		7142 - D225	MD225	R40H5010	R40H5522	NR	NR
	Rd	BX		7142 - D225	MD225	R40H5010	R40H5522	NR	NR
	Rd	BX		7108 - D184	MD184	R40H5010	R40H5519	NR	NR
	Rd	BX		7142 - D225	MD225	R40H5010	R40H5522	NR	NR
	Rd	BX		7142 - D225	MD225	R40H5010	R40H5522	NR	NR
	Rd	BX		7142 - D225	MD225	R40H5010	R40H5522	NR	NR
	Rd	BX		7142 - D225	MD225	R40H5010	R40H5522	NR	NR
	Rd	BX		7108 - D184	MD184	R40H5010	R40H5519	NR	NR
	Rd	BX		7108 - D184	MD184	R40H5010	R40H5519	NR	NR
	Rd	BX		7142 - D225	MD225	R40H5010	R40H5522	NR	NR
	Rd	BX		7142 - D225	MD225	R40H5010	R40H5522	NR	NR
	Rd	BX		7142 - D225	MD225	R40H5010	R40H5522	NR	NR
	Rd	BX		7108 - D184	MD184	R40H5010	R40H5519	NR	NR
	Rd	BX		7142 - D225	MD225	R40H5010	R40H5522	NR	NR
	Rd	BX		7108 - D184	MD184	R40H5010	R40H5519	NR	NR
	Rd	BX		7142 - D225	MD225	R40H5010	R40H5522	NR	NR
	Rd	BX		7142 - D225	MD225	R40H5010	R40H5522	NR	NR
	Rd	BX		7108 - D184	MD184	R40H5010	R40H5519	NR	NR
	Rd	BX		7142 - D225	MD225	R40H5010	R40H5522	NR	NR
	Rd	BX		7142 - D225	MD225	R40H5010	R40H5522	NR	NR
	Rd	BX		7142 - D225	MD225	R40H5010	R40H5522	NR	NR
	Rd	BX		7142 - D225	MD225	R40H5010	R40H5522	NR	NR
	Rd	BX		7108 - D184	MD184	R40H5010	R40H5519	NR	NR
	Rd	BX		7108 - D184	MD184	R40H5010	R40H5519	NR	NR
	Rd	BX		7142 - D225	MD225	R40H5010	R40H5522	NR	NR
	Rd	BX		7142 - D225	MD225	R40H5010	R40H5522	NR	NR
	Rd	BX		7142 - D225	MD225	R40H5010	R40H5522	NR	NR
	Rd	BX		7142 - D225	MD225	R40H5010	R40H5522	NR	NR
	Rd	BX		7142 - D225	MD225	R40H5010	R40H5522	NR	NR
	Rd	BX		7108 - D184	MD184	R40H5010	R40H5519	NR	NR
	Rd	BX		7108 - D184	MD184	R40H5010	R40H5519	NR	NR
	Rd	BX		7142 - D225	MD225	R40H5010	R40H5522	NR	NR
	Rd	BX		7142 - D225	MD225	R40H5010	R40H5522	NR	NR
S1724, S1754 Conventional	Fd	BX		7108 - D184	MD184	R40H5010	R40H5519	NR	NR
	Fd	BX		7108 - D184	MD184	R40H5010	R40H5519	NR	NR
	Fd	BX		7108 - D184	MD184	R40H5010	R40H5519	NR	NR
	Fd	BX		7108 - D184	MD184	R40H5010	R40H5519	NR	NR
	Fd	BX		7108 - D184	MD184	R40H5010	R40H5519	NR	NR

37 - Also available as a New unit

38 - First design, may have external joining tube and uses steel pistons

39 - First design, uses steel pistons.

40 - For chrome plated steel version, use R4090070P

52 - 18" Length

53 - Power Brakes

201 - Steel Piston

266 - 10 Stud, Hat Shaped

267 - 10 Stud, U Shaped

MERITOR DRUM OR ROTOR NO.	CALIPER OR CYLINDER BORE SIZE	MERITOR CALIPER OR WHEEL CYLINDER (LEFT)	MERITOR CALIPER OR WHEEL CYLINDER (RIGHT)	MERITOR CALIPER OR WHEEL CYLINDER REPAIR KIT	MERITOR CALIPER PISTON	MERITOR MASTER CYLINDER	MERITOR MASTER CYLINDER KIT	MERITOR BRAKE HOSE (LEFT)	MERITOR BRAKE HOSE (RIGHT)
									ITE(Cont.)
170, 1700, 1710, 1723, 1724, 1750, 1753, 1754 SERIES CONVENTIONAL CAB, SCHOOL BUS, TILT CAB(Cont.)									
R44141627[270]	2-7/8 "	R429218X	R429218X[39]	R406532	R4090070[40]	-	-	R458634[52]	R458634
R44141629[269]	2-19/32 "	R42R55245	R42R55245[38]	R402235118	R402238231[201]	-	-	R4577512	R4577512
R44141608[267]	2-7/8 "	R429218X	R429218X[39]	R406532	R4090070[40]	-	-	R458634[52]	R458634
23-122527-002[272]	2-19/32 "	R42R55245	R42R55245[38]	R402235118	R402238231[201]	-	-	R458634[52]	R458634
R44141629[269]	2-7/8 "	R429218X	R429218X[39]	R406532	R4090070[40]	-	-	R458634[52]	R458634
23-123572-004[271]	2-7/8 "	R429218X	R429218X[39]	R406532	R4090070[40]	-	-	R458634[52]	R458634
23-123572-004[271]	2-7/8 "	R429218X	R429218X[39]	R406532	R4090070[40]	-	-	R458634[52]	R458634
23-123552-004[266]	2-19/32 "	R42R55245	R42R55245[38]	R402235118	R402238231[201]	-	-	R458634[52]	R458634
R44141629[269]	2-7/8 "	R429218X	R429218X[39]	R406532	R4090070[40]	-	-	R4577512	R4577512
23-122527-002[272]	2-7/8 "	R429218X	R429218X[39]	R406532	R4090070[40]	-	-	R4577512	R4577512
23-123572-004[271]	2-19/32 "	R42R55245	R42R55245[38]	R402235118	R402238231[201]	-	-	R4577512	R4577512
R44141627[270]	2-7/8 "	R429218X	R429218X[39]	R406532	R4090070[40]	-	-	R458634[52]	R458634
R44141608[267]	2-7/8 "	R429218X	R429218X[39]	R406532	R4090070[40]	-	-	R4577512	R4577512
23-122527-002[272]	2-7/8 "	R429218X	R429218X[39]	R406532	R4090070[40]	-	-	R4577512	R4577512
R44141608[267]	2-19/32 "	R42R55245	R42R55245[38]	R402235118	R402238231[201]	-	-	R4577512	R4577512
R44141628[269]	2-19/32 "	R42R55245	R42R55245[38]	R402235118	R402238231[201]	-	-	R4577512	R4577512
R44141628[269]	2-19/32 "	R42R55245	R42R55245[38]	R402235118	R402238231[201]	-	-	R458634[52]	R458634
R44141608[267]	2-19/32 "	R42R55245	R42R55245[38]	R402235118	R402238231[201]	-	-	R458634[52]	R458634
23-122527-002[272]	2-7/8 "	R429218X	R429218X[39]	R406532	R4090070[40]	-	-	R458634[52]	R458634
R44141628[269]	2-7/8 "	R429218X	R429218X[39]	R406532	R4090070[40]	-	-	R4577512	R4577512
R44141627[270]	2-7/8 "	R429218X	R429218X[39]	R406532	R4090070[40]	-	-	R4577512	R4577512
23-123572-004[271]	2-19/32 "	R42R55245	R42R55245[38]	R402235118	R402238231[201]	-	-	R4577512	R4577512
23-123552-004[266]	2-7/8 "	R429218X	R429218X[39]	R406532	R4090070[40]	-	-	R458634[52]	R458634
23-122527-002[272]	2-7/8 "	R429218X	R429218X[39]	R406532	R4090070[40]	-	-	R458634[52]	R458634
R44141628[269]	2-7/8 "	R429218X	R429218X[39]	R406532	R4090070[40]	-	-	R4577512	R4577512
23-123572-004[271]	2-7/8 "	R429218X	R429218X[39]	R406532	R4090070[40]	-	-	R4577512	R4577512
23-123572-004[271]	2-19/32 "	R42R55245	R42R55245[38]	R402235118	R402238231[201]	-	-	R458634[52]	R458634
R44141628[269]	2-19/32 "	R42R55245	R42R55245[38]	R402235118	R402238231[201]	-	-	R458634[52]	R458634
23-123552-004[266]	2-7/8 "	R429218X	R429218X[39]	R406532	R4090070[40]	-	-	R458634[52]	R458634
R44141629[269]	2-7/8 "	R429218X	R429218X[39]	R406532	R4090070[40]	-	-	R458634[52]	R458634
R44141608[267]	2-7/8 "	R429218X	R429218X[39]	R406532	R4090070[40]	-	-	R458634[52]	R458634
R44141629[269]	2-19/32 "	R42R55245	R42R55245[38]	R402235118	R402238231[201]	-	-	R4577512	R4577512
R44141608[267]	2-7/8 "	R429218X	R429218X[39]	R406532	R4090070[40]	-	-	R458634[52]	R458634
R44141629[269]	2-19/32 "	R42R55245	R42R55245[38]	R402235118	R402238231[201]	-	-	R458634[52]	R458634
23-123552-004[266]	2-7/8 "	R429218X	R429218X[39]	R406532	R4090070[40]	-	-	R4577512	R4577512
R44141628[269]	2-7/8 "	R429218X	R429218X[39]	R406532	R4090070[40]	-	-	R4577512	R4577512
23-123572-004[271]	2-19/32 "	R42R55245	R42R55245[38]	R402235118	R402238231[201]	-	-	R458634[52]	R458634
23-123552-004[266]	2-7/8 "	R429218X	R429218X[39]	R406532	R4090070[40]	-	-	R4577512	R4577512
R44141629[269]	2-19/32 "	R42R55245	R42R55245[38]	R402235118	R402238231[201]	-	-	R458634[52]	R458634
R44141627[270]	2-19/32 "	R42R55245	R42R55245[38]	R402235118	R402238231[201]	-	-	R4577512	R4577512
23-123572-004[271]	2-7/8 "	R429218X	R429218X[39]	R406532	R4090070[40]	-	-	R458634[52]	R458634
R44141627[270]	2-7/8 "	R429218X	R429218X[39]	R406532	R4090070[40]	-	-	R4577512	R4577512
R44141627[270]	2-19/32 "	R42R55245	R42R55245[38]	R402235118	R402238231[201]	-	-	R458634[52]	R458634
23-123572-004[271]	2-7/8 "	R429218X	R429218X[39]	R406532	R4090070[40]	-	-	R4577512	R4577512
R44141627[270]	2-7/8 "	R429218X	R429218X[39]	R406532	R4090070[40]	-	-	R4577512	R4577512
R44141628[269]	2-7/8 "	R429218X	R429218X[39]	R406532	R4090070[40]	-	-	R458634[52]	R458634
23-122527-002[272]	2-7/8 "	R429218X	R429218X[39]	R406532	R4090070[40]	-	-	R458634[52]	R458634
23-123552-004[266]	2-19/32 "	R42R55245	R42R55245[38]	R402235118	R402238231[201]	-	-	R4577512	R4577512
23-123552-004[266]	2-19/32 "	R42R55245	R42R55245[38]	R402235118	R402238231[201]	-	-	R4577512	R4577512
R44141629[269]	2-7/8 "	R429218X	R429218X[39]	R406532	R4090070[40]	-	-	R4577512	R4577512
R44141627[270]	2-7/8 "	R429218X	R429218X[39]	R406532	R4090070[40]	-	-	R458634[52]	R458634
R44141628[269]	2-7/8 "	R429218X	R429218X[39]	R406532	R4090070[40]	-	-	R458634[52]	R458634
23-123572-004[271]	2-7/8 "	R429218X	R429218X[39]	R406532	R4090070[40]	-	-	R4577512	R4577512
23-123552-004[266]	2-7/8 "	R429218X	R429218X[39]	R406532	R4090070[40]	-	-	R4577512	R4577512
R44141628[269]	2-19/32 "	R42R55245	R42R55245[38]	R402235118	R402238231[201]	-	-	R4577512	R4577512
23-123552-004[266]	2-19/32 "	R42R55245	R42R55245[38]	R402235118	R402238231[201]	-	-	R458634[52]	R458634
R44141629[269]	2-7/8 "	R429218X	R429218X[39]	R406532	R4090070[40]	-	-	R4577512	R4577512
R44141628[269]	2-7/8 "	R429218X	R429218X[39]	R406532	R4090070[40]	-	-	R458634[52]	R458634
23-123552-004[266]	3-3/8 "	R42R55099	R42R55098[37]	R4066780	R4090021[201]	N/A[53]	-	-	-
R44141858[275]	3-3/8 "	R42R55099	R42R55098[37]	R4066780	R4090021[201]	N/A[53]	-	-	-
R44141476[268]	3-3/8 "	R42R55099	R42R55098[37]	R4066780	R4090021[201]	N/A[53]	-	-	-
23-123572-004[271]	3-3/8 "	R42R55099	R42R55098[37]	R4066780	R4090021[201]	N/A[53]	-	-	-
23-122920-002[273]	3-3/8 "	R42R55099	R42R55098[37]	R4066780	R4090021[201]	N/A[53]	-	-	-

268 - 5 Stud, Hat Shape

269 - 5 Stud, U Shape

270 - 5 Stud, U Shape, .766 Dia. Studs

271 - 6 Stud, Hat Shape

272 - 6 Stud, U Shape

273 - 5 Stud, U Shape, .780 Dia. Studs

275 - 5 Stud, U Shape, .656 Dia. Studs

MAKE MODEL YEAR AXLE CODE AXLE WEIGHT	AXLE & BRK. TYPE	BRK. MFG.	BRAKE SIZE	FMSI	MERITOR DISC PAD OR BRAKE SHOE	MERITOR GUIDE PIN OR RETURN SPRING KIT	MERITOR CALIPER HWD. KIT OR RETURN SPRING KIT	MERITOR ADJUSTER KIT (LEFT WHEEL)	MERITOR ADJUSTER KIT (RIGHT WHEEL)
ITE(Cont.)									
170, 1700, 1710, 1723, 1724, 1750, 1753, 1754 SERIES CONVENTIONAL CAB, SCHOOL BUS, TILT CAB(Cont.)									
1988									
	Fd	BX		7108 - D184	MD184	R40H5010	R40H5519	NR	NR
	Fd	BX		7108 - D184	MD184	R40H5010	R40H5519	NR	NR
	Fd	BX		7108 - D184	MD184	R40H5010	R40H5519	NR	NR
	Fd	BX		7108 - D184	MD184	R40H5010	R40H5519	NR	NR
	Fd	BX		7108 - D184	MD184	R40H5010	R40H5519	NR	NR
S1724, S1754 Conventional									
FA101	Fd	BX		7108 - D184	MD184	R40H5010	R40H5519	NR	NR
	Fd	BX		7108 - D184	MD184	R40H5010	R40H5519	NR	NR
	Fd	BX		7108 - D184	MD184	R40H5010	R40H5519	NR	NR
	Fd	BX		7108 - D184	MD184	R40H5010	R40H5519	NR	NR
	Fd	BX		7108 - D184	MD184	R40H5010	R40H5519	NR	NR
	Fd	BX		7108 - D184	MD184	R40H5010	R40H5519	NR	NR
S1724, S1754 Conventional									
FA309, 329, 339	Fd	BX		7142 - D225	MD225	R40H5010	R40H5522	NR	NR
	Fd	BX		7142 - D225	MD225	R40H5010	R40H5522	NR	NR
	Fd	BX		7142 - D225	MD225	R40H5010	R40H5522	NR	NR
	Fd	BX		7142 - D225	MD225	R40H5010	R40H5522	NR	NR
	Fd	BX		7142 - D225	MD225	R40H5010	R40H5522	NR	NR
	Fd	BX		7142 - D225	MD225	R40H5010	R40H5522	NR	NR
	Fd	BX		7142 - D225	MD225	R40H5010	R40H5522	NR	NR
	Fd	BX		7142 - D225	MD225	R40H5010	R40H5522	NR	NR
	Fd	BX		7142 - D225	MD225	R40H5010	R40H5522	NR	NR
	Fd	BX		7142 - D225	MD225	R40H5010	R40H5522	NR	NR
	Fd	BX		7142 - D225	MD225	R40H5010	R40H5522	NR	NR
	Fd	BX		7142 - D225	MD225	R40H5010	R40H5522	NR	NR
	Fd	BX		7142 - D225	MD225	R40H5010	R40H5522	NR	NR
	Fd	BX		7142 - D225	MD225	R40H5010	R40H5522	NR	NR
	Fd	BX		7142 - D225	MD225	R40H5010	R40H5522	NR	NR
	Fd	BX		7142 - D225	MD225	R40H5010	R40H5522	NR	NR
	Fd	BX		7142 - D225	MD225	R40H5010	R40H5522	NR	NR
	Fd	BX		7142 - D225	MD225	R40H5010	R40H5522	NR	NR
	Fd	BX		7142 - D225	MD225	R40H5010	R40H5522	NR	NR
	Fd	BX		7142 - D225	MD225	R40H5010	R40H5522	NR	NR
	Fd	BX		7142 - D225	MD225	R40H5010	R40H5522	NR	NR
	Fd	BX		7142 - D225	MD225	R40H5010	R40H5522	NR	NR
	Fd	BX		7142 - D225	MD225	R40H5010	R40H5522	NR	NR
	Fd	BX		7142 - D225	MD225	R40H5010	R40H5522	NR	NR
	Fd	BX		7142 - D225	MD225	R40H5010	R40H5522	NR	NR
	Fd	BX		7142 - D225	MD225	R40H5010	R40H5522	NR	NR
	Fd	BX		7142 - D225	MD225	R40H5010	R40H5522	NR	NR
	Fd	BX		7142 - D225	MD225	R40H5010	R40H5522	NR	NR
	Fd	BX		7142 - D225	MD225	R40H5010	R40H5522	NR	NR
	Fd	BX		7142 - D225	MD225	R40H5010	R40H5522	NR	NR
	Fd	BX		7142 - D225	MD225	R40H5010	R40H5522	NR	NR
	Fd	BX		7142 - D225	MD225	R40H5010	R40H5522	NR	NR
	Fd	BX		7142 - D225	MD225	R40H5010	R40H5522	NR	NR
	Fd	BX		7142 - D225	MD225	R40H5010	R40H5522	NR	NR
	Fd	BX		7142 - D225	MD225	R40H5010	R40H5522	NR	NR
S1724, S1754 Conventional									
FA73	Fd	BX		7108 - D184	MD184	R40H5010	R40H5519	NR	NR
	Fd	BX		7108 - D184	MD184	R40H5010	R40H5519	NR	NR
S1724, S1754 Conventional									
RA29, 30, 42, 44	Rd	BX		7142 - D225	MD225	R40H5010	R40H5522	NR	NR
	Rd	BX		7108 - D184	MD184	R40H5010	R40H5519	NR	NR
	Rd	BX		7142 - D225	MD225	R40H5010	R40H5522	NR	NR
	Rd	BX		7108 - D184	MD184	R40H5010	R40H5519	NR	NR
	Rd	BX		7108 - D184	MD184	R40H5010	R40H5519	NR	NR
	Rd	BX		7142 - D225	MD225	R40H5010	R40H5522	NR	NR
	Rd	BX		7142 - D225	MD225	R40H5010	R40H5522	NR	NR
	Rd	BX		7142 - D225	MD225	R40H5010	R40H5522	NR	NR
	Rd	BX		7108 - D184	MD184	R40H5010	R40H5519	NR	NR
	Rd	BX		7108 - D184	MD184	R40H5010	R40H5519	NR	NR
	Rd	BX		7142 - D225	MD225	R40H5010	R40H5522	NR	NR

37 - Also available as a New unit

38 - First design, may have external joining tube and uses steel pistons

39 - First design, uses steel pistons.

40 - For chrome plated steel version, use R4090070P

53 - Power Brakes

201 - Steel Piston

266 - 10 Stud, Hat Shaped

267 - 10 Stud, U Shaped

268 - 5 Stud, Hat Shape

MERITOR DRUM OR ROTOR NO.	CALIPER OR CYLINDER BORE SIZE	MERITOR CALIPER OR WHEEL CYLINDER (LEFT)	MERITOR CALIPER OR WHEEL CYLINDER (RIGHT)	MERITOR CALIPER OR WHEEL CYLINDER REPAIR KIT	MERITOR CALIPER PISTON	MERITOR MASTER CYLINDER	MERITOR MASTER CYLINDER KIT	MERITOR BRAKE HOSE (LEFT)	MERITOR BRAKE HOSE (RIGHT)
									ITE(Cont.)
170, 1700, 1710, 1723, 1724, 1750, 1753, 1754 SERIES CONVENTIONAL CAB, SCHOOL BUS, TILT CAB(Cont.)									
23-123552-004[266]	3-3/8 "	R42R55099	R42R55098[37]	R4066780	R4090021[201]	N/A[53]	-	-	-
23-122920-002[273]	3-3/8 "	R42R55099	R42R55098[37]	R4066780	R4090021[201]	N/A[53]	-	-	-
R44141476[268]	3-3/8 "	R42R55099	R42R55098[37]	R4066780	R4090021[201]	N/A[53]	-	-	-
R44141858[275]	3-3/8 "	R42R55099	R42R55098[37]	R4066780	R4090021[201]	N/A[53]	-	-	-
23-123572-004[271]	3-3/8 "	R42R55099	R42R55098[37]	R4066780	R4090021[201]	N/A[53]	-	-	-
23-123552-004[266]	2-19/32 "	R42R55245	R42R55245[38]	R402235118	R402238231[201]	N/A[53]	-	-	-
R44141476[268]	2-19/32 "	R42R55245	R42R55245[38]	R402235118	R402238231[201]	N/A[53]	-	-	-
R44141858[275]	2-19/32 "	R42R55245	R42R55245[38]	R402235118	R402238231[201]	N/A[53]	-	-	-
23-123572-004[271]	2-19/32 "	R42R55245	R42R55245[38]	R402235118	R402238231[201]	N/A[53]	-	-	-
23-122527-002[272]	2-19/32 "	R42R55245	R42R55245[38]	R402235118	R402238231[201]	N/A[53]	-	-	-
23-122920-002[273]	2-19/32 "	R42R55245	R42R55245[38]	R402235118	R402238231[201]	N/A[53]	-	-	-
23-122920-002[273]	2-7/8 "	R429218X	R429218X[39]	R406532	R4090070[40]	N/A[53]	-	-	-
R44141476[268]	2-7/8 "	R429218X	R429218X[39]	R406532	R4090070[40]	N/A[53]	-	-	-
23-123572-004[271]	2-7/8 "	R429218X	R429218X[39]	R406532	R4090070[40]	N/A[53]	-	-	-
23-122527-002[272]	2-7/8 "	R429218X	R429218X[39]	R406532	R4090070[40]	N/A[53]	-	-	-
23-123572-004[271]	2-7/8 "	R429218X	R429218X[39]	R406532	R4090070[40]	N/A[53]	-	-	-
R44141476[268]	2-7/8 "	R429218X	R429218X[39]	R406532	R4090070[40]	N/A[53]	-	-	-
R44141858[275]	2-7/8 "	R429218X	R429218X[39]	R406532	R4090070[40]	N/A[53]	-	-	-
23-122527-002[272]	2-7/8 "	R429218X	R429218X[39]	R406532	R4090070[40]	N/A[53]	-	-	-
23-122920-002[273]	2-7/8 "	R429218X	R429218X[39]	R406532	R4090070[40]	N/A[53]	-	-	-
23-123552-004[266]	2-7/8 "	R429218X	R429218X[39]	R406532	R4090070[40]	N/A[53]	-	-	-
23-123552-004[266]	2-7/8 "	R429218X	R429218X[39]	R406532	R4090070[40]	N/A[53]	-	-	-
R44141858[275]	2-7/8 "	R429218X	R429218X[39]	R406532	R4090070[40]	N/A[53]	-	-	-
23-122920-002[273]	2-7/8 "	R429218X	R429218X[39]	R406532	R4090070[40]	N/A[53]	-	-	-
R44141476[268]	2-7/8 "	R429218X	R429218X[39]	R406532	R4090070[40]	N/A[53]	-	-	-
23-122527-002[272]	2-7/8 "	R429218X	R429218X[39]	R406532	R4090070[40]	N/A[53]	-	-	-
23-123572-004[271]	2-7/8 "	R429218X	R429218X[39]	R406532	R4090070[40]	N/A[53]	-	-	-
R44141476[268]	2-7/8 "	R429218X	R429218X[39]	R406532	R4090070[40]	N/A[53]	-	-	-
23-122920-002[273]	2-7/8 "	R429218X	R429218X[39]	R406532	R4090070[40]	N/A[53]	-	-	-
23-123552-004[266]	2-7/8 "	R429218X	R429218X[39]	R406532	R4090070[40]	N/A[53]	-	-	-
R44141858[275]	2-7/8 "	R429218X	R429218X[39]	R406532	R4090070[40]	N/A[53]	-	-	-
R44141858[275]	2-7/8 "	R429218X	R429218X[39]	R406532	R4090070[40]	N/A[53]	-	-	-
R44141476[268]	2-7/8 "	R429218X	R429218X[39]	R406532	R4090070[40]	N/A[53]	-	-	-
23-123552-004[266]	2-7/8 "	R429218X	R429218X[39]	R406532	R4090070[40]	N/A[53]	-	-	-
23-123572-004[271]	2-7/8 "	R429218X	R429218X[39]	R406532	R4090070[40]	N/A[53]	-	-	-
23-122527-002[272]	2-7/8 "	R429218X	R429218X[39]	R406532	R4090070[40]	N/A[53]	-	-	-
R44141476[268]	2-7/8 "	R429218X	R429218X[39]	R406532	R4090070[40]	N/A[53]	-	-	-
23-122527-002[272]	2-7/8 "	R429218X	R429218X[39]	R406532	R4090070[40]	N/A[53]	-	-	-
23-123552-004[266]	2-7/8 "	R429218X	R429218X[39]	R406532	R4090070[40]	N/A[53]	-	-	-
R44141858[275]	2-7/8 "	R429218X	R429218X[39]	R406532	R4090070[40]	N/A[53]	-	-	-
23-122920-002[273]	2-7/8 "	R429218X	R429218X[39]	R406532	R4090070[40]	N/A[53]	-	-	-
23-123572-004[271]	2-7/8 "	R429218X	R429218X[39]	R406532	R4090070[40]	N/A[53]	-	-	-
R44141858[275]	2-7/8 "	R429218X	R429218X[39]	R406532	R4090070[40]	N/A[53]	-	-	-
23-122527-002[272]	2-7/8 "	R429218X	R429218X[39]	R406532	R4090070[40]	N/A[53]	-	-	-
23-123552-004[266]	2-7/8 "	R429218X	R429218X[39]	R406532	R4090070[40]	N/A[53]	-	-	-
23-123572-004[271]	2-7/8 "	R429218X	R429218X[39]	R406532	R4090070[40]	N/A[53]	-	-	-
23-122527-002[272]	3-3/8 "	R42R55099	R42R55098[37]	R4066780	R4090021[201]	N/A[53]	-	-	-
23-122527-002[272]	3-3/8 "	R42R55099	R42R55098[37]	R4066780	R4090021[201]	N/A[53]	-	-	-
R44141608[267]	2-7/8 "	R429218X	R429218X[39]	R406532	R4090070[40]	-	-	-	-
23-123552-004[266]	2-19/32 "	R42R55245	R42R55245[38]	R402235118	R402238231[201]	-	-	-	-
23-122527-002[272]	2-7/8 "	R429218X	R429218X[39]	R406532	R4090070[40]	-	-	-	-
R44141627[270]	2-19/32 "	R42R55245	R42R55245[38]	R402235118	R402238231[201]	-	-	-	-
R44141629[269]	2-19/32 "	R42R55245	R42R55245[38]	R402235118	R402238231[201]	-	-	-	-
23-123572-004[271]	2-7/8 "	R429218X	R429218X[39]	R406532	R4090070[40]	-	-	-	-
R44141629[269]	2-7/8 "	R429218X	R429218X[39]	R406532	R4090070[40]	-	-	-	-
23-123572-004[271]	2-7/8 "	R429218X	R429218X[39]	R406532	R4090070[40]	-	-	-	-
R44141608[267]	2-19/32 "	R42R55245	R42R55245[38]	R402235118	R402238231[201]	-	-	-	-
23-123552-004[266]	2-19/32 "	R42R55245	R42R55245[38]	R402235118	R402238231[201]	-	-	-	-
23-122527-002[272]	2-7/8 "	R429218X	R429218X[39]	R406532	R4090070[40]	-	-	-	-

269 - 5 Stud, U Shape

270 - 5 Stud, U Shape, .766 Dia. Studs

271 - 6 Stud, Hat Shape

272 - 6 Stud, U Shape

273 - 5 Stud, U Shape, .780 Dia. Studs

275 - 5 Stud, U Shape, .656 Dia. Studs

MAKE MODEL YEAR AXLE CODE AXLE WEIGHT	AXLE & BRK. TYPE	BRK. MFG.	BRAKE SIZE	FMSI	MERITOR DISC PAD OR BRAKE SHOE	MERITOR GUIDE PIN OR RETURN SPRING KIT	MERITOR CALIPER HWD. KIT OR RETURN SPRING KIT	MERITOR ADJUSTER KIT (LEFT WHEEL)	MERITOR ADJUSTER KIT (RIGHT WHEEL)
ITE(Cont.)									
170, 1700, 1710, 1723, 1724, 1750, 1753, 1754 SERIES CONVENTIONAL CAB, SCHOOL BUS, TILT CAB(Cont.)									
1988									
	Rd	BX		7142 - D225	MD225	R40H5010	R40H5522	NR	NR
	Rd	BX		7142 - D225	MD225	R40H5010	R40H5522	NR	NR
	Rd	BX		7142 - D225	MD225	R40H5010	R40H5522	NR	NR
	Rd	BX		7108 - D184	MD184	R40H5010	R40H5519	NR	NR
	Rd	BX		7142 - D225	MD225	R40H5010	R40H5522	NR	NR
	Rd	BX		7142 - D225	MD225	R40H5010	R40H5522	NR	NR
	Rd	BX		7108 - D184	MD184	R40H5010	R40H5519	NR	NR
	Rd	BX		7142 - D225	MD225	R40H5010	R40H5522	NR	NR
	Rd	BX		7142 - D225	MD225	R40H5010	R40H5522	NR	NR
	Rd	BX		7142 - D225	MD225	R40H5010	R40H5522	NR	NR
	Rd	BX		7142 - D225	MD225	R40H5010	R40H5522	NR	NR
	Rd	BX		7142 - D225	MD225	R40H5010	R40H5522	NR	NR
	Rd	BX		7142 - D225	MD225	R40H5010	R40H5522	NR	NR
	Rd	BX		7108 - D184	MD184	R40H5010	R40H5519	NR	NR
	Rd	BX		7108 - D184	MD184	R40H5010	R40H5519	NR	NR
	Rd	BX		7108 - D184	MD184	R40H5010	R40H5519	NR	NR
	Rd	BX		7108 - D184	MD184	R40H5010	R40H5519	NR	NR
	Rd	BX		7142 - D225	MD225	R40H5010	R40H5522	NR	NR
	Rd	BX		7142 - D225	MD225	R40H5010	R40H5522	NR	NR
	Rd	BX		7142 - D225	MD225	R40H5010	R40H5522	NR	NR
	Rd	BX		7142 - D225	MD225	R40H5010	R40H5522	NR	NR
	Rd	BX		7108 - D184	MD184	R40H5010	R40H5519	NR	NR
1987 C1710, C1750 Cargostar Tilt Cab FA101	Fd	BX		7108 - D184	MD184	R40H5010	R40H5519	NR	NR
	Fd	BX		7108 - D184	MD184	R40H5010	R40H5519	NR	NR
	Fd	BX		7108 - D184	MD184	R40H5010	R40H5519	NR	NR
	Fd	BX		7108 - D184	MD184	R40H5010	R40H5519	NR	NR
	Fd	BX		7108 - D184	MD184	R40H5010	R40H5519	NR	NR
	Fd	BX		7108 - D184	MD184	R40H5010	R40H5519	NR	NR
C1710, C1750 Cargostar Tilt Cab FA309, 329, 339	Fd	BX		7142 - D225	MD225	R40H5010	R40H5522	NR	NR
	Fd	BX		7142 - D225	MD225	R40H5010	R40H5522	NR	NR
	Fd	BX		7142 - D225	MD225	R40H5010	R40H5522	NR	NR
	Fd	BX		7142 - D225	MD225	R40H5010	R40H5522	NR	NR
	Fd	BX		7142 - D225	MD225	R40H5010	R40H5522	NR	NR
	Fd	BX		7142 - D225	MD225	R40H5010	R40H5522	NR	NR
	Fd	BX		7142 - D225	MD225	R40H5010	R40H5522	NR	NR
	Fd	BX		7142 - D225	MD225	R40H5010	R40H5522	NR	NR
	Fd	BX		7142 - D225	MD225	R40H5010	R40H5522	NR	NR
	Fd	BX		7142 - D225	MD225	R40H5010	R40H5522	NR	NR
	Fd	BX		7142 - D225	MD225	R40H5010	R40H5522	NR	NR
	Fd	BX		7142 - D225	MD225	R40H5010	R40H5522	NR	NR
	Fd	BX		7142 - D225	MD225	R40H5010	R40H5522	NR	NR
	Fd	BX		7142 - D225	MD225	R40H5010	R40H5522	NR	NR
	Fd	BX		7142 - D225	MD225	R40H5010	R40H5522	NR	NR
	Fd	BX		7142 - D225	MD225	R40H5010	R40H5522	NR	NR
	Fd	BX		7142 - D225	MD225	R40H5010	R40H5522	NR	NR
	Fd	BX		7142 - D225	MD225	R40H5010	R40H5522	NR	NR
	Fd	BX		7142 - D225	MD225	R40H5010	R40H5522	NR	NR
	Fd	BX		7142 - D225	MD225	R40H5010	R40H5522	NR	NR
	Fd	BX		7142 - D225	MD225	R40H5010	R40H5522	NR	NR
	Fd	BX		7142 - D225	MD225	R40H5010	R40H5522	NR	NR
	Fd	BX		7142 - D225	MD225	R40H5010	R40H5522	NR	NR
	Fd	BX		7142 - D225	MD225	R40H5010	R40H5522	NR	NR
	Fd	BX		7142 - D225	MD225	R40H5010	R40H5522	NR	NR
	Fd	BX		7142 - D225	MD225	R40H5010	R40H5522	NR	NR
	Fd	BX		7142 - D225	MD225	R40H5010	R40H5522	NR	NR
	Fd	BX		7142 - D225	MD225	R40H5010	R40H5522	NR	NR
	Fd	BX		7142 - D225	MD225	R40H5010	R40H5522	NR	NR
	Fd	BX		7142 - D225	MD225	R40H5010	R40H5522	NR	NR

38 - First design, may have external joining tube and uses steel pistons
39 - First design, uses steel pistons.
40 - For chrome plated steel version, use R4090070P
201 - Steel Piston
266 - 10 Stud, Hat Shaped
267 - 10 Stud, U Shaped
268 - 5 Stud, Hat Shape
269 - 5 Stud, U Shape
270 - 5 Stud, U Shape, .766 Dia. Studs

MERITOR DRUM OR ROTOR NO.	CALIPER OR CYLINDER BORE SIZE	MERITOR CALIPER OR WHEEL CYLINDER (LEFT)	MERITOR CALIPER OR WHEEL CYLINDER (RIGHT)	MERITOR CALIPER OR WHEEL CYLINDER REPAIR KIT	MERITOR CALIPER PISTON	MERITOR MASTER CYLINDER	MERITOR MASTER CYLINDER KIT	MERITOR BRAKE HOSE (LEFT)	MERITOR BRAKE HOSE (RIGHT)
									ITE(Cont.)
170, 1700, 1710, 1723, 1724, 1750, 1753, 1754 SERIES CONVENTIONAL CAB, SCHOOL BUS, TILT CAB(Cont.)									
R44141608[267]	2-7/8 "	R429218X	R429218X[39]	R406532	R4090070[40]	-	-	-	-
R44141627[270]	2-7/8 "	R429218X	R429218X[39]	R406532	R4090070[40]	-	-	-	-
R44141628[269]	2-7/8 "	R429218X	R429218X[39]	R406532	R4090070[40]	-	-	-	-
23-122527-002[272]	2-19/32 "	R42R55245	R42R55245[38]	R402235118	R402238231[201]	-	-	-	-
R44141627[270]	2-7/8 "	R429218X	R429218X[39]	R406532	R4090070[40]	-	-	-	-
23-123572-004[271]	2-7/8 "	R429218X	R429218X[39]	R406532	R4090070[40]	-	-	-	-
R44141629[269]	2-19/32 "	R42R55245	R42R55245[38]	R402235118	R402238231[201]	-	-	-	-
23-122527-002[272]	2-7/8 "	R429218X	R429218X[39]	R406532	R4090070[40]	-	-	-	-
23-123552-004[266]	2-7/8 "	R429218X	R429218X[39]	R406532	R4090070[40]	-	-	-	-
R44141628[269]	2-7/8 "	R429218X	R429218X[39]	R406532	R4090070[40]	-	-	-	-
R44141628[269]	2-7/8 "	R429218X	R429218X[39]	R406532	R4090070[40]	-	-	-	-
R44141627[270]	2-7/8 "	R429218X	R429218X[39]	R406532	R4090070[40]	-	-	-	-
23-123552-004[266]	2-7/8 "	R429218X	R429218X[39]	R406532	R4090070[40]	-	-	-	-
R44141608[267]	2-19/32 "	R42R55245	R42R55245[38]	R402235118	R402238231[201]	-	-	-	-
R44141628[269]	2-19/32 "	R42R55245	R42R55245[38]	R402235118	R402238231[201]	-	-	-	-
R44141628[269]	2-19/32 "	R42R55245	R42R55245[38]	R402235118	R402238231[201]	-	-	-	-
23-123572-004[271]	2-19/32 "	R42R55245	R42R55245[38]	R402235118	R402238231[201]	-	-	-	-
R44141608[267]	2-7/8 "	R429218X	R429218X[39]	R406532	R4090070[40]	-	-	-	-
R44141629[269]	2-7/8 "	R429218X	R429218X[39]	R406532	R4090070[40]	-	-	-	-
R44141629[269]	2-7/8 "	R429218X	R429218X[39]	R406532	R4090070[40]	-	-	-	-
23-123552-004[266]	2-7/8 "	R429218X	R429218X[39]	R406532	R4090070[40]	-	-	-	-
23-123572-004[271]	2-19/32 "	R42R55245	R42R55245[38]	R402235118	R402238231[201]	-	-	-	-
R44141476[268]	2-19/32 "	R42R55245	R42R55245[38]	R402235118	R402238231[201]	-	-	-	-
23-123552-004[266]	2-19/32 "	R42R55245	R42R55245[38]	R402235118	R402238231[201]	-	-	-	-
R44141858[275]	2-19/32 "	R42R55245	R42R55245[38]	R402235118	R402238231[201]	-	-	-	-
23-122527-002[272]	2-19/32 "	R42R55245	R42R55245[38]	R402235118	R402238231[201]	-	-	-	-
23-122920-002[273]	2-19/32 "	R42R55245	R42R55245[38]	R402235118	R402238231[201]	-	-	-	-
23-123572-004[271]	2-19/32 "	R42R55245	R42R55245[38]	R402235118	R402238231[201]	-	-	-	-
23-123552-004[266]	2-7/8 "	R429218X	R429218X[39]	R406532	R4090070[40]	-	-	-	-
23-123572-004[271]	2-7/8 "	R429218X	R429218X[39]	R406532	R4090070[40]	-	-	-	-
R44141476[268]	2-7/8 "	R429218X	R429218X[39]	R406532	R4090070[40]	-	-	-	-
23-122527-002[272]	2-7/8 "	R429218X	R429218X[39]	R406532	R4090070[40]	-	-	-	-
23-123552-004[266]	2-7/8 "	R429218X	R429218X[39]	R406532	R4090070[40]	-	-	-	-
23-122920-002[273]	2-7/8 "	R429218X	R429218X[39]	R406532	R4090070[40]	-	-	-	-
R44141858[275]	2-7/8 "	R429218X	R429218X[39]	R406532	R4090070[40]	-	-	-	-
23-123572-004[271]	2-7/8 "	R429218X	R429218X[39]	R406532	R4090070[40]	-	-	-	-
23-122527-002[272]	2-7/8 "	R429218X	R429218X[39]	R406532	R4090070[40]	-	-	-	-
23-122920-002[273]	2-7/8 "	R429218X	R429218X[39]	R406532	R4090070[40]	-	-	-	-
R44141858[275]	2-7/8 "	R429218X	R429218X[39]	R406532	R4090070[40]	-	-	-	-
23-123552-004[266]	2-7/8 "	R429218X	R429218X[39]	R406532	R4090070[40]	-	-	-	-
R44141476[268]	2-7/8 "	R429218X	R429218X[39]	R406532	R4090070[40]	-	-	-	-
R44141858[275]	2-7/8 "	R429218X	R429218X[39]	R406532	R4090070[40]	-	-	-	-
R44141476[268]	2-7/8 "	R429218X	R429218X[39]	R406532	R4090070[40]	-	-	-	-
R44141858[275]	2-7/8 "	R429218X	R429218X[39]	R406532	R4090070[40]	-	-	-	-
23-123572-004[271]	2-7/8 "	R429218X	R429218X[39]	R406532	R4090070[40]	-	-	-	-
23-122920-002[273]	2-7/8 "	R429218X	R429218X[39]	R406532	R4090070[40]	-	-	-	-
23-122527-002[272]	2-7/8 "	R429218X	R429218X[39]	R406532	R4090070[40]	-	-	-	-
23-122527-002[272]	2-7/8 "	R429218X	R429218X[39]	R406532	R4090070[40]	-	-	-	-
23-123552-004[266]	2-7/8 "	R429218X	R429218X[39]	R406532	R4090070[40]	-	-	-	-
23-123552-004[266]	2-7/8 "	R429218X	R429218X[39]	R406532	R4090070[40]	-	-	-	-
23-122527-002[272]	2-7/8 "	R429218X	R429218X[39]	R406532	R4090070[40]	-	-	-	-
R44141476[268]	2-7/8 "	R429218X	R429218X[39]	R406532	R4090070[40]	-	-	-	-
R44141858[275]	2-7/8 "	R429218X	R429218X[39]	R406532	R4090070[40]	-	-	-	-
23-123552-004[266]	2-7/8 "	R429218X	R429218X[39]	R406532	R4090070[40]	-	-	-	-
R44141858[275]	2-7/8 "	R429218X	R429218X[39]	R406532	R4090070[40]	-	-	-	-
23-122527-002[272]	2-7/8 "	R429218X	R429218X[39]	R406532	R4090070[40]	-	-	-	-
R44141476[268]	2-7/8 "	R429218X	R429218X[39]	R406532	R4090070[40]	-	-	-	-
23-123572-004[271]	2-7/8 "	R429218X	R429218X[39]	R406532	R4090070[40]	-	-	-	-

271 - 6 Stud, Hat Shape

272 - 6 Stud, U Shape

273 - 5 Stud, U Shape, .780 Dia. Studs

275 - 5 Stud, U Shape, .656 Dia. Studs

MAKE MODEL YEAR AXLE CODE AXLE WEIGHT	AXLE & BRK. TYPE	BRK. MFG.	BRAKE SIZE	FMSI	MERITOR DISC PAD OR BRAKE SHOE	MERITOR GUIDE PIN OR RETURN SPRING KIT	MERITOR CALIPER HWD. KIT OR RETURN SPRING KIT	MERITOR ADJUSTER KIT (LEFT WHEEL)	MERITOR ADJUSTER KIT (RIGHT WHEEL)
ITE(Cont.)									
170, 1700, 1710, 1723, 1724, 1750, 1753, 1754 SERIES CONVENTIONAL CAB, SCHOOL BUS, TILT CAB(Cont.)									
1987									
C1710, C1750 Cargostar Tilt Cab									
FA309, 329, 339	Fd	BX		7142 - D225	MD225	R40H5010	R40H5522	NR	NR
	Fd	BX		7142 - D225	MD225	R40H5010	R40H5522	NR	NR
	Fd	BX		7142 - D225	MD225	R40H5010	R40H5522	NR	NR
	Fd	BX		7142 - D225	MD225	R40H5010	R40H5522	NR	NR
	Fd	BX		7142 - D225	MD225	R40H5010	R40H5522	NR	NR
C1710, C1750 Cargostar Tilt Cab									
RA29, 30, 42, 44	Rd	BX		7142 - D225	MD225	R40H5010	R40H5522	NR	NR
	Rd	BX		7108 - D184	MD184	R40H5010	R40H5519	NR	NR
	Rd	BX		7142 - D225	MD225	R40H5010	R40H5522	NR	NR
	Rd	BX		7142 - D225	MD225	R40H5010	R40H5522	NR	NR
	Rd	BX		7108 - D184	MD184	R40H5010	R40H5519	NR	NR
	Rd	BX		7142 - D225	MD225	R40H5010	R40H5522	NR	NR
	Rd	BX		7142 - D225	MD225	R40H5010	R40H5522	NR	NR
	Rd	BX		7108 - D184	MD184	R40H5010	R40H5519	NR	NR
	Rd	BX		7142 - D225	MD225	R40H5010	R40H5522	NR	NR
	Rd	BX		7142 - D225	MD225	R40H5010	R40H5522	NR	NR
	Rd	BX		7108 - D184	MD184	R40H5010	R40H5519	NR	NR
	Rd	BX		7142 - D225	MD225	R40H5010	R40H5522	NR	NR
	Rd	BX		7142 - D225	MD225	R40H5010	R40H5522	NR	NR
	Rd	BX		7108 - D184	MD184	R40H5010	R40H5519	NR	NR
	Rd	BX		7142 - D225	MD225	R40H5010	R40H5522	NR	NR
	Rd	BX		7108 - D184	MD184	R40H5010	R40H5519	NR	NR
	Rd	BX		7142 - D225	MD225	R40H5010	R40H5522	NR	NR
	Rd	BX		7108 - D184	MD184	R40H5010	R40H5519	NR	NR
	Rd	BX		7142 - D225	MD225	R40H5010	R40H5522	NR	NR
	Rd	BX		7142 - D225	MD225	R40H5010	R40H5522	NR	NR
	Rd	BX		7142 - D225	MD225	R40H5010	R40H5522	NR	NR
	Rd	BX		7108 - D184	MD184	R40H5010	R40H5519	NR	NR
	Rd	BX		7142 - D225	MD225	R40H5010	R40H5522	NR	NR
	Rd	BX		7142 - D225	MD225	R40H5010	R40H5522	NR	NR
	Rd	BX		7108 - D184	MD184	R40H5010	R40H5519	NR	NR
	Rd	BX		7108 - D184	MD184	R40H5010	R40H5519	NR	NR
	Rd	BX		7142 - D225	MD225	R40H5010	R40H5522	NR	NR
	Rd	BX		7142 - D225	MD225	R40H5010	R40H5522	NR	NR
	Rd	BX		7142 - D225	MD225	R40H5010	R40H5522	NR	NR
	Rd	BX		7142 - D225	MD225	R40H5010	R40H5522	NR	NR
	Rd	BX		7142 - D225	MD225	R40H5010	R40H5522	NR	NR
	Rd	BX		7108 - D184	MD184	R40H5010	R40H5519	NR	NR
	Rd	BX		7142 - D225	MD225	R40H5010	R40H5522	NR	NR
	Rd	BX		7108 - D184	MD184	R40H5010	R40H5519	NR	NR
S1723, S1753 School Bus	Fd	BX		7108 - D184	MD184	R40H5010	R40H5519	NR	NR
	Fd	BX		7108 - D184	MD184	R40H5010	R40H5519	NR	NR
	Fd	BX		7108 - D184	MD184	R40H5010	R40H5519	NR	NR
	Fd	BX		7108 - D184	MD184	R40H5010	R40H5519	NR	NR
	Fd	BX		7108 - D184	MD184	R40H5010	R40H5519	NR	NR
	Fd	BX		7108 - D184	MD184	R40H5010	R40H5519	NR	NR
	Fd	BX		7108 - D184	MD184	R40H5010	R40H5519	NR	NR
	Fd	BX		7108 - D184	MD184	R40H5010	R40H5519	NR	NR
	Fd	BX		7108 - D184	MD184	R40H5010	R40H5519	NR	NR
	Fd	BX		7108 - D184	MD184	R40H5010	R40H5519	NR	NR
	Fd	BX		7108 - D184	MD184	R40H5010	R40H5519	NR	NR
	Fd	BX		7108 - D184	MD184	R40H5010	R40H5519	NR	NR
	Fd	BX		7108 - D184	MD184	R40H5010	R40H5519	NR	NR
	Fd	BX		7108 - D184	MD184	R40H5010	R40H5519	NR	NR
	Fd	BX		7108 - D184	MD184	R40H5010	R40H5519	NR	NR
	Fd	BX		7108 - D184	MD184	R40H5010	R40H5519	NR	NR
	Fd	BX		7108 - D184	MD184	R40H5010	R40H5519	NR	NR
	Fd	BX		7108 - D184	MD184	R40H5010	R40H5519	NR	NR
	Fd	BX		7108 - D184	MD184	R40H5010	R40H5519	NR	NR
	Fd	BX		7108 - D184	MD184	R40H5010	R40H5519	NR	NR
	Fd	BX		7108 - D184	MD184	R40H5010	R40H5519	NR	NR
	Fd	BX		7108 - D184	MD184	R40H5010	R40H5519	NR	NR
	Fd	BX		7108 - D184	MD184	R40H5010	R40H5519	NR	NR
	Fd	BX		7108 - D184	MD184	R40H5010	R40H5519	NR	NR
	Fd	BX		7108 - D184	MD184	R40H5010	R40H5519	NR	NR
	Fd	BX		7108 - D184	MD184	R40H5010	R40H5519	NR	NR
	Fd	BX		7108 - D184	MD184	R40H5010	R40H5519	NR	NR
	Fd	BX		7108 - D184	MD184	R40H5010	R40H5519	NR	NR
	Fd	BX		7108 - D184	MD184	R40H5010	R40H5519	NR	NR
	Fd	BX		7108 - D184	MD184	R40H5010	R40H5519	NR	NR

37 - Also available as a New unit

38 - First design, may have external joining tube and uses steel pistons

39 - First design, uses steel pistons.

40 - For chrome plated steel version, use R4090070P

53 - Power Brakes

201 - Steel Piston

266 - 10 Stud, Hat Shaped

267 - 10 Stud, U Shaped

268 - 5 Stud, Hat Shape

MERITOR DRUM OR ROTOR NO.	CALIPER OR CYLINDER BORE SIZE	MERITOR CALIPER OR WHEEL CYLINDER (LEFT)	MERITOR CALIPER OR WHEEL CYLINDER (RIGHT)	MERITOR CALIPER OR WHEEL CYLINDER REPAIR KIT	MERITOR CALIPER PISTON	MERITOR MASTER CYLINDER	MERITOR MASTER CYLINDER KIT	MERITOR BRAKE HOSE (LEFT)	MERITOR BRAKE HOSE (RIGHT)
									ITE(Cont.)
170, 1700, 1710, 1723, 1724, 1750, 1753, 1754 SERIES CONVENTIONAL CAB, SCHOOL BUS, TILT CAB(Cont.)									
R44141476[268]	2-7/8 "	R429218X	R429218X[39]	R406532	R4090070[40]	-	-	-	-
23-123572-004[271]	2-7/8 "	R429218X	R429218X[39]	R406532	R4090070[40]	-	-	-	-
23-122920-002[273]	2-7/8 "	R429218X	R429218X[39]	R406532	R4090070[40]	-	-	-	-
23-123572-004[271]	2-7/8 "	R429218X	R429218X[39]	R406532	R4090070[40]	-	-	-	-
23-122920-002[273]	2-7/8 "	R429218X	R429218X[39]	R406532	R4090070[40]	-	-	-	-
R44141608[267]	2-7/8 "	R429218X	R429218X[39]	R406532	R4090070[40]	-	-	-	-
23-123572-004[271]	2-19/32 "	R42R55245	R42R55245[38]	R402235118	R402238231[201]	-	-	-	-
23-123552-004[266]	2-7/8 "	R429218X	R429218X[39]	R406532	R4090070[40]	-	-	-	-
23-123552-004[266]	2-7/8 "	R429218X	R429218X[39]	R406532	R4090070[40]	-	-	-	-
23-122527-002[272]	2-19/32 "	R42R55245	R42R55245[38]	R402235118	R402238231[201]	-	-	-	-
R44141608[267]	2-7/8 "	R429218X	R429218X[39]	R406532	R4090070[40]	-	-	-	-
R44141608[267]	2-7/8 "	R429218X	R429218X[39]	R406532	R4090070[40]	-	-	-	-
23-123572-004[271]	2-19/32 "	R42R55245	R42R55245[38]	R402235118	R402238231[201]	-	-	-	-
23-122527-002[272]	2-7/8 "	R429218X	R429218X[39]	R406532	R4090070[40]	-	-	-	-
R44141629[269]	2-7/8 "	R429218X	R429218X[39]	R406532	R4090070[40]	-	-	-	-
R44141628[269]	2-19/32 "	R42R55245	R42R55245[38]	R402235118	R402238231[201]	-	-	-	-
R44141629[269]	2-7/8 "	R429218X	R429218X[39]	R406532	R4090070[40]	-	-	-	-
23-122527-002[272]	2-7/8 "	R429218X	R429218X[39]	R406532	R4090070[40]	-	-	-	-
R44141628[269]	2-19/32 "	R42R55245	R42R55245[38]	R402235118	R402238231[201]	-	-	-	-
23-122527-002[272]	2-7/8 "	R429218X	R429218X[39]	R406532	R4090070[40]	-	-	-	-
23-123552-004[266]	2-19/32 "	R42R55245	R42R55245[38]	R402235118	R402238231[201]	-	-	-	-
R44141627[270]	2-7/8 "	R429218X	R429218X[39]	R406532	R4090070[40]	-	-	-	-
23-123552-004[266]	2-19/32 "	R42R55245	R42R55245[38]	R402235118	R402238231[201]	-	-	-	-
R44141628[269]	2-7/8 "	R429218X	R429218X[39]	R406532	R4090070[40]	-	-	-	-
23-123552-004[266]	2-7/8 "	R429218X	R429218X[39]	R406532	R4090070[40]	-	-	-	-
R44141608[267]	2-19/32 "	R42R55245	R42R55245[38]	R402235118	R402238231[201]	-	-	-	-
23-123572-004[271]	2-7/8 "	R429218X	R429218X[39]	R406532	R4090070[40]	-	-	-	-
R44141628[269]	2-7/8 "	R429218X	R429218X[39]	R406532	R4090070[40]	-	-	-	-
R44141629[269]	2-19/32 "	R42R55245	R42R55245[38]	R402235118	R402238231[201]	-	-	-	-
R44141629[269]	2-19/32 "	R42R55245	R42R55245[38]	R402235118	R402238231[201]	-	-	-	-
R44141628[269]	2-7/8 "	R429218X	R429218X[39]	R406532	R4090070[40]	-	-	-	-
23-123572-004[271]	2-7/8 "	R429218X	R429218X[39]	R406532	R4090070[40]	-	-	-	-
R44141627[270]	2-7/8 "	R429218X	R429218X[39]	R406532	R4090070[40]	-	-	-	-
23-123572-004[271]	2-7/8 "	R429218X	R429218X[39]	R406532	R4090070[40]	-	-	-	-
R44141627[270]	2-7/8 "	R429218X	R429218X[39]	R406532	R4090070[40]	-	-	-	-
R44141608[267]	2-19/32 "	R42R55245	R42R55245[38]	R402235118	R402238231[201]	-	-	-	-
R44141629[269]	2-7/8 "	R429218X	R429218X[39]	R406532	R4090070[40]	-	-	-	-
R44141627[270]	2-19/32 "	R42R55245	R42R55245[38]	R402235118	R402238231[201]	-	-	-	-
R44141476[268]	3-3/8 "	R42R55099	R42R55098[37]	R4066780	R4090021[201]	N/A[53]	-	R458635	R458635
R44141858[275]	3-3/8 "	R42R55099	R42R55098[37]	R4066780	R4090021[201]	N/A[53]	-	R458635	R458635
23-122920-002[273]	3-3/8 "	R42R55099	R42R55098[37]	R4066780	R4090021[201]	N/A[53]	-	R458636	R458636
23-123572-004[271]	3-3/8 "	R42R55099	R42R55098[37]	R4066780	R4090021[201]	N/A[53]	-	N/A	N/A
R44141476[268]	3-3/8 "	R42R55099	R42R55098[37]	R4066780	R4090021[201]	N/A[53]	-	N/A	N/A
R44141858[275]	3-3/8 "	R42R55099	R42R55098[37]	R4066780	R4090021[201]	N/A[53]	-	R458636	R458636
R44141858[275]	3-3/8 "	R42R55099	R42R55098[37]	R4066780	R4090021[201]	N/A[53]	-	N/A	N/A
23-123572-004[271]	3-3/8 "	R42R55099	R42R55098[37]	R4066780	R4090021[201]	N/A[53]	-	R458636	R458636
23-123552-004[266]	3-3/8 "	R42R55099	R42R55098[37]	R4066780	R4090021[201]	N/A[53]	-	R458635	R458635
R44141476[268]	3-3/8 "	R42R55099	R42R55098[37]	R4066780	R4090021[201]	N/A[53]	-	R458635	R458635
23-123572-004[271]	3-3/8 "	R42R55099	R42R55098[37]	R4066780	R4090021[201]	N/A[53]	-	R458635	R458635
23-123572-004[271]	3-3/8 "	R42R55099	R42R55098[37]	R4066780	R4090021[201]	N/A[53]	-	R458632	R458632
23-123572-004[271]	3-3/8 "	R42R55099	R42R55098[37]	R4066780	R4090021[201]	N/A[53]	-	R458632	R458632
R44141858[275]	3-3/8 "	R42R55099	R42R55098[37]	R4066780	R4090021[201]	N/A[53]	-	R458632	R458632
23-122920-002[273]	3-3/8 "	R42R55099	R42R55098[37]	R4066780	R4090021[201]	N/A[53]	-	R458632	R458632
R44141476[268]	3-3/8 "	R42R55099	R42R55098[37]	R4066780	R4090021[201]	N/A[53]	-	R458636	R458636
R44141858[275]	3-3/8 "	R42R55099	R42R55098[37]	R4066780	R4090021[201]	N/A[53]	-	N/A	N/A
R44141858[275]	3-3/8 "	R42R55099	R42R55098[37]	R4066780	R4090021[201]	N/A[53]	-	R458636	R458636
23-122920-002[273]	3-3/8 "	R42R55099	R42R55098[37]	R4066780	R4090021[201]	N/A[53]	-	R458632	R458632
23-122920-002[273]	3-3/8 "	R42R55099	R42R55098[37]	R4066780	R4090021[201]	N/A[53]	-	N/A	N/A
23-123572-004[271]	3-3/8 "	R42R55099	R42R55098[37]	R4066780	R4090021[201]	N/A[53]	-	N/A	N/A

269 - 5 Stud, U Shape

270 - 5 Stud, U Shape, .766 Dia. Studs

271 - 6 Stud, Hat Shape

272 - 6 Stud, U Shape

273 - 5 Stud, U Shape, .780 Dia. Studs

275 - 5 Stud, U Shape, .656 Dia. Studs

MAKE MODEL YEAR AXLE CODE AXLE WEIGHT	AXLE & BRK. TYPE	BRK. MFG.	BRAKE SIZE	FMSI	MERITOR DISC PAD OR BRAKE SHOE	MERITOR GUIDE PIN OR RETURN SPRING KIT	MERITOR CALIPER HWD. KIT OR RETURN SPRING KIT	MERITOR ADJUSTER KIT (LEFT WHEEL)	MERITOR ADJUSTER KIT (RIGHT WHEEL)
ITE(Cont.)									
170, 1700, 1710, 1723, 1724, 1750, 1753, 1754 SERIES CONVENTIONAL CAB, SCHOOL BUS, TILT CAB(Cont.)									
1987									
	Fd	BX		7108 - D184	MD184	R40H5010	R40H5519	NR	NR
	Fd	BX		7108 - D184	MD184	R40H5010	R40H5519	NR	NR
	Fd	BX		7108 - D184	MD184	R40H5010	R40H5519	NR	NR
	Fd	BX		7108 - D184	MD184	R40H5010	R40H5519	NR	NR
	Fd	BX		7108 - D184	MD184	R40H5010	R40H5519	NR	NR
	Fd	BX		7108 - D184	MD184	R40H5010	R40H5519	NR	NR
	Fd	BX		7108 - D184	MD184	R40H5010	R40H5519	NR	NR
	Fd	BX		7108 - D184	MD184	R40H5010	R40H5519	NR	NR
	Fd	BX		7108 - D184	MD184	R40H5010	R40H5519	NR	NR
	Fd	BX		7108 - D184	MD184	R40H5010	R40H5519	NR	NR
	Fd	BX		7108 - D184	MD184	R40H5010	R40H5519	NR	NR
	Fd	BX		7108 - D184	MD184	R40H5010	R40H5519	NR	NR
	Fd	BX		7108 - D184	MD184	R40H5010	R40H5519	NR	NR
	Fd	BX		7108 - D184	MD184	R40H5010	R40H5519	NR	NR
	Fd	BX		7108 - D184	MD184	R40H5010	R40H5519	NR	NR
	Fd	BX		7108 - D184	MD184	R40H5010	R40H5519	NR	NR
	Fd	BX		7108 - D184	MD184	R40H5010	R40H5519	NR	NR
	Fd	BX		7108 - D184	MD184	R40H5010	R40H5519	NR	NR
	Fd	BX		7108 - D184	MD184	R40H5010	R40H5519	NR	NR
S1723, S1753 School Bus FA101									
	Fd	BX		7108 - D184	MD184	R40H5010	R40H5519	NR	NR
	Fd	BX		7108 - D184	MD184	R40H5010	R40H5519	NR	NR
	Fd	BX		7108 - D184	MD184	R40H5010	R40H5519	NR	NR
	Fd	BX		7108 - D184	MD184	R40H5010	R40H5519	NR	NR
	Fd	BX		7108 - D184	MD184	R40H5010	R40H5519	NR	NR
	Fd	BX		7108 - D184	MD184	R40H5010	R40H5519	NR	NR
	Fd	BX		7108 - D184	MD184	R40H5010	R40H5519	NR	NR
	Fd	BX		7108 - D184	MD184	R40H5010	R40H5519	NR	NR
	Fd	BX		7108 - D184	MD184	R40H5010	R40H5519	NR	NR
	Fd	BX		7108 - D184	MD184	R40H5010	R40H5519	NR	NR
	Fd	BX		7108 - D184	MD184	R40H5010	R40H5519	NR	NR
	Fd	BX		7108 - D184	MD184	R40H5010	R40H5519	NR	NR
	Fd	BX		7108 - D184	MD184	R40H5010	R40H5519	NR	NR
	Fd	BX		7108 - D184	MD184	R40H5010	R40H5519	NR	NR
	Fd	BX		7108 - D184	MD184	R40H5010	R40H5519	NR	NR
	Fd	BX		7108 - D184	MD184	R40H5010	R40H5519	NR	NR
	Fd	BX		7108 - D184	MD184	R40H5010	R40H5519	NR	NR
	Fd	BX		7108 - D184	MD184	R40H5010	R40H5519	NR	NR
	Fd	BX		7108 - D184	MD184	R40H5010	R40H5519	NR	NR
	Fd	BX		7108 - D184	MD184	R40H5010	R40H5519	NR	NR
	Fd	BX		7108 - D184	MD184	R40H5010	R40H5519	NR	NR
	Fd	BX		7108 - D184	MD184	R40H5010	R40H5519	NR	NR
	Fd	BX		7108 - D184	MD184	R40H5010	R40H5519	NR	NR
	Fd	BX		7108 - D184	MD184	R40H5010	R40H5519	NR	NR
	Fd	BX		7108 - D184	MD184	R40H5010	R40H5519	NR	NR
	Fd	BX		7108 - D184	MD184	R40H5010	R40H5519	NR	NR
	Fd	BX		7108 - D184	MD184	R40H5010	R40H5519	NR	NR
S1723, S1753 School Bus FA309, 329, 339									
	Fd	BX		7142 - D225	MD225	R40H5010	R40H5522	NR	NR
	Fd	BX		7142 - D225	MD225	R40H5010	R40H5522	NR	NR
	Fd	BX		7142 - D225	MD225	R40H5010	R40H5522	NR	NR
	Fd	BX		7142 - D225	MD225	R40H5010	R40H5522	NR	NR
	Fd	BX		7142 - D225	MD225	R40H5010	R40H5522	NR	NR
	Fd	BX		7142 - D225	MD225	R40H5010	R40H5522	NR	NR
	Fd	BX		7142 - D225	MD225	R40H5010	R40H5522	NR	NR
	Fd	BX		7142 - D225	MD225	R40H5010	R40H5522	NR	NR
	Fd	BX		7142 - D225	MD225	R40H5010	R40H5522	NR	NR
	Fd	BX		7142 - D225	MD225	R40H5010	R40H5522	NR	NR
	Fd	BX		7142 - D225	MD225	R40H5010	R40H5522	NR	NR
	Fd	BX		7142 - D225	MD225	R40H5010	R40H5522	NR	NR
	Fd	BX		7142 - D225	MD225	R40H5010	R40H5522	NR	NR
	Fd	BX		7142 - D225	MD225	R40H5010	R40H5522	NR	NR
	Fd	BX		7142 - D225	MD225	R40H5010	R40H5522	NR	NR
	Fd	BX		7142 - D225	MD225	R40H5010	R40H5522	NR	NR
	Fd	BX		7142 - D225	MD225	R40H5010	R40H5522	NR	NR
	Fd	BX		7142 - D225	MD225	R40H5010	R40H5522	NR	NR
	Fd	BX		7142 - D225	MD225	R40H5010	R40H5522	NR	NR

37 - Also available as a New unit

38 - First design, may have external joining tube and uses steel pistons

39 - First design, uses steel pistons.

40 - For chrome plated steel version, use R4090070P

53 - Power Brakes

201 - Steel Piston

266 - 10 Stud, Hat Shaped

268 - 5 Stud, Hat Shape

271 - 6 Stud, Hat Shape

MERITOR DRUM OR ROTOR NO.	CALIPER OR CYLINDER BORE SIZE	MERITOR CALIPER OR WHEEL CYLINDER (LEFT)	MERITOR CALIPER OR WHEEL CYLINDER (RIGHT)	MERITOR CALIPER OR WHEEL CYLINDER REPAIR KIT	MERITOR CALIPER PISTON	MERITOR MASTER CYLINDER	MERITOR MASTER CYLINDER KIT	MERITOR BRAKE HOSE (LEFT)	MERITOR BRAKE HOSE (RIGHT)
									ITE(Cont.)
170, 1700, 1710, 1723, 1724, 1750, 1753, 1754 SERIES CONVENTIONAL CAB, SCHOOL BUS, TILT CAB(Cont.)									
23-123552-004[266]	3-3/8 "	R42R55099	R42R55098[37]	R4066780	R4090021[201]	N/A[53]	-	R458635	R458635
23-123572-004[271]	3-3/8 "	R42R55099	R42R55098[37]	R4066780	R4090021[201]	N/A[53]	-	R458636	R458636
23-123552-004[266]	3-3/8 "	R42R55099	R42R55098[37]	R4066780	R4090021[201]	N/A[53]	-	N/A	N/A
23-123552-004[266]	3-3/8 "	R42R55099	R42R55098[37]	R4066780	R4090021[201]	N/A[53]	-	N/A	N/A
23-123552-004[266]	3-3/8 "	R42R55099	R42R55098[37]	R4066780	R4090021[201]	N/A[53]	-	R458632	R458632
23-122920-002[273]	3-3/8 "	R42R55099	R42R55098[37]	R4066780	R4090021[201]	N/A[53]	-	R458635	R458635
R44141476[268]	3-3/8 "	R42R55099	R42R55098[37]	R4066780	R4090021[201]	N/A[53]	-	R458632	R458632
23-122920-002[273]	3-3/8 "	R42R55099	R42R55098[37]	R4066780	R4090021[201]	N/A[53]	-	N/A	N/A
R44141476[268]	3-3/8 "	R42R55099	R42R55098[37]	R4066780	R4090021[201]	N/A[53]	-	R458632	R458632
23-122920-002[273]	3-3/8 "	R42R55099	R42R55098[37]	R4066780	R4090021[201]	N/A[53]	-	R458635	R458635
R44141476[268]	3-3/8 "	R42R55099	R42R55098[37]	R4066780	R4090021[201]	N/A[53]	-	R458636	R458636
R44141858[275]	3-3/8 "	R42R55099	R42R55098[37]	R4066780	R4090021[201]	N/A[53]	-	R458632	R458632
23-123552-004[266]	3-3/8 "	R42R55099	R42R55098[37]	R4066780	R4090021[201]	N/A[53]	-	R458636	R458636
23-123552-004[266]	3-3/8 "	R42R55099	R42R55098[37]	R4066780	R4090021[201]	N/A[53]	-	R458636	R458636
23-122920-002[273]	3-3/8 "	R42R55099	R42R55098[37]	R4066780	R4090021[201]	N/A[53]	-	R458636	R458636
R44141476[268]	3-3/8 "	R42R55099	R42R55098[37]	R4066780	R4090021[201]	N/A[53]	-	N/A	N/A
23-123552-004[266]	3-3/8 "	R42R55099	R42R55098[37]	R4066780	R4090021[201]	N/A[53]	-	R458632	R458632
23-123572-004[271]	3-3/8 "	R42R55099	R42R55098[37]	R4066780	R4090021[201]	N/A[53]	-	R458635	R458635
R44141858[275]	3-3/8 "	R42R55099	R42R55098[37]	R4066780	R4090021[201]	N/A[53]	-	R458635	R458635
23-122920-002[273]	2-19/32 "	R42R55245	R42R55245[38]	R402235118	R402238231[201]	N/A[53]	-	R458636	R458636
23-123552-004[266]	2-19/32 "	R42R55245	R42R55245[38]	R402235118	R402238231[201]	N/A[53]	-	R458636	R458636
R44141858[275]	2-19/32 "	R42R55245	R42R55245[38]	R402235118	R402238231[201]	N/A[53]	-	R458632	R458632
23-123572-004[271]	2-19/32 "	R42R55245	R42R55245[38]	R402235118	R402238231[201]	N/A[53]	-	R458632	R458632
R44141476[268]	2-19/32 "	R42R55245	R42R55245[38]	R402235118	R402238231[201]	N/A[53]	-	R458632	R458632
23-122920-002[273]	2-19/32 "	R42R55245	R42R55245[38]	R402235118	R402238231[201]	N/A[53]	-	R458635	R458635
23-122527-002[272]	2-19/32 "	R42R55245	R42R55245[38]	R402235118	R402238231[201]	N/A[53]	-	N/A	N/A
23-122527-002[272]	2-19/32 "	R42R55245	R42R55245[38]	R402235118	R402238231[201]	N/A[53]	-	R458635	R458635
R44141476[268]	2-19/32 "	R42R55245	R42R55245[38]	R402235118	R402238231[201]	N/A[53]	-	R458636	R458636
23-123552-004[266]	2-19/32 "	R42R55245	R42R55245[38]	R402235118	R402238231[201]	N/A[53]	-	N/A	N/A
R44141858[275]	2-19/32 "	R42R55245	R42R55245[38]	R402235118	R402238231[201]	N/A[53]	-	R458635	R458635
23-123552-004[266]	2-19/32 "	R42R55245	R42R55245[38]	R402235118	R402238231[201]	N/A[53]	-	R458632	R458632
23-122527-002[272]	2-19/32 "	R42R55245	R42R55245[38]	R402235118	R402238231[201]	N/A[53]	-	R458636	R458636
23-123572-004[271]	2-19/32 "	R42R55245	R42R55245[38]	R402235118	R402238231[201]	N/A[53]	-	R458635	R458635
R44141476[268]	2-19/32 "	R42R55245	R42R55245[38]	R402235118	R402238231[201]	N/A[53]	-	N/A	N/A
23-123552-004[266]	2-19/32 "	R42R55245	R42R55245[38]	R402235118	R402238231[201]	N/A[53]	-	R458635	R458635
23-123572-004[271]	2-19/32 "	R42R55245	R42R55245[38]	R402235118	R402238231[201]	N/A[53]	-	R458636	R458636
R44141858[275]	2-19/32 "	R42R55245	R42R55245[38]	R402235118	R402238231[201]	N/A[53]	-	N/A	N/A
23-122920-002[273]	2-19/32 "	R42R55245	R42R55245[38]	R402235118	R402238231[201]	N/A[53]	-	R458632	R458632
R44141476[268]	2-19/32 "	R42R55245	R42R55245[38]	R402235118	R402238231[201]	N/A[53]	-	R458635	R458635
23-122920-002[273]	2-19/32 "	R42R55245	R42R55245[38]	R402235118	R402238231[201]	N/A[53]	-	N/A	N/A
R44141858[275]	2-19/32 "	R42R55245	R42R55245[38]	R402235118	R402238231[201]	N/A[53]	-	R458636	R458636
23-122527-002[272]	2-19/32 "	R42R55245	R42R55245[38]	R402235118	R402238231[201]	N/A[53]	-	R458632	R458632
23-123572-004[271]	2-19/32 "	R42R55245	R42R55245[38]	R402235118	R402238231[201]	N/A[53]	-	N/A	N/A
23-122527-002[272]	2-7/8 "	R429218X	R429218X[39]	R406532	R4090070[40]	N/A[53]	-	R458636	R458636
R44141858[275]	2-7/8 "	R429218X	R429218X[39]	R406532	R4090070[40]	N/A[53]	-	N/A	N/A
23-122920-002[273]	2-7/8 "	R429218X	R429218X[39]	R406532	R4090070[40]	N/A[53]	-	N/A	N/A
23-122920-002[273]	2-7/8 "	R429218X	R429218X[39]	R406532	R4090070[40]	N/A[53]	-	N/A	N/A
23-122920-002[273]	2-7/8 "	R429218X	R429218X[39]	R406532	R4090070[40]	N/A[53]	-	R458636	R458636
23-123552-004[266]	2-7/8 "	R429218X	R429218X[39]	R406532	R4090070[40]	N/A[53]	-	N/A	N/A
23-122527-002[272]	2-7/8 "	R429218X	R429218X[39]	R406532	R4090070[40]	N/A[53]	-	R458632	R458632
R44141476[268]	2-7/8 "	R429218X	R429218X[39]	R406532	R4090070[40]	N/A[53]	-	N/A	N/A
R44141476[268]	2-7/8 "	R429218X	R429218X[39]	R406532	R4090070[40]	N/A[53]	-	R458632	R458632
23-122920-002[273]	2-7/8 "	R429218X	R429218X[39]	R406532	R4090070[40]	N/A[53]	-	R458635	R458635
R44141476[268]	2-7/8 "	R429218X	R429218X[39]	R406532	R4090070[40]	N/A[53]	-	R458635	R458635
23-122527-002[272]	2-7/8 "	R429218X	R429218X[39]	R406532	R4090070[40]	N/A[53]	-	R458635	R458635
R44141476[268]	2-7/8 "	R429218X	R429218X[39]	R406532	R4090070[40]	N/A[53]	-	N/A	N/A
23-122527-002[272]	2-7/8 "	R429218X	R429218X[39]	R406532	R4090070[40]	N/A[53]	-	R458632	R458632
23-122920-002[273]	2-7/8 "	R429218X	R429218X[39]	R406532	R4090070[40]	N/A[53]	-	R458636	R458636
23-122920-002[273]	2-7/8 "	R429218X	R429218X[39]	R406532	R4090070[40]	N/A[53]	-	N/A	N/A
R44141858[275]	2-7/8 "	R429218X	R429218X[39]	R406532	R4090070[40]	N/A[53]	-	R458632	R458632
R44141476[268]	2-7/8 "	R429218X	R429218X[39]	R406532	R4090070[40]	N/A[53]	-	N/A	N/A

272 - 6 Stud, U Shape

273 - 5 Stud, U Shape, .780 Dia. Studs

275 - 5 Stud, U Shape, .656 Dia. Studs

MAKE MODEL YEAR AXLE CODE AXLE WEIGHT	AXLE & BRK. TYPE	BRK. MFG.	BRAKE SIZE	FMSI	MERITOR DISC PAD OR BRAKE SHOE	MERITOR GUIDE PIN OR RETURN SPRING KIT	MERITOR CALIPER HWD. KIT OR RETURN SPRING KIT	MERITOR ADJUSTER KIT (LEFT WHEEL)	MERITOR ADJUSTER KIT (RIGHT WHEEL)
ITE(Cont.)									
170, 1700, 1710, 1723, 1724, 1750, 1753, 1754 SERIES CONVENTIONAL CAB, SCHOOL BUS, TILT CAB(Cont.)									
1987									
	Fd	BX		7142 - D225	MD225	R40H5010	R40H5522	NR	NR
	Fd	BX		7142 - D225	MD225	R40H5010	R40H5522	NR	NR
	Fd	BX		7142 - D225	MD225	R40H5010	R40H5522	NR	NR
	Fd	BX		7142 - D225	MD225	R40H5010	R40H5522	NR	NR
	Fd	BX		7142 - D225	MD225	R40H5010	R40H5522	NR	NR
	Fd	BX		7142 - D225	MD225	R40H5010	R40H5522	NR	NR
	Fd	BX		7142 - D225	MD225	R40H5010	R40H5522	NR	NR
	Fd	BX		7142 - D225	MD225	R40H5010	R40H5522	NR	NR
	Fd	BX		7142 - D225	MD225	R40H5010	R40H5522	NR	NR
	Fd	BX		7142 - D225	MD225	R40H5010	R40H5522	NR	NR
	Fd	BX		7142 - D225	MD225	R40H5010	R40H5522	NR	NR
	Fd	BX		7142 - D225	MD225	R40H5010	R40H5522	NR	NR
	Fd	BX		7142 - D225	MD225	R40H5010	R40H5522	NR	NR
	Fd	BX		7142 - D225	MD225	R40H5010	R40H5522	NR	NR
	Fd	BX		7142 - D225	MD225	R40H5010	R40H5522	NR	NR
	Fd	BX		7142 - D225	MD225	R40H5010	R40H5522	NR	NR
	Fd	BX		7142 - D225	MD225	R40H5010	R40H5522	NR	NR
	Fd	BX		7142 - D225	MD225	R40H5010	R40H5522	NR	NR
	Fd	BX		7142 - D225	MD225	R40H5010	R40H5522	NR	NR
	Fd	BX		7142 - D225	MD225	R40H5010	R40H5522	NR	NR
	Fd	BX		7142 - D225	MD225	R40H5010	R40H5522	NR	NR
	Fd	BX		7142 - D225	MD225	R40H5010	R40H5522	NR	NR
	Fd	BX		7142 - D225	MD225	R40H5010	R40H5522	NR	NR
	Fd	BX		7142 - D225	MD225	R40H5010	R40H5522	NR	NR
	Fd	BX		7142 - D225	MD225	R40H5010	R40H5522	NR	NR
	Fd	BX		7142 - D225	MD225	R40H5010	R40H5522	NR	NR
	Fd	BX		7142 - D225	MD225	R40H5010	R40H5522	NR	NR
	Fd	BX		7142 - D225	MD225	R40H5010	R40H5522	NR	NR
	Fd	BX		7142 - D225	MD225	R40H5010	R40H5522	NR	NR
	Fd	BX		7142 - D225	MD225	R40H5010	R40H5522	NR	NR
	Fd	BX		7142 - D225	MD225	R40H5010	R40H5522	NR	NR
	Fd	BX		7142 - D225	MD225	R40H5010	R40H5522	NR	NR
	Fd	BX		7142 - D225	MD225	R40H5010	R40H5522	NR	NR
	Fd	BX		7142 - D225	MD225	R40H5010	R40H5522	NR	NR
	Fd	BX		7142 - D225	MD225	R40H5010	R40H5522	NR	NR
	Fd	BX		7142 - D225	MD225	R40H5010	R40H5522	NR	NR
	Fd	BX		7142 - D225	MD225	R40H5010	R40H5522	NR	NR
	Fd	BX		7142 - D225	MD225	R40H5010	R40H5522	NR	NR
	Fd	BX		7142 - D225	MD225	R40H5010	R40H5522	NR	NR
	Fd	BX		7142 - D225	MD225	R40H5010	R40H5522	NR	NR
	Fd	BX		7142 - D225	MD225	R40H5010	R40H5522	NR	NR
	Fd	BX		7142 - D225	MD225	R40H5010	R40H5522	NR	NR
	Fd	BX		7142 - D225	MD225	R40H5010	R40H5522	NR	NR
	Fd	BX		7142 - D225	MD225	R40H5010	R40H5522	NR	NR
	Fd	BX		7142 - D225	MD225	R40H5010	R40H5522	NR	NR
	Fd	BX		7142 - D225	MD225	R40H5010	R40H5522	NR	NR
	Fd	BX		7142 - D225	MD225	R40H5010	R40H5522	NR	NR
	Fd	BX		7142 - D225	MD225	R40H5010	R40H5522	NR	NR
	Fd	BX		7142 - D225	MD225	R40H5010	R40H5522	NR	NR
	Fd	BX		7142 - D225	MD225	R40H5010	R40H5522	NR	NR
	Fd	BX		7142 - D225	MD225	R40H5010	R40H5522	NR	NR
	Fd	BX		7142 - D225	MD225	R40H5010	R40H5522	NR	NR
	Fd	BX		7142 - D225	MD225	R40H5010	R40H5522	NR	NR
	Fd	BX		7142 - D225	MD225	R40H5010	R40H5522	NR	NR
	Fd	BX		7142 - D225	MD225	R40H5010	R40H5522	NR	NR
	Fd	BX		7142 - D225	MD225	R40H5010	R40H5522	NR	NR
	Fd	BX		7142 - D225	MD225	R40H5010	R40H5522	NR	NR
	Fd	BX		7142 - D225	MD225	R40H5010	R40H5522	NR	NR
	Fd	BX		7142 - D225	MD225	R40H5010	R40H5522	NR	NR
	Fd	BX		7142 - D225	MD225	R40H5010	R40H5522	NR	NR
	Fd	BX		7142 - D225	MD225	R40H5010	R40H5522	NR	NR
	Fd	BX		7142 - D225	MD225	R40H5010	R40H5522	NR	NR
	Fd	BX		7142 - D225	MD225	R40H5010	R40H5522	NR	NR

39 - First design, uses steel pistons.
40 - For chrome plated steel version, use R4090070P
53 - Power Brakes
266 - 10 Stud, Hat Shaped
268 - 5 Stud, Hat Shape
271 - 6 Stud, Hat Shape
272 - 6 Stud, U Shape
273 - 5 Stud, U Shape, .780 Dia. Studs
275 - 5 Stud, U Shape, .656 Dia. Studs

MERITOR DRUM OR ROTOR NO.	CALIPER OR CYLINDER BORE SIZE	MERITOR CALIPER OR WHEEL CYLINDER (LEFT)	MERITOR CALIPER OR WHEEL CYLINDER (RIGHT)	MERITOR CALIPER OR WHEEL CYLINDER REPAIR KIT	MERITOR CALIPER PISTON	MERITOR MASTER CYLINDER	MERITOR MASTER CYLINDER KIT	MERITOR BRAKE HOSE (LEFT)	MERITOR BRAKE HOSE (RIGHT)
									ITE(Cont.)
170, 1700, 1710, 1723, 1724, 1750, 1753, 1754 SERIES CONVENTIONAL CAB, SCHOOL BUS, TILT CAB(Cont.)									
23-122527-002[272]	2-7/8 "	R429218X	R429218X[39]	R406532	R4090070[40]	N/A[53]	-	R458632	R458632
R44141476[268]	2-7/8 "	R429218X	R429218X[39]	R406532	R4090070[40]	N/A[53]	-	R458636	R458636
23-123552-004[266]	2-7/8 "	R429218X	R429218X[39]	R406532	R4090070[40]	N/A[53]	-	R458635	R458635
23-123572-004[271]	2-7/8 "	R429218X	R429218X[39]	R406532	R4090070[40]	N/A[53]	-	R458632	R458632
23-123552-004[266]	2-7/8 "	R429218X	R429218X[39]	R406532	R4090070[40]	N/A[53]	-	R458635	R458635
23-122527-002[272]	2-7/8 "	R429218X	R429218X[39]	R406532	R4090070[40]	N/A[53]	-	N/A	N/A
R44141476[268]	2-7/8 "	R429218X	R429218X[39]	R406532	R4090070[40]	N/A[53]	-	R458632	R458632
23-123572-004[271]	2-7/8 "	R429218X	R429218X[39]	R406532	R4090070[40]	N/A[53]	-	R458632	R458632
23-123552-004[266]	2-7/8 "	R429218X	R429218X[39]	R406532	R4090070[40]	N/A[53]	-	R458635	R458635
R44141858[275]	2-7/8 "	R429218X	R429218X[39]	R406532	R4090070[40]	N/A[53]	-	R458632	R458632
23-122920-002[273]	2-7/8 "	R429218X	R429218X[39]	R406532	R4090070[40]	N/A[53]	-	R458632	R458632
23-122527-002[272]	2-7/8 "	R429218X	R429218X[39]	R406532	R4090070[40]	N/A[53]	-	N/A	N/A
23-122527-002[272]	2-7/8 "	R429218X	R429218X[39]	R406532	R4090070[40]	N/A[53]	-	R458635	R458635
R44141476[268]	2-7/8 "	R429218X	R429218X[39]	R406532	R4090070[40]	N/A[53]	-	R458635	R458635
23-123552-004[266]	2-7/8 "	R429218X	R429218X[39]	R406532	R4090070[40]	N/A[53]	-	R458636	R458636
23-122527-002[272]	2-7/8 "	R429218X	R429218X[39]	R406532	R4090070[40]	N/A[53]	-	N/A	N/A
23-122920-002[273]	2-7/8 "	R429218X	R429218X[39]	R406532	R4090070[40]	N/A[53]	-	R458632	R458632
23-123572-004[271]	2-7/8 "	R429218X	R429218X[39]	R406532	R4090070[40]	N/A[53]	-	R458636	R458636
23-122527-002[272]	2-7/8 "	R429218X	R429218X[39]	R406532	R4090070[40]	N/A[53]	-	R458635	R458635
23-123552-004[266]	2-7/8 "	R429218X	R429218X[39]	R406532	R4090070[40]	N/A[53]	-	R458632	R458632
R44141476[268]	2-7/8 "	R429218X	R429218X[39]	R406532	R4090070[40]	N/A[53]	-	R458636	R458636
R44141858[275]	2-7/8 "	R429218X	R429218X[39]	R406532	R4090070[40]	N/A[53]	-	R458636	R458636
23-123572-004[271]	2-7/8 "	R429218X	R429218X[39]	R406532	R4090070[40]	N/A[53]	-	R458635	R458635
R44141858[275]	2-7/8 "	R429218X	R429218X[39]	R406532	R4090070[40]	N/A[53]	-	R458632	R458632
R44141476[268]	2-7/8 "	R429218X	R429218X[39]	R406532	R4090070[40]	N/A[53]	-	R458635	R458635
23-123552-004[266]	2-7/8 "	R429218X	R429218X[39]	R406532	R4090070[40]	N/A[53]	-	N/A	N/A
23-123572-004[271]	2-7/8 "	R429218X	R429218X[39]	R406532	R4090070[40]	N/A[53]	-	N/A	N/A
23-122920-002[273]	2-7/8 "	R429218X	R429218X[39]	R406532	R4090070[40]	N/A[53]	-	R458632	R458632
23-123552-004[266]	2-7/8 "	R429218X	R429218X[39]	R406532	R4090070[40]	N/A[53]	-	N/A	N/A
R44141858[275]	2-7/8 "	R429218X	R429218X[39]	R406532	R4090070[40]	N/A[53]	-	R458635	R458635
R44141858[275]	2-7/8 "	R429218X	R429218X[39]	R406532	R4090070[40]	N/A[53]	-	N/A	N/A
R44141476[268]	2-7/8 "	R429218X	R429218X[39]	R406532	R4090070[40]	N/A[53]	-	N/A	N/A
23-123572-004[271]	2-7/8 "	R429218X	R429218X[39]	R406532	R4090070[40]	N/A[53]	-	R458636	R458636
R44141858[275]	2-7/8 "	R429218X	R429218X[39]	R406532	R4090070[40]	N/A[53]	-	R458635	R458635
23-123572-004[271]	2-7/8 "	R429218X	R429218X[39]	R406532	R4090070[40]	N/A[53]	-	R458632	R458632
R44141476[268]	2-7/8 "	R429218X	R429218X[39]	R406532	R4090070[40]	N/A[53]	-	R458636	R458636
23-122527-002[272]	2-7/8 "	R429218X	R429218X[39]	R406532	R4090070[40]	N/A[53]	-	R458635	R458635
23-122920-002[273]	2-7/8 "	R429218X	R429218X[39]	R406532	R4090070[40]	N/A[53]	-	R458635	R458635
23-122527-002[272]	2-7/8 "	R429218X	R429218X[39]	R406532	R4090070[40]	N/A[53]	-	R458636	R458636
23-122920-002[273]	2-7/8 "	R429218X	R429218X[39]	R406532	R4090070[40]	N/A[53]	-	R458636	R458636
R44141476[268]	2-7/8 "	R429218X	R429218X[39]	R406532	R4090070[40]	N/A[53]	-	R458635	R458635
23-122527-002[272]	2-7/8 "	R429218X	R429218X[39]	R406532	R4090070[40]	N/A[53]	-	R458635	R458635
R44141476[268]	2-7/8 "	R429218X	R429218X[39]	R406532	R4090070[40]	N/A[53]	-	R458632	R458632
23-122920-002[273]	2-7/8 "	R429218X	R429218X[39]	R406532	R4090070[40]	N/A[53]	-	R458632	R458632
23-123572-004[271]	2-7/8 "	R429218X	R429218X[39]	R406532	R4090070[40]	N/A[53]	-	R458635	R458635
23-122920-002[273]	2-7/8 "	R429218X	R429218X[39]	R406532	R4090070[40]	N/A[53]	-	R458635	R458635
23-122527-002[272]	2-7/8 "	R429218X	R429218X[39]	R406532	R4090070[40]	N/A[53]	-	R458632	R458632
23-123572-004[271]	2-7/8 "	R429218X	R429218X[39]	R406532	R4090070[40]	N/A[53]	-	R458635	R458635
23-123552-004[266]	2-7/8 "	R429218X	R429218X[39]	R406532	R4090070[40]	N/A[53]	-	R458632	R458632
R44141858[275]	2-7/8 "	R429218X	R429218X[39]	R406532	R4090070[40]	N/A[53]	-	R458635	R458635
R44141858[275]	2-7/8 "	R429218X	R429218X[39]	R406532	R4090070[40]	N/A[53]	-	R458636	R458636
R44141858[275]	2-7/8 "	R429218X	R429218X[39]	R406532	R4090070[40]	N/A[53]	-	N/A	N/A
23-123572-004[271]	2-7/8 "	R429218X	R429218X[39]	R406532	R4090070[40]	N/A[53]	-	R458632	R458632
23-122527-002[272]	2-7/8 "	R429218X	R429218X[39]	R406532	R4090070[40]	N/A[53]	-	R458632	R458632
R44141476[268]	2-7/8 "	R429218X	R429218X[39]	R406532	R4090070[40]	N/A[53]	-	R458636	R458636
23-123572-004[271]	2-7/8 "	R429218X	R429218X[39]	R406532	R4090070[40]	N/A[53]	-	R458635	R458635
R44141858[275]	2-7/8 "	R429218X	R429218X[39]	R406532	R4090070[40]	N/A[53]	-	R458635	R458635
23-123572-004[271]	2-7/8 "	R429218X	R429218X[39]	R406532	R4090070[40]	N/A[53]	-	N/A	N/A
R44141858[275]	2-7/8 "	R429218X	R429218X[39]	R406532	R4090070[40]	N/A[53]	-	N/A	N/A
R44141858[275]	2-7/8 "	R429218X	R429218X[39]	R406532	R4090070[40]	N/A[53]	-	R458635	R458635
23-122920-002[273]	2-7/8 "	R429218X	R429218X[39]	R406532	R4090070[40]	N/A[53]	-	N/A	N/A
23-123572-004[271]	2-7/8 "	R429218X	R429218X[39]	R406532	R4090070[40]	N/A[53]	-	R458632	R458632
23-123552-004[266]	2-7/8 "	R429218X	R429218X[39]	R406532	R4090070[40]	N/A[53]	-	R458635	R458635

MAKE MODEL YEAR AXLE CODE AXLE WEIGHT	AXLE & BRK. TYPE	BRK. MFG.	BRAKE SIZE	FMSI	MERITOR DISC PAD OR BRAKE SHOE	MERITOR GUIDE PIN OR RETURN SPRING KIT	MERITOR CALIPER HWD. KIT OR RETURN SPRING KIT	MERITOR ADJUSTER KIT (LEFT WHEEL)	MERITOR ADJUSTER KIT (RIGHT WHEEL)
ITE(Cont.)									
170, 1700, 1710, 1723, 1724, 1750, 1753, 1754 SERIES CONVENTIONAL CAB, SCHOOL BUS, TILT CAB(Cont.)									
1987									
	Fd	BX		7142 - D225	MD225	R40H5010	R40H5522	NR	NR
	Fd	BX		7142 - D225	MD225	R40H5010	R40H5522	NR	NR
	Fd	BX		7142 - D225	MD225	R40H5010	R40H5522	NR	NR
	Fd	BX		7142 - D225	MD225	R40H5010	R40H5522	NR	NR
	Fd	BX		7142 - D225	MD225	R40H5010	R40H5522	NR	NR
	Fd	BX		7142 - D225	MD225	R40H5010	R40H5522	NR	NR
	Fd	BX		7142 - D225	MD225	R40H5010	R40H5522	NR	NR
	Fd	BX		7142 - D225	MD225	R40H5010	R40H5522	NR	NR
	Fd	BX		7142 - D225	MD225	R40H5010	R40H5522	NR	NR
	Fd	BX		7142 - D225	MD225	R40H5010	R40H5522	NR	NR
	Fd	BX		7142 - D225	MD225	R40H5010	R40H5522	NR	NR
	Fd	BX		7142 - D225	MD225	R40H5010	R40H5522	NR	NR
	Fd	BX		7142 - D225	MD225	R40H5010	R40H5522	NR	NR
	Fd	BX		7142 - D225	MD225	R40H5010	R40H5522	NR	NR
	Fd	BX		7142 - D225	MD225	R40H5010	R40H5522	NR	NR
	Fd	BX		7142 - D225	MD225	R40H5010	R40H5522	NR	NR
	Fd	BX		7142 - D225	MD225	R40H5010	R40H5522	NR	NR
	Fd	BX		7142 - D225	MD225	R40H5010	R40H5522	NR	NR
	Fd	BX		7142 - D225	MD225	R40H5010	R40H5522	NR	NR
	Fd	BX		7142 - D225	MD225	R40H5010	R40H5522	NR	NR
	Fd	BX		7142 - D225	MD225	R40H5010	R40H5522	NR	NR
	Fd	BX		7142 - D225	MD225	R40H5010	R40H5522	NR	NR
	Fd	BX		7142 - D225	MD225	R40H5010	R40H5522	NR	NR
	Fd	BX		7142 - D225	MD225	R40H5010	R40H5522	NR	NR
	Fd	BX		7142 - D225	MD225	R40H5010	R40H5522	NR	NR
	Fd	BX		7142 - D225	MD225	R40H5010	R40H5522	NR	NR
	Fd	BX		7142 - D225	MD225	R40H5010	R40H5522	NR	NR
	Fd	BX		7142 - D225	MD225	R40H5010	R40H5522	NR	NR
	Fd	BX		7142 - D225	MD225	R40H5010	R40H5522	NR	NR
	Fd	BX		7142 - D225	MD225	R40H5010	R40H5522	NR	NR
	Fd	BX		7142 - D225	MD225	R40H5010	R40H5522	NR	NR
	Fd	BX		7142 - D225	MD225	R40H5010	R40H5522	NR	NR
	Fd	BX		7142 - D225	MD225	R40H5010	R40H5522	NR	NR
	Fd	BX		7142 - D225	MD225	R40H5010	R40H5522	NR	NR
	Fd	BX		7142 - D225	MD225	R40H5010	R40H5522	NR	NR
	Fd	BX		7142 - D225	MD225	R40H5010	R40H5522	NR	NR
	Fd	BX		7142 - D225	MD225	R40H5010	R40H5522	NR	NR
	Fd	BX		7142 - D225	MD225	R40H5010	R40H5522	NR	NR
	Fd	BX		7142 - D225	MD225	R40H5010	R40H5522	NR	NR
	Fd	BX		7142 - D225	MD225	R40H5010	R40H5522	NR	NR
	Fd	BX		7142 - D225	MD225	R40H5010	R40H5522	NR	NR
	Fd	BX		7142 - D225	MD225	R40H5010	R40H5522	NR	NR
	Fd	BX		7142 - D225	MD225	R40H5010	R40H5522	NR	NR
	Fd	BX		7142 - D225	MD225	R40H5010	R40H5522	NR	NR
	Fd	BX		7142 - D225	MD225	R40H5010	R40H5522	NR	NR
	Fd	BX		7142 - D225	MD225	R40H5010	R40H5522	NR	NR
	Fd	BX		7142 - D225	MD225	R40H5010	R40H5522	NR	NR
	Fd	BX		7142 - D225	MD225	R40H5010	R40H5522	NR	NR
	Fd	BX		7142 - D225	MD225	R40H5010	R40H5522	NR	NR
	Fd	BX		7142 - D225	MD225	R40H5010	R40H5522	NR	NR
	Fd	BX		7142 - D225	MD225	R40H5010	R40H5522	NR	NR
	Fd	BX		7142 - D225	MD225	R40H5010	R40H5522	NR	NR
	Fd	BX		7142 - D225	MD225	R40H5010	R40H5522	NR	NR
	Fd	BX		7142 - D225	MD225	R40H5010	R40H5522	NR	NR
	Fd	BX		7142 - D225	MD225	R40H5010	R40H5522	NR	NR
	Fd	BX		7142 - D225	MD225	R40H5010	R40H5522	NR	NR
	Fd	BX		7142 - D225	MD225	R40H5010	R40H5522	NR	NR
	Fd	BX		7142 - D225	MD225	R40H5010	R40H5522	NR	NR
	Fd	BX		7142 - D225	MD225	R40H5010	R40H5522	NR	NR
S1723, S1753 School Bus									
FA73	Fd	BX		7108 - D184	MD184	R40H5010	R40H5519	NR	NR
	Fd	BX		7108 - D184	MD184	R40H5010	R40H5519	NR	NR
	Fd	BX		7108 - D184	MD184	R40H5010	R40H5519	NR	NR

37 - Also available as a New unit
53 - Power Brakes
268 - 5 Stud, Hat Shape
39 - First design, uses steel pistons.
201 - Steel Piston
271 - 6 Stud, Hat Shape
40 - For chrome plated steel version, use R4090070P
266 - 10 Stud, Hat Shaped
272 - 6 Stud, U Shape

MERITOR DRUM OR ROTOR NO.	CALIPER OR CYLINDER BORE SIZE	MERITOR CALIPER OR WHEEL CYLINDER (LEFT)	MERITOR CALIPER OR WHEEL CYLINDER (RIGHT)	MERITOR CALIPER OR WHEEL CYLINDER REPAIR KIT	MERITOR CALIPER PISTON	MERITOR MASTER CYLINDER	MERITOR MASTER CYLINDER KIT	MERITOR BRAKE HOSE (LEFT)	MERITOR BRAKE HOSE (RIGHT)
									ITE(Cont.)
170, 1700, 1710, 1723, 1724, 1750, 1753, 1754 SERIES CONVENTIONAL CAB, SCHOOL BUS, TILT CAB(Cont.)									
23-123552-004[266]	2-7/8 "	R429218X	R429218X[39]	R406532	R4090070[40]	N/A[53]	-	R458632	R458632
23-122527-002[272]	2-7/8 "	R429218X	R429218X[39]	R406532	R4090070[40]	N/A[53]	-	R458632	R458632
23-122920-002[273]	2-7/8 "	R429218X	R429218X[39]	R406532	R4090070[40]	N/A[53]	-	R458636	R458636
23-123572-004[271]	2-7/8 "	R429218X	R429218X[39]	R406532	R4090070[40]	N/A[53]	-	N/A	N/A
R44141476[268]	2-7/8 "	R429218X	R429218X[39]	R406532	R4090070[40]	N/A[53]	-	R458636	R458636
R44141858[275]	2-7/8 "	R429218X	R429218X[39]	R406532	R4090070[40]	N/A[53]	-	R458635	R458635
R44141858[275]	2-7/8 "	R429218X	R429218X[39]	R406532	R4090070[40]	N/A[53]	-	N/A	N/A
R44141858[275]	2-7/8 "	R429218X	R429218X[39]	R406532	R4090070[40]	N/A[53]	-	N/A	N/A
R44141476[268]	2-7/8 "	R429218X	R429218X[39]	R406532	R4090070[40]	N/A[53]	-	R458632	R458632
R44141476[268]	2-7/8 "	R429218X	R429218X[39]	R406532	R4090070[40]	N/A[53]	-	R458636	R458636
23-123572-004[271]	2-7/8 "	R429218X	R429218X[39]	R406532	R4090070[40]	N/A[53]	-	N/A	N/A
23-122920-002[273]	2-7/8 "	R429218X	R429218X[39]	R406532	R4090070[40]	N/A[53]	-	R458636	R458636
23-122527-002[272]	2-7/8 "	R429218X	R429218X[39]	R406532	R4090070[40]	N/A[53]	-	N/A	N/A
23-123552-004[266]	2-7/8 "	R429218X	R429218X[39]	R406532	R4090070[40]	N/A[53]	-	N/A	N/A
R44141476[268]	2-7/8 "	R429218X	R429218X[39]	R406532	R4090070[40]	N/A[53]	-	R458632	R458632
23-122920-002[273]	2-7/8 "	R429218X	R429218X[39]	R406532	R4090070[40]	N/A[53]	-	R458635	R458635
23-123572-004[271]	2-7/8 "	R429218X	R429218X[39]	R406532	R4090070[40]	N/A[53]	-	R458635	R458635
23-123552-004[266]	2-7/8 "	R429218X	R429218X[39]	R406532	R4090070[40]	N/A[53]	-	R458636	R458636
R44141858[275]	2-7/8 "	R429218X	R429218X[39]	R406532	R4090070[40]	N/A[53]	-	R458636	R458636
23-123552-004[266]	2-7/8 "	R429218X	R429218X[39]	R406532	R4090070[40]	N/A[53]	-	N/A	N/A
23-122920-002[273]	2-7/8 "	R429218X	R429218X[39]	R406532	R4090070[40]	N/A[53]	-	N/A	N/A
23-123572-004[271]	2-7/8 "	R429218X	R429218X[39]	R406532	R4090070[40]	N/A[53]	-	R458635	R458635
23-122527-002[272]	2-7/8 "	R429218X	R429218X[39]	R406532	R4090070[40]	N/A[53]	-	N/A	N/A
R44141858[275]	2-7/8 "	R429218X	R429218X[39]	R406532	R4090070[40]	N/A[53]	-	R458632	R458632
23-123572-004[271]	2-7/8 "	R429218X	R429218X[39]	R406532	R4090070[40]	N/A[53]	-	R458636	R458636
23-122527-002[272]	2-7/8 "	R429218X	R429218X[39]	R406532	R4090070[40]	N/A[53]	-	R458636	R458636
23-123552-004[266]	2-7/8 "	R429218X	R429218X[39]	R406532	R4090070[40]	N/A[53]	-	R458636	R458636
23-122527-002[272]	2-7/8 "	R429218X	R429218X[39]	R406532	R4090070[40]	N/A[53]	-	R458635	R458635
R44141858[275]	2-7/8 "	R429218X	R429218X[39]	R406532	R4090070[40]	N/A[53]	-	R458636	R458636
23-123552-004[266]	2-7/8 "	R429218X	R429218X[39]	R406532	R4090070[40]	N/A[53]	-	R458636	R458636
23-123552-004[266]	2-7/8 "	R429218X	R429218X[39]	R406532	R4090070[40]	N/A[53]	-	R458635	R458635
R44141476[268]	2-7/8 "	R429218X	R429218X[39]	R406532	R4090070[40]	N/A[53]	-	R458632	R458632
23-122920-002[273]	2-7/8 "	R429218X	R429218X[39]	R406532	R4090070[40]	N/A[53]	-	R458635	R458635
R44141476[268]	2-7/8 "	R429218X	R429218X[39]	R406532	R4090070[40]	N/A[53]	-	N/A	N/A
R44141476[268]	2-7/8 "	R429218X	R429218X[39]	R406532	R4090070[40]	N/A[53]	-	R458635	R458635
R44141858[275]	2-7/8 "	R429218X	R429218X[39]	R406532	R4090070[40]	N/A[53]	-	R458632	R458632
23-122527-002[272]	2-7/8 "	R429218X	R429218X[39]	R406532	R4090070[40]	N/A[53]	-	R458636	R458636
23-122527-002[272]	2-7/8 "	R429218X	R429218X[39]	R406532	R4090070[40]	N/A[53]	-	R458636	R458636
23-122527-002[272]	2-7/8 "	R429218X	R429218X[39]	R406532	R4090070[40]	N/A[53]	-	N/A	N/A
23-122920-002[273]	2-7/8 "	R429218X	R429218X[39]	R406532	R4090070[40]	N/A[53]	-	R458632	R458632
23-123572-004[271]	2-7/8 "	R429218X	R429218X[39]	R406532	R4090070[40]	N/A[53]	-	R458636	R458636
23-123552-004[266]	2-7/8 "	R429218X	R429218X[39]	R406532	R4090070[40]	N/A[53]	-	R458632	R458632
R44141476[268]	2-7/8 "	R429218X	R429218X[39]	R406532	R4090070[40]	N/A[53]	-	N/A	N/A
R44141858[275]	2-7/8 "	R429218X	R429218X[39]	R406532	R4090070[40]	N/A[53]	-	R458636	R458636
23-123572-004[271]	2-7/8 "	R429218X	R429218X[39]	R406532	R4090070[40]	N/A[53]	-	N/A	N/A
23-123572-004[271]	2-7/8 "	R429218X	R429218X[39]	R406532	R4090070[40]	N/A[53]	-	R458636	R458636
23-123552-004[266]	2-7/8 "	R429218X	R429218X[39]	R406532	R4090070[40]	N/A[53]	-	R458636	R458636
23-123552-004[266]	2-7/8 "	R429218X	R429218X[39]	R406532	R4090070[40]	N/A[53]	-	R458632	R458632
R44141858[275]	2-7/8 "	R429218X	R429218X[39]	R406532	R4090070[40]	N/A[53]	-	R458636	R458636
23-123572-004[271]	2-7/8 "	R429218X	R429218X[39]	R406532	R4090070[40]	N/A[53]	-	R458632	R458632
R44141858[275]	2-7/8 "	R429218X	R429218X[39]	R406532	R4090070[40]	N/A[53]	-	R458632	R458632
R44141476[268]	2-7/8 "	R429218X	R429218X[39]	R406532	R4090070[40]	N/A[53]	-	R458635	R458635
23-123552-004[266]	2-7/8 "	R429218X	R429218X[39]	R406532	R4090070[40]	N/A[53]	-	N/A	N/A
23-123552-004[266]	2-7/8 "	R429218X	R429218X[39]	R406532	R4090070[40]	N/A[53]	-	R458635	R458635
23-122527-002[272]	2-7/8 "	R429218X	R429218X[39]	R406532	R4090070[40]	N/A[53]	-	R458636	R458636
23-123572-004[271]	2-7/8 "	R429218X	R429218X[39]	R406532	R4090070[40]	N/A[53]	-	R458636	R458636
23-123572-004[271]	2-7/8 "	R429218X	R429218X[39]	R406532	R4090070[40]	N/A[53]	-	N/A	N/A
23-123552-004[266]	2-7/8 "	R429218X	R429218X[39]	R406532	R4090070[40]	N/A[53]	-	R458636	R458636
23-123552-004[266]	2-7/8 "	R429218X	R429218X[39]	R406532	R4090070[40]	N/A[53]	-	R458632	R458632
23-122527-002[272]	3-3/8 "	R42R55099	R42R55098[37]	R4066780	R4090021[201]	N/A[53]	-	R458632	R458632
23-122527-002[272]	3-3/8 "	R42R55099	R42R55098[37]	R4066780	R4090021[201]	N/A[53]	-	R458632	R458632
23-122527-002[272]	3-3/8 "	R42R55099	R42R55098[37]	R4066780	R4090021[201]	N/A[53]	-	R458636	R458636

273 - 5 Stud, U Shape, .780 Dia. Studs

275 - 5 Stud, U Shape, .656 Dia. Studs

MAKE MODEL YEAR AXLE CODE AXLE WEIGHT	AXLE & BRK. TYPE	BRK. MFG.	BRAKE SIZE	FMSI	MERITOR DISC PAD OR BRAKE SHOE	MERITOR GUIDE PIN OR RETURN SPRING KIT	MERITOR CALIPER HWD. KIT OR RETURN SPRING KIT	MERITOR ADJUSTER KIT (LEFT WHEEL)	MERITOR ADJUSTER KIT (RIGHT WHEEL)
ITE(Cont.)									
170, 1700, 1710, 1723, 1724, 1750, 1753, 1754 SERIES CONVENTIONAL CAB, SCHOOL BUS, TILT CAB(Cont.)									
1987									
	Fd	BX		7108 - D184	MD184	R40H5010	R40H5519	NR	NR
	Fd	BX		7108 - D184	MD184	R40H5010	R40H5519	NR	NR
	Fd	BX		7108 - D184	MD184	R40H5010	R40H5519	NR	NR
	Fd	BX		7108 - D184	MD184	R40H5010	R40H5519	NR	NR
	Fd	BX		7108 - D184	MD184	R40H5010	R40H5519	NR	NR
S1723, S1753 School Bus									
RA29, 30, 42, 44	Rd	BX		7142 - D225	MD225	R40H5010	R40H5522	NR	NR
	Rd	BX		7108 - D184	MD184	R40H5010	R40H5519	NR	NR
	Rd	BX		7108 - D184	MD184	R40H5010	R40H5519	NR	NR
	Rd	BX		7142 - D225	MD225	R40H5010	R40H5522	NR	NR
	Rd	BX		7142 - D225	MD225	R40H5010	R40H5522	NR	NR
	Rd	BX		7142 - D225	MD225	R40H5010	R40H5522	NR	NR
	Rd	BX		7108 - D184	MD184	R40H5010	R40H5519	NR	NR
	Rd	BX		7142 - D225	MD225	R40H5010	R40H5522	NR	NR
	Rd	BX		7142 - D225	MD225	R40H5010	R40H5522	NR	NR
	Rd	BX		7142 - D225	MD225	R40H5010	R40H5522	NR	NR
	Rd	BX		7142 - D225	MD225	R40H5010	R40H5522	NR	NR
	Rd	BX		7108 - D184	MD184	R40H5010	R40H5519	NR	NR
	Rd	BX		7142 - D225	MD225	R40H5010	R40H5522	NR	NR
	Rd	BX		7142 - D225	MD225	R40H5010	R40H5522	NR	NR
	Rd	BX		7108 - D184	MD184	R40H5010	R40H5519	NR	NR
	Rd	BX		7108 - D184	MD184	R40H5010	R40H5519	NR	NR
	Rd	BX		7142 - D225	MD225	R40H5010	R40H5522	NR	NR
	Rd	BX		7142 - D225	MD225	R40H5010	R40H5522	NR	NR
	Rd	BX		7142 - D225	MD225	R40H5010	R40H5522	NR	NR
	Rd	BX		7142 - D225	MD225	R40H5010	R40H5522	NR	NR
	Rd	BX		7142 - D225	MD225	R40H5010	R40H5522	NR	NR
	Rd	BX		7142 - D225	MD225	R40H5010	R40H5522	NR	NR
	Rd	BX		7142 - D225	MD225	R40H5010	R40H5522	NR	NR
	Rd	BX		7108 - D184	MD184	R40H5010	R40H5519	NR	NR
	Rd	BX		7108 - D184	MD184	R40H5010	R40H5519	NR	NR
	Rd	BX		7142 - D225	MD225	R40H5010	R40H5522	NR	NR
	Rd	BX		7142 - D225	MD225	R40H5010	R40H5522	NR	NR
	Rd	BX		7108 - D184	MD184	R40H5010	R40H5519	NR	NR
	Rd	BX		7142 - D225	MD225	R40H5010	R40H5522	NR	NR
	Rd	BX		7142 - D225	MD225	R40H5010	R40H5522	NR	NR
	Rd	BX		7142 - D225	MD225	R40H5010	R40H5522	NR	NR
	Rd	BX		7108 - D184	MD184	R40H5010	R40H5519	NR	NR
	Rd	BX		7142 - D225	MD225	R40H5010	R40H5522	NR	NR
	Rd	BX		7108 - D184	MD184	R40H5010	R40H5519	NR	NR
	Rd	BX		7142 - D225	MD225	R40H5010	R40H5522	NR	NR
	Rd	BX		7142 - D225	MD225	R40H5010	R40H5522	NR	NR
	Rd	BX		7142 - D225	MD225	R40H5010	R40H5522	NR	NR
	Rd	BX		7142 - D225	MD225	R40H5010	R40H5522	NR	NR
	Rd	BX		7108 - D184	MD184	R40H5010	R40H5519	NR	NR
	Rd	BX		7142 - D225	MD225	R40H5010	R40H5522	NR	NR
	Rd	BX		7108 - D184	MD184	R40H5010	R40H5519	NR	NR
	Rd	BX		7108 - D184	MD184	R40H5010	R40H5519	NR	NR
	Rd	BX		7142 - D225	MD225	R40H5010	R40H5522	NR	NR
	Rd	BX		7142 - D225	MD225	R40H5010	R40H5522	NR	NR
	Rd	BX		7108 - D184	MD184	R40H5010	R40H5519	NR	NR
	Rd	BX		7142 - D225	MD225	R40H5010	R40H5522	NR	NR
	Rd	BX		7108 - D184	MD184	R40H5010	R40H5519	NR	NR
	Rd	BX		7142 - D225	MD225	R40H5010	R40H5522	NR	NR
	Rd	BX		7142 - D225	MD225	R40H5010	R40H5522	NR	NR
	Rd	BX		7142 - D225	MD225	R40H5010	R40H5522	NR	NR
	Rd	BX		7142 - D225	MD225	R40H5010	R40H5522	NR	NR
	Rd	BX		7108 - D184	MD184	R40H5010	R40H5519	NR	NR
	Rd	BX		7142 - D225	MD225	R40H5010	R40H5522	NR	NR
	Rd	BX		7108 - D184	MD184	R40H5010	R40H5519	NR	NR
	Rd	BX		7108 - D184	MD184	R40H5010	R40H5519	NR	NR
	Rd	BX		7142 - D225	MD225	R40H5010	R40H5522	NR	NR
	Rd	BX		7108 - D184	MD184	R40H5010	R40H5519	NR	NR
	Rd	BX		7142 - D225	MD225	R40H5010	R40H5522	NR	NR

37 - Also available as a New unit

38 - First design, may have external joining tube and uses steel pistons

39 - First design, uses steel pistons.

40 - For chrome plated steel version, use R4090070P

52 - 18" Length

53 - Power Brakes

201 - Steel Piston

266 - 10 Stud, Hat Shaped

267 - 10 Stud, U Shaped

MERITOR DRUM OR ROTOR NO.	CALIPER OR CYLINDER BORE SIZE	MERITOR CALIPER OR WHEEL CYLINDER (LEFT)	MERITOR CALIPER OR WHEEL CYLINDER (RIGHT)	MERITOR CALIPER OR WHEEL CYLINDER REPAIR KIT	MERITOR CALIPER PISTON	MERITOR MASTER CYLINDER	MERITOR MASTER CYLINDER KIT	MERITOR BRAKE HOSE (LEFT)	MERITOR BRAKE HOSE (RIGHT)
									ITE(Cont.)
170, 1700, 1710, 1723, 1724, 1750, 1753, 1754 SERIES CONVENTIONAL CAB, SCHOOL BUS, TILT CAB(Cont.)									
23-122527-002[272]	3-3/8 "	R42R55099	R42R55098[37]	R4066780	R4090021[201]	N/A[53]	-	N/A	N/A
23-122527-002[272]	3-3/8 "	R42R55099	R42R55098[37]	R4066780	R4090021[201]	N/A[53]	-	N/A	N/A
23-122527-002[272]	3-3/8 "	R42R55099	R42R55098[37]	R4066780	R4090021[201]	N/A[53]	-	R458635	R458635
23-122527-002[272]	3-3/8 "	R42R55099	R42R55098[37]	R4066780	R4090021[201]	N/A[53]	-	R458635	R458635
23-122527-002[272]	3-3/8 "	R42R55099	R42R55098[37]	R4066780	R4090021[201]	N/A[53]	-	R458636	R458636
R44141629[269]	2-7/8 "	R429218X	R429218X[39]	R406532	R4090070[40]	-	-	R458634[52]	R458634
R44141608[267]	2-19/32 "	R42R55245	R42R55245[38]	R402235118	R402238231[201]	-	-	R458634[52]	R458634
23-123552-004[266]	2-19/32 "	R42R55245	R42R55245[38]	R402235118	R402238231[201]	-	-	R4577512	R4577512
23-123552-004[266]	2-7/8 "	R429218X	R429218X[39]	R406532	R4090070[40]	-	-	R458634[52]	R458634
R44141627[270]	2-7/8 "	R429218X	R429218X[39]	R406532	R4090070[40]	-	-	R4577512	R4577512
R44141628[269]	2-7/8 "	R429218X	R429218X[39]	R406532	R4090070[40]	-	-	R458634[52]	R458634
23-123552-004[266]	2-19/32 "	R42R55245	R42R55245[38]	R402235118	R402238231[201]	-	-	R458634[52]	R458634
R44141608[267]	2-7/8 "	R429218X	R429218X[39]	R406532	R4090070[40]	-	-	R4577512	R4577512
R44141629[269]	2-7/8 "	R429218X	R429218X[39]	R406532	R4090070[40]	-	-	R4577512	R4577512
R44141628[269]	2-7/8 "	R429218X	R429218X[39]	R406532	R4090070[40]	-	-	R458634[52]	R458634
23-123552-004[266]	2-7/8 "	R429218X	R429218X[39]	R406532	R4090070[40]	-	-	R458634[52]	R458634
R44141629[269]	2-19/32 "	R42R55245	R42R55245[38]	R402235118	R402238231[201]	-	-	R458634[52]	R458634
23-122527-002[272]	2-7/8 "	R429218X	R429218X[39]	R406532	R4090070[40]	-	-	R4577512	R4577512
R44141629[269]	2-7/8 "	R429218X	R429218X[39]	R406532	R4090070[40]	-	-	R458634[52]	R458634
23-122527-002[272]	2-19/32 "	R42R55245	R42R55245[38]	R402235118	R402238231[201]	-	-	R458634[52]	R458634
R44141628[269]	2-19/32 "	R42R55245	R42R55245[38]	R402235118	R402238231[201]	-	-	R4577512	R4577512
23-122527-002[272]	2-7/8 "	R429218X	R429218X[39]	R406532	R4090070[40]	-	-	R4577512	R4577512
R44141628[269]	2-7/8 "	R429218X	R429218X[39]	R406532	R4090070[40]	-	-	R4577512	R4577512
R44141627[270]	2-7/8 "	R429218X	R429218X[39]	R406532	R4090070[40]	-	-	R4577512	R4577512
R44141608[267]	2-7/8 "	R429218X	R429218X[39]	R406532	R4090070[40]	-	-	R4577512	R4577512
23-123572-004[271]	2-7/8 "	R429218X	R429218X[39]	R406532	R4090070[40]	-	-	R458634[52]	R458634
23-123572-004[271]	2-7/8 "	R429218X	R429218X[39]	R406532	R4090070[40]	-	-	R458634[52]	R458634
R44141627[270]	2-7/8 "	R429218X	R429218X[39]	R406532	R4090070[40]	-	-	R458634[52]	R458634
23-123552-004[266]	2-19/32 "	R42R55245	R42R55245[38]	R402235118	R402238231[201]	-	-	R4577512	R4577512
R44141628[269]	2-19/32 "	R42R55245	R42R55245[38]	R402235118	R402238231[201]	-	-	R4577512	R4577512
23-122527-002[272]	2-7/8 "	R429218X	R429218X[39]	R406532	R4090070[40]	-	-	R4577512	R4577512
R44141627[270]	2-7/8 "	R429218X	R429218X[39]	R406532	R4090070[40]	-	-	R458634[52]	R458634
23-123572-004[271]	2-19/32 "	R42R55245	R42R55245[38]	R402235118	R402238231[201]	-	-	R4577512	R4577512
23-123552-004[266]	2-7/8 "	R429218X	R429218X[39]	R406532	R4090070[40]	-	-	R4577512	R4577512
23-122527-002[272]	2-7/8 "	R429218X	R429218X[39]	R406532	R4090070[40]	-	-	R458634[52]	R458634
R44141608[267]	2-7/8 "	R429218X	R429218X[39]	R406532	R4090070[40]	-	-	R4577512	R4577512
R44141628[269]	2-19/32 "	R42R55245	R42R55245[38]	R402235118	R402238231[201]	-	-	R458634[52]	R458634
R44141627[270]	2-7/8 "	R429218X	R429218X[39]	R406532	R4090070[40]	-	-	R458634[52]	R458634
23-123552-004[266]	2-19/32 "	R42R55245	R42R55245[38]	R402235118	R402238231[201]	-	-	R458634[52]	R458634
23-123572-004[271]	2-19/32 "	R42R55245	R42R55245[38]	R402235118	R402238231[201]	-	-	R4577512	R4577512
23-123572-004[271]	2-7/8 "	R429218X	R429218X[39]	R406532	R4090070[40]	-	-	R458634[52]	R458634
R44141608[267]	2-7/8 "	R429218X	R429218X[39]	R406532	R4090070[40]	-	-	R458634[52]	R458634
23-123572-004[271]	2-19/32 "	R42R55245	R42R55245[38]	R402235118	R402238231[201]	-	-	R458634[52]	R458634
R44141608[267]	2-7/8 "	R429218X	R429218X[39]	R406532	R4090070[40]	-	-	R458634[52]	R458634
R44141627[270]	2-19/32 "	R42R55245	R42R55245[38]	R402235118	R402238231[201]	-	-	R4577512	R4577512
R44141608[267]	2-7/8 "	R429218X	R429218X[39]	R406532	R4090070[40]	-	-	R458634[52]	R458634
23-123572-004[271]	2-7/8 "	R429218X	R429218X[39]	R406532	R4090070[40]	-	-	R4577512	R4577512
R44141628[269]	2-19/32 "	R42R55245	R42R55245[38]	R402235118	R402238231[201]	-	-	R458634[52]	R458634
R44141627[270]	2-19/32 "	R42R55245	R42R55245[38]	R402235118	R402238231[201]	-	-	R458634[52]	R458634
23-122527-002[272]	2-7/8 "	R429218X	R429218X[39]	R406532	R4090070[40]	-	-	R458634[52]	R458634
R44141628[269]	2-7/8 "	R429218X	R429218X[39]	R406532	R4090070[40]	-	-	R4577512	R4577512
R44141629[269]	2-7/8 "	R429218X	R429218X[39]	R406532	R4090070[40]	-	-	R4577512	R4577512
23-122527-002[272]	2-7/8 "	R429218X	R429218X[39]	R406532	R4090070[40]	-	-	R458634[52]	R458634
R44141629[269]	2-7/8 "	R429218X	R429218X[39]	R406532	R4090070[40]	-	-	R4577512	R4577512
23-123572-004[271]	2-19/32 "	R42R55245	R42R55245[38]	R402235118	R402238231[201]	-	-	R458634[52]	R458634
R44141627[270]	2-7/8 "	R429218X	R429218X[39]	R406532	R4090070[40]	-	-	R4577512	R4577512
R44141629[269]	2-19/32 "	R42R55245	R42R55245[38]	R402235118	R402238231[201]	-	-	R4577512	R4577512
R44141608[267]	2-19/32 "	R42R55245	R42R55245[38]	R402235118	R402238231[201]	-	-	R458634[52]	R458634
23-123552-004[266]	2-7/8 "	R429218X	R429218X[39]	R406532	R4090070[40]	-	-	R4577512	R4577512
R44141608[267]	2-19/32 "	R42R55245	R42R55245[38]	R402235118	R402238231[201]	-	-	R4577512	R4577512
R44141629[269]	2-7/8 "	R429218X	R429218X[39]	R406532	R4090070[40]	-	-	R458634[52]	R458634
R44141628[269]	2-7/8 "	R429218X	R429218X[39]	R406532	R4090070[40]	-	-	R4577512	R4577512

269 - 5 Stud, U Shape

270 - 5 Stud, U Shape, .766 Dia. Studs

271 - 6 Stud, Hat Shape

272 - 6 Stud, U Shape

MAKE MODEL YEAR AXLE CODE AXLE WEIGHT	AXLE & BRK. TYPE	BRK. MFG.	BRAKE SIZE	FMSI	MERITOR DISC PAD OR BRAKE SHOE	MERITOR GUIDE PIN OR RETURN SPRING KIT	MERITOR CALIPER HWD. KIT OR RETURN SPRING KIT	MERITOR ADJUSTER KIT (LEFT WHEEL)	MERITOR ADJUSTER KIT (RIGHT WHEEL)

ITE(Cont.)

170, 1700, 1710, 1723, 1724, 1750, 1753, 1754 SERIES CONVENTIONAL CAB, SCHOOL BUS, TILT CAB(Cont.)

MAKE MODEL YEAR AXLE CODE AXLE WEIGHT	AXLE & BRK. TYPE	BRK. MFG.	BRAKE SIZE	FMSI	MERITOR DISC PAD OR BRAKE SHOE	MERITOR GUIDE PIN OR RETURN SPRING KIT	MERITOR CALIPER HWD. KIT OR RETURN SPRING KIT	MERITOR ADJUSTER KIT (LEFT WHEEL)	MERITOR ADJUSTER KIT (RIGHT WHEEL)
1987 S1723, S1753 School Bus RA29, 30, 42, 44	Rd	BX		7108 - D184	MD184	R40H5010	R40H5519	NR	NR
	Rd	BX		7142 - D225	MD225	R40H5010	R40H5522	NR	NR
	Rd	BX		7142 - D225	MD225	R40H5010	R40H5522	NR	NR
	Rd	BX		7142 - D225	MD225	R40H5010	R40H5522	NR	NR
	Rd	BX		7108 - D184	MD184	R40H5010	R40H5519	NR	NR
	Rd	BX		7108 - D184	MD184	R40H5010	R40H5519	NR	NR
	Rd	BX		7142 - D225	MD225	R40H5010	R40H5522	NR	NR
	Rd	BX		7142 - D225	MD225	R40H5010	R40H5522	NR	NR
	Rd	BX		7108 - D184	MD184	R40H5010	R40H5519	NR	NR
S1724, S1754 Conventional	Fd	BX		7108 - D184	MD184	R40H5010	R40H5519	NR	NR
	Fd	BX		7108 - D184	MD184	R40H5010	R40H5519	NR	NR
	Fd	BX		7108 - D184	MD184	R40H5010	R40H5519	NR	NR
	Fd	BX		7108 - D184	MD184	R40H5010	R40H5519	NR	NR
	Fd	BX		7108 - D184	MD184	R40H5010	R40H5519	NR	NR
	Fd	BX		7108 - D184	MD184	R40H5010	R40H5519	NR	NR
	Fd	BX		7108 - D184	MD184	R40H5010	R40H5519	NR	NR
	Fd	BX		7108 - D184	MD184	R40H5010	R40H5519	NR	NR
	Fd	BX		7108 - D184	MD184	R40H5010	R40H5519	NR	NR
	Fd	BX		7108 - D184	MD184	R40H5010	R40H5519	NR	NR
S1724, S1754 Conventional FA101	Fd	BX		7108 - D184	MD184	R40H5010	R40H5519	NR	NR
	Fd	BX		7108 - D184	MD184	R40H5010	R40H5519	NR	NR
	Fd	BX		7108 - D184	MD184	R40H5010	R40H5519	NR	NR
	Fd	BX		7108 - D184	MD184	R40H5010	R40H5519	NR	NR
	Fd	BX		7108 - D184	MD184	R40H5010	R40H5519	NR	NR
	Fd	BX		7108 - D184	MD184	R40H5010	R40H5519	NR	NR
S1724, S1754 Conventional FA309, 329, 339	Fd	BX		7142 - D225	MD225	R40H5010	R40H5522	NR	NR
	Fd	BX		7142 - D225	MD225	R40H5010	R40H5522	NR	NR
	Fd	BX		7142 - D225	MD225	R40H5010	R40H5522	NR	NR
	Fd	BX		7142 - D225	MD225	R40H5010	R40H5522	NR	NR
	Fd	BX		7142 - D225	MD225	R40H5010	R40H5522	NR	NR
	Fd	BX		7142 - D225	MD225	R40H5010	R40H5522	NR	NR
	Fd	BX		7142 - D225	MD225	R40H5010	R40H5522	NR	NR
	Fd	BX		7142 - D225	MD225	R40H5010	R40H5522	NR	NR
	Fd	BX		7142 - D225	MD225	R40H5010	R40H5522	NR	NR
	Fd	BX		7142 - D225	MD225	R40H5010	R40H5522	NR	NR
	Fd	BX		7142 - D225	MD225	R40H5010	R40H5522	NR	NR
	Fd	BX		7142 - D225	MD225	R40H5010	R40H5522	NR	NR
	Fd	BX		7142 - D225	MD225	R40H5010	R40H5522	NR	NR
	Fd	BX		7142 - D225	MD225	R40H5010	R40H5522	NR	NR
	Fd	BX		7142 - D225	MD225	R40H5010	R40H5522	NR	NR
	Fd	BX		7142 - D225	MD225	R40H5010	R40H5522	NR	NR
	Fd	BX		7142 - D225	MD225	R40H5010	R40H5522	NR	NR
	Fd	BX		7142 - D225	MD225	R40H5010	R40H5522	NR	NR
	Fd	BX		7142 - D225	MD225	R40H5010	R40H5522	NR	NR
	Fd	BX		7142 - D225	MD225	R40H5010	R40H5522	NR	NR
	Fd	BX		7142 - D225	MD225	R40H5010	R40H5522	NR	NR
	Fd	BX		7142 - D225	MD225	R40H5010	R40H5522	NR	NR
	Fd	BX		7142 - D225	MD225	R40H5010	R40H5522	NR	NR
	Fd	BX		7142 - D225	MD225	R40H5010	R40H5522	NR	NR
	Fd	BX		7142 - D225	MD225	R40H5010	R40H5522	NR	NR
	Fd	BX		7142 - D225	MD225	R40H5010	R40H5522	NR	NR
	Fd	BX		7142 - D225	MD225	R40H5010	R40H5522	NR	NR
	Fd	BX		7142 - D225	MD225	R40H5010	R40H5522	NR	NR
	Fd	BX		7142 - D225	MD225	R40H5010	R40H5522	NR	NR
	Fd	BX		7142 - D225	MD225	R40H5010	R40H5522	NR	NR
	Fd	BX		7142 - D225	MD225	R40H5010	R40H5522	NR	NR
	Fd	BX		7142 - D225	MD225	R40H5010	R40H5522	NR	NR
	Fd	BX		7142 - D225	MD225	R40H5010	R40H5522	NR	NR
	Fd	BX		7142 - D225	MD225	R40H5010	R40H5522	NR	NR
	Fd	BX		7142 - D225	MD225	R40H5010	R40H5522	NR	NR

37 - Also available as a New unit

38 - First design, may have external joining tube and uses steel pistons

39 - First design, uses steel pistons.

40 - For chrome plated steel version, use R4090070P

52 - 18" Length

201 - Steel Piston

266 - 10 Stud, Hat Shaped

267 - 10 Stud, U Shaped

268 - 5 Stud, Hat Shape

MERITOR DRUM OR ROTOR NO.	CALIPER OR CYLINDER BORE SIZE	MERITOR CALIPER OR WHEEL CYLINDER (LEFT)	MERITOR CALIPER OR WHEEL CYLINDER (RIGHT)	MERITOR CALIPER OR WHEEL CYLINDER REPAIR KIT	MERITOR CALIPER PISTON	MERITOR MASTER CYLINDER	MERITOR MASTER CYLINDER KIT	MERITOR BRAKE HOSE (LEFT)	MERITOR BRAKE HOSE (RIGHT)
									ITE(Cont.)
170, 1700, 1710, 1723, 1724, 1750, 1753, 1754 SERIES CONVENTIONAL CAB, SCHOOL BUS, TILT CAB(Cont.)									
R44141608[267]	2-19/32 "	R42R55245	R42R55245[38]	R402235118	R402238231[201]	-	-	R4577512	R4577512
23-123552-004[266]	2-7/8 "	R429218X	R429218X[39]	R406532	R4090070[40]	-	-	R4577512	R4577512
23-123572-004[271]	2-7/8 "	R429218X	R429218X[39]	R406532	R4090070[40]	-	-	R4577512	R4577512
R44141628[269]	2-7/8 "	R429218X	R429218X[39]	R406532	R4090070[40]	-	-	R458634[52]	R458634
R44141629[269]	2-19/32 "	R42R55245	R42R55245[38]	R402235118	R402238231[201]	-	-	R458634[52]	R458634
R44141629[269]	2-19/32 "	R42R55245	R42R55245[38]	R402235118	R402238231[201]	-	-	R4577512	R4577512
23-123572-004[271]	2-7/8 "	R429218X	R429218X[39]	R406532	R4090070[40]	-	-	R4577512	R4577512
23-123552-004[266]	2-7/8 "	R429218X	R429218X[39]	R406532	R4090070[40]	-	-	R458634[52]	R458634
23-122527-002[272]	2-19/32 "	R42R55245	R42R55245[38]	R402235118	R402238231[201]	-	-	R4577512	R4577512
R44141858[275]	3-3/8 "	R42R55099	R42R55098[37]	R4066780	R4090021[201]	-	-	-	-
R44141858[275]	3-3/8 "	R42R55099	R42R55098[37]	R4066780	R4090021[201]	-	-	-	-
23-123552-004[266]	3-3/8 "	R42R55099	R42R55098[37]	R4066780	R4090021[201]	-	-	-	-
23-122920-002[273]	3-3/8 "	R42R55099	R42R55098[37]	R4066780	R4090021[201]	-	-	-	-
23-123572-004[271]	3-3/8 "	R42R55099	R42R55098[37]	R4066780	R4090021[201]	-	-	-	-
23-122920-002[273]	3-3/8 "	R42R55099	R42R55098[37]	R4066780	R4090021[201]	-	-	-	-
R44141476[268]	3-3/8 "	R42R55099	R42R55098[37]	R4066780	R4090021[201]	-	-	-	-
23-123552-004[266]	3-3/8 "	R42R55099	R42R55098[37]	R4066780	R4090021[201]	-	-	-	-
23-123572-004[271]	3-3/8 "	R42R55099	R42R55098[37]	R4066780	R4090021[201]	-	-	-	-
R44141476[268]	3-3/8 "	R42R55099	R42R55098[37]	R4066780	R4090021[201]	-	-	-	-
23-122527-002[272]	2-19/32 "	R42R55245	R42R55245[38]	R402235118	R402238231[201]	-	-	-	-
R44141476[268]	2-19/32 "	R42R55245	R42R55245[38]	R402235118	R402238231[201]	-	-	-	-
23-123552-004[266]	2-19/32 "	R42R55245	R42R55245[38]	R402235118	R402238231[201]	-	-	-	-
23-123572-004[271]	2-19/32 "	R42R55245	R42R55245[38]	R402235118	R402238231[201]	-	-	-	-
23-122920-002[273]	2-19/32 "	R42R55245	R42R55245[38]	R402235118	R402238231[201]	-	-	-	-
R44141858[275]	2-19/32 "	R42R55245	R42R55245[38]	R402235118	R402238231[201]	-	-	-	-
23-123572-004[271]	2-7/8 "	R429218X	R429218X[39]	R406532	R4090070[40]	-	-	-	-
23-122920-002[273]	2-7/8 "	R429218X	R429218X[39]	R406532	R4090070[40]	-	-	-	-
R44141858[275]	2-7/8 "	R429218X	R429218X[39]	R406532	R4090070[40]	-	-	-	-
23-122920-002[273]	2-7/8 "	R429218X	R429218X[39]	R406532	R4090070[40]	-	-	-	-
23-122527-002[272]	2-7/8 "	R429218X	R429218X[39]	R406532	R4090070[40]	-	-	-	-
R44141858[275]	2-7/8 "	R429218X	R429218X[39]	R406532	R4090070[40]	-	-	-	-
23-123572-004[271]	2-7/8 "	R429218X	R429218X[39]	R406532	R4090070[40]	-	-	-	-
R44141476[268]	2-7/8 "	R429218X	R429218X[39]	R406532	R4090070[40]	-	-	-	-
R44141476[268]	2-7/8 "	R429218X	R429218X[39]	R406532	R4090070[40]	-	-	-	-
23-122527-002[272]	2-7/8 "	R429218X	R429218X[39]	R406532	R4090070[40]	-	-	-	-
R44141476[268]	2-7/8 "	R429218X	R429218X[39]	R406532	R4090070[40]	-	-	-	-
23-123552-004[266]	2-7/8 "	R429218X	R429218X[39]	R406532	R4090070[40]	-	-	-	-
23-123552-004[266]	2-7/8 "	R429218X	R429218X[39]	R406532	R4090070[40]	-	-	-	-
R44141476[268]	2-7/8 "	R429218X	R429218X[39]	R406532	R4090070[40]	-	-	-	-
R44141858[275]	2-7/8 "	R429218X	R429218X[39]	R406532	R4090070[40]	-	-	-	-
23-122527-002[272]	2-7/8 "	R429218X	R429218X[39]	R406532	R4090070[40]	-	-	-	-
23-123552-004[266]	2-7/8 "	R429218X	R429218X[39]	R406532	R4090070[40]	-	-	-	-
23-122527-002[272]	2-7/8 "	R429218X	R429218X[39]	R406532	R4090070[40]	-	-	-	-
23-123552-004[266]	2-7/8 "	R429218X	R429218X[39]	R406532	R4090070[40]	-	-	-	-
23-122527-002[272]	2-7/8 "	R429218X	R429218X[39]	R406532	R4090070[40]	-	-	-	-
23-123572-004[271]	2-7/8 "	R429218X	R429218X[39]	R406532	R4090070[40]	-	-	-	-
R44141858[275]	2-7/8 "	R429218X	R429218X[39]	R406532	R4090070[40]	-	-	-	-
23-122527-002[272]	2-7/8 "	R429218X	R429218X[39]	R406532	R4090070[40]	-	-	-	-
23-123552-004[266]	2-7/8 "	R429218X	R429218X[39]	R406532	R4090070[40]	-	-	-	-
R44141858[275]	2-7/8 "	R429218X	R429218X[39]	R406532	R4090070[40]	-	-	-	-
R44141858[275]	2-7/8 "	R429218X	R429218X[39]	R406532	R4090070[40]	-	-	-	-
23-122920-002[273]	2-7/8 "	R429218X	R429218X[39]	R406532	R4090070[40]	-	-	-	-
23-122920-002[273]	2-7/8 "	R429218X	R429218X[39]	R406532	R4090070[40]	-	-	-	-
23-123572-004[271]	2-7/8 "	R429218X	R429218X[39]	R406532	R4090070[40]	-	-	-	-
23-123552-004[266]	2-7/8 "	R429218X	R429218X[39]	R406532	R4090070[40]	-	-	-	-
R44141476[268]	2-7/8 "	R429218X	R429218X[39]	R406532	R4090070[40]	-	-	-	-
23-123572-004[271]	2-7/8 "	R429218X	R429218X[39]	R406532	R4090070[40]	-	-	-	-
R44141476[268]	2-7/8 "	R429218X	R429218X[39]	R406532	R4090070[40]	-	-	-	-
23-123572-004[271]	2-7/8 "	R429218X	R429218X[39]	R406532	R4090070[40]	-	-	-	-
23-122920-002[273]	2-7/8 "	R429218X	R429218X[39]	R406532	R4090070[40]	-	-	-	-

269 - 5 Stud, U Shape

271 - 6 Stud, Hat Shape

272 - 6 Stud, U Shape

273 - 5 Stud, U Shape, .780 Dia. Studs

275 - 5 Stud, U Shape, .656 Dia. Studs

MAKE MODEL YEAR AXLE CODE AXLE WEIGHT	AXLE & BRK. TYPE	BRK. MFG.	BRAKE SIZE	FMSI	MERITOR DISC PAD OR BRAKE SHOE	MERITOR GUIDE PIN OR RETURN SPRING KIT	MERITOR CALIPER HWD. KIT OR RETURN SPRING KIT	MERITOR ADJUSTER KIT (LEFT WHEEL)	MERITOR ADJUSTER KIT (RIGHT WHEEL)
ITE(Cont.)									
170, 1700, 1710, 1723, 1724, 1750, 1753, 1754 SERIES CONVENTIONAL CAB, SCHOOL BUS, TILT CAB(Cont.)									
1987									
S1724, S1754 Conventional									
FA73	Fd	BX		7108 - D184	MD184	R40H5010	R40H5519	NR	NR
	Fd	BX		7108 - D184	MD184	R40H5010	R40H5519	NR	NR
S1724, S1754 Conventional									
RA29, 30, 42, 44	Rd	BX		7142 - D225	MD225	R40H5010	R40H5522	NR	NR
	Rd	BX		7108 - D184	MD184	R40H5010	R40H5519	NR	NR
	Rd	BX		7142 - D225	MD225	R40H5010	R40H5522	NR	NR
	Rd	BX		7142 - D225	MD225	R40H5010	R40H5522	NR	NR
	Rd	BX		7108 - D184	MD184	R40H5010	R40H5519	NR	NR
	Rd	BX		7142 - D225	MD225	R40H5010	R40H5522	NR	NR
	Rd	BX		7142 - D225	MD225	R40H5010	R40H5522	NR	NR
	Rd	BX		7108 - D184	MD184	R40H5010	R40H5519	NR	NR
	Rd	BX		7142 - D225	MD225	R40H5010	R40H5522	NR	NR
	Rd	BX		7108 - D184	MD184	R40H5010	R40H5519	NR	NR
	Rd	BX		7108 - D184	MD184	R40H5010	R40H5519	NR	NR
	Rd	BX		7142 - D225	MD225	R40H5010	R40H5522	NR	NR
	Rd	BX		7142 - D225	MD225	R40H5010	R40H5522	NR	NR
	Rd	BX		7142 - D225	MD225	R40H5010	R40H5522	NR	NR
	Rd	BX		7142 - D225	MD225	R40H5010	R40H5522	NR	NR
	Rd	BX		7142 - D225	MD225	R40H5010	R40H5522	NR	NR
	Rd	BX		7142 - D225	MD225	R40H5010	R40H5522	NR	NR
	Rd	BX		7142 - D225	MD225	R40H5010	R40H5522	NR	NR
	Rd	BX		7108 - D184	MD184	R40H5010	R40H5519	NR	NR
	Rd	BX		7108 - D184	MD184	R40H5010	R40H5519	NR	NR
	Rd	BX		7142 - D225	MD225	R40H5010	R40H5522	NR	NR
	Rd	BX		7108 - D184	MD184	R40H5010	R40H5519	NR	NR
	Rd	BX		7142 - D225	MD225	R40H5010	R40H5522	NR	NR
	Rd	BX		7142 - D225	MD225	R40H5010	R40H5522	NR	NR
	Rd	BX		7142 - D225	MD225	R40H5010	R40H5522	NR	NR
	Rd	BX		7108 - D184	MD184	R40H5010	R40H5519	NR	NR
	Rd	BX		7142 - D225	MD225	R40H5010	R40H5522	NR	NR
	Rd	BX		7142 - D225	MD225	R40H5010	R40H5522	NR	NR
	Rd	BX		7108 - D184	MD184	R40H5010	R40H5519	NR	NR
	Rd	BX		7108 - D184	MD184	R40H5010	R40H5519	NR	NR
	Rd	BX		7108 - D184	MD184	R40H5010	R40H5519	NR	NR
	Rd	BX		7142 - D225	MD225	R40H5010	R40H5522	NR	NR
	Rd	BX		7142 - D225	MD225	R40H5010	R40H5522	NR	NR
	Rd	BX		7108 - D184	MD184	R40H5010	R40H5519	NR	NR
1986									
C1710, C1750 Cargostar Tilt Cab									
FA101	Fd	BX		7108 - D184	MD184	R40H5010	R40H5519	NR	NR
	Fd	BX		7108 - D184	MD184	R40H5010	R40H5519	NR	NR
	Fd	BX		7108 - D184	MD184	R40H5010	R40H5519	NR	NR
	Fd	BX		7108 - D184	MD184	R40H5010	R40H5519	NR	NR
	Fd	BX		7108 - D184	MD184	R40H5010	R40H5519	NR	NR
	Fd	BX		7108 - D184	MD184	R40H5010	R40H5519	NR	NR
C1710, C1750 Cargostar Tilt Cab									
FA309, 329, 339	Fd	BX		7142 - D225	MD225	R40H5010	R40H5522	NR	NR
	Fd	BX		7142 - D225	MD225	R40H5010	R40H5522	NR	NR
	Fd	BX		7142 - D225	MD225	R40H5010	R40H5522	NR	NR
	Fd	BX		7142 - D225	MD225	R40H5010	R40H5522	NR	NR
	Fd	BX		7142 - D225	MD225	R40H5010	R40H5522	NR	NR
	Fd	BX		7142 - D225	MD225	R40H5010	R40H5522	NR	NR
	Fd	BX		7142 - D225	MD225	R40H5010	R40H5522	NR	NR
	Fd	BX		7142 - D225	MD225	R40H5010	R40H5522	NR	NR
	Fd	BX		7142 - D225	MD225	R40H5010	R40H5522	NR	NR
	Fd	BX		7142 - D225	MD225	R40H5010	R40H5522	NR	NR
	Fd	BX		7142 - D225	MD225	R40H5010	R40H5522	NR	NR
	Fd	BX		7142 - D225	MD225	R40H5010	R40H5522	NR	NR
	Fd	BX		7142 - D225	MD225	R40H5010	R40H5522	NR	NR
	Fd	BX		7142 - D225	MD225	R40H5010	R40H5522	NR	NR

37 - Also available as a New unit

38 - First design, may have external joining tube and uses steel pistons

39 - First design, uses steel pistons.

40 - For chrome plated steel version, use R4090070P

53 - Power Brakes

201 - Steel Piston

266 - 10 Stud, Hat Shaped

267 - 10 Stud, U Shaped

268 - 5 Stud, Hat Shape

MERITOR DRUM OR ROTOR NO.	CALIPER OR CYLINDER BORE SIZE	MERITOR CALIPER OR WHEEL CYLINDER (LEFT)	MERITOR CALIPER OR WHEEL CYLINDER (RIGHT)	MERITOR CALIPER OR WHEEL CYLINDER REPAIR KIT	MERITOR CALIPER PISTON	MERITOR MASTER CYLINDER	MERITOR MASTER CYLINDER KIT	MERITOR BRAKE HOSE (LEFT)	MERITOR BRAKE HOSE (RIGHT)
									ITE(Cont.)
170, 1700, 1710, 1723, 1724, 1750, 1753, 1754 SERIES CONVENTIONAL CAB, SCHOOL BUS, TILT CAB(Cont.)									
23-122527-002[272]	3-3/8 "	R42R55099	R42R55098[37]	R4066780	R4090021[201]	-	-	-	-
23-122527-002[272]	3-3/8 "	R42R55099	R42R55098[37]	R4066780	R4090021[201]	-	-	-	-
R44141628[269]	2-7/8 "	R429218X	R429218X[39]	R406532	R4090070[40]	-	-	-	-
R44141629[269]	2-19/32 "	R42R55245	R42R55245[38]	R402235118	R402238231[201]	-	-	-	-
R44141628[269]	2-7/8 "	R429218X	R429218X[39]	R406532	R4090070[40]	-	-	-	-
R44141628[269]	2-7/8 "	R429218X	R429218X[39]	R406532	R4090070[40]	-	-	-	-
R44141629[269]	2-19/32 "	R42R55245	R42R55245[38]	R402235118	R402238231[201]	-	-	-	-
R44141627[270]	2-7/8 "	R429218X	R429218X[39]	R406532	R4090070[40]	-	-	-	-
R44141629[269]	2-7/8 "	R429218X	R429218X[39]	R406532	R4090070[40]	-	-	-	-
23-122527-002[272]	2-19/32 "	R42R55245	R42R55245[38]	R402235118	R402238231[201]	-	-	-	-
R44141627[270]	2-7/8 "	R429218X	R429218X[39]	R406532	R4090070[40]	-	-	-	-
23-123552-004[266]	2-19/32 "	R42R55245	R42R55245[38]	R402235118	R402238231[201]	-	-	-	-
23-123552-004[266]	2-19/32 "	R42R55245	R42R55245[38]	R402235118	R402238231[201]	-	-	-	-
R44141627[270]	2-7/8 "	R429218X	R429218X[39]	R406532	R4090070[40]	-	-	-	-
23-123572-004[271]	2-7/8 "	R429218X	R429218X[39]	R406532	R4090070[40]	-	-	-	-
23-123552-004[266]	2-7/8 "	R429218X	R429218X[39]	R406532	R4090070[40]	-	-	-	-
23-123572-004[271]	2-7/8 "	R429218X	R429218X[39]	R406532	R4090070[40]	-	-	-	-
23-123572-004[271]	2-7/8 "	R429218X	R429218X[39]	R406532	R4090070[40]	-	-	-	-
R44141629[269]	2-7/8 "	R429218X	R429218X[39]	R406532	R4090070[40]	-	-	-	-
R44141608[267]	2-7/8 "	R429218X	R429218X[39]	R406532	R4090070[40]	-	-	-	-
23-123572-004[271]	2-19/32 "	R42R55245	R42R55245[38]	R402235118	R402238231[201]	-	-	-	-
23-123572-004[271]	2-19/32 "	R42R55245	R42R55245[38]	R402235118	R402238231[201]	-	-	-	-
23-122527-002[272]	2-7/8 "	R429218X	R429218X[39]	R406532	R4090070[40]	-	-	-	-
R44141628[269]	2-19/32 "	R42R55245	R42R55245[38]	R402235118	R402238231[201]	-	-	-	-
R44141608[267]	2-7/8 "	R429218X	R429218X[39]	R406532	R4090070[40]	-	-	-	-
23-122527-002[272]	2-7/8 "	R429218X	R429218X[39]	R406532	R4090070[40]	-	-	-	-
R44141629[269]	2-7/8 "	R429218X	R429218X[39]	R406532	R4090070[40]	-	-	-	-
23-122527-002[272]	2-19/32 "	R42R55245	R42R55245[38]	R402235118	R402238231[201]	-	-	-	-
R44141608[267]	2-7/8 "	R429218X	R429218X[39]	R406532	R4090070[40]	-	-	-	-
23-122527-002[272]	2-7/8 "	R429218X	R429218X[39]	R406532	R4090070[40]	-	-	-	-
R44141627[270]	2-19/32 "	R42R55245	R42R55245[38]	R402235118	R402238231[201]	-	-	-	-
R44141628[269]	2-19/32 "	R42R55245	R42R55245[38]	R402235118	R402238231[201]	-	-	-	-
R44141608[267]	2-19/32 "	R42R55245	R42R55245[38]	R402235118	R402238231[201]	-	-	-	-
23-123552-004[266]	2-7/8 "	R429218X	R429218X[39]	R406532	R4090070[40]	-	-	-	-
23-123552-004[266]	2-7/8 "	R429218X	R429218X[39]	R406532	R4090070[40]	-	-	-	-
R44141608[267]	2-19/32 "	R42R55245	R42R55245[38]	R402235118	R402238231[201]	-	-	-	-
R44141858[275]	2-19/32 "	R42R55245	R42R55245[38]	R402235118	R402238231[201]	N/A[53]	-	-	-
R44141476[268]	2-19/32 "	R42R55245	R42R55245[38]	R402235118	R402238231[201]	N/A[53]	-	-	-
23-123572-004[271]	2-19/32 "	R42R55245	R42R55245[38]	R402235118	R402238231[201]	N/A[53]	-	-	-
23-123552-004[266]	2-19/32 "	R42R55245	R42R55245[38]	R402235118	R402238231[201]	N/A[53]	-	-	-
23-122527-002[272]	2-19/32 "	R42R55245	R42R55245[38]	R402235118	R402238231[201]	N/A[53]	-	-	-
23-122920-002[273]	2-19/32 "	R42R55245	R42R55245[38]	R402235118	R402238231[201]	N/A[53]	-	-	-
23-123552-004[266]	2-7/8 "	R429218X	R429218X[39]	R406532	R4090070[40]	N/A[53]	-	-	-
R44141476[268]	2-7/8 "	R429218X	R429218X[39]	R406532	R4090070[40]	N/A[53]	-	-	-
23-123552-004[266]	2-7/8 "	R429218X	R429218X[39]	R406532	R4090070[40]	N/A[53]	-	-	-
23-122527-002[272]	2-7/8 "	R429218X	R429218X[39]	R406532	R4090070[40]	N/A[53]	-	-	-
23-123552-004[266]	2-7/8 "	R429218X	R429218X[39]	R406532	R4090070[40]	N/A[53]	-	-	-
R44141858[275]	2-7/8 "	R429218X	R429218X[39]	R406532	R4090070[40]	N/A[53]	-	-	-
23-123552-004[266]	2-7/8 "	R429218X	R429218X[39]	R406532	R4090070[40]	N/A[53]	-	-	-
R44141476[268]	2-7/8 "	R429218X	R429218X[39]	R406532	R4090070[40]	N/A[53]	-	-	-
23-122527-002[272]	2-7/8 "	R429218X	R429218X[39]	R406532	R4090070[40]	N/A[53]	-	-	-
23-122527-002[272]	2-7/8 "	R429218X	R429218X[39]	R406532	R4090070[40]	N/A[53]	-	-	-
23-123552-004[266]	2-7/8 "	R429218X	R429218X[39]	R406532	R4090070[40]	N/A[53]	-	-	-
23-122527-002[272]	2-7/8 "	R429218X	R429218X[39]	R406532	R4090070[40]	N/A[53]	-	-	-
23-122527-002[272]	2-7/8 "	R429218X	R429218X[39]	R406532	R4090070[40]	N/A[53]	-	-	-
23-123572-004[271]	2-7/8 "	R429218X	R429218X[39]	R406532	R4090070[40]	N/A[53]	-	-	-

269 - 5 Stud, U Shape

270 - 5 Stud, U Shape, .766 Dia. Studs

271 - 6 Stud, Hat Shape

272 - 6 Stud, U Shape

273 - 5 Stud, U Shape, .780 Dia. Studs

275 - 5 Stud, U Shape, .656 Dia. Studs

MAKE MODEL YEAR AXLE CODE AXLE WEIGHT	AXLE & BRK. TYPE	BRK. MFG.	BRAKE SIZE	FMSI	MERITOR DISC PAD OR BRAKE SHOE	MERITOR GUIDE PIN OR RETURN SPRING KIT	MERITOR CALIPER HWD. KIT OR RETURN SPRING KIT	MERITOR ADJUSTER KIT (LEFT WHEEL)	MERITOR ADJUSTER KIT (RIGHT WHEEL)
ITE(Cont.)									
170, 1700, 1710, 1723, 1724, 1750, 1753, 1754 SERIES CONVENTIONAL CAB, SCHOOL BUS, TILT CAB(Cont.)									
1986									
	Fd	BX		7142 - D225	MD225	R40H5010	R40H5522	NR	NR
	Fd	BX		7142 - D225	MD225	R40H5010	R40H5522	NR	NR
	Fd	BX		7142 - D225	MD225	R40H5010	R40H5522	NR	NR
	Fd	BX		7142 - D225	MD225	R40H5010	R40H5522	NR	NR
	Fd	BX		7142 - D225	MD225	R40H5010	R40H5522	NR	NR
	Fd	BX		7142 - D225	MD225	R40H5010	R40H5522	NR	NR
	Fd	BX		7142 - D225	MD225	R40H5010	R40H5522	NR	NR
	Fd	BX		7142 - D225	MD225	R40H5010	R40H5522	NR	NR
	Fd	BX		7142 - D225	MD225	R40H5010	R40H5522	NR	NR
	Fd	BX		7142 - D225	MD225	R40H5010	R40H5522	NR	NR
	Fd	BX		7142 - D225	MD225	R40H5010	R40H5522	NR	NR
	Fd	BX		7142 - D225	MD225	R40H5010	R40H5522	NR	NR
	Fd	BX		7142 - D225	MD225	R40H5010	R40H5522	NR	NR
	Fd	BX		7142 - D225	MD225	R40H5010	R40H5522	NR	NR
	Fd	BX		7142 - D225	MD225	R40H5010	R40H5522	NR	NR
	Fd	BX		7142 - D225	MD225	R40H5010	R40H5522	NR	NR
	Fd	BX		7142 - D225	MD225	R40H5010	R40H5522	NR	NR
	Fd	BX		7142 - D225	MD225	R40H5010	R40H5522	NR	NR
	Fd	BX		7142 - D225	MD225	R40H5010	R40H5522	NR	NR
	Fd	BX		7142 - D225	MD225	R40H5010	R40H5522	NR	NR
	Fd	BX		7142 - D225	MD225	R40H5010	R40H5522	NR	NR
C1710, C1750 Cargostar Tilt Cab									
RA29, 30, 42, 44	Rd	BX		7142 - D225	MD225	R40H5010	R40H5522	NR	NR
	Rd	BX		7142 - D225	MD225	R40H5010	R40H5522	NR	NR
	Rd	BX		7108 - D184	MD184	R40H5010	R40H5519	NR	NR
	Rd	BX		7108 - D184	MD184	R40H5010	R40H5519	NR	NR
	Rd	BX		7142 - D225	MD225	R40H5010	R40H5522	NR	NR
	Rd	BX		7108 - D184	MD184	R40H5010	R40H5519	NR	NR
	Rd	BX		7142 - D225	MD225	R40H5010	R40H5522	NR	NR
	Rd	BX		7108 - D184	MD184	R40H5010	R40H5519	NR	NR
	Rd	BX		7142 - D225	MD225	R40H5010	R40H5522	NR	NR
	Rd	BX		7108 - D184	MD184	R40H5010	R40H5519	NR	NR
	Rd	BX		7142 - D225	MD225	R40H5010	R40H5522	NR	NR
	Rd	BX		7142 - D225	MD225	R40H5010	R40H5522	NR	NR
	Rd	BX		7142 - D225	MD225	R40H5010	R40H5522	NR	NR
	Rd	BX		7142 - D225	MD225	R40H5010	R40H5522	NR	NR
	Rd	BX		7142 - D225	MD225	R40H5010	R40H5522	NR	NR
	Rd	BX		7142 - D225	MD225	R40H5010	R40H5522	NR	NR
	Rd	BX		7108 - D184	MD184	R40H5010	R40H5519	NR	NR
	Rd	BX		7142 - D225	MD225	R40H5010	R40H5522	NR	NR
	Rd	BX		7108 - D184	MD184	R40H5010	R40H5519	NR	NR
	Rd	BX		7108 - D184	MD184	R40H5010	R40H5519	NR	NR
	Rd	BX		7142 - D225	MD225	R40H5010	R40H5522	NR	NR
	Rd	BX		7142 - D225	MD225	R40H5010	R40H5522	NR	NR
	Rd	BX		7108 - D184	MD184	R40H5010	R40H5519	NR	NR
	Rd	BX		7142 - D225	MD225	R40H5010	R40H5522	NR	NR
	Rd	BX		7108 - D184	MD184	R40H5010	R40H5519	NR	NR
	Rd	BX		7142 - D225	MD225	R40H5010	R40H5522	NR	NR
	Rd	BX		7108 - D184	MD184	R40H5010	R40H5519	NR	NR
	Rd	BX		7142 - D225	MD225	R40H5010	R40H5522	NR	NR
	Rd	BX		7142 - D225	MD225	R40H5010	R40H5522	NR	NR
	Rd	BX		7108 - D184	MD184	R40H5010	R40H5519	NR	NR
	Rd	BX		7142 - D225	MD225	R40H5010	R40H5522	NR	NR
	Rd	BX		7142 - D225	MD225	R40H5010	R40H5522	NR	NR
	Rd	BX		7142 - D225	MD225	R40H5010	R40H5522	NR	NR
S1723, S1753 School Bus	Fd	BX		7108 - D184	MD184	R40H5010	R40H5519	NR	NR
	Fd	BX		7108 - D184	MD184	R40H5010	R40H5519	NR	NR
	Fd	BX		7108 - D184	MD184	R40H5010	R40H5519	NR	NR
	Fd	BX		7108 - D184	MD184	R40H5010	R40H5519	NR	NR
	Fd	BX		7108 - D184	MD184	R40H5010	R40H5519	NR	NR
	Fd	BX		7108 - D184	MD184	R40H5010	R40H5519	NR	NR
	Fd	BX		7108 - D184	MD184	R40H5010	R40H5519	NR	NR

37 - Also available as a New unit

38 - First design, may have external joining tube and uses steel pistons

39 - First design, uses steel pistons.

40 - For chrome plated steel version, use R4090070P

53 - Power Brakes

201 - Steel Piston

266 - 10 Stud, Hat Shaped

267 - 10 Stud, U Shaped

268 - 5 Stud, Hat Shape

MERITOR DRUM OR ROTOR NO.	CALIPER OR CYLINDER BORE SIZE	MERITOR CALIPER OR WHEEL CYLINDER (LEFT)	MERITOR CALIPER OR WHEEL CYLINDER (RIGHT)	MERITOR CALIPER OR WHEEL CYLINDER REPAIR KIT	MERITOR CALIPER PISTON	MERITOR MASTER CYLINDER	MERITOR MASTER CYLINDER KIT	MERITOR BRAKE HOSE (LEFT)	MERITOR BRAKE HOSE (RIGHT)
									ITE(Cont.)
170, 1700, 1710, 1723, 1724, 1750, 1753, 1754 SERIES CONVENTIONAL CAB, SCHOOL BUS, TILT CAB(Cont.)									
23-122920-002[273]	2-7/8 "	R429218X	R429218X[39]	R406532	R4090070[40]	N/A[53]	-	-	-
R44141858[275]	2-7/8 "	R429218X	R429218X[39]	R406532	R4090070[40]	N/A[53]	-	-	-
R44141476[268]	2-7/8 "	R429218X	R429218X[39]	R406532	R4090070[40]	N/A[53]	-	-	-
23-123572-004[271]	2-7/8 "	R429218X	R429218X[39]	R406532	R4090070[40]	N/A[53]	-	-	-
R44141858[275]	2-7/8 "	R429218X	R429218X[39]	R406532	R4090070[40]	N/A[53]	-	-	-
R44141476[268]	2-7/8 "	R429218X	R429218X[39]	R406532	R4090070[40]	N/A[53]	-	-	-
23-123552-004[266]	2-7/8 "	R429218X	R429218X[39]	R406532	R4090070[40]	N/A[53]	-	-	-
23-123572-004[271]	2-7/8 "	R429218X	R429218X[39]	R406532	R4090070[40]	N/A[53]	-	-	-
23-122527-002[272]	2-7/8 "	R429218X	R429218X[39]	R406532	R4090070[40]	N/A[53]	-	-	-
23-123572-004[271]	2-7/8 "	R429218X	R429218X[39]	R406532	R4090070[40]	N/A[53]	-	-	-
R44141858[275]	2-7/8 "	R429218X	R429218X[39]	R406532	R4090070[40]	N/A[53]	-	-	-
23-123572-004[271]	2-7/8 "	R429218X	R429218X[39]	R406532	R4090070[40]	N/A[53]	-	-	-
23-122920-002[273]	2-7/8 "	R429218X	R429218X[39]	R406532	R4090070[40]	N/A[53]	-	-	-
R44141476[268]	2-7/8 "	R429218X	R429218X[39]	R406532	R4090070[40]	N/A[53]	-	-	-
R44141858[275]	2-7/8 "	R429218X	R429218X[39]	R406532	R4090070[40]	N/A[53]	-	-	-
23-123572-004[271]	2-7/8 "	R429218X	R429218X[39]	R406532	R4090070[40]	N/A[53]	-	-	-
R44141476[268]	2-7/8 "	R429218X	R429218X[39]	R406532	R4090070[40]	N/A[53]	-	-	-
23-122920-002[273]	2-7/8 "	R429218X	R429218X[39]	R406532	R4090070[40]	N/A[53]	-	-	-
23-122920-002[273]	2-7/8 "	R429218X	R429218X[39]	R406532	R4090070[40]	N/A[53]	-	-	-
R44141858[275]	2-7/8 "	R429218X	R429218X[39]	R406532	R4090070[40]	N/A[53]	-	-	-
23-122920-002[273]	2-7/8 "	R429218X	R429218X[39]	R406532	R4090070[40]	N/A[53]	-	-	-
23-123552-004[266]	2-7/8 "	R429218X	R429218X[39]	R406532	R4090070[40]	-	-	-	-
23-123552-004[266]	2-7/8 "	R429218X	R429218X[39]	R406532	R4090070[40]	-	-	-	-
23-123572-004[271]	2-19/32 "	R42R55245	R42R55245[38]	R402235118	R402238231[201]	-	-	-	-
R44141628[269]	2-19/32 "	R42R55245	R42R55245[38]	R402235118	R402238231[201]	-	-	-	-
R44141608[267]	2-7/8 "	R429218X	R429218X[39]	R406532	R4090070[40]	-	-	-	-
R44141608[267]	2-19/32 "	R42R55245	R42R55245[38]	R402235118	R402238231[201]	-	-	-	-
23-123572-004[271]	2-7/8 "	R429218X	R429218X[39]	R406532	R4090070[40]	-	-	-	-
R44141608[267]	2-19/32 "	R42R55245	R42R55245[38]	R402235118	R402238231[201]	-	-	-	-
R44141628[269]	2-7/8 "	R429218X	R429218X[39]	R406532	R4090070[40]	-	-	-	-
R44141628[269]	2-19/32 "	R42R55245	R42R55245[38]	R402235118	R402238231[201]	-	-	-	-
R44141608[267]	2-7/8 "	R429218X	R429218X[39]	R406532	R4090070[40]	-	-	-	-
23-123552-004[266]	2-7/8 "	R429218X	R429218X[39]	R406532	R4090070[40]	-	-	-	-
R44141629[269]	2-7/8 "	R429218X	R429218X[39]	R406532	R4090070[40]	-	-	-	-
23-122527-002[272]	2-7/8 "	R429218X	R429218X[39]	R406532	R4090070[40]	-	-	-	-
R44141627[270]	2-7/8 "	R429218X	R429218X[39]	R406532	R4090070[40]	-	-	-	-
23-122527-002[272]	2-7/8 "	R429218X	R429218X[39]	R406532	R4090070[40]	-	-	-	-
23-123572-004[271]	2-19/32 "	R42R55245	R42R55245[38]	R402235118	R402238231[201]	-	-	-	-
R44141627[270]	2-7/8 "	R429218X	R429218X[39]	R406532	R4090070[40]	-	-	-	-
23-123552-004[266]	2-19/32 "	R42R55245	R42R55245[38]	R402235118	R402238231[201]	-	-	-	-
23-123552-004[266]	2-19/32 "	R42R55245	R42R55245[38]	R402235118	R402238231[201]	-	-	-	-
23-123572-004[271]	2-7/8 "	R429218X	R429218X[39]	R406532	R4090070[40]	-	-	-	-
R44141628[269]	2-7/8 "	R429218X	R429218X[39]	R406532	R4090070[40]	-	-	-	-
R44141629[269]	2-19/32 "	R42R55245	R42R55245[38]	R402235118	R402238231[201]	-	-	-	-
23-123572-004[271]	2-7/8 "	R429218X	R429218X[39]	R406532	R4090070[40]	-	-	-	-
23-122527-002[272]	2-19/32 "	R42R55245	R42R55245[38]	R402235118	R402238231[201]	-	-	-	-
R44141629[269]	2-7/8 "	R429218X	R429218X[39]	R406532	R4090070[40]	-	-	-	-
R44141627[270]	2-19/32 "	R42R55245	R42R55245[38]	R402235118	R402238231[201]	-	-	-	-
R44141629[269]	2-7/8 "	R429218X	R429218X[39]	R406532	R4090070[40]	-	-	-	-
R44141608[267]	2-7/8 "	R429218X	R429218X[39]	R406532	R4090070[40]	-	-	-	-
R44141629[269]	2-19/32 "	R42R55245	R42R55245[38]	R402235118	R402238231[201]	-	-	-	-
23-122527-002[272]	2-7/8 "	R429218X	R429218X[39]	R406532	R4090070[40]	-	-	-	-
R44141627[270]	2-7/8 "	R429218X	R429218X[39]	R406532	R4090070[40]	-	-	-	-
R44141628[269]	2-7/8 "	R429218X	R429218X[39]	R406532	R4090070[40]	-	-	-	-
23-123552-004[266]	3-3/8 "	R42R55099	R42R55098[37]	R4066780	R4090021[201]	N/A[53]	-	R458635	R458635
23-123572-004[271]	3-3/8 "	R42R55099	R42R55098[37]	R4066780	R4090021[201]	N/A[53]	-	N/A	N/A
23-123552-004[266]	3-3/8 "	R42R55099	R42R55098[37]	R4066780	R4090021[201]	N/A[53]	-	R458635	R458635
R44141858[275]	3-3/8 "	R42R55099	R42R55098[37]	R4066780	R4090021[201]	N/A[53]	-	R458632	R458632
R44141476[268]	3-3/8 "	R42R55099	R42R55098[37]	R4066780	R4090021[201]	N/A[53]	-	R458636	R458636
R44141858[275]	3-3/8 "	R42R55099	R42R55098[37]	R4066780	R4090021[201]	N/A[53]	-	N/A	N/A
23-123572-004[271]	3-3/8 "	R42R55099	R42R55098[37]	R4066780	R4090021[201]	N/A[53]	-	R458632	R458632

269 - 5 Stud, U Shape

270 - 5 Stud, U Shape, .766 Dia. Studs

271 - 6 Stud, Hat Shape

272 - 6 Stud, U Shape

273 - 5 Stud, U Shape, .780 Dia. Studs

275 - 5 Stud, U Shape, .656 Dia. Studs

MAKE MODEL YEAR AXLE CODE AXLE WEIGHT	AXLE & BRK. TYPE	BRK. MFG.	BRAKE SIZE	FMSI	MERITOR DISC PAD OR BRAKE SHOE	MERITOR GUIDE PIN OR RETURN SPRING KIT	MERITOR CALIPER HWD. KIT OR RETURN SPRING KIT	MERITOR ADJUSTER KIT (LEFT WHEEL)	MERITOR ADJUSTER KIT (RIGHT WHEEL)
ITE(Cont.)									
170, 1700, 1710, 1723, 1724, 1750, 1753, 1754 SERIES CONVENTIONAL CAB, SCHOOL BUS, TILT CAB(Cont.)									
1986									
	Fd	BX		7108 - D184	MD184	R40H5010	R40H5519	NR	NR
	Fd	BX		7108 - D184	MD184	R40H5010	R40H5519	NR	NR
	Fd	BX		7108 - D184	MD184	R40H5010	R40H5519	NR	NR
	Fd	BX		7108 - D184	MD184	R40H5010	R40H5519	NR	NR
	Fd	BX		7108 - D184	MD184	R40H5010	R40H5519	NR	NR
	Fd	BX		7108 - D184	MD184	R40H5010	R40H5519	NR	NR
	Fd	BX		7108 - D184	MD184	R40H5010	R40H5519	NR	NR
	Fd	BX		7108 - D184	MD184	R40H5010	R40H5519	NR	NR
	Fd	BX		7108 - D184	MD184	R40H5010	R40H5519	NR	NR
	Fd	BX		7108 - D184	MD184	R40H5010	R40H5519	NR	NR
	Fd	BX		7108 - D184	MD184	R40H5010	R40H5519	NR	NR
	Fd	BX		7108 - D184	MD184	R40H5010	R40H5519	NR	NR
	Fd	BX		7108 - D184	MD184	R40H5010	R40H5519	NR	NR
	Fd	BX		7108 - D184	MD184	R40H5010	R40H5519	NR	NR
	Fd	BX		7108 - D184	MD184	R40H5010	R40H5519	NR	NR
	Fd	BX		7108 - D184	MD184	R40H5010	R40H5519	NR	NR
	Fd	BX		7108 - D184	MD184	R40H5010	R40H5519	NR	NR
	Fd	BX		7108 - D184	MD184	R40H5010	R40H5519	NR	NR
	Fd	BX		7108 - D184	MD184	R40H5010	R40H5519	NR	NR
	Fd	BX		7108 - D184	MD184	R40H5010	R40H5519	NR	NR
	Fd	BX		7108 - D184	MD184	R40H5010	R40H5519	NR	NR
	Fd	BX		7108 - D184	MD184	R40H5010	R40H5519	NR	NR
	Fd	BX		7108 - D184	MD184	R40H5010	R40H5519	NR	NR
	Fd	BX		7108 - D184	MD184	R40H5010	R40H5519	NR	NR
	Fd	BX		7108 - D184	MD184	R40H5010	R40H5519	NR	NR
	Fd	BX		7108 - D184	MD184	R40H5010	R40H5519	NR	NR
	Fd	BX		7108 - D184	MD184	R40H5010	R40H5519	NR	NR
	Fd	BX		7108 - D184	MD184	R40H5010	R40H5519	NR	NR
	Fd	BX		7108 - D184	MD184	R40H5010	R40H5519	NR	NR
	Fd	BX		7108 - D184	MD184	R40H5010	R40H5519	NR	NR
	Fd	BX		7108 - D184	MD184	R40H5010	R40H5519	NR	NR
	Fd	BX		7108 - D184	MD184	R40H5010	R40H5519	NR	NR
	Fd	BX		7108 - D184	MD184	R40H5010	R40H5519	NR	NR
S1723, S1753 School Bus FA101									
	Fd	BX		7108 - D184	MD184	R40H5010	R40H5519	NR	NR
	Fd	BX		7108 - D184	MD184	R40H5010	R40H5519	NR	NR
	Fd	BX		7108 - D184	MD184	R40H5010	R40H5519	NR	NR
	Fd	BX		7108 - D184	MD184	R40H5010	R40H5519	NR	NR
	Fd	BX		7108 - D184	MD184	R40H5010	R40H5519	NR	NR
	Fd	BX		7108 - D184	MD184	R40H5010	R40H5519	NR	NR
	Fd	BX		7108 - D184	MD184	R40H5010	R40H5519	NR	NR
	Fd	BX		7108 - D184	MD184	R40H5010	R40H5519	NR	NR
	Fd	BX		7108 - D184	MD184	R40H5010	R40H5519	NR	NR
	Fd	BX		7108 - D184	MD184	R40H5010	R40H5519	NR	NR
	Fd	BX		7108 - D184	MD184	R40H5010	R40H5519	NR	NR
	Fd	BX		7108 - D184	MD184	R40H5010	R40H5519	NR	NR
	Fd	BX		7108 - D184	MD184	R40H5010	R40H5519	NR	NR
	Fd	BX		7108 - D184	MD184	R40H5010	R40H5519	NR	NR
	Fd	BX		7108 - D184	MD184	R40H5010	R40H5519	NR	NR
	Fd	BX		7108 - D184	MD184	R40H5010	R40H5519	NR	NR
	Fd	BX		7108 - D184	MD184	R40H5010	R40H5519	NR	NR
	Fd	BX		7108 - D184	MD184	R40H5010	R40H5519	NR	NR
	Fd	BX		7108 - D184	MD184	R40H5010	R40H5519	NR	NR
	Fd	BX		7108 - D184	MD184	R40H5010	R40H5519	NR	NR
	Fd	BX		7108 - D184	MD184	R40H5010	R40H5519	NR	NR
	Fd	BX		7108 - D184	MD184	R40H5010	R40H5519	NR	NR
	Fd	BX		7108 - D184	MD184	R40H5010	R40H5519	NR	NR
	Fd	BX		7108 - D184	MD184	R40H5010	R40H5519	NR	NR
	Fd	BX		7108 - D184	MD184	R40H5010	R40H5519	NR	NR
	Fd	BX		7108 - D184	MD184	R40H5010	R40H5519	NR	NR
	Fd	BX		7108 - D184	MD184	R40H5010	R40H5519	NR	NR
	Fd	BX		7108 - D184	MD184	R40H5010	R40H5519	NR	NR
	Fd	BX		7108 - D184	MD184	R40H5010	R40H5519	NR	NR
S1723, S1753 School Bus FA309, 329, 339									
	Fd	BX		7142 - D225	MD225	R40H5010	R40H5522	NR	NR
	Fd	BX		7142 - D225	MD225	R40H5010	R40H5522	NR	NR
	Fd	BX		7142 - D225	MD225	R40H5010	R40H5522	NR	NR
	Fd	BX		7142 - D225	MD225	R40H5010	R40H5522	NR	NR

37 - Also available as a New unit

38 - First design, may have external joining tube and uses steel pistons

39 - First design, uses steel pistons.

40 - For chrome plated steel version, use R4090070P

53 - Power Brakes

201 - Steel Piston

266 - 10 Stud, Hat Shaped

268 - 5 Stud, Hat Shape

271 - 6 Stud, Hat Shape

MERITOR DRUM OR ROTOR NO.	CALIPER OR CYLINDER BORE SIZE	MERITOR CALIPER OR WHEEL CYLINDER (LEFT)	MERITOR CALIPER OR WHEEL CYLINDER (RIGHT)	MERITOR CALIPER OR WHEEL CYLINDER REPAIR KIT	MERITOR CALIPER PISTON	MERITOR MASTER CYLINDER	MERITOR MASTER CYLINDER KIT	MERITOR BRAKE HOSE (LEFT)	MERITOR BRAKE HOSE (RIGHT)
									ITE(Cont.)
170, 1700, 1710, 1723, 1724, 1750, 1753, 1754 SERIES CONVENTIONAL CAB, SCHOOL BUS, TILT CAB(Cont.)									
23-122920-002[273]	3-3/8 "	R42R55099	R42R55098[37]	R4066780	R4090021[201]	N/A[53]	-	R458635	R458635
23-122920-002[273]	3-3/8 "	R42R55099	R42R55098[37]	R4066780	R4090021[201]	N/A[53]	-	R458635	R458635
R44141476[268]	3-3/8 "	R42R55099	R42R55098[37]	R4066780	R4090021[201]	N/A[53]	-	N/A	N/A
R44141476[268]	3-3/8 "	R42R55099	R42R55098[37]	R4066780	R4090021[201]	N/A[53]	-	R458635	R458635
23-122920-002[273]	3-3/8 "	R42R55099	R42R55098[37]	R4066780	R4090021[201]	N/A[53]	-	R458632	R458632
R44141476[268]	3-3/8 "	R42R55099	R42R55098[37]	R4066780	R4090021[201]	N/A[53]	-	N/A	N/A
23-122920-002[273]	3-3/8 "	R42R55099	R42R55098[37]	R4066780	R4090021[201]	N/A[53]	-	R458632	R458632
R44141858[275]	3-3/8 "	R42R55099	R42R55098[37]	R4066780	R4090021[201]	N/A[53]	-	R458636	R458636
23-123572-004[271]	3-3/8 "	R42R55099	R42R55098[37]	R4066780	R4090021[201]	N/A[53]	-	R458636	R458636
23-123552-004[266]	3-3/8 "	R42R55099	R42R55098[37]	R4066780	R4090021[201]	N/A[53]	-	N/A	N/A
R44141858[275]	3-3/8 "	R42R55099	R42R55098[37]	R4066780	R4090021[201]	N/A[53]	-	R458636	R458636
23-123572-004[271]	3-3/8 "	R42R55099	R42R55098[37]	R4066780	R4090021[201]	N/A[53]	-	R458636	R458636
R44141476[268]	3-3/8 "	R42R55099	R42R55098[37]	R4066780	R4090021[201]	N/A[53]	-	R458632	R458632
23-122920-002[273]	3-3/8 "	R42R55099	R42R55098[37]	R4066780	R4090021[201]	N/A[53]	-	N/A	N/A
R44141476[268]	3-3/8 "	R42R55099	R42R55098[37]	R4066780	R4090021[201]	N/A[53]	-	R458632	R458632
R44141858[275]	3-3/8 "	R42R55099	R42R55098[37]	R4066780	R4090021[201]	N/A[53]	-	R458635	R458635
R44141858[275]	3-3/8 "	R42R55099	R42R55098[37]	R4066780	R4090021[201]	N/A[53]	-	R458635	R458635
23-122920-002[273]	3-3/8 "	R42R55099	R42R55098[37]	R4066780	R4090021[201]	N/A[53]	-	R458636	R458636
23-123552-004[266]	3-3/8 "	R42R55099	R42R55098[37]	R4066780	R4090021[201]	N/A[53]	-	R458632	R458632
23-123572-004[271]	3-3/8 "	R42R55099	R42R55098[37]	R4066780	R4090021[201]	N/A[53]	-	R458635	R458635
23-123552-004[266]	3-3/8 "	R42R55099	R42R55098[37]	R4066780	R4090021[201]	N/A[53]	-	R458636	R458636
23-123552-004[266]	3-3/8 "	R42R55099	R42R55098[37]	R4066780	R4090021[201]	N/A[53]	-	N/A	N/A
23-123572-004[271]	3-3/8 "	R42R55099	R42R55098[37]	R4066780	R4090021[201]	N/A[53]	-	R458632	R458632
R44141476[268]	3-3/8 "	R42R55099	R42R55098[37]	R4066780	R4090021[201]	N/A[53]	-	R458636	R458636
R44141858[275]	3-3/8 "	R42R55099	R42R55098[37]	R4066780	R4090021[201]	N/A[53]	-	R458632	R458632
R44141858[275]	3-3/8 "	R42R55099	R42R55098[37]	R4066780	R4090021[201]	N/A[53]	-	N/A	N/A
23-123572-004[271]	3-3/8 "	R42R55099	R42R55098[37]	R4066780	R4090021[201]	N/A[53]	-	N/A	N/A
23-122920-002[273]	3-3/8 "	R42R55099	R42R55098[37]	R4066780	R4090021[201]	N/A[53]	-	N/A	N/A
R44141476[268]	3-3/8 "	R42R55099	R42R55098[37]	R4066780	R4090021[201]	N/A[53]	-	R458635	R458635
23-123552-004[266]	3-3/8 "	R42R55099	R42R55098[37]	R4066780	R4090021[201]	N/A[53]	-	R458636	R458636
23-123552-004[266]	3-3/8 "	R42R55099	R42R55098[37]	R4066780	R4090021[201]	N/A[53]	-	R458632	R458632
23-123572-004[271]	3-3/8 "	R42R55099	R42R55098[37]	R4066780	R4090021[201]	N/A[53]	-	R458635	R458635
23-122920-002[273]	3-3/8 "	R42R55099	R42R55098[37]	R4066780	R4090021[201]	N/A[53]	-	R458636	R458636
23-123552-004[266]	2-19/32 "	R42R55245	R42R55245[38]	R402235118	R402238231[201]	N/A[53]	-	R458636	R458636
23-123552-004[266]	2-19/32 "	R42R55245	R42R55245[38]	R402235118	R402238231[201]	N/A[53]	-	N/A	N/A
R44141858[275]	2-19/32 "	R42R55245	R42R55245[38]	R402235118	R402238231[201]	N/A[53]	-	R458632	R458632
R44141476[268]	2-19/32 "	R42R55245	R42R55245[38]	R402235118	R402238231[201]	N/A[53]	-	R458632	R458632
23-123572-004[271]	2-19/32 "	R42R55245	R42R55245[38]	R402235118	R402238231[201]	N/A[53]	-	R458632	R458632
23-122920-002[273]	2-19/32 "	R42R55245	R42R55245[38]	R402235118	R402238231[201]	N/A[53]	-	N/A	N/A
23-122527-002[272]	2-19/32 "	R42R55245	R42R55245[38]	R402235118	R402238231[201]	N/A[53]	-	R458636	R458636
23-123552-004[266]	2-19/32 "	R42R55245	R42R55245[38]	R402235118	R402238231[201]	N/A[53]	-	R458632	R458632
R44141858[275]	2-19/32 "	R42R55245	R42R55245[38]	R402235118	R402238231[201]	N/A[53]	-	R458636	R458636
23-122527-002[272]	2-19/32 "	R42R55245	R42R55245[38]	R402235118	R402238231[201]	N/A[53]	-	N/A	N/A
R44141858[275]	2-19/32 "	R42R55245	R42R55245[38]	R402235118	R402238231[201]	N/A[53]	-	R458635	R458635
23-123572-004[271]	2-19/32 "	R42R55245	R42R55245[38]	R402235118	R402238231[201]	N/A[53]	-	R458635	R458635
23-122527-002[272]	2-19/32 "	R42R55245	R42R55245[38]	R402235118	R402238231[201]	N/A[53]	-	R458635	R458635
23-123572-004[271]	2-19/32 "	R42R55245	R42R55245[38]	R402235118	R402238231[201]	N/A[53]	-	R458636	R458636
23-122920-002[273]	2-19/32 "	R42R55245	R42R55245[38]	R402235118	R402238231[201]	N/A[53]	-	R458632	R458632
23-122527-002[272]	2-19/32 "	R42R55245	R42R55245[38]	R402235118	R402238231[201]	N/A[53]	-	R458632	R458632
R44141476[268]	2-19/32 "	R42R55245	R42R55245[38]	R402235118	R402238231[201]	N/A[53]	-	R458635	R458635
23-122920-002[273]	2-19/32 "	R42R55245	R42R55245[38]	R402235118	R402238231[201]	N/A[53]	-	R458636	R458636
R44141476[268]	2-19/32 "	R42R55245	R42R55245[38]	R402235118	R402238231[201]	N/A[53]	-	R458636	R458636
23-122920-002[273]	2-19/32 "	R42R55245	R42R55245[38]	R402235118	R402238231[201]	N/A[53]	-	R458635	R458635
R44141476[268]	2-19/32 "	R42R55245	R42R55245[38]	R402235118	R402238231[201]	N/A[53]	-	N/A	N/A
23-123552-004[266]	2-19/32 "	R42R55245	R42R55245[38]	R402235118	R402238231[201]	N/A[53]	-	R458635	R458635
23-123572-004[271]	2-19/32 "	R42R55245	R42R55245[38]	R402235118	R402238231[201]	N/A[53]	-	N/A	N/A
R44141858[275]	2-19/32 "	R42R55245	R42R55245[38]	R402235118	R402238231[201]	N/A[53]	-	N/A	N/A
23-123572-004[271]	2-7/8 "	R429218X	R429218X[39]	R406532	R4090070[40]	N/A[53]	-	N/A	N/A
23-123552-004[266]	2-7/8 "	R429218X	R429218X[39]	R406532	R4090070[40]	N/A[53]	-	R458632	R458632
R44141858[275]	2-7/8 "	R429218X	R429218X[39]	R406532	R4090070[40]	N/A[53]	-	R458636	R458636
R44141476[268]	2-7/8 "	R429218X	R429218X[39]	R406532	R4090070[40]	N/A[53]	-	R458632	R458632

272 - 6 Stud, U Shape

273 - 5 Stud, U Shape, .780 Dia. Studs

275 - 5 Stud, U Shape, .656 Dia. Studs

MAKE MODEL YEAR AXLE CODE AXLE WEIGHT	AXLE & BRK. TYPE	BRK. MFG.	BRAKE SIZE	FMSI	MERITOR DISC PAD OR BRAKE SHOE	MERITOR GUIDE PIN OR RETURN SPRING KIT	MERITOR CALIPER HWD. KIT OR RETURN SPRING KIT	MERITOR ADJUSTER KIT (LEFT WHEEL)	MERITOR ADJUSTER KIT (RIGHT WHEEL)
ITE(Cont.)									
170, 1700, 1710, 1723, 1724, 1750, 1753, 1754 SERIES CONVENTIONAL CAB, SCHOOL BUS, TILT CAB(Cont.)									
1986									
	Fd	BX		7142 - D225	MD225	R40H5010	R40H5522	NR	NR
	Fd	BX		7142 - D225	MD225	R40H5010	R40H5522	NR	NR
	Fd	BX		7142 - D225	MD225	R40H5010	R40H5522	NR	NR
	Fd	BX		7142 - D225	MD225	R40H5010	R40H5522	NR	NR
	Fd	BX		7142 - D225	MD225	R40H5010	R40H5522	NR	NR
	Fd	BX		7142 - D225	MD225	R40H5010	R40H5522	NR	NR
	Fd	BX		7142 - D225	MD225	R40H5010	R40H5522	NR	NR
	Fd	BX		7142 - D225	MD225	R40H5010	R40H5522	NR	NR
	Fd	BX		7142 - D225	MD225	R40H5010	R40H5522	NR	NR
	Fd	BX		7142 - D225	MD225	R40H5010	R40H5522	NR	NR
	Fd	BX		7142 - D225	MD225	R40H5010	R40H5522	NR	NR
	Fd	BX		7142 - D225	MD225	R40H5010	R40H5522	NR	NR
	Fd	BX		7142 - D225	MD225	R40H5010	R40H5522	NR	NR
	Fd	BX		7142 - D225	MD225	R40H5010	R40H5522	NR	NR
	Fd	BX		7142 - D225	MD225	R40H5010	R40H5522	NR	NR
	Fd	BX		7142 - D225	MD225	R40H5010	R40H5522	NR	NR
	Fd	BX		7142 - D225	MD225	R40H5010	R40H5522	NR	NR
	Fd	BX		7142 - D225	MD225	R40H5010	R40H5522	NR	NR
	Fd	BX		7142 - D225	MD225	R40H5010	R40H5522	NR	NR
	Fd	BX		7142 - D225	MD225	R40H5010	R40H5522	NR	NR
	Fd	BX		7142 - D225	MD225	R40H5010	R40H5522	NR	NR
	Fd	BX		7142 - D225	MD225	R40H5010	R40H5522	NR	NR
	Fd	BX		7142 - D225	MD225	R40H5010	R40H5522	NR	NR
	Fd	BX		7142 - D225	MD225	R40H5010	R40H5522	NR	NR
	Fd	BX		7142 - D225	MD225	R40H5010	R40H5522	NR	NR
	Fd	BX		7142 - D225	MD225	R40H5010	R40H5522	NR	NR
	Fd	BX		7142 - D225	MD225	R40H5010	R40H5522	NR	NR
	Fd	BX		7142 - D225	MD225	R40H5010	R40H5522	NR	NR
	Fd	BX		7142 - D225	MD225	R40H5010	R40H5522	NR	NR
	Fd	BX		7142 - D225	MD225	R40H5010	R40H5522	NR	NR
	Fd	BX		7142 - D225	MD225	R40H5010	R40H5522	NR	NR
	Fd	BX		7142 - D225	MD225	R40H5010	R40H5522	NR	NR
	Fd	BX		7142 - D225	MD225	R40H5010	R40H5522	NR	NR
	Fd	BX		7142 - D225	MD225	R40H5010	R40H5522	NR	NR
	Fd	BX		7142 - D225	MD225	R40H5010	R40H5522	NR	NR
	Fd	BX		7142 - D225	MD225	R40H5010	R40H5522	NR	NR
	Fd	BX		7142 - D225	MD225	R40H5010	R40H5522	NR	NR
	Fd	BX		7142 - D225	MD225	R40H5010	R40H5522	NR	NR
	Fd	BX		7142 - D225	MD225	R40H5010	R40H5522	NR	NR
	Fd	BX		7142 - D225	MD225	R40H5010	R40H5522	NR	NR
	Fd	BX		7142 - D225	MD225	R40H5010	R40H5522	NR	NR
	Fd	BX		7142 - D225	MD225	R40H5010	R40H5522	NR	NR
	Fd	BX		7142 - D225	MD225	R40H5010	R40H5522	NR	NR
	Fd	BX		7142 - D225	MD225	R40H5010	R40H5522	NR	NR
	Fd	BX		7142 - D225	MD225	R40H5010	R40H5522	NR	NR
	Fd	BX		7142 - D225	MD225	R40H5010	R40H5522	NR	NR
	Fd	BX		7142 - D225	MD225	R40H5010	R40H5522	NR	NR
	Fd	BX		7142 - D225	MD225	R40H5010	R40H5522	NR	NR
	Fd	BX		7142 - D225	MD225	R40H5010	R40H5522	NR	NR
	Fd	BX		7142 - D225	MD225	R40H5010	R40H5522	NR	NR
	Fd	BX		7142 - D225	MD225	R40H5010	R40H5522	NR	NR
	Fd	BX		7142 - D225	MD225	R40H5010	R40H5522	NR	NR
	Fd	BX		7142 - D225	MD225	R40H5010	R40H5522	NR	NR
	Fd	BX		7142 - D225	MD225	R40H5010	R40H5522	NR	NR
	Fd	BX		7142 - D225	MD225	R40H5010	R40H5522	NR	NR
	Fd	BX		7142 - D225	MD225	R40H5010	R40H5522	NR	NR
	Fd	BX		7142 - D225	MD225	R40H5010	R40H5522	NR	NR
	Fd	BX		7142 - D225	MD225	R40H5010	R40H5522	NR	NR
	Fd	BX		7142 - D225	MD225	R40H5010	R40H5522	NR	NR
	Fd	BX		7142 - D225	MD225	R40H5010	R40H5522	NR	NR
	Fd	BX		7142 - D225	MD225	R40H5010	R40H5522	NR	NR
	Fd	BX		7142 - D225	MD225	R40H5010	R40H5522	NR	NR
	Fd	BX		7142 - D225	MD225	R40H5010	R40H5522	NR	NR

39 - First design, uses steel pistons.
40 - For chrome plated steel version, use R4090070P
53 - Power Brakes
266 - 10 Stud, Hat Shaped
268 - 5 Stud, Hat Shape
271 - 6 Stud, Hat Shape
272 - 6 Stud, U Shape
273 - 5 Stud, U Shape, .780 Dia. Studs
275 - 5 Stud, U Shape, .656 Dia. Studs

MERITOR DRUM OR ROTOR NO.	CALIPER OR CYLINDER BORE SIZE	MERITOR CALIPER OR WHEEL CYLINDER (LEFT)	MERITOR CALIPER OR WHEEL CYLINDER (RIGHT)	MERITOR CALIPER OR WHEEL CYLINDER REPAIR KIT	MERITOR CALIPER PISTON	MERITOR MASTER CYLINDER	MERITOR MASTER CYLINDER KIT	MERITOR BRAKE HOSE (LEFT)	MERITOR BRAKE HOSE (RIGHT)
									ITE(Cont.)
170, 1700, 1710, 1723, 1724, 1750, 1753, 1754 SERIES CONVENTIONAL CAB, SCHOOL BUS, TILT CAB(Cont.)									
23-123572-004[271]	2-7/8 "	R429218X	R429218X[39]	R406532	R4090070[40]	N/A[53]	-	N/A	N/A
23-123552-004[266]	2-7/8 "	R429218X	R429218X[39]	R406532	R4090070[40]	N/A[53]	-	R458632	R458632
23-122527-002[272]	2-7/8 "	R429218X	R429218X[39]	R406532	R4090070[40]	N/A[53]	-	R458635	R458635
R44141858[275]	2-7/8 "	R429218X	R429218X[39]	R406532	R4090070[40]	N/A[53]	-	N/A	N/A
R44141858[275]	2-7/8 "	R429218X	R429218X[39]	R406532	R4090070[40]	N/A[53]	-	N/A	N/A
23-122527-002[272]	2-7/8 "	R429218X	R429218X[39]	R406532	R4090070[40]	N/A[53]	-	R458635	R458635
23-122920-002[273]	2-7/8 "	R429218X	R429218X[39]	R406532	R4090070[40]	N/A[53]	-	N/A	N/A
23-123552-004[266]	2-7/8 "	R429218X	R429218X[39]	R406532	R4090070[40]	N/A[53]	-	R458635	R458635
R44141476[268]	2-7/8 "	R429218X	R429218X[39]	R406532	R4090070[40]	N/A[53]	-	R458632	R458632
23-123572-004[271]	2-7/8 "	R429218X	R429218X[39]	R406532	R4090070[40]	N/A[53]	-	R458636	R458636
R44141476[268]	2-7/8 "	R429218X	R429218X[39]	R406532	R4090070[40]	N/A[53]	-	R458636	R458636
23-122527-002[272]	2-7/8 "	R429218X	R429218X[39]	R406532	R4090070[40]	N/A[53]	-	R458632	R458632
23-122920-002[273]	2-7/8 "	R429218X	R429218X[39]	R406532	R4090070[40]	N/A[53]	-	R458632	R458632
23-123572-004[271]	2-7/8 "	R429218X	R429218X[39]	R406532	R4090070[40]	N/A[53]	-	R458632	R458632
23-123572-004[271]	2-7/8 "	R429218X	R429218X[39]	R406532	R4090070[40]	N/A[53]	-	R458636	R458636
23-123552-004[266]	2-7/8 "	R429218X	R429218X[39]	R406532	R4090070[40]	N/A[53]	-	R458632	R458632
R44141858[275]	2-7/8 "	R429218X	R429218X[39]	R406532	R4090070[40]	N/A[53]	-	R458636	R458636
R44141858[275]	2-7/8 "	R429218X	R429218X[39]	R406532	R4090070[40]	N/A[53]	-	R458632	R458632
23-123572-004[271]	2-7/8 "	R429218X	R429218X[39]	R406532	R4090070[40]	N/A[53]	-	R458635	R458635
23-123552-004[266]	2-7/8 "	R429218X	R429218X[39]	R406532	R4090070[40]	N/A[53]	-	R458636	R458636
23-123552-004[266]	2-7/8 "	R429218X	R429218X[39]	R406532	R4090070[40]	N/A[53]	-	N/A	N/A
R44141858[275]	2-7/8 "	R429218X	R429218X[39]	R406532	R4090070[40]	N/A[53]	-	R458635	R458635
23-122920-002[273]	2-7/8 "	R429218X	R429218X[39]	R406532	R4090070[40]	N/A[53]	-	R458635	R458635
23-122527-002[272]	2-7/8 "	R429218X	R429218X[39]	R406532	R4090070[40]	N/A[53]	-	N/A	N/A
23-123552-004[266]	2-7/8 "	R429218X	R429218X[39]	R406532	R4090070[40]	N/A[53]	-	R458636	R458636
23-122920-002[273]	2-7/8 "	R429218X	R429218X[39]	R406532	R4090070[40]	N/A[53]	-	R458635	R458635
23-123572-004[271]	2-7/8 "	R429218X	R429218X[39]	R406532	R4090070[40]	N/A[53]	-	R458635	R458635
R44141858[275]	2-7/8 "	R429218X	R429218X[39]	R406532	R4090070[40]	N/A[53]	-	R458635	R458635
23-122527-002[272]	2-7/8 "	R429218X	R429218X[39]	R406532	R4090070[40]	N/A[53]	-	R458635	R458635
R44141476[268]	2-7/8 "	R429218X	R429218X[39]	R406532	R4090070[40]	N/A[53]	-	R458636	R458636
23-123572-004[271]	2-7/8 "	R429218X	R429218X[39]	R406532	R4090070[40]	N/A[53]	-	R458635	R458635
23-123552-004[266]	2-7/8 "	R429218X	R429218X[39]	R406532	R4090070[40]	N/A[53]	-	R458635	R458635
R44141476[268]	2-7/8 "	R429218X	R429218X[39]	R406532	R4090070[40]	N/A[53]	-	N/A	N/A
23-122527-002[272]	2-7/8 "	R429218X	R429218X[39]	R406532	R4090070[40]	N/A[53]	-	N/A	N/A
23-122527-002[272]	2-7/8 "	R429218X	R429218X[39]	R406532	R4090070[40]	N/A[53]	-	N/A	N/A
R44141476[268]	2-7/8 "	R429218X	R429218X[39]	R406532	R4090070[40]	N/A[53]	-	N/A	N/A
23-122920-002[273]	2-7/8 "	R429218X	R429218X[39]	R406532	R4090070[40]	N/A[53]	-	R458635	R458635
23-122920-002[273]	2-7/8 "	R429218X	R429218X[39]	R406532	R4090070[40]	N/A[53]	-	R458632	R458632
23-122527-002[272]	2-7/8 "	R429218X	R429218X[39]	R406532	R4090070[40]	N/A[53]	-	R458632	R458632
R44141476[268]	2-7/8 "	R429218X	R429218X[39]	R406532	R4090070[40]	N/A[53]	-	R458635	R458635
23-122920-002[273]	2-7/8 "	R429218X	R429218X[39]	R406532	R4090070[40]	N/A[53]	-	R458636	R458636
23-123552-004[266]	2-7/8 "	R429218X	R429218X[39]	R406532	R4090070[40]	N/A[53]	-	N/A	N/A
23-123572-004[271]	2-7/8 "	R429218X	R429218X[39]	R406532	R4090070[40]	N/A[53]	-	R458635	R458635
23-123552-004[266]	2-7/8 "	R429218X	R429218X[39]	R406532	R4090070[40]	N/A[53]	-	R458636	R458636
R44141858[275]	2-7/8 "	R429218X	R429218X[39]	R406532	R4090070[40]	N/A[53]	-	R458636	R458636
23-122527-002[272]	2-7/8 "	R429218X	R429218X[39]	R406532	R4090070[40]	N/A[53]	-	N/A	N/A
23-122920-002[273]	2-7/8 "	R429218X	R429218X[39]	R406532	R4090070[40]	N/A[53]	-	R458632	R458632
R44141476[268]	2-7/8 "	R429218X	R429218X[39]	R406532	R4090070[40]	N/A[53]	-	N/A	N/A
23-123552-004[266]	2-7/8 "	R429218X	R429218X[39]	R406532	R4090070[40]	N/A[53]	-	N/A	N/A
23-122527-002[272]	2-7/8 "	R429218X	R429218X[39]	R406532	R4090070[40]	N/A[53]	-	R458636	R458636
23-123572-004[271]	2-7/8 "	R429218X	R429218X[39]	R406532	R4090070[40]	N/A[53]	-	R458635	R458635
23-122527-002[272]	2-7/8 "	R429218X	R429218X[39]	R406532	R4090070[40]	N/A[53]	-	R458632	R458632
R44141858[275]	2-7/8 "	R429218X	R429218X[39]	R406532	R4090070[40]	N/A[53]	-	R458635	R458635
23-122527-002[272]	2-7/8 "	R429218X	R429218X[39]	R406532	R4090070[40]	N/A[53]	-	R458636	R458636
23-123552-004[266]	2-7/8 "	R429218X	R429218X[39]	R406532	R4090070[40]	N/A[53]	-	N/A	N/A
R44141858[275]	2-7/8 "	R429218X	R429218X[39]	R406532	R4090070[40]	N/A[53]	-	R458635	R458635
R44141476[268]	2-7/8 "	R429218X	R429218X[39]	R406532	R4090070[40]	N/A[53]	-	R458636	R458636
23-123572-004[271]	2-7/8 "	R429218X	R429218X[39]	R406532	R4090070[40]	N/A[53]	-	R458632	R458632
23-123572-004[271]	2-7/8 "	R429218X	R429218X[39]	R406532	R4090070[40]	N/A[53]	-	R458636	R458636
R44141476[268]	2-7/8 "	R429218X	R429218X[39]	R406532	R4090070[40]	N/A[53]	-	R458632	R458632
23-123552-004[266]	2-7/8 "	R429218X	R429218X[39]	R406532	R4090070[40]	N/A[53]	-	R458635	R458635
23-122920-002[273]	2-7/8 "	R429218X	R429218X[39]	R406532	R4090070[40]	N/A[53]	-	N/A	N/A
R44141858[275]	2-7/8 "	R429218X	R429218X[39]	R406532	R4090070[40]	N/A[53]	-	R458636	R458636

ITE(Cont.)

170, 1700, 1710, 1723, 1724, 1750, 1753, 1754 SERIES CONVENTIONAL CAB, SCHOOL BUS, TILT CAB(Cont.)

MAKE MODEL YEAR AXLE CODE AXLE WEIGHT	AXLE & BRK. TYPE	BRK. MFG.	BRAKE SIZE	FMSI	MERITOR DISC PAD OR BRAKE SHOE	MERITOR GUIDE PIN OR RETURN SPRING KIT	MERITOR CALIPER HWD. KIT OR RETURN SPRING KIT	MERITOR ADJUSTER KIT (LEFT WHEEL)	MERITOR ADJUSTER KIT (RIGHT WHEEL)
1986 S1723, S1753 School Bus FA309, 329, 339	Fd	BX		7142 - D225	MD225	R40H5010	R40H5522	NR	NR
	Fd	BX		7142 - D225	MD225	R40H5010	R40H5522	NR	NR
	Fd	BX		7142 - D225	MD225	R40H5010	R40H5522	NR	NR
	Fd	BX		7142 - D225	MD225	R40H5010	R40H5522	NR	NR
	Fd	BX		7142 - D225	MD225	R40H5010	R40H5522	NR	NR
	Fd	BX		7142 - D225	MD225	R40H5010	R40H5522	NR	NR
	Fd	BX		7142 - D225	MD225	R40H5010	R40H5522	NR	NR
	Fd	BX		7142 - D225	MD225	R40H5010	R40H5522	NR	NR
	Fd	BX		7142 - D225	MD225	R40H5010	R40H5522	NR	NR
	Fd	BX		7142 - D225	MD225	R40H5010	R40H5522	NR	NR
	Fd	BX		7142 - D225	MD225	R40H5010	R40H5522	NR	NR
	Fd	BX		7142 - D225	MD225	R40H5010	R40H5522	NR	NR
	Fd	BX		7142 - D225	MD225	R40H5010	R40H5522	NR	NR
	Fd	BX		7142 - D225	MD225	R40H5010	R40H5522	NR	NR
	Fd	BX		7142 - D225	MD225	R40H5010	R40H5522	NR	NR
	Fd	BX		7142 - D225	MD225	R40H5010	R40H5522	NR	NR
	Fd	BX		7142 - D225	MD225	R40H5010	R40H5522	NR	NR
	Fd	BX		7142 - D225	MD225	R40H5010	R40H5522	NR	NR
	Fd	BX		7142 - D225	MD225	R40H5010	R40H5522	NR	NR
	Fd	BX		7142 - D225	MD225	R40H5010	R40H5522	NR	NR
	Fd	BX		7142 - D225	MD225	R40H5010	R40H5522	NR	NR
	Fd	BX		7142 - D225	MD225	R40H5010	R40H5522	NR	NR
	Fd	BX		7142 - D225	MD225	R40H5010	R40H5522	NR	NR
	Fd	BX		7142 - D225	MD225	R40H5010	R40H5522	NR	NR
	Fd	BX		7142 - D225	MD225	R40H5010	R40H5522	NR	NR
	Fd	BX		7142 - D225	MD225	R40H5010	R40H5522	NR	NR
	Fd	BX		7142 - D225	MD225	R40H5010	R40H5522	NR	NR
	Fd	BX		7142 - D225	MD225	R40H5010	R40H5522	NR	NR
	Fd	BX		7142 - D225	MD225	R40H5010	R40H5522	NR	NR
	Fd	BX		7142 - D225	MD225	R40H5010	R40H5522	NR	NR
	Fd	BX		7142 - D225	MD225	R40H5010	R40H5522	NR	NR
	Fd	BX		7142 - D225	MD225	R40H5010	R40H5522	NR	NR
	Fd	BX		7142 - D225	MD225	R40H5010	R40H5522	NR	NR
	Fd	BX		7142 - D225	MD225	R40H5010	R40H5522	NR	NR
	Fd	BX		7142 - D225	MD225	R40H5010	R40H5522	NR	NR
	Fd	BX		7142 - D225	MD225	R40H5010	R40H5522	NR	NR
	Fd	BX		7142 - D225	MD225	R40H5010	R40H5522	NR	NR
	Fd	BX		7142 - D225	MD225	R40H5010	R40H5522	NR	NR
	Fd	BX		7142 - D225	MD225	R40H5010	R40H5522	NR	NR
	Fd	BX		7142 - D225	MD225	R40H5010	R40H5522	NR	NR
	Fd	BX		7142 - D225	MD225	R40H5010	R40H5522	NR	NR
	Fd	BX		7142 - D225	MD225	R40H5010	R40H5522	NR	NR
	Fd	BX		7142 - D225	MD225	R40H5010	R40H5522	NR	NR
	Fd	BX		7142 - D225	MD225	R40H5010	R40H5522	NR	NR
	Fd	BX		7142 - D225	MD225	R40H5010	R40H5522	NR	NR
	Fd	BX		7142 - D225	MD225	R40H5010	R40H5522	NR	NR
	Fd	BX		7142 - D225	MD225	R40H5010	R40H5522	NR	NR
	Fd	BX		7142 - D225	MD225	R40H5010	R40H5522	NR	NR
	Fd	BX		7142 - D225	MD225	R40H5010	R40H5522	NR	NR
	Fd	BX		7142 - D225	MD225	R40H5010	R40H5522	NR	NR
	Fd	BX		7142 - D225	MD225	R40H5010	R40H5522	NR	NR
	Fd	BX		7142 - D225	MD225	R40H5010	R40H5522	NR	NR
	Fd	BX		7142 - D225	MD225	R40H5010	R40H5522	NR	NR
	Fd	BX		7142 - D225	MD225	R40H5010	R40H5522	NR	NR
	Fd	BX		7142 - D225	MD225	R40H5010	R40H5522	NR	NR
	Fd	BX		7142 - D225	MD225	R40H5010	R40H5522	NR	NR
	Fd	BX		7142 - D225	MD225	R40H5010	R40H5522	NR	NR
	Fd	BX		7142 - D225	MD225	R40H5010	R40H5522	NR	NR
	Fd	BX		7142 - D225	MD225	R40H5010	R40H5522	NR	NR
	Fd	BX		7142 - D225	MD225	R40H5010	R40H5522	NR	NR
	Fd	BX		7142 - D225	MD225	R40H5010	R40H5522	NR	NR
	Fd	BX		7142 - D225	MD225	R40H5010	R40H5522	NR	NR

39 - First design, uses steel pistons.
40 - For chrome plated steel version, use R4090070P
53 - Power Brakes
266 - 10 Stud, Hat Shaped
268 - 5 Stud, Hat Shape
271 - 6 Stud, Hat Shape
272 - 6 Stud, U Shape
273 - 5 Stud, U Shape, .780 Dia. Studs
275 - 5 Stud, U Shape, .656 Dia. Studs

MERITOR DRUM OR ROTOR NO.	CALIPER OR CYLINDER BORE SIZE	MERITOR CALIPER OR WHEEL CYLINDER (LEFT)	MERITOR CALIPER OR WHEEL CYLINDER (RIGHT)	MERITOR CALIPER OR WHEEL CYLINDER REPAIR KIT	MERITOR CALIPER PISTON	MERITOR MASTER CYLINDER	MERITOR MASTER CYLINDER KIT	MERITOR BRAKE HOSE (LEFT)	MERITOR BRAKE HOSE (RIGHT)
									ITE(Cont.)
170, 1700, 1710, 1723, 1724, 1750, 1753, 1754 SERIES CONVENTIONAL CAB, SCHOOL BUS, TILT CAB(Cont.)									
23-122527-002[272]	2-7/8 "	R429218X	R429218X[39]	R406532	R4090070[40]	N/A[53]	-	R458635	R458635
23-122920-002[273]	2-7/8 "	R429218X	R429218X[39]	R406532	R4090070[40]	N/A[53]	-	R458636	R458636
23-122920-002[273]	2-7/8 "	R429218X	R429218X[39]	R406532	R4090070[40]	N/A[53]	-	N/A	N/A
R44141858[275]	2-7/8 "	R429218X	R429218X[39]	R406532	R4090070[40]	N/A[53]	-	R458636	R458636
23-122920-002[273]	2-7/8 "	R429218X	R429218X[39]	R406532	R4090070[40]	N/A[53]	-	R458635	R458635
23-122527-002[272]	2-7/8 "	R429218X	R429218X[39]	R406532	R4090070[40]	N/A[53]	-	R458636	R458636
23-122527-002[272]	2-7/8 "	R429218X	R429218X[39]	R406532	R4090070[40]	N/A[53]	-	R458632	R458632
23-123552-004[266]	2-7/8 "	R429218X	R429218X[39]	R406532	R4090070[40]	N/A[53]	-	R458635	R458635
23-123572-004[271]	2-7/8 "	R429218X	R429218X[39]	R406532	R4090070[40]	N/A[53]	-	R458632	R458632
23-123572-004[271]	2-7/8 "	R429218X	R429218X[39]	R406532	R4090070[40]	N/A[53]	-	R458636	R458636
23-122527-002[272]	2-7/8 "	R429218X	R429218X[39]	R406532	R4090070[40]	N/A[53]	-	N/A	N/A
23-122920-002[273]	2-7/8 "	R429218X	R429218X[39]	R406532	R4090070[40]	N/A[53]	-	R458635	R458635
R44141476[268]	2-7/8 "	R429218X	R429218X[39]	R406532	R4090070[40]	N/A[53]	-	R458635	R458635
R44141476[268]	2-7/8 "	R429218X	R429218X[39]	R406532	R4090070[40]	N/A[53]	-	N/A	N/A
R44141476[268]	2-7/8 "	R429218X	R429218X[39]	R406532	R4090070[40]	N/A[53]	-	R458635	R458635
23-122527-002[272]	2-7/8 "	R429218X	R429218X[39]	R406532	R4090070[40]	N/A[53]	-	R458636	R458636
R44141476[268]	2-7/8 "	R429218X	R429218X[39]	R406532	R4090070[40]	N/A[53]	-	R458636	R458636
23-122920-002[273]	2-7/8 "	R429218X	R429218X[39]	R406532	R4090070[40]	N/A[53]	-	N/A	N/A
R44141476[268]	2-7/8 "	R429218X	R429218X[39]	R406532	R4090070[40]	N/A[53]	-	N/A	N/A
23-123552-004[266]	2-7/8 "	R429218X	R429218X[39]	R406532	R4090070[40]	N/A[53]	-	R458636	R458636
R44141476[268]	2-7/8 "	R429218X	R429218X[39]	R406532	R4090070[40]	N/A[53]	-	R458635	R458635
R44141476[268]	2-7/8 "	R429218X	R429218X[39]	R406532	R4090070[40]	N/A[53]	-	N/A	N/A
23-122527-002[272]	2-7/8 "	R429218X	R429218X[39]	R406532	R4090070[40]	N/A[53]	-	R458632	R458632
23-122920-002[273]	2-7/8 "	R429218X	R429218X[39]	R406532	R4090070[40]	N/A[53]	-	R458636	R458636
23-123572-004[271]	2-7/8 "	R429218X	R429218X[39]	R406532	R4090070[40]	N/A[53]	-	N/A	N/A
23-123572-004[271]	2-7/8 "	R429218X	R429218X[39]	R406532	R4090070[40]	N/A[53]	-	R458635	R458635
R44141858[275]	2-7/8 "	R429218X	R429218X[39]	R406532	R4090070[40]	N/A[53]	-	N/A	N/A
R44141476[268]	2-7/8 "	R429218X	R429218X[39]	R406532	R4090070[40]	N/A[53]	-	R458636	R458636
23-123552-004[266]	2-7/8 "	R429218X	R429218X[39]	R406532	R4090070[40]	N/A[53]	-	N/A	N/A
R44141476[268]	2-7/8 "	R429218X	R429218X[39]	R406532	R4090070[40]	N/A[53]	-	R458635	R458635
R44141858[275]	2-7/8 "	R429218X	R429218X[39]	R406532	R4090070[40]	N/A[53]	-	R458632	R458632
23-122527-002[272]	2-7/8 "	R429218X	R429218X[39]	R406532	R4090070[40]	N/A[53]	-	R458636	R458636
R44141858[275]	2-7/8 "	R429218X	R429218X[39]	R406532	R4090070[40]	N/A[53]	-	N/A	N/A
23-122920-002[273]	2-7/8 "	R429218X	R429218X[39]	R406532	R4090070[40]	N/A[53]	-	R458632	R458632
23-122527-002[272]	2-7/8 "	R429218X	R429218X[39]	R406532	R4090070[40]	N/A[53]	-	R458635	R458635
R44141476[268]	2-7/8 "	R429218X	R429218X[39]	R406532	R4090070[40]	N/A[53]	-	R458632	R458632
23-123552-004[266]	2-7/8 "	R429218X	R429218X[39]	R406532	R4090070[40]	N/A[53]	-	R458636	R458636
R44141858[275]	2-7/8 "	R429218X	R429218X[39]	R406532	R4090070[40]	N/A[53]	-	R458632	R458632
23-123572-004[271]	2-7/8 "	R429218X	R429218X[39]	R406532	R4090070[40]	N/A[53]	-	N/A	N/A
R44141858[275]	2-7/8 "	R429218X	R429218X[39]	R406532	R4090070[40]	N/A[53]	-	R458635	R458635
23-123552-004[266]	2-7/8 "	R429218X	R429218X[39]	R406532	R4090070[40]	N/A[53]	-	R458635	R458635
23-123572-004[271]	2-7/8 "	R429218X	R429218X[39]	R406532	R4090070[40]	N/A[53]	-	R458636	R458636
23-123552-004[266]	2-7/8 "	R429218X	R429218X[39]	R406532	R4090070[40]	N/A[53]	-	N/A	N/A
23-122920-002[273]	2-7/8 "	R429218X	R429218X[39]	R406532	R4090070[40]	N/A[53]	-	N/A	N/A
23-122527-002[272]	2-7/8 "	R429218X	R429218X[39]	R406532	R4090070[40]	N/A[53]	-	R458635	R458635
23-122920-002[273]	2-7/8 "	R429218X	R429218X[39]	R406532	R4090070[40]	N/A[53]	-	R458636	R458636
R44141858[275]	2-7/8 "	R429218X	R429218X[39]	R406532	R4090070[40]	N/A[53]	-	N/A	N/A
R44141858[275]	2-7/8 "	R429218X	R429218X[39]	R406532	R4090070[40]	N/A[53]	-	R458632	R458632
23-122527-002[272]	2-7/8 "	R429218X	R429218X[39]	R406532	R4090070[40]	N/A[53]	-	R458632	R458632
23-123572-004[271]	2-7/8 "	R429218X	R429218X[39]	R406532	R4090070[40]	N/A[53]	-	N/A	N/A
R44141476[268]	2-7/8 "	R429218X	R429218X[39]	R406532	R4090070[40]	N/A[53]	-	R458635	R458635
23-122920-002[273]	2-7/8 "	R429218X	R429218X[39]	R406532	R4090070[40]	N/A[53]	-	R458632	R458632
R44141476[268]	2-7/8 "	R429218X	R429218X[39]	R406532	R4090070[40]	N/A[53]	-	R458632	R458632
23-122920-002[273]	2-7/8 "	R429218X	R429218X[39]	R406532	R4090070[40]	N/A[53]	-	R458636	R458636
R44141476[268]	2-7/8 "	R429218X	R429218X[39]	R406532	R4090070[40]	N/A[53]	-	R458632	R458632
R44141476[268]	2-7/8 "	R429218X	R429218X[39]	R406532	R4090070[40]	N/A[53]	-	R458636	R458636
23-122527-002[272]	2-7/8 "	R429218X	R429218X[39]	R406532	R4090070[40]	N/A[53]	-	N/A	N/A
23-123552-004[266]	2-7/8 "	R429218X	R429218X[39]	R406532	R4090070[40]	N/A[53]	-	R458632	R458632
R44141858[275]	2-7/8 "	R429218X	R429218X[39]	R406532	R4090070[40]	N/A[53]	-	R458635	R458635
23-123572-004[271]	2-7/8 "	R429218X	R429218X[39]	R406532	R4090070[40]	N/A[53]	-	R458632	R458632
23-123552-004[266]	2-7/8 "	R429218X	R429218X[39]	R406532	R4090070[40]	N/A[53]	-	R458636	R458636
23-123572-004[271]	2-7/8 "	R429218X	R429218X[39]	R406532	R4090070[40]	N/A[53]	-	R458632	R458632

MAKE MODEL YEAR AXLE CODE AXLE WEIGHT	AXLE & BRK. TYPE	BRK. MFG.	BRAKE SIZE	FMSI	MERITOR DISC PAD OR BRAKE SHOE	MERITOR GUIDE PIN OR RETURN SPRING KIT	MERITOR CALIPER HWD. KIT OR RETURN SPRING KIT	MERITOR ADJUSTER KIT (LEFT WHEEL)	MERITOR ADJUSTER KIT (RIGHT WHEEL)
ITE(Cont.)									
170, 1700, 1710, 1723, 1724, 1750, 1753, 1754 SERIES CONVENTIONAL CAB, SCHOOL BUS, TILT CAB(Cont.)									
1986									
	Fd	BX		7142 - D225	MD225	R40H5010	R40H5522	NR	NR
	Fd	BX		7142 - D225	MD225	R40H5010	R40H5522	NR	NR
	Fd	BX		7142 - D225	MD225	R40H5010	R40H5522	NR	NR
	Fd	BX		7142 - D225	MD225	R40H5010	R40H5522	NR	NR
	Fd	BX		7142 - D225	MD225	R40H5010	R40H5522	NR	NR
	Fd	BX		7142 - D225	MD225	R40H5010	R40H5522	NR	NR
	Fd	BX		7142 - D225	MD225	R40H5010	R40H5522	NR	NR
	Fd	BX		7142 - D225	MD225	R40H5010	R40H5522	NR	NR
	Fd	BX		7142 - D225	MD225	R40H5010	R40H5522	NR	NR
	Fd	BX		7142 - D225	MD225	R40H5010	R40H5522	NR	NR
	Fd	BX		7142 - D225	MD225	R40H5010	R40H5522	NR	NR
S1723, S1753 School Bus									
FA73	Fd	BX		7108 - D184	MD184	R40H5010	R40H5519	NR	NR
	Fd	BX		7108 - D184	MD184	R40H5010	R40H5519	NR	NR
	Fd	BX		7108 - D184	MD184	R40H5010	R40H5519	NR	NR
	Fd	BX		7108 - D184	MD184	R40H5010	R40H5519	NR	NR
	Fd	BX		7108 - D184	MD184	R40H5010	R40H5519	NR	NR
	Fd	BX		7108 - D184	MD184	R40H5010	R40H5519	NR	NR
	Fd	BX		7108 - D184	MD184	R40H5010	R40H5519	NR	NR
	Fd	BX		7108 - D184	MD184	R40H5010	R40H5519	NR	NR
S1723, S1753 School Bus									
RA29, 30, 42, 44	Rd	BX		7142 - D225	MD225	R40H5010	R40H5522	NR	NR
	Rd	BX		7142 - D225	MD225	R40H5010	R40H5522	NR	NR
	Rd	BX		7142 - D225	MD225	R40H5010	R40H5522	NR	NR
	Rd	BX		7108 - D184	MD184	R40H5010	R40H5519	NR	NR
	Rd	BX		7108 - D184	MD184	R40H5010	R40H5519	NR	NR
	Rd	BX		7142 - D225	MD225	R40H5010	R40H5522	NR	NR
	Rd	BX		7108 - D184	MD184	R40H5010	R40H5519	NR	NR
	Rd	BX		7142 - D225	MD225	R40H5010	R40H5522	NR	NR
	Rd	BX		7142 - D225	MD225	R40H5010	R40H5522	NR	NR
	Rd	BX		7142 - D225	MD225	R40H5010	R40H5522	NR	NR
	Rd	BX		7108 - D184	MD184	R40H5010	R40H5519	NR	NR
	Rd	BX		7142 - D225	MD225	R40H5010	R40H5522	NR	NR
	Rd	BX		7142 - D225	MD225	R40H5010	R40H5522	NR	NR
	Rd	BX		7142 - D225	MD225	R40H5010	R40H5522	NR	NR
	Rd	BX		7142 - D225	MD225	R40H5010	R40H5522	NR	NR
	Rd	BX		7142 - D225	MD225	R40H5010	R40H5522	NR	NR
	Rd	BX		7142 - D225	MD225	R40H5010	R40H5522	NR	NR
	Rd	BX		7142 - D225	MD225	R40H5010	R40H5522	NR	NR
	Rd	BX		7142 - D225	MD225	R40H5010	R40H5522	NR	NR
	Rd	BX		7108 - D184	MD184	R40H5010	R40H5519	NR	NR
	Rd	BX		7108 - D184	MD184	R40H5010	R40H5519	NR	NR
	Rd	BX		7142 - D225	MD225	R40H5010	R40H5522	NR	NR
	Rd	BX		7142 - D225	MD225	R40H5010	R40H5522	NR	NR
	Rd	BX		7108 - D184	MD184	R40H5010	R40H5519	NR	NR
	Rd	BX		7108 - D184	MD184	R40H5010	R40H5519	NR	NR
	Rd	BX		7142 - D225	MD225	R40H5010	R40H5522	NR	NR
	Rd	BX		7142 - D225	MD225	R40H5010	R40H5522	NR	NR
	Rd	BX		7142 - D225	MD225	R40H5010	R40H5522	NR	NR
	Rd	BX		7142 - D225	MD225	R40H5010	R40H5522	NR	NR
	Rd	BX		7142 - D225	MD225	R40H5010	R40H5522	NR	NR
	Rd	BX		7108 - D184	MD184	R40H5010	R40H5519	NR	NR
	Rd	BX		7108 - D184	MD184	R40H5010	R40H5519	NR	NR
	Rd	BX		7142 - D225	MD225	R40H5010	R40H5522	NR	NR
	Rd	BX		7108 - D184	MD184	R40H5010	R40H5519	NR	NR
	Rd	BX		7142 - D225	MD225	R40H5010	R40H5522	NR	NR
	Rd	BX		7142 - D225	MD225	R40H5010	R40H5522	NR	NR
	Rd	BX		7108 - D184	MD184	R40H5010	R40H5519	NR	NR
	Rd	BX		7108 - D184	MD184	R40H5010	R40H5519	NR	NR
	Rd	BX		7142 - D225	MD225	R40H5010	R40H5522	NR	NR
	Rd	BX		7142 - D225	MD225	R40H5010	R40H5522	NR	NR
	Rd	BX		7142 - D225	MD225	R40H5010	R40H5522	NR	NR
	Rd	BX		7108 - D184	MD184	R40H5010	R40H5519	NR	NR
	Rd	BX		7108 - D184	MD184	R40H5010	R40H5519	NR	NR
	Rd	BX		7142 - D225	MD225	R40H5010	R40H5522	NR	NR

37 - Also available as a New unit

38 - First design, may have external joining tube and uses steel pistons

39 - First design, uses steel pistons.

40 - For chrome plated steel version, use R4090070P

52 - 18" Length

53 - Power Brakes

201 - Steel Piston

266 - 10 Stud, Hat Shaped

267 - 10 Stud, U Shaped

MERITOR DRUM OR ROTOR NO.	CALIPER OR CYLINDER BORE SIZE	MERITOR CALIPER OR WHEEL CYLINDER (LEFT)	MERITOR CALIPER OR WHEEL CYLINDER (RIGHT)	MERITOR CALIPER OR WHEEL CYLINDER REPAIR KIT	MERITOR CALIPER PISTON	MERITOR MASTER CYLINDER	MERITOR MASTER CYLINDER KIT	MERITOR BRAKE HOSE (LEFT)	MERITOR BRAKE HOSE (RIGHT)
									ITE(Cont.)
170, 1700, 1710, 1723, 1724, 1750, 1753, 1754 SERIES CONVENTIONAL CAB, SCHOOL BUS, TILT CAB(Cont.)									
23-123552-004[266]	2-7/8 "	R429218X	R429218X[39]	R406532	R4090070[40]	N/A[53]	-	R458632	R458632
23-122527-002[272]	2-7/8 "	R429218X	R429218X[39]	R406532	R4090070[40]	N/A[53]	-	R458636	R458636
23-123572-004[271]	2-7/8 "	R429218X	R429218X[39]	R406532	R4090070[40]	N/A[53]	-	N/A	N/A
R44141858[275]	2-7/8 "	R429218X	R429218X[39]	R406532	R4090070[40]	N/A[53]	-	R458632	R458632
23-123572-004[271]	2-7/8 "	R429218X	R429218X[39]	R406532	R4090070[40]	N/A[53]	-	R458636	R458636
R44141858[275]	2-7/8 "	R429218X	R429218X[39]	R406532	R4090070[40]	N/A[53]	-	N/A	N/A
23-123572-004[271]	2-7/8 "	R429218X	R429218X[39]	R406532	R4090070[40]	N/A[53]	-	R458632	R458632
23-123552-004[266]	2-7/8 "	R429218X	R429218X[39]	R406532	R4090070[40]	N/A[53]	-	R458635	R458635
R44141858[275]	2-7/8 "	R429218X	R429218X[39]	R406532	R4090070[40]	N/A[53]	-	R458636	R458636
23-123552-004[266]	2-7/8 "	R429218X	R429218X[39]	R406532	R4090070[40]	N/A[53]	-	R458632	R458632
R44141858[275]	2-7/8 "	R429218X	R429218X[39]	R406532	R4090070[40]	N/A[53]	-	R458632	R458632
23-122527-002[272]	3-3/8 "	R42R55099	R42R55098[37]	R4066780	R4090021[201]	N/A[53]	-	R458632	R458632
23-122527-002[272]	3-3/8 "	R42R55099	R42R55098[37]	R4066780	R4090021[201]	N/A[53]	-	R458636	R458636
23-122527-002[272]	3-3/8 "	R42R55099	R42R55098[37]	R4066780	R4090021[201]	N/A[53]	-	R458636	R458636
23-122527-002[272]	3-3/8 "	R42R55099	R42R55098[37]	R4066780	R4090021[201]	N/A[53]	-	R458635	R458635
23-122527-002[272]	3-3/8 "	R42R55099	R42R55098[37]	R4066780	R4090021[201]	N/A[53]	-	R458632	R458632
23-122527-002[272]	3-3/8 "	R42R55099	R42R55098[37]	R4066780	R4090021[201]	N/A[53]	-	N/A	N/A
23-122527-002[272]	3-3/8 "	R42R55099	R42R55098[37]	R4066780	R4090021[201]	N/A[53]	-	N/A	N/A
23-122527-002[272]	3-3/8 "	R42R55099	R42R55098[37]	R4066780	R4090021[201]	N/A[53]	-	R458635	R458635
R44141627[270]	2-7/8 "	R429218X	R429218X[39]	R406532	R4090070[40]	-	-	R458634[52]	R458634
R44141608[267]	2-7/8 "	R429218X	R429218X[39]	R406532	R4090070[40]	-	-	R4577512	R4577512
R44141629[269]	2-7/8 "	R429218X	R429218X[39]	R406532	R4090070[40]	-	-	R4577512	R4577512
R44141628[269]	2-19/32 "	R42R55245	R42R55245[38]	R402235118	R402238231[201]	-	-	R4577512	R4577512
23-123552-004[266]	2-19/32 "	R42R55245	R42R55245[38]	R402235118	R402238231[201]	-	-	R458634[52]	R458634
23-123572-004[271]	2-7/8 "	R429218X	R429218X[39]	R406532	R4090070[40]	-	-	R458634[52]	R458634
23-123552-004[266]	2-19/32 "	R42R55245	R42R55245[38]	R402235118	R402238231[201]	-	-	R458634[52]	R458634
23-123572-004[271]	2-7/8 "	R429218X	R429218X[39]	R406532	R4090070[40]	-	-	R458634[52]	R458634
R44141628[269]	2-7/8 "	R429218X	R429218X[39]	R406532	R4090070[40]	-	-	R4577512	R4577512
23-122527-002[272]	2-7/8 "	R429218X	R429218X[39]	R406532	R4090070[40]	-	-	R458634[52]	R458634
R44141628[269]	2-19/32 "	R42R55245	R42R55245[38]	R402235118	R402238231[201]	-	-	R458634[52]	R458634
23-122527-002[272]	2-7/8 "	R429218X	R429218X[39]	R406532	R4090070[40]	-	-	R458634[52]	R458634
23-122527-002[272]	2-7/8 "	R429218X	R429218X[39]	R406532	R4090070[40]	-	-	R458634[52]	R458634
23-123572-004[271]	2-7/8 "	R429218X	R429218X[39]	R406532	R4090070[40]	-	-	R458634[52]	R458634
R44141627[270]	2-7/8 "	R429218X	R429218X[39]	R406532	R4090070[40]	-	-	R458634[52]	R458634
23-122527-002[272]	2-7/8 "	R429218X	R429218X[39]	R406532	R4090070[40]	-	-	R4577512	R4577512
R44141628[269]	2-7/8 "	R429218X	R429218X[39]	R406532	R4090070[40]	-	-	R458634[52]	R458634
23-123552-004[266]	2-7/8 "	R429218X	R429218X[39]	R406532	R4090070[40]	-	-	R4577512	R4577512
R44141628[269]	2-19/32 "	R42R55245	R42R55245[38]	R402235118	R402238231[201]	-	-	R458634[52]	R458634
R44141629[269]	2-19/32 "	R42R55245	R42R55245[38]	R402235118	R402238231[201]	-	-	R458634[52]	R458634
R44141628[269]	2-7/8 "	R429218X	R429218X[39]	R406532	R4090070[40]	-	-	R458634[52]	R458634
R44141627[270]	2-7/8 "	R429218X	R429218X[39]	R406532	R4090070[40]	-	-	R458634[52]	R458634
R44141628[269]	2-19/32 "	R42R55245	R42R55245[38]	R402235118	R402238231[201]	-	-	R4577512	R4577512
R44141629[269]	2-19/32 "	R42R55245	R42R55245[38]	R402235118	R402238231[201]	-	-	R458634[52]	R458634
R44141608[267]	2-7/8 "	R429218X	R429218X[39]	R406532	R4090070[40]	-	-	R4577512	R4577512
23-123552-004[266]	2-7/8 "	R429218X	R429218X[39]	R406532	R4090070[40]	-	-	R458634[52]	R458634
23-122527-002[272]	2-7/8 "	R429218X	R429218X[39]	R406532	R4090070[40]	-	-	R4577512	R4577512
R44141608[267]	2-7/8 "	R429218X	R429218X[39]	R406532	R4090070[40]	-	-	R4577512	R4577512
23-123572-004[271]	2-19/32 "	R42R55245	R42R55245[38]	R402235118	R402238231[201]	-	-	R4577512	R4577512
23-123572-004[271]	2-19/32 "	R42R55245	R42R55245[38]	R402235118	R402238231[201]	-	-	R4577512	R4577512
R44141628[269]	2-7/8 "	R429218X	R429218X[39]	R406532	R4090070[40]	-	-	R458634[52]	R458634
23-123572-004[271]	2-19/32 "	R42R55245	R42R55245[38]	R402235118	R402238231[201]	-	-	R458634[52]	R458634
R44141629[269]	2-7/8 "	R429218X	R429218X[39]	R406532	R4090070[40]	-	-	R4577512	R4577512
R44141629[269]	2-7/8 "	R429218X	R429218X[39]	R406532	R4090070[40]	-	-	R4577512	R4577512
R44141627[270]	2-19/32 "	R42R55245	R42R55245[38]	R402235118	R402238231[201]	-	-	R458634[52]	R458634
R44141608[267]	2-19/32 "	R42R55245	R42R55245[38]	R402235118	R402238231[201]	-	-	R458634[52]	R458634
R44141628[269]	2-7/8 "	R429218X	R429218X[39]	R406532	R4090070[40]	-	-	R4577512	R4577512
23-123552-004[266]	2-7/8 "	R429218X	R429218X[39]	R406532	R4090070[40]	-	-	R458634[52]	R458634
R44141628[269]	2-7/8 "	R429218X	R429218X[39]	R406532	R4090070[40]	-	-	R4577512	R4577512
R44141608[267]	2-19/32 "	R42R55245	R42R55245[38]	R402235118	R402238231[201]	-	-	R458634[52]	R458634
23-122527-002[272]	2-19/32 "	R42R55245	R42R55245[38]	R402235118	R402238231[201]	-	-	R4577512	R4577512
R44141608[267]	2-7/8 "	R429218X	R429218X[39]	R406532	R4090070[40]	-	-	R458634[52]	R458634

269 - 5 Stud, U Shape

270 - 5 Stud, U Shape, .766 Dia. Studs

271 - 6 Stud, Hat Shape

272 - 6 Stud, U Shape

275 - 5 Stud, U Shape, .656 Dia. Studs

MAKE MODEL YEAR AXLE CODE AXLE WEIGHT	AXLE & BRK. TYPE	BRK. MFG.	BRAKE SIZE	FMSI	MERITOR DISC PAD OR BRAKE SHOE	MERITOR GUIDE PIN OR RETURN SPRING KIT	MERITOR CALIPER HWD. KIT OR RETURN SPRING KIT	MERITOR ADJUSTER KIT (LEFT WHEEL)	MERITOR ADJUSTER KIT (RIGHT WHEEL)
ITE(Cont.)									
170, 1700, 1710, 1723, 1724, 1750, 1753, 1754 SERIES CONVENTIONAL CAB, SCHOOL BUS, TILT CAB(Cont.)									
1986									
	Rd	BX		7108 - D184	MD184	R40H5010	R40H5519	NR	NR
	Rd	BX		7142 - D225	MD225	R40H5010	R40H5522	NR	NR
	Rd	BX		7108 - D184	MD184	R40H5010	R40H5519	NR	NR
	Rd	BX		7142 - D225	MD225	R40H5010	R40H5522	NR	NR
	Rd	BX		7108 - D184	MD184	R40H5010	R40H5519	NR	NR
	Rd	BX		7142 - D225	MD225	R40H5010	R40H5522	NR	NR
	Rd	BX		7142 - D225	MD225	R40H5010	R40H5522	NR	NR
	Rd	BX		7108 - D184	MD184	R40H5010	R40H5519	NR	NR
	Rd	BX		7142 - D225	MD225	R40H5010	R40H5522	NR	NR
	Rd	BX		7142 - D225	MD225	R40H5010	R40H5522	NR	NR
	Rd	BX		7142 - D225	MD225	R40H5010	R40H5522	NR	NR
	Rd	BX		7108 - D184	MD184	R40H5010	R40H5519	NR	NR
	Rd	BX		7108 - D184	MD184	R40H5010	R40H5519	NR	NR
	Rd	BX		7142 - D225	MD225	R40H5010	R40H5522	NR	NR
	Rd	BX		7142 - D225	MD225	R40H5010	R40H5522	NR	NR
	Rd	BX		7142 - D225	MD225	R40H5010	R40H5522	NR	NR
	Rd	BX		7142 - D225	MD225	R40H5010	R40H5522	NR	NR
	Rd	BX		7142 - D225	MD225	R40H5010	R40H5522	NR	NR
	Rd	BX		7108 - D184	MD184	R40H5010	R40H5519	NR	NR
	Rd	BX		7142 - D225	MD225	R40H5010	R40H5522	NR	NR
	Rd	BX		7142 - D225	MD225	R40H5010	R40H5522	NR	NR
	Rd	BX		7108 - D184	MD184	R40H5010	R40H5519	NR	NR
	Rd	BX		7142 - D225	MD225	R40H5010	R40H5522	NR	NR
	Rd	BX		7108 - D184	MD184	R40H5010	R40H5519	NR	NR
S1724, S1754 Conventional	Fd	BX		7108 - D184	MD184	R40H5010	R40H5519	NR	NR
	Fd	BX		7108 - D184	MD184	R40H5010	R40H5519	NR	NR
	Fd	BX		7108 - D184	MD184	R40H5010	R40H5519	NR	NR
	Fd	BX		7108 - D184	MD184	R40H5010	R40H5519	NR	NR
	Fd	BX		7108 - D184	MD184	R40H5010	R40H5519	NR	NR
	Fd	BX		7108 - D184	MD184	R40H5010	R40H5519	NR	NR
	Fd	BX		7108 - D184	MD184	R40H5010	R40H5519	NR	NR
	Fd	BX		7108 - D184	MD184	R40H5010	R40H5519	NR	NR
	Fd	BX		7108 - D184	MD184	R40H5010	R40H5519	NR	NR
	Fd	BX		7108 - D184	MD184	R40H5010	R40H5519	NR	NR
S1724, S1754 Conventional FA101	Fd	BX		7108 - D184	MD184	R40H5010	R40H5519	NR	NR
	Fd	BX		7108 - D184	MD184	R40H5010	R40H5519	NR	NR
	Fd	BX		7108 - D184	MD184	R40H5010	R40H5519	NR	NR
	Fd	BX		7108 - D184	MD184	R40H5010	R40H5519	NR	NR
	Fd	BX		7108 - D184	MD184	R40H5010	R40H5519	NR	NR
	Fd	BX		7108 - D184	MD184	R40H5010	R40H5519	NR	NR
S1724, S1754 Conventional FA309, 329, 339	Fd	BX		7142 - D225	MD225	R40H5010	R40H5522	NR	NR
	Fd	BX		7142 - D225	MD225	R40H5010	R40H5522	NR	NR
	Fd	BX		7142 - D225	MD225	R40H5010	R40H5522	NR	NR
	Fd	BX		7142 - D225	MD225	R40H5010	R40H5522	NR	NR
	Fd	BX		7142 - D225	MD225	R40H5010	R40H5522	NR	NR
	Fd	BX		7142 - D225	MD225	R40H5010	R40H5522	NR	NR
	Fd	BX		7142 - D225	MD225	R40H5010	R40H5522	NR	NR
	Fd	BX		7142 - D225	MD225	R40H5010	R40H5522	NR	NR
	Fd	BX		7142 - D225	MD225	R40H5010	R40H5522	NR	NR
	Fd	BX		7142 - D225	MD225	R40H5010	R40H5522	NR	NR
	Fd	BX		7142 - D225	MD225	R40H5010	R40H5522	NR	NR
	Fd	BX		7142 - D225	MD225	R40H5010	R40H5522	NR	NR
	Fd	BX		7142 - D225	MD225	R40H5010	R40H5522	NR	NR
	Fd	BX		7142 - D225	MD225	R40H5010	R40H5522	NR	NR
	Fd	BX		7142 - D225	MD225	R40H5010	R40H5522	NR	NR
	Fd	BX		7142 - D225	MD225	R40H5010	R40H5522	NR	NR
	Fd	BX		7142 - D225	MD225	R40H5010	R40H5522	NR	NR
	Fd	BX		7142 - D225	MD225	R40H5010	R40H5522	NR	NR
	Fd	BX		7142 - D225	MD225	R40H5010	R40H5522	NR	NR
	Fd	BX		7142 - D225	MD225	R40H5010	R40H5522	NR	NR
	Fd	BX		7142 - D225	MD225	R40H5010	R40H5522	NR	NR
	Fd	BX		7142 - D225	MD225	R40H5010	R40H5522	NR	NR
	Fd	BX		7142 - D225	MD225	R40H5010	R40H5522	NR	NR
	Fd	BX		7142 - D225	MD225	R40H5010	R40H5522	NR	NR
	Fd	BX		7142 - D225	MD225	R40H5010	R40H5522	NR	NR

37 - Also available as a New unit

38 - First design, may have external joining tube and uses steel pistons

39 - First design, uses steel pistons.

40 - For chrome plated steel version, use R4090070P

52 - 18" Length

201 - Steel Piston

266 - 10 Stud, Hat Shaped

267 - 10 Stud, U Shaped

268 - 5 Stud, Hat Shape

MERITOR DRUM OR ROTOR NO.	CALIPER OR CYLINDER BORE SIZE	MERITOR CALIPER OR WHEEL CYLINDER (LEFT)	MERITOR CALIPER OR WHEEL CYLINDER (RIGHT)	MERITOR CALIPER OR WHEEL CYLINDER REPAIR KIT	MERITOR CALIPER PISTON	MERITOR MASTER CYLINDER	MERITOR MASTER CYLINDER KIT	MERITOR BRAKE HOSE (LEFT)	MERITOR BRAKE HOSE (RIGHT)
									ITE(Cont.)
170, 1700, 1710, 1723, 1724, 1750, 1753, 1754 SERIES CONVENTIONAL CAB, SCHOOL BUS, TILT CAB(Cont.)									
23-123572-004[271]	2-19/32 "	R42R55245	R42R55245[38]	R402235118	R402238231[201]	-	-	R458634[52]	R458634
23-123552-004[266]	2-7/8 "	R429218X	R429218X[39]	R406532	R4090070[40]	-	-	R4577512	R4577512
R44141608[267]	2-19/32 "	R42R55245	R42R55245[38]	R402235118	R402238231[201]	-	-	R4577512	R4577512
R44141608[267]	2-7/8 "	R429218X	R429218X[39]	R406532	R4090070[40]	-	-	R458634[52]	R458634
23-123552-004[266]	2-19/32 "	R42R55245	R42R55245[38]	R402235118	R402238231[201]	-	-	R4577512	R4577512
R44141629[269]	2-7/8 "	R429218X	R429218X[39]	R406532	R4090070[40]	-	-	R458634[52]	R458634
R44141627[270]	2-7/8 "	R429218X	R429218X[39]	R406532	R4090070[40]	-	-	R4577512	R4577512
23-123552-004[266]	2-19/32 "	R42R55245	R42R55245[38]	R402235118	R402238231[201]	-	-	R4577512	R4577512
R44141627[270]	2-7/8 "	R429218X	R429218X[39]	R406532	R4090070[40]	-	-	R4577512	R4577512
23-122527-002[272]	2-7/8 "	R429218X	R429218X[39]	R406532	R4090070[40]	-	-	R4577512	R4577512
23-123572-004[271]	2-7/8 "	R429218X	R429218X[39]	R406532	R4090070[40]	-	-	R4577512	R4577512
R44141629[269]	2-19/32 "	R42R55245	R42R55245[38]	R402235118	R402238231[201]	-	-	R4577512	R4577512
R44141608[267]	2-19/32 "	R42R55245	R42R55245[38]	R402235118	R402238231[201]	-	-	R4577512	R4577512
23-123572-004[271]	2-7/8 "	R429218X	R429218X[39]	R406532	R4090070[40]	-	-	R4577512	R4577512
R44141608[267]	2-7/8 "	R429218X	R429218X[39]	R406532	R4090070[40]	-	-	R458634[52]	R458634
R44141629[269]	2-7/8 "	R429218X	R429218X[39]	R406532	R4090070[40]	-	-	R458634[52]	R458634
R44141627[270]	2-7/8 "	R429218X	R429218X[39]	R406532	R4090070[40]	-	-	R4577512	R4577512
23-123552-004[266]	2-7/8 "	R429218X	R429218X[39]	R406532	R4090070[40]	-	-	R4577512	R4577512
R44141627[270]	2-19/32 "	R42R55245	R42R55245[38]	R402235118	R402238231[201]	-	-	R4577512	R4577512
23-123572-004[271]	2-7/8 "	R429218X	R429218X[39]	R406532	R4090070[40]	-	-	R4577512	R4577512
R44141629[269]	2-7/8 "	R429218X	R429218X[39]	R406532	R4090070[40]	-	-	R458634[52]	R458634
R44141629[269]	2-19/32 "	R42R55245	R42R55245[38]	R402235118	R402238231[201]	-	-	R4577512	R4577512
23-123552-004[266]	2-7/8 "	R429218X	R429218X[39]	R406532	R4090070[40]	-	-	R458634[52]	R458634
23-122527-002[272]	2-19/32 "	R42R55245	R42R55245[38]	R402235118	R402238231[201]	-	-	R458634[52]	R458634
23-123552-004[266]	3-3/8 "	R42R55099	R42R55098[37]	R4066780	R4090021[201]	-	-	-	-
R44141476[268]	3-3/8 "	R42R55099	R42R55098[37]	R4066780	R4090021[201]	-	-	-	-
23-123552-004[266]	3-3/8 "	R42R55099	R42R55098[37]	R4066780	R4090021[201]	-	-	-	-
R44141858[275]	3-3/8 "	R42R55099	R42R55098[37]	R4066780	R4090021[201]	-	-	-	-
R44141476[268]	3-3/8 "	R42R55099	R42R55098[37]	R4066780	R4090021[201]	-	-	-	-
23-122920-002[273]	3-3/8 "	R42R55099	R42R55098[37]	R4066780	R4090021[201]	-	-	-	-
R44141858[275]	3-3/8 "	R42R55099	R42R55098[37]	R4066780	R4090021[201]	-	-	-	-
23-122920-002[273]	3-3/8 "	R42R55099	R42R55098[37]	R4066780	R4090021[201]	-	-	-	-
23-123572-004[271]	3-3/8 "	R42R55099	R42R55098[37]	R4066780	R4090021[201]	-	-	-	-
23-123572-004[271]	3-3/8 "	R42R55099	R42R55098[37]	R4066780	R4090021[201]	-	-	-	-
R44141476[268]	2-19/32 "	R42R55245	R42R55245[38]	R402235118	R402238231[201]	-	-	-	-
23-123572-004[271]	2-19/32 "	R42R55245	R42R55245[38]	R402235118	R402238231[201]	-	-	-	-
R44141858[275]	2-19/32 "	R42R55245	R42R55245[38]	R402235118	R402238231[201]	-	-	-	-
23-123552-004[266]	2-19/32 "	R42R55245	R42R55245[38]	R402235118	R402238231[201]	-	-	-	-
23-122920-002[273]	2-19/32 "	R42R55245	R42R55245[38]	R402235118	R402238231[201]	-	-	-	-
23-122527-002[272]	2-19/32 "	R42R55245	R42R55245[38]	R402235118	R402238231[201]	-	-	-	-
23-123552-004[266]	2-7/8 "	R429218X	R429218X[39]	R406532	R4090070[40]	-	-	-	-
23-122527-002[272]	2-7/8 "	R429218X	R429218X[39]	R406532	R4090070[40]	-	-	-	-
23-123552-004[266]	2-7/8 "	R429218X	R429218X[39]	R406532	R4090070[40]	-	-	-	-
23-122527-002[272]	2-7/8 "	R429218X	R429218X[39]	R406532	R4090070[40]	-	-	-	-
23-123552-004[266]	2-7/8 "	R429218X	R429218X[39]	R406532	R4090070[40]	-	-	-	-
R44141476[268]	2-7/8 "	R429218X	R429218X[39]	R406532	R4090070[40]	-	-	-	-
23-123572-004[271]	2-7/8 "	R429218X	R429218X[39]	R406532	R4090070[40]	-	-	-	-
23-122920-002[273]	2-7/8 "	R429218X	R429218X[39]	R406532	R4090070[40]	-	-	-	-
23-123572-004[271]	2-7/8 "	R429218X	R429218X[39]	R406532	R4090070[40]	-	-	-	-
23-122527-002[272]	2-7/8 "	R429218X	R429218X[39]	R406532	R4090070[40]	-	-	-	-
R44141858[275]	2-7/8 "	R429218X	R429218X[39]	R406532	R4090070[40]	-	-	-	-
23-123572-004[271]	2-7/8 "	R429218X	R429218X[39]	R406532	R4090070[40]	-	-	-	-
R44141476[268]	2-7/8 "	R429218X	R429218X[39]	R406532	R4090070[40]	-	-	-	-
23-122920-002[273]	2-7/8 "	R429218X	R429218X[39]	R406532	R4090070[40]	-	-	-	-
R44141476[268]	2-7/8 "	R429218X	R429218X[39]	R406532	R4090070[40]	-	-	-	-
23-123572-004[271]	2-7/8 "	R429218X	R429218X[39]	R406532	R4090070[40]	-	-	-	-
23-122527-002[272]	2-7/8 "	R429218X	R429218X[39]	R406532	R4090070[40]	-	-	-	-
23-123572-004[271]	2-7/8 "	R429218X	R429218X[39]	R406532	R4090070[40]	-	-	-	-
23-123552-004[266]	2-7/8 "	R429218X	R429218X[39]	R406532	R4090070[40]	-	-	-	-
23-123552-004[266]	2-7/8 "	R429218X	R429218X[39]	R406532	R4090070[40]	-	-	-	-
R44141476[268]	2-7/8 "	R429218X	R429218X[39]	R406532	R4090070[40]	-	-	-	-

269 - 5 Stud, U Shape

270 - 5 Stud, U Shape, .766 Dia. Studs

271 - 6 Stud, Hat Shape

272 - 6 Stud, U Shape

273 - 5 Stud, U Shape, .780 Dia. Studs

275 - 5 Stud, U Shape, .656 Dia. Studs

MAKE MODEL YEAR AXLE CODE AXLE WEIGHT	AXLE & BRK. TYPE	BRK. MFG.	BRAKE SIZE	FMSI	MERITOR DISC PAD OR BRAKE SHOE	MERITOR GUIDE PIN OR RETURN SPRING KIT	MERITOR CALIPER HWD. KIT OR RETURN SPRING KIT	MERITOR ADJUSTER KIT (LEFT WHEEL)	MERITOR ADJUSTER KIT (RIGHT WHEEL)
ITE(Cont.)									
170, 1700, 1710, 1723, 1724, 1750, 1753, 1754 SERIES CONVENTIONAL CAB, SCHOOL BUS, TILT CAB(Cont.)									
1986									
	Fd	BX		7142 - D225	MD225	R40H5010	R40H5522	NR	NR
	Fd	BX		7142 - D225	MD225	R40H5010	R40H5522	NR	NR
	Fd	BX		7142 - D225	MD225	R40H5010	R40H5522	NR	NR
	Fd	BX		7142 - D225	MD225	R40H5010	R40H5522	NR	NR
	Fd	BX		7142 - D225	MD225	R40H5010	R40H5522	NR	NR
	Fd	BX		7142 - D225	MD225	R40H5010	R40H5522	NR	NR
	Fd	BX		7142 - D225	MD225	R40H5010	R40H5522	NR	NR
	Fd	BX		7142 - D225	MD225	R40H5010	R40H5522	NR	NR
	Fd	BX		7142 - D225	MD225	R40H5010	R40H5522	NR	NR
	Fd	BX		7142 - D225	MD225	R40H5010	R40H5522	NR	NR
	Fd	BX		7142 - D225	MD225	R40H5010	R40H5522	NR	NR
	Fd	BX		7142 - D225	MD225	R40H5010	R40H5522	NR	NR
	Fd	BX		7142 - D225	MD225	R40H5010	R40H5522	NR	NR
	Fd	BX		7142 - D225	MD225	R40H5010	R40H5522	NR	NR
S1724, S1754 Conventional FA73	Fd	BX		7108 - D184	MD184	R40H5010	R40H5519	NR	NR
	Fd	BX		7108 - D184	MD184	R40H5010	R40H5519	NR	NR
S1724, S1754 Conventional RA29, 30, 42, 44	Rd	BX		7142 - D225	MD225	R40H5010	R40H5522	NR	NR
	Rd	BX		7142 - D225	MD225	R40H5010	R40H5522	NR	NR
	Rd	BX		7108 - D184	MD184	R40H5010	R40H5519	NR	NR
	Rd	BX		7142 - D225	MD225	R40H5010	R40H5522	NR	NR
	Rd	BX		7142 - D225	MD225	R40H5010	R40H5522	NR	NR
	Rd	BX		7142 - D225	MD225	R40H5010	R40H5522	NR	NR
	Rd	BX		7108 - D184	MD184	R40H5010	R40H5519	NR	NR
	Rd	BX		7142 - D225	MD225	R40H5010	R40H5522	NR	NR
	Rd	BX		7108 - D184	MD184	R40H5010	R40H5519	NR	NR
	Rd	BX		7142 - D225	MD225	R40H5010	R40H5522	NR	NR
	Rd	BX		7142 - D225	MD225	R40H5010	R40H5522	NR	NR
	Rd	BX		7142 - D225	MD225	R40H5010	R40H5522	NR	NR
	Rd	BX		7108 - D184	MD184	R40H5010	R40H5519	NR	NR
	Rd	BX		7142 - D225	MD225	R40H5010	R40H5522	NR	NR
	Rd	BX		7142 - D225	MD225	R40H5010	R40H5522	NR	NR
	Rd	BX		7108 - D184	MD184	R40H5010	R40H5519	NR	NR
	Rd	BX		7142 - D225	MD225	R40H5010	R40H5522	NR	NR
	Rd	BX		7108 - D184	MD184	R40H5010	R40H5519	NR	NR
	Rd	BX		7108 - D184	MD184	R40H5010	R40H5519	NR	NR
	Rd	BX		7142 - D225	MD225	R40H5010	R40H5522	NR	NR
	Rd	BX		7108 - D184	MD184	R40H5010	R40H5519	NR	NR
	Rd	BX		7142 - D225	MD225	R40H5010	R40H5522	NR	NR
	Rd	BX		7142 - D225	MD225	R40H5010	R40H5522	NR	NR
	Rd	BX		7142 - D225	MD225	R40H5010	R40H5522	NR	NR
	Rd	BX		7142 - D225	MD225	R40H5010	R40H5522	NR	NR
	Rd	BX		7108 - D184	MD184	R40H5010	R40H5519	NR	NR
	Rd	BX		7108 - D184	MD184	R40H5010	R40H5519	NR	NR
	Rd	BX		7142 - D225	MD225	R40H5010	R40H5522	NR	NR
	Rd	BX		7142 - D225	MD225	R40H5010	R40H5522	NR	NR
	Rd	BX		7142 - D225	MD225	R40H5010	R40H5522	NR	NR
	Rd	BX		7108 - D184	MD184	R40H5010	R40H5519	NR	NR
	Rd	BX		7108 - D184	MD184	R40H5010	R40H5519	NR	NR
	Rd	BX		7142 - D225	MD225	R40H5010	R40H5522	NR	NR
1985 C1710, C1750 Cargostar Tilt Cab FA101	Fd	BX		7108 - D184	MD184	R40H5010	R40H5519	NR	NR
	Fd	BX		7108 - D184	MD184	R40H5010	R40H5519	NR	NR
	Fd	BX		7108 - D184	MD184	R40H5010	R40H5519	NR	NR
	Fd	BX		7108 - D184	MD184	R40H5010	R40H5519	NR	NR
	Fd	BX		7108 - D184	MD184	R40H5010	R40H5519	NR	NR
	Fd	BX		7108 - D184	MD184	R40H5010	R40H5519	NR	NR
C1710, C1750 Cargostar Tilt Cab FA309, 329, 339	Fd	BX		7142 - D225	MD225	R40H5010	R40H5522	NR	NR

37 - Also available as a New unit

38 - First design, may have external joining tube and uses steel pistons

39 - First design, uses steel pistons.

40 - For chrome plated steel version, use R4090070P

53 - Power Brakes

201 - Steel Piston

266 - 10 Stud, Hat Shaped

267 - 10 Stud, U Shaped

268 - 5 Stud, Hat Shape

MERITOR DRUM OR ROTOR NO.	CALIPER OR CYLINDER BORE SIZE	MERITOR CALIPER OR WHEEL CYLINDER (LEFT)	MERITOR CALIPER OR WHEEL CYLINDER (RIGHT)	MERITOR CALIPER OR WHEEL CYLINDER REPAIR KIT	MERITOR CALIPER PISTON	MERITOR MASTER CYLINDER	MERITOR MASTER CYLINDER KIT	MERITOR BRAKE HOSE (LEFT)	MERITOR BRAKE HOSE (RIGHT)
									ITE(Cont.)
170, 1700, 1710, 1723, 1724, 1750, 1753, 1754 SERIES CONVENTIONAL CAB, SCHOOL BUS, TILT CAB(Cont.)									
R44141858[275]	2-7/8 "	R429218X	R429218X[39]	R406532	R4090070[40]	-	-	-	-
R44141858[275]	2-7/8 "	R429218X	R429218X[39]	R406532	R4090070[40]	-	-	-	-
23-122920-002[273]	2-7/8 "	R429218X	R429218X[39]	R406532	R4090070[40]	-	-	-	-
23-122920-002[273]	2-7/8 "	R429218X	R429218X[39]	R406532	R4090070[40]	-	-	-	-
23-123572-004[271]	2-7/8 "	R429218X	R429218X[39]	R406532	R4090070[40]	-	-	-	-
R44141476[268]	2-7/8 "	R429218X	R429218X[39]	R406532	R4090070[40]	-	-	-	-
23-122527-002[272]	2-7/8 "	R429218X	R429218X[39]	R406532	R4090070[40]	-	-	-	-
R44141858[275]	2-7/8 "	R429218X	R429218X[39]	R406532	R4090070[40]	-	-	-	-
23-122920-002[273]	2-7/8 "	R429218X	R429218X[39]	R406532	R4090070[40]	-	-	-	-
R44141858[275]	2-7/8 "	R429218X	R429218X[39]	R406532	R4090070[40]	-	-	-	-
R44141858[275]	2-7/8 "	R429218X	R429218X[39]	R406532	R4090070[40]	-	-	-	-
R44141476[268]	2-7/8 "	R429218X	R429218X[39]	R406532	R4090070[40]	-	-	-	-
23-123552-004[266]	2-7/8 "	R429218X	R429218X[39]	R406532	R4090070[40]	-	-	-	-
23-122527-002[272]	2-7/8 "	R429218X	R429218X[39]	R406532	R4090070[40]	-	-	-	-
23-122527-002[272]	3-3/8 "	R42R55099	R42R55098[37]	R4066780	R4090021[201]	-	-	-	-
23-122527-002[272]	3-3/8 "	R42R55099	R42R55098[37]	R4066780	R4090021[201]	-	-	-	-
R44141608[267]	2-7/8 "	R429218X	R429218X[39]	R406532	R4090070[40]	-	-	-	-
23-122527-002[272]	2-7/8 "	R429218X	R429218X[39]	R406532	R4090070[40]	-	-	-	-
R44141628[269]	2-19/32 "	R42R55245	R42R55245[38]	R402235118	R402238231[201]	-	-	-	-
R44141608[267]	2-7/8 "	R429218X	R429218X[39]	R406532	R4090070[40]	-	-	-	-
R44141628[269]	2-7/8 "	R429218X	R429218X[39]	R406532	R4090070[40]	-	-	-	-
R44141627[270]	2-7/8 "	R429218X	R429218X[39]	R406532	R4090070[40]	-	-	-	-
23-123572-004[271]	2-19/32 "	R42R55245	R42R55245[38]	R402235118	R402238231[201]	-	-	-	-
R44141627[270]	2-7/8 "	R429218X	R429218X[39]	R406532	R4090070[40]	-	-	-	-
23-123552-004[266]	2-19/32 "	R42R55245	R42R55245[38]	R402235118	R402238231[201]	-	-	-	-
R44141628[269]	2-7/8 "	R429218X	R429218X[39]	R406532	R4090070[40]	-	-	-	-
R44141627[270]	2-7/8 "	R429218X	R429218X[39]	R406532	R4090070[40]	-	-	-	-
23-122527-002[272]	2-7/8 "	R429218X	R429218X[39]	R406532	R4090070[40]	-	-	-	-
R44141628[269]	2-19/32 "	R42R55245	R42R55245[38]	R402235118	R402238231[201]	-	-	-	-
R44141629[269]	2-7/8 "	R429218X	R429218X[39]	R406532	R4090070[40]	-	-	-	-
R44141608[267]	2-7/8 "	R429218X	R429218X[39]	R406532	R4090070[40]	-	-	-	-
R44141627[270]	2-19/32 "	R42R55245	R42R55245[38]	R402235118	R402238231[201]	-	-	-	-
23-122527-002[272]	2-7/8 "	R429218X	R429218X[39]	R406532	R4090070[40]	-	-	-	-
23-123572-004[271]	2-19/32 "	R42R55245	R42R55245[38]	R402235118	R402238231[201]	-	-	-	-
R44141608[267]	2-19/32 "	R42R55245	R42R55245[38]	R402235118	R402238231[201]	-	-	-	-
23-123552-004[266]	2-7/8 "	R429218X	R429218X[39]	R406532	R4090070[40]	-	-	-	-
R44141608[267]	2-19/32 "	R42R55245	R42R55245[38]	R402235118	R402238231[201]	-	-	-	-
23-123552-004[266]	2-7/8 "	R429218X	R429218X[39]	R406532	R4090070[40]	-	-	-	-
R44141628[269]	2-7/8 "	R429218X	R429218X[39]	R406532	R4090070[40]	-	-	-	-
23-123572-004[271]	2-7/8 "	R429218X	R429218X[39]	R406532	R4090070[40]	-	-	-	-
23-123572-004[271]	2-7/8 "	R429218X	R429218X[39]	R406532	R4090070[40]	-	-	-	-
R44141629[269]	2-19/32 "	R42R55245	R42R55245[38]	R402235118	R402238231[201]	-	-	-	-
23-123552-004[266]	2-19/32 "	R42R55245	R42R55245[38]	R402235118	R402238231[201]	-	-	-	-
23-123572-004[271]	2-7/8 "	R429218X	R429218X[39]	R406532	R4090070[40]	-	-	-	-
23-123552-004[266]	2-7/8 "	R429218X	R429218X[39]	R406532	R4090070[40]	-	-	-	-
R44141629[269]	2-7/8 "	R429218X	R429218X[39]	R406532	R4090070[40]	-	-	-	-
23-122527-002[272]	2-19/32 "	R42R55245	R42R55245[38]	R402235118	R402238231[201]	-	-	-	-
R44141629[269]	2-19/32 "	R42R55245	R42R55245[38]	R402235118	R402238231[201]	-	-	-	-
R44141629[269]	2-7/8 "	R429218X	R429218X[39]	R406532	R4090070[40]	-	-	-	-
R44141476[268]	2-19/32 "	R42R55245	R42R55245[38]	R402235118	R402238231[201]	N/A[53]	-	-	-
23-123572-004[271]	2-19/32 "	R42R55245	R42R55245[38]	R402235118	R402238231[201]	N/A[53]	-	-	-
R44141858[275]	2-19/32 "	R42R55245	R42R55245[38]	R402235118	R402238231[201]	N/A[53]	-	-	-
23-122527-002[272]	2-19/32 "	R42R55245	R42R55245[38]	R402235118	R402238231[201]	N/A[53]	-	-	-
23-122920-002[273]	2-19/32 "	R42R55245	R42R55245[38]	R402235118	R402238231[201]	N/A[53]	-	-	-
23-123552-004[266]	2-19/32 "	R42R55245	R42R55245[38]	R402235118	R402238231[201]	N/A[53]	-	-	-
R44141858[275]	2-7/8 "	R429218X	R429218X[39]	R406532	R4090070[40]	N/A[53]	-	-	-

269 - 5 Stud, U Shape

270 - 5 Stud, U Shape, .766 Dia. Studs

271 - 6 Stud, Hat Shape

272 - 6 Stud, U Shape

273 - 5 Stud, U Shape, .780 Dia. Studs

275 - 5 Stud, U Shape, .656 Dia. Studs

MAKE MODEL YEAR AXLE CODE AXLE WEIGHT	AXLE & BRK. TYPE	BRK. MFG.	BRAKE SIZE	FMSI	MERITOR DISC PAD OR BRAKE SHOE	MERITOR GUIDE PIN OR RETURN SPRING KIT	MERITOR CALIPER HWD. KIT OR RETURN SPRING KIT	MERITOR ADJUSTER KIT (LEFT WHEEL)	MERITOR ADJUSTER KIT (RIGHT WHEEL)
ITE(Cont.)									
170, 1700, 1710, 1723, 1724, 1750, 1753, 1754 SERIES CONVENTIONAL CAB, SCHOOL BUS, TILT CAB(Cont.)									
1985									
	Fd	BX		7142 - D225	MD225	R40H5010	R40H5522	NR	NR
	Fd	BX		7142 - D225	MD225	R40H5010	R40H5522	NR	NR
	Fd	BX		7142 - D225	MD225	R40H5010	R40H5522	NR	NR
	Fd	BX		7142 - D225	MD225	R40H5010	R40H5522	NR	NR
	Fd	BX		7142 - D225	MD225	R40H5010	R40H5522	NR	NR
	Fd	BX		7142 - D225	MD225	R40H5010	R40H5522	NR	NR
	Fd	BX		7142 - D225	MD225	R40H5010	R40H5522	NR	NR
	Fd	BX		7142 - D225	MD225	R40H5010	R40H5522	NR	NR
	Fd	BX		7142 - D225	MD225	R40H5010	R40H5522	NR	NR
	Fd	BX		7142 - D225	MD225	R40H5010	R40H5522	NR	NR
	Fd	BX		7142 - D225	MD225	R40H5010	R40H5522	NR	NR
	Fd	BX		7142 - D225	MD225	R40H5010	R40H5522	NR	NR
	Fd	BX		7142 - D225	MD225	R40H5010	R40H5522	NR	NR
	Fd	BX		7142 - D225	MD225	R40H5010	R40H5522	NR	NR
	Fd	BX		7142 - D225	MD225	R40H5010	R40H5522	NR	NR
	Fd	BX		7142 - D225	MD225	R40H5010	R40H5522	NR	NR
	Fd	BX		7142 - D225	MD225	R40H5010	R40H5522	NR	NR
	Fd	BX		7142 - D225	MD225	R40H5010	R40H5522	NR	NR
	Fd	BX		7142 - D225	MD225	R40H5010	R40H5522	NR	NR
	Fd	BX		7142 - D225	MD225	R40H5010	R40H5522	NR	NR
	Fd	BX		7142 - D225	MD225	R40H5010	R40H5522	NR	NR
	Fd	BX		7142 - D225	MD225	R40H5010	R40H5522	NR	NR
	Fd	BX		7142 - D225	MD225	R40H5010	R40H5522	NR	NR
	Fd	BX		7142 - D225	MD225	R40H5010	R40H5522	NR	NR
	Fd	BX		7142 - D225	MD225	R40H5010	R40H5522	NR	NR
	Fd	BX		7142 - D225	MD225	R40H5010	R40H5522	NR	NR
	Fd	BX		7142 - D225	MD225	R40H5010	R40H5522	NR	NR
	Fd	BX		7142 - D225	MD225	R40H5010	R40H5522	NR	NR
	Fd	BX		7142 - D225	MD225	R40H5010	R40H5522	NR	NR
	Fd	BX		7142 - D225	MD225	R40H5010	R40H5522	NR	NR
	Fd	BX		7142 - D225	MD225	R40H5010	R40H5522	NR	NR
	Fd	BX		7142 - D225	MD225	R40H5010	R40H5522	NR	NR
	Fd	BX		7142 - D225	MD225	R40H5010	R40H5522	NR	NR
	Fd	BX		7142 - D225	MD225	R40H5010	R40H5522	NR	NR
	Fd	BX		7142 - D225	MD225	R40H5010	R40H5522	NR	NR
C1710, C1750 Cargostar Tilt Cab									
RA29, 30, 42, 44	Rd	BX		7108 - D184	MD184	R40H5010	R40H5519	NR	NR
	Rd	BX		7108 - D184	MD184	R40H5010	R40H5519	NR	NR
	Rd	BX		7108 - D184	MD184	R40H5010	R40H5519	NR	NR
	Rd	BX		7108 - D184	MD184	R40H5010	R40H5519	NR	NR
	Rd	BX		7108 - D184	MD184	R40H5010	R40H5519	NR	NR
	Rd	BX		7142 - D225	MD225	R40H5010	R40H5522	NR	NR
	Rd	BX		7142 - D225	MD225	R40H5010	R40H5522	NR	NR
	Rd	BX		7142 - D225	MD225	R40H5010	R40H5522	NR	NR
	Rd	BX		7142 - D225	MD225	R40H5010	R40H5522	NR	NR
	Rd	BX		7142 - D225	MD225	R40H5010	R40H5522	NR	NR
	Rd	BX		7142 - D225	MD225	R40H5010	R40H5522	NR	NR
	Rd	BX		7142 - D225	MD225	R40H5010	R40H5522	NR	NR
	Rd	BX		7142 - D225	MD225	R40H5010	R40H5522	NR	NR
	Rd	BX		7142 - D225	MD225	R40H5010	R40H5522	NR	NR
	Rd	BX		7142 - D225	MD225	R40H5010	R40H5522	NR	NR
	Rd	BX		7142 - D225	MD225	R40H5010	R40H5522	NR	NR
	Rd	BX		7142 - D225	MD225	R40H5010	R40H5522	NR	NR
	Rd	BX		7108 - D184	MD184	R40H5010	R40H5519	NR	NR
	Rd	BX		7108 - D184	MD184	R40H5010	R40H5519	NR	NR
	Rd	BX		7142 - D225	MD225	R40H5010	R40H5522	NR	NR
	Rd	BX		7108 - D184	MD184	R40H5010	R40H5519	NR	NR
	Rd	BX		7142 - D225	MD225	R40H5010	R40H5522	NR	NR
	Rd	BX		7108 - D184	MD184	R40H5010	R40H5519	NR	NR
	Rd	BX		7142 - D225	MD225	R40H5010	R40H5522	NR	NR
	Rd	BX		7142 - D225	MD225	R40H5010	R40H5522	NR	NR
	Rd	BX		7142 - D225	MD225	R40H5010	R40H5522	NR	NR
	Rd	BX		7142 - D225	MD225	R40H5010	R40H5522	NR	NR
	Rd	BX		7108 - D184	MD184	R40H5010	R40H5519	NR	NR

38 - First design, may have external joining tube and uses steel pistons
39 - First design, uses steel pistons.
40 - For chrome plated steel version, use R4090070P
53 - Power Brakes
201 - Steel Piston
266 - 10 Stud, Hat Shaped
267 - 10 Stud, U Shaped
268 - 5 Stud, Hat Shape
269 - 5 Stud, U Shape

MERITOR DRUM OR ROTOR NO.	CALIPER OR CYLINDER BORE SIZE	MERITOR CALIPER OR WHEEL CYLINDER (LEFT)	MERITOR CALIPER OR WHEEL CYLINDER (RIGHT)	MERITOR CALIPER OR WHEEL CYLINDER REPAIR KIT	MERITOR CALIPER PISTON	MERITOR MASTER CYLINDER	MERITOR MASTER CYLINDER KIT	MERITOR BRAKE HOSE (LEFT)	MERITOR BRAKE HOSE (RIGHT)
ITE(Cont.)									
170, 1700, 1710, 1723, 1724, 1750, 1753, 1754 SERIES CONVENTIONAL CAB, SCHOOL BUS, TILT CAB(Cont.)									
23-123552-004[266]	2-7/8 "	R429218X	R429218X[39]	R406532	R4090070[40]	N/A[53]	-	-	-
23-122920-002[273]	2-7/8 "	R429218X	R429218X[39]	R406532	R4090070[40]	N/A[53]	-	-	-
23-123552-004[266]	2-7/8 "	R429218X	R429218X[39]	R406532	R4090070[40]	N/A[53]	-	-	-
23-123572-004[271]	2-7/8 "	R429218X	R429218X[39]	R406532	R4090070[40]	N/A[53]	-	-	-
R44141858[275]	2-7/8 "	R429218X	R429218X[39]	R406532	R4090070[40]	N/A[53]	-	-	-
23-122920-002[273]	2-7/8 "	R429218X	R429218X[39]	R406532	R4090070[40]	N/A[53]	-	-	-
23-122920-002[273]	2-7/8 "	R429218X	R429218X[39]	R406532	R4090070[40]	N/A[53]	-	-	-
23-122527-002[272]	2-7/8 "	R429218X	R429218X[39]	R406532	R4090070[40]	N/A[53]	-	-	-
23-122920-002[273]	2-7/8 "	R429218X	R429218X[39]	R406532	R4090070[40]	N/A[53]	-	-	-
23-123572-004[271]	2-7/8 "	R429218X	R429218X[39]	R406532	R4090070[40]	N/A[53]	-	-	-
R44141476[268]	2-7/8 "	R429218X	R429218X[39]	R406532	R4090070[40]	N/A[53]	-	-	-
23-122920-002[273]	2-7/8 "	R429218X	R429218X[39]	R406532	R4090070[40]	N/A[53]	-	-	-
23-123552-004[266]	2-7/8 "	R429218X	R429218X[39]	R406532	R4090070[40]	N/A[53]	-	-	-
R44141476[268]	2-7/8 "	R429218X	R429218X[39]	R406532	R4090070[40]	N/A[53]	-	-	-
R44141858[275]	2-7/8 "	R429218X	R429218X[39]	R406532	R4090070[40]	N/A[53]	-	-	-
R44141476[268]	2-7/8 "	R429218X	R429218X[39]	R406532	R4090070[40]	N/A[53]	-	-	-
R44141858[275]	2-7/8 "	R429218X	R429218X[39]	R406532	R4090070[40]	N/A[53]	-	-	-
23-123572-004[271]	2-7/8 "	R429218X	R429218X[39]	R406532	R4090070[40]	N/A[53]	-	-	-
23-122527-002[272]	2-7/8 "	R429218X	R429218X[39]	R406532	R4090070[40]	N/A[53]	-	-	-
23-123552-004[266]	2-7/8 "	R429218X	R429218X[39]	R406532	R4090070[40]	N/A[53]	-	-	-
R44141858[275]	2-7/8 "	R429218X	R429218X[39]	R406532	R4090070[40]	N/A[53]	-	-	-
R44141476[268]	2-7/8 "	R429218X	R429218X[39]	R406532	R4090070[40]	N/A[53]	-	-	-
23-123552-004[266]	2-7/8 "	R429218X	R429218X[39]	R406532	R4090070[40]	N/A[53]	-	-	-
23-123552-004[266]	2-7/8 "	R429218X	R429218X[39]	R406532	R4090070[40]	N/A[53]	-	-	-
23-122527-002[272]	2-7/8 "	R429218X	R429218X[39]	R406532	R4090070[40]	N/A[53]	-	-	-
23-122527-002[272]	2-7/8 "	R429218X	R429218X[39]	R406532	R4090070[40]	N/A[53]	-	-	-
23-122527-002[272]	2-7/8 "	R429218X	R429218X[39]	R406532	R4090070[40]	N/A[53]	-	-	-
R44141476[268]	2-7/8 "	R429218X	R429218X[39]	R406532	R4090070[40]	N/A[53]	-	-	-
23-123572-004[271]	2-7/8 "	R429218X	R429218X[39]	R406532	R4090070[40]	N/A[53]	-	-	-
R44141858[275]	2-7/8 "	R429218X	R429218X[39]	R406532	R4090070[40]	N/A[53]	-	-	-
R44141476[268]	2-7/8 "	R429218X	R429218X[39]	R406532	R4090070[40]	N/A[53]	-	-	-
23-123572-004[271]	2-7/8 "	R429218X	R429218X[39]	R406532	R4090070[40]	N/A[53]	-	-	-
23-123572-004[271]	2-7/8 "	R429218X	R429218X[39]	R406532	R4090070[40]	N/A[53]	-	-	-
23-122527-002[272]	2-7/8 "	R429218X	R429218X[39]	R406532	R4090070[40]	N/A[53]	-	-	-
R44141628[269]	2-19/32 "	R42R55245	R42R55245[38]	R402235118	R402238231[201]	-	-	-	-
R44141629[269]	2-19/32 "	R42R55245	R42R55245[38]	R402235118	R402238231[201]	-	-	-	-
R44141629[269]	2-19/32 "	R42R55245	R42R55245[38]	R402235118	R402238231[201]	-	-	-	-
R44141628[269]	2-19/32 "	R42R55245	R42R55245[38]	R402235118	R402238231[201]	-	-	-	-
R44141627[270]	2-19/32 "	R42R55245	R42R55245[38]	R402235118	R402238231[201]	-	-	-	-
R44141608[267]	2-7/8 "	R429218X	R429218X[39]	R406532	R4090070[40]	-	-	-	-
23-123552-004[266]	2-7/8 "	R429218X	R429218X[39]	R406532	R4090070[40]	-	-	-	-
R44141627[270]	2-7/8 "	R429218X	R429218X[39]	R406532	R4090070[40]	-	-	-	-
R44141627[270]	2-7/8 "	R429218X	R429218X[39]	R406532	R4090070[40]	-	-	-	-
R44141608[267]	2-7/8 "	R429218X	R429218X[39]	R406532	R4090070[40]	-	-	-	-
R44141627[270]	2-7/8 "	R429218X	R429218X[39]	R406532	R4090070[40]	-	-	-	-
R44141608[267]	2-7/8 "	R429218X	R429218X[39]	R406532	R4090070[40]	-	-	-	-
R44141628[269]	2-7/8 "	R429218X	R429218X[39]	R406532	R4090070[40]	-	-	-	-
R44141629[269]	2-7/8 "	R429218X	R429218X[39]	R406532	R4090070[40]	-	-	-	-
23-122527-002[272]	2-7/8 "	R429218X	R429218X[39]	R406532	R4090070[40]	-	-	-	-
R44141628[269]	2-7/8 "	R429218X	R429218X[39]	R406532	R4090070[40]	-	-	-	-
23-123552-004[266]	2-19/32 "	R42R55245	R42R55245[38]	R402235118	R402238231[201]	-	-	-	-
R44141608[267]	2-19/32 "	R42R55245	R42R55245[38]	R402235118	R402238231[201]	-	-	-	-
23-123572-004[271]	2-7/8 "	R429218X	R429218X[39]	R406532	R4090070[40]	-	-	-	-
23-122527-002[272]	2-19/32 "	R42R55245	R42R55245[38]	R402235118	R402238231[201]	-	-	-	-
23-123552-004[266]	2-7/8 "	R429218X	R429218X[39]	R406532	R4090070[40]	-	-	-	-
23-123572-004[271]	2-19/32 "	R42R55245	R42R55245[38]	R402235118	R402238231[201]	-	-	-	-
R44141629[269]	2-7/8 "	R429218X	R429218X[39]	R406532	R4090070[40]	-	-	-	-
23-122527-002[272]	2-7/8 "	R429218X	R429218X[39]	R406532	R4090070[40]	-	-	-	-
R44141629[269]	2-7/8 "	R429218X	R429218X[39]	R406532	R4090070[40]	-	-	-	-
23-122527-002[272]	2-7/8 "	R429218X	R429218X[39]	R406532	R4090070[40]	-	-	-	-
R44141608[267]	2-19/32 "	R42R55245	R42R55245[38]	R402235118	R402238231[201]	-	-	-	-

270 - 5 Stud, U Shape, .766 Dia. Studs

271 - 6 Stud, Hat Shape

272 - 6 Stud, U Shape

273 - 5 Stud, U Shape, .780 Dia. Studs

275 - 5 Stud, U Shape, .656 Dia. Studs

MAKE MODEL YEAR AXLE CODE AXLE WEIGHT	AXLE & BRK. TYPE	BRK. MFG.	BRAKE SIZE	FMSI	MERITOR DISC PAD OR BRAKE SHOE	MERITOR GUIDE PIN OR RETURN SPRING KIT	MERITOR CALIPER HWD. KIT OR RETURN SPRING KIT	MERITOR ADJUSTER KIT (LEFT WHEEL)	MERITOR ADJUSTER KIT (RIGHT WHEEL)
ITE(Cont.)									
170, 1700, 1710, 1723, 1724, 1750, 1753, 1754 SERIES CONVENTIONAL CAB, SCHOOL BUS, TILT CAB(Cont.)									
1985 C1710, C1750 Cargostar Tilt Cab RA29, 30, 42, 44	Rd	BX		7108 - D184	MD184	R40H5010	R40H5519	NR	NR
	Rd	BX		7142 - D225	MD225	R40H5010	R40H5522	NR	NR
	Rd	BX		7142 - D225	MD225	R40H5010	R40H5522	NR	NR
	Rd	BX		7142 - D225	MD225	R40H5010	R40H5522	NR	NR
	Rd	BX		7142 - D225	MD225	R40H5010	R40H5522	NR	NR
	Rd	BX		7108 - D184	MD184	R40H5010	R40H5519	NR	NR
S1723, S1753 School Bus	Fd	BX		7108 - D184	MD184	R40H5010	R40H5519	NR	NR
	Fd	BX		7108 - D184	MD184	R40H5010	R40H5519	NR	NR
	Fd	BX		7108 - D184	MD184	R40H5010	R40H5519	NR	NR
	Fd	BX		7108 - D184	MD184	R40H5010	R40H5519	NR	NR
	Fd	BX		7108 - D184	MD184	R40H5010	R40H5519	NR	NR
	Fd	BX		7108 - D184	MD184	R40H5010	R40H5519	NR	NR
	Fd	BX		7108 - D184	MD184	R40H5010	R40H5519	NR	NR
	Fd	BX		7108 - D184	MD184	R40H5010	R40H5519	NR	NR
	Fd	BX		7108 - D184	MD184	R40H5010	R40H5519	NR	NR
	Fd	BX		7108 - D184	MD184	R40H5010	R40H5519	NR	NR
	Fd	BX		7108 - D184	MD184	R40H5010	R40H5519	NR	NR
	Fd	BX		7108 - D184	MD184	R40H5010	R40H5519	NR	NR
	Fd	BX		7108 - D184	MD184	R40H5010	R40H5519	NR	NR
	Fd	BX		7108 - D184	MD184	R40H5010	R40H5519	NR	NR
	Fd	BX		7108 - D184	MD184	R40H5010	R40H5519	NR	NR
	Fd	BX		7108 - D184	MD184	R40H5010	R40H5519	NR	NR
	Fd	BX		7108 - D184	MD184	R40H5010	R40H5519	NR	NR
	Fd	BX		7108 - D184	MD184	R40H5010	R40H5519	NR	NR
	Fd	BX		7108 - D184	MD184	R40H5010	R40H5519	NR	NR
	Fd	BX		7108 - D184	MD184	R40H5010	R40H5519	NR	NR
S1723, S1753 School Bus FA101	Fd	BX		7108 - D184	MD184	R40H5010	R40H5519	NR	NR
	Fd	BX		7108 - D184	MD184	R40H5010	R40H5519	NR	NR
	Fd	BX		7108 - D184	MD184	R40H5010	R40H5519	NR	NR
	Fd	BX		7108 - D184	MD184	R40H5010	R40H5519	NR	NR
	Fd	BX		7108 - D184	MD184	R40H5010	R40H5519	NR	NR
	Fd	BX		7108 - D184	MD184	R40H5010	R40H5519	NR	NR
	Fd	BX		7108 - D184	MD184	R40H5010	R40H5519	NR	NR
	Fd	BX		7108 - D184	MD184	R40H5010	R40H5519	NR	NR
	Fd	BX		7108 - D184	MD184	R40H5010	R40H5519	NR	NR
	Fd	BX		7108 - D184	MD184	R40H5010	R40H5519	NR	NR
	Fd	BX		7108 - D184	MD184	R40H5010	R40H5519	NR	NR
	Fd	BX		7108 - D184	MD184	R40H5010	R40H5519	NR	NR
S1723, S1753 School Bus FA309, 329, 339	Fd	BX		7142 - D225	MD225	R40H5010	R40H5522	NR	NR
	Fd	BX		7142 - D225	MD225	R40H5010	R40H5522	NR	NR
	Fd	BX		7142 - D225	MD225	R40H5010	R40H5522	NR	NR
	Fd	BX		7142 - D225	MD225	R40H5010	R40H5522	NR	NR
	Fd	BX		7142 - D225	MD225	R40H5010	R40H5522	NR	NR
	Fd	BX		7142 - D225	MD225	R40H5010	R40H5522	NR	NR
	Fd	BX		7142 - D225	MD225	R40H5010	R40H5522	NR	NR
	Fd	BX		7142 - D225	MD225	R40H5010	R40H5522	NR	NR
	Fd	BX		7142 - D225	MD225	R40H5010	R40H5522	NR	NR
	Fd	BX		7142 - D225	MD225	R40H5010	R40H5522	NR	NR
	Fd	BX		7142 - D225	MD225	R40H5010	R40H5522	NR	NR
	Fd	BX		7142 - D225	MD225	R40H5010	R40H5522	NR	NR
	Fd	BX		7142 - D225	MD225	R40H5010	R40H5522	NR	NR
	Fd	BX		7142 - D225	MD225	R40H5010	R40H5522	NR	NR
	Fd	BX		7142 - D225	MD225	R40H5010	R40H5522	NR	NR
	Fd	BX		7142 - D225	MD225	R40H5010	R40H5522	NR	NR
	Fd	BX		7142 - D225	MD225	R40H5010	R40H5522	NR	NR
	Fd	BX		7142 - D225	MD225	R40H5010	R40H5522	NR	NR
	Fd	BX		7142 - D225	MD225	R40H5010	R40H5522	NR	NR
	Fd	BX		7142 - D225	MD225	R40H5010	R40H5522	NR	NR
	Fd	BX		7142 - D225	MD225	R40H5010	R40H5522	NR	NR
	Fd	BX		7142 - D225	MD225	R40H5010	R40H5522	NR	NR
	Fd	BX		7142 - D225	MD225	R40H5010	R40H5522	NR	NR
	Fd	BX		7142 - D225	MD225	R40H5010	R40H5522	NR	NR
	Fd	BX		7142 - D225	MD225	R40H5010	R40H5522	NR	NR
	Fd	BX		7142 - D225	MD225	R40H5010	R40H5522	NR	NR

37 - Also available as a New unit

38 - First design, may have external joining tube and uses steel pistons

39 - First design, uses steel pistons.

40 - For chrome plated steel version, use R4090070P

53 - Power Brakes

201 - Steel Piston

266 - 10 Stud, Hat Shaped

268 - 5 Stud, Hat Shape

269 - 5 Stud, U Shape

MERITOR DRUM OR ROTOR NO.	CALIPER OR CYLINDER BORE SIZE	MERITOR CALIPER OR WHEEL CYLINDER (LEFT)	MERITOR CALIPER OR WHEEL CYLINDER (RIGHT)	MERITOR CALIPER OR WHEEL CYLINDER REPAIR KIT	MERITOR CALIPER PISTON	MERITOR MASTER CYLINDER	MERITOR MASTER CYLINDER KIT	MERITOR BRAKE HOSE (LEFT)	MERITOR BRAKE HOSE (RIGHT)
									ITE(Cont.)
170, 1700, 1710, 1723, 1724, 1750, 1753, 1754 SERIES CONVENTIONAL CAB, SCHOOL BUS, TILT CAB(Cont.)									
23-123552-004[266]	2-19/32 "	R42R55245	R42R55245[38]	R402235118	R402238231[201]	-	-	-	-
R44141628[269]	2-7/8 "	R429218X	R429218X[39]	R406532	R4090070[40]	-	-	-	-
23-123552-004[266]	2-7/8 "	R429218X	R429218X[39]	R406532	R4090070[40]	-	-	-	-
23-123572-004[271]	2-7/8 "	R429218X	R429218X[39]	R406532	R4090070[40]	-	-	-	-
23-123572-004[271]	2-7/8 "	R429218X	R429218X[39]	R406532	R4090070[40]	-	-	-	-
23-123572-004[271]	2-19/32 "	R42R55245	R42R55245[38]	R402235118	R402238231[201]	-	-	-	-
23-123572-004[271]	3-3/8 "	R42R55099	R42R55098[37]	R4066780	R4090021[201]	N/A[53]	-	R4577503	R4577503
R44141858[275]	3-3/8 "	R42R55099	R42R55098[37]	R4066780	R4090021[201]	N/A[53]	-	R458632	R458632
R44141476[268]	3-3/8 "	R42R55099	R42R55098[37]	R4066780	R4090021[201]	N/A[53]	-	R4577503	R4577503
R44141476[268]	3-3/8 "	R42R55099	R42R55098[37]	R4066780	R4090021[201]	N/A[53]	-	R4577503	R4577503
23-122920-002[273]	3-3/8 "	R42R55099	R42R55098[37]	R4066780	R4090021[201]	N/A[53]	-	R458632	R458632
23-123552-004[266]	3-3/8 "	R42R55099	R42R55098[37]	R4066780	R4090021[201]	N/A[53]	-	R458632	R458632
23-122920-002[273]	3-3/8 "	R42R55099	R42R55098[37]	R4066780	R4090021[201]	N/A[53]	-	R458632	R458632
23-123552-004[266]	3-3/8 "	R42R55099	R42R55098[37]	R4066780	R4090021[201]	N/A[53]	-	R458632	R458632
23-123572-004[271]	3-3/8 "	R42R55099	R42R55098[37]	R4066780	R4090021[201]	N/A[53]	-	R4577503	R4577503
R44141476[268]	3-3/8 "	R42R55099	R42R55098[37]	R4066780	R4090021[201]	N/A[53]	-	R458632	R458632
R44141858[275]	3-3/8 "	R42R55099	R42R55098[37]	R4066780	R4090021[201]	N/A[53]	-	R458632	R458632
23-122920-002[273]	3-3/8 "	R42R55099	R42R55098[37]	R4066780	R4090021[201]	N/A[53]	-	R4577503	R4577503
R44141858[275]	3-3/8 "	R42R55099	R42R55098[37]	R4066780	R4090021[201]	N/A[53]	-	R4577503	R4577503
R44141476[268]	3-3/8 "	R42R55099	R42R55098[37]	R4066780	R4090021[201]	N/A[53]	-	R458632	R458632
23-122920-002[273]	3-3/8 "	R42R55099	R42R55098[37]	R4066780	R4090021[201]	N/A[53]	-	R4577503	R4577503
23-123552-004[266]	3-3/8 "	R42R55099	R42R55098[37]	R4066780	R4090021[201]	N/A[53]	-	R4577503	R4577503
23-123572-004[271]	3-3/8 "	R42R55099	R42R55098[37]	R4066780	R4090021[201]	N/A[53]	-	R458632	R458632
23-123572-004[271]	3-3/8 "	R42R55099	R42R55098[37]	R4066780	R4090021[201]	N/A[53]	-	R458632	R458632
23-123552-004[266]	3-3/8 "	R42R55099	R42R55098[37]	R4066780	R4090021[201]	N/A[53]	-	R4577503	R4577503
R44141858[275]	3-3/8 "	R42R55099	R42R55098[37]	R4066780	R4090021[201]	N/A[53]	-	R4577503	R4577503
23-123552-004[266]	2-19/32 "	R42R55245	R42R55245[38]	R402235118	R402238231[201]	N/A[53]	-	R4577503	R4577503
23-123572-004[271]	2-19/32 "	R42R55245	R42R55245[38]	R402235118	R402238231[201]	N/A[53]	-	R458632	R458632
R44141476[268]	2-19/32 "	R42R55245	R42R55245[38]	R402235118	R402238231[201]	N/A[53]	-	R4577503	R4577503
R44141858[275]	2-19/32 "	R42R55245	R42R55245[38]	R402235118	R402238231[201]	N/A[53]	-	R458632	R458632
23-122527-002[272]	2-19/32 "	R42R55245	R42R55245[38]	R402235118	R402238231[201]	N/A[53]	-	R458632	R458632
23-122920-002[273]	2-19/32 "	R42R55245	R42R55245[38]	R402235118	R402238231[201]	N/A[53]	-	R458632	R458632
R44141858[275]	2-19/32 "	R42R55245	R42R55245[38]	R402235118	R402238231[201]	N/A[53]	-	R4577503	R4577503
R44141476[268]	2-19/32 "	R42R55245	R42R55245[38]	R402235118	R402238231[201]	N/A[53]	-	R458632	R458632
23-122527-002[272]	2-19/32 "	R42R55245	R42R55245[38]	R402235118	R402238231[201]	N/A[53]	-	R4577503	R4577503
23-123552-004[266]	2-19/32 "	R42R55245	R42R55245[38]	R402235118	R402238231[201]	N/A[53]	-	R458632	R458632
23-122920-002[273]	2-19/32 "	R42R55245	R42R55245[38]	R402235118	R402238231[201]	N/A[53]	-	R4577503	R4577503
23-123572-004[271]	2-19/32 "	R42R55245	R42R55245[38]	R402235118	R402238231[201]	N/A[53]	-	R4577503	R4577503
23-122527-002[272]	2-7/8 "	R429218X	R429218X[39]	R406532	R4090070[40]	N/A[53]	-	R4577503	R4577503
R44141858[275]	2-7/8 "	R429218X	R429218X[39]	R406532	R4090070[40]	N/A[53]	-	R458632	R458632
23-122920-002[273]	2-7/8 "	R429218X	R429218X[39]	R406532	R4090070[40]	N/A[53]	-	R458632	R458632
23-123552-004[266]	2-7/8 "	R429218X	R429218X[39]	R406532	R4090070[40]	N/A[53]	-	R458632	R458632
R44141476[268]	2-7/8 "	R429218X	R429218X[39]	R406532	R4090070[40]	N/A[53]	-	R458632	R458632
23-122527-002[272]	2-7/8 "	R429218X	R429218X[39]	R406532	R4090070[40]	N/A[53]	-	R4577503	R4577503
R44141476[268]	2-7/8 "	R429218X	R429218X[39]	R406532	R4090070[40]	N/A[53]	-	R4577503	R4577503
23-122920-002[273]	2-7/8 "	R429218X	R429218X[39]	R406532	R4090070[40]	N/A[53]	-	R4577503	R4577503
R44141476[268]	2-7/8 "	R429218X	R429218X[39]	R406532	R4090070[40]	N/A[53]	-	R4577503	R4577503
23-122920-002[273]	2-7/8 "	R429218X	R429218X[39]	R406532	R4090070[40]	N/A[53]	-	R4577503	R4577503
R44141858[275]	2-7/8 "	R429218X	R429218X[39]	R406532	R4090070[40]	N/A[53]	-	R4577503	R4577503
23-123572-004[271]	2-7/8 "	R429218X	R429218X[39]	R406532	R4090070[40]	N/A[53]	-	R4577503	R4577503
23-122527-002[272]	2-7/8 "	R429218X	R429218X[39]	R406532	R4090070[40]	N/A[53]	-	R458632	R458632
R44141858[275]	2-7/8 "	R429218X	R429218X[39]	R406532	R4090070[40]	N/A[53]	-	R4577503	R4577503
23-123572-004[271]	2-7/8 "	R429218X	R429218X[39]	R406532	R4090070[40]	N/A[53]	-	R4577503	R4577503
23-123552-004[266]	2-7/8 "	R429218X	R429218X[39]	R406532	R4090070[40]	N/A[53]	-	R4577503	R4577503
23-123572-004[271]	2-7/8 "	R429218X	R429218X[39]	R406532	R4090070[40]	N/A[53]	-	R4577503	R4577503
R44141476[268]	2-7/8 "	R429218X	R429218X[39]	R406532	R4090070[40]	N/A[53]	-	R458632	R458632
23-122527-002[272]	2-7/8 "	R429218X	R429218X[39]	R406532	R4090070[40]	N/A[53]	-	R458632	R458632
R44141476[268]	2-7/8 "	R429218X	R429218X[39]	R406532	R4090070[40]	N/A[53]	-	R458632	R458632
23-122527-002[272]	2-7/8 "	R429218X	R429218X[39]	R406532	R4090070[40]	N/A[53]	-	R458632	R458632

271 - 6 Stud, Hat Shape

272 - 6 Stud, U Shape

273 - 5 Stud, U Shape, .780 Dia. Studs

275 - 5 Stud, U Shape, .656 Dia. Studs

MAKE MODEL YEAR AXLE CODE AXLE WEIGHT	AXLE & BRK. TYPE	BRK. MFG.	BRAKE SIZE	FMSI	MERITOR DISC PAD OR BRAKE SHOE	MERITOR GUIDE PIN OR RETURN SPRING KIT	MERITOR CALIPER HWD. KIT OR RETURN SPRING KIT	MERITOR ADJUSTER KIT (LEFT WHEEL)	MERITOR ADJUSTER KIT (RIGHT WHEEL)
ITE(Cont.)									
170, 1700, 1710, 1723, 1724, 1750, 1753, 1754 SERIES CONVENTIONAL CAB, SCHOOL BUS, TILT CAB(Cont.)									
1985									
	Fd	BX		7142 - D225	MD225	R40H5010	R40H5522	NR	NR
	Fd	BX		7142 - D225	MD225	R40H5010	R40H5522	NR	NR
	Fd	BX		7142 - D225	MD225	R40H5010	R40H5522	NR	NR
	Fd	BX		7142 - D225	MD225	R40H5010	R40H5522	NR	NR
	Fd	BX		7142 - D225	MD225	R40H5010	R40H5522	NR	NR
	Fd	BX		7142 - D225	MD225	R40H5010	R40H5522	NR	NR
	Fd	BX		7142 - D225	MD225	R40H5010	R40H5522	NR	NR
	Fd	BX		7142 - D225	MD225	R40H5010	R40H5522	NR	NR
	Fd	BX		7142 - D225	MD225	R40H5010	R40H5522	NR	NR
	Fd	BX		7142 - D225	MD225	R40H5010	R40H5522	NR	NR
	Fd	BX		7142 - D225	MD225	R40H5010	R40H5522	NR	NR
	Fd	BX		7142 - D225	MD225	R40H5010	R40H5522	NR	NR
	Fd	BX		7142 - D225	MD225	R40H5010	R40H5522	NR	NR
	Fd	BX		7142 - D225	MD225	R40H5010	R40H5522	NR	NR
	Fd	BX		7142 - D225	MD225	R40H5010	R40H5522	NR	NR
	Fd	BX		7142 - D225	MD225	R40H5010	R40H5522	NR	NR
	Fd	BX		7142 - D225	MD225	R40H5010	R40H5522	NR	NR
	Fd	BX		7142 - D225	MD225	R40H5010	R40H5522	NR	NR
	Fd	BX		7142 - D225	MD225	R40H5010	R40H5522	NR	NR
	Fd	BX		7142 - D225	MD225	R40H5010	R40H5522	NR	NR
	Fd	BX		7142 - D225	MD225	R40H5010	R40H5522	NR	NR
	Fd	BX		7142 - D225	MD225	R40H5010	R40H5522	NR	NR
	Fd	BX		7142 - D225	MD225	R40H5010	R40H5522	NR	NR
	Fd	BX		7142 - D225	MD225	R40H5010	R40H5522	NR	NR
	Fd	BX		7142 - D225	MD225	R40H5010	R40H5522	NR	NR
	Fd	BX		7142 - D225	MD225	R40H5010	R40H5522	NR	NR
	Fd	BX		7142 - D225	MD225	R40H5010	R40H5522	NR	NR
	Fd	BX		7142 - D225	MD225	R40H5010	R40H5522	NR	NR
	Fd	BX		7142 - D225	MD225	R40H5010	R40H5522	NR	NR
	Fd	BX		7142 - D225	MD225	R40H5010	R40H5522	NR	NR
	Fd	BX		7142 - D225	MD225	R40H5010	R40H5522	NR	NR
	Fd	BX		7142 - D225	MD225	R40H5010	R40H5522	NR	NR
	Fd	BX		7142 - D225	MD225	R40H5010	R40H5522	NR	NR
	Fd	BX		7142 - D225	MD225	R40H5010	R40H5522	NR	NR
	Fd	BX		7142 - D225	MD225	R40H5010	R40H5522	NR	NR
	Fd	BX		7142 - D225	MD225	R40H5010	R40H5522	NR	NR
	Fd	BX		7142 - D225	MD225	R40H5010	R40H5522	NR	NR
	Fd	BX		7142 - D225	MD225	R40H5010	R40H5522	NR	NR
	Fd	BX		7142 - D225	MD225	R40H5010	R40H5522	NR	NR
	Fd	BX		7142 - D225	MD225	R40H5010	R40H5522	NR	NR
	Fd	BX		7142 - D225	MD225	R40H5010	R40H5522	NR	NR
	Fd	BX		7142 - D225	MD225	R40H5010	R40H5522	NR	NR
	Fd	BX		7142 - D225	MD225	R40H5010	R40H5522	NR	NR
	Fd	BX		7142 - D225	MD225	R40H5010	R40H5522	NR	NR
	Fd	BX		7142 - D225	MD225	R40H5010	R40H5522	NR	NR
	Fd	BX		7142 - D225	MD225	R40H5010	R40H5522	NR	NR
	Fd	BX		7142 - D225	MD225	R40H5010	R40H5522	NR	NR
	Fd	BX		7142 - D225	MD225	R40H5010	R40H5522	NR	NR
	Fd	BX		7142 - D225	MD225	R40H5010	R40H5522	NR	NR
	Fd	BX		7142 - D225	MD225	R40H5010	R40H5522	NR	NR
	Fd	BX		7142 - D225	MD225	R40H5010	R40H5522	NR	NR
	Fd	BX		7142 - D225	MD225	R40H5010	R40H5522	NR	NR
	Fd	BX		7142 - D225	MD225	R40H5010	R40H5522	NR	NR
	Fd	BX		7142 - D225	MD225	R40H5010	R40H5522	NR	NR
	Fd	BX		7142 - D225	MD225	R40H5010	R40H5522	NR	NR
	Fd	BX		7142 - D225	MD225	R40H5010	R40H5522	NR	NR
	Fd	BX		7142 - D225	MD225	R40H5010	R40H5522	NR	NR
	Fd	BX		7142 - D225	MD225	R40H5010	R40H5522	NR	NR
	Fd	BX		7142 - D225	MD225	R40H5010	R40H5522	NR	NR
	Fd	BX		7142 - D225	MD225	R40H5010	R40H5522	NR	NR
	Fd	BX		7142 - D225	MD225	R40H5010	R40H5522	NR	NR
	Fd	BX		7142 - D225	MD225	R40H5010	R40H5522	NR	NR
	Fd	BX		7142 - D225	MD225	R40H5010	R40H5522	NR	NR
	Fd	BX		7142 - D225	MD225	R40H5010	R40H5522	NR	NR
	Fd	BX		7142 - D225	MD225	R40H5010	R40H5522	NR	NR
	Fd	BX		7142 - D225	MD225	R40H5010	R40H5522	NR	NR
	Fd	BX		7142 - D225	MD225	R40H5010	R40H5522	NR	NR
	Fd	BX		7142 - D225	MD225	R40H5010	R40H5522	NR	NR
	Fd	BX		7142 - D225	MD225	R40H5010	R40H5522	NR	NR
	Fd	BX		7142 - D225	MD225	R40H5010	R40H5522	NR	NR
	Fd	BX		7142 - D225	MD225	R40H5010	R40H5522	NR	NR
	Fd	BX		7142 - D225	MD225	R40H5010	R40H5522	NR	NR
	Fd	BX		7142 - D225	MD225	R40H5010	R40H5522	NR	NR
	Fd	BX		7142 - D225	MD225	R40H5010	R40H5522	NR	NR
	Fd	BX		7142 - D225	MD225	R40H5010	R40H5522	NR	NR
	Fd	BX		7142 - D225	MD225	R40H5010	R40H5522	NR	NR
	Fd	BX		7142 - D225	MD225	R40H5010	R40H5522	NR	NR
	Fd	BX		7142 - D225	MD225	R40H5010	R40H5522	NR	NR
	Fd	BX		7142 - D225	MD225	R40H5010	R40H5522	NR	NR
	Fd	BX		7142 - D225	MD225	R40H5010	R40H5522	NR	NR
	Fd	BX		7142 - D225	MD225	R40H5010	R40H5522	NR	NR
	Fd	BX		7142 - D225	MD225	R40H5010	R40H5522	NR	NR
	Fd	BX		7142 - D225	MD225	R40H5010	R40H5522	NR	NR
	Fd	BX		7142 - D225	MD225	R40H5010	R40H5522	NR	NR
	Fd	BX		7142 - D225	MD225	R40H5010	R40H5522	NR	NR
S1723, S1753 School Bus FA73									
	Fd	BX		7108 - D184	MD184	R40H5010	R40H5519	NR	NR
	Fd	BX		7108 - D184	MD184	R40H5010	R40H5519	NR	NR
	Fd	BX		7108 - D184	MD184	R40H5010	R40H5519	NR	NR
	Fd	BX		7108 - D184	MD184	R40H5010	R40H5519	NR	NR
S1723, S1753 School Bus RA29, 30, 42, 44									
	Rd	BX		7142 - D225	MD225	R40H5010	R40H5522	NR	NR
	Rd	BX		7142 - D225	MD225	R40H5010	R40H5522	NR	NR
	Rd	BX		7142 - D225	MD225	R40H5010	R40H5522	NR	NR
	Rd	BX		7142 - D225	MD225	R40H5010	R40H5522	NR	NR
	Rd	BX		7142 - D225	MD225	R40H5010	R40H5522	NR	NR
	Rd	BX		7142 - D225	MD225	R40H5010	R40H5522	NR	NR
	Rd	BX		7142 - D225	MD225	R40H5010	R40H5522	NR	NR
	Rd	BX		7142 - D225	MD225	R40H5010	R40H5522	NR	NR

37 - Also available as a New unit
52 - 18" Length
266 - 10 Stud, Hat Shaped

39 - First design, uses steel pistons.
53 - Power Brakes
267 - 10 Stud, U Shaped

40 - For chrome plated steel version, use R4090070P
201 - Steel Piston
268 - 5 Stud, Hat Shape

MERITOR DRUM OR ROTOR NO.	CALIPER OR CYLINDER BORE SIZE	MERITOR CALIPER OR WHEEL CYLINDER (LEFT)	MERITOR CALIPER OR WHEEL CYLINDER (RIGHT)	MERITOR CALIPER OR WHEEL CYLINDER REPAIR KIT	MERITOR CALIPER PISTON	MERITOR MASTER CYLINDER	MERITOR MASTER CYLINDER KIT	MERITOR BRAKE HOSE (LEFT)	MERITOR BRAKE HOSE (RIGHT)
									ITE(Cont.)
170, 1700, 1710, 1723, 1724, 1750, 1753, 1754 SERIES CONVENTIONAL CAB, SCHOOL BUS, TILT CAB(Cont.)									
23-123552-004[266]	2-7/8 "	R429218X	R429218X[39]	R406532	R4090070[40]	N/A[53]	-	R4577503	R4577503
23-123572-004[271]	2-7/8 "	R429218X	R429218X[39]	R406532	R4090070[40]	N/A[53]	-	R458632	R458632
23-123572-004[271]	2-7/8 "	R429218X	R429218X[39]	R406532	R4090070[40]	N/A[53]	-	R4577503	R4577503
23-123572-004[271]	2-7/8 "	R429218X	R429218X[39]	R406532	R4090070[40]	N/A[53]	-	R458632	R458632
23-122920-002[273]	2-7/8 "	R429218X	R429218X[39]	R406532	R4090070[40]	N/A[53]	-	R4577503	R4577503
23-122527-002[272]	2-7/8 "	R429218X	R429218X[39]	R406532	R4090070[40]	N/A[53]	-	R4577503	R4577503
R44141858[275]	2-7/8 "	R429218X	R429218X[39]	R406532	R4090070[40]	N/A[53]	-	R4577503	R4577503
23-122527-002[272]	2-7/8 "	R429218X	R429218X[39]	R406532	R4090070[40]	N/A[53]	-	R458632	R458632
R44141476[268]	2-7/8 "	R429218X	R429218X[39]	R406532	R4090070[40]	N/A[53]	-	R4577503	R4577503
23-122920-002[273]	2-7/8 "	R429218X	R429218X[39]	R406532	R4090070[40]	N/A[53]	-	R458632	R458632
23-122527-002[272]	2-7/8 "	R429218X	R429218X[39]	R406532	R4090070[40]	N/A[53]	-	R458632	R458632
23-123552-004[266]	2-7/8 "	R429218X	R429218X[39]	R406532	R4090070[40]	N/A[53]	-	R4577503	R4577503
23-123572-004[271]	2-7/8 "	R429218X	R429218X[39]	R406532	R4090070[40]	N/A[53]	-	R4577503	R4577503
R44141858[275]	2-7/8 "	R429218X	R429218X[39]	R406532	R4090070[40]	N/A[53]	-	R458632	R458632
R44141858[275]	2-7/8 "	R429218X	R429218X[39]	R406532	R4090070[40]	N/A[53]	-	R458632	R458632
23-123552-004[266]	2-7/8 "	R429218X	R429218X[39]	R406532	R4090070[40]	N/A[53]	-	R458632	R458632
23-123572-004[271]	2-7/8 "	R429218X	R429218X[39]	R406532	R4090070[40]	N/A[53]	-	R458632	R458632
R44141476[268]	2-7/8 "	R429218X	R429218X[39]	R406532	R4090070[40]	N/A[53]	-	R4577503	R4577503
23-122527-002[272]	2-7/8 "	R429218X	R429218X[39]	R406532	R4090070[40]	N/A[53]	-	R4577503	R4577503
R44141858[275]	2-7/8 "	R429218X	R429218X[39]	R406532	R4090070[40]	N/A[53]	-	R458632	R458632
23-123552-004[266]	2-7/8 "	R429218X	R429218X[39]	R406532	R4090070[40]	N/A[53]	-	R4577503	R4577503
23-123572-004[271]	2-7/8 "	R429218X	R429218X[39]	R406532	R4090070[40]	N/A[53]	-	R4577503	R4577503
23-123552-004[266]	2-7/8 "	R429218X	R429218X[39]	R406532	R4090070[40]	N/A[53]	-	R458632	R458632
23-123572-004[271]	2-7/8 "	R429218X	R429218X[39]	R406532	R4090070[40]	N/A[53]	-	R458632	R458632
R44141476[268]	2-7/8 "	R429218X	R429218X[39]	R406532	R4090070[40]	N/A[53]	-	R458632	R458632
R44141476[268]	2-7/8 "	R429218X	R429218X[39]	R406532	R4090070[40]	N/A[53]	-	R458632	R458632
R44141858[275]	2-7/8 "	R429218X	R429218X[39]	R406532	R4090070[40]	N/A[53]	-	R4577503	R4577503
23-122920-002[273]	2-7/8 "	R429218X	R429218X[39]	R406532	R4090070[40]	N/A[53]	-	R458632	R458632
23-123552-004[266]	2-7/8 "	R429218X	R429218X[39]	R406532	R4090070[40]	N/A[53]	-	R4577503	R4577503
23-122920-002[273]	2-7/8 "	R429218X	R429218X[39]	R406532	R4090070[40]	N/A[53]	-	R458632	R458632
23-122527-002[272]	2-7/8 "	R429218X	R429218X[39]	R406532	R4090070[40]	N/A[53]	-	R4577503	R4577503
23-123552-004[266]	2-7/8 "	R429218X	R429218X[39]	R406532	R4090070[40]	N/A[53]	-	R4577503	R4577503
23-123572-004[271]	2-7/8 "	R429218X	R429218X[39]	R406532	R4090070[40]	N/A[53]	-	R458632	R458632
23-122920-002[273]	2-7/8 "	R429218X	R429218X[39]	R406532	R4090070[40]	N/A[53]	-	R458632	R458632
R44141858[275]	2-7/8 "	R429218X	R429218X[39]	R406532	R4090070[40]	N/A[53]	-	R4577503	R4577503
23-123572-004[271]	2-7/8 "	R429218X	R429218X[39]	R406532	R4090070[40]	N/A[53]	-	R458632	R458632
R44141476[268]	2-7/8 "	R429218X	R429218X[39]	R406532	R4090070[40]	N/A[53]	-	R458632	R458632
23-122527-002[272]	2-7/8 "	R429218X	R429218X[39]	R406532	R4090070[40]	N/A[53]	-	R4577503	R4577503
23-122527-002[272]	2-7/8 "	R429218X	R429218X[39]	R406532	R4090070[40]	N/A[53]	-	R458632	R458632
23-122920-002[273]	2-7/8 "	R429218X	R429218X[39]	R406532	R4090070[40]	N/A[53]	-	R4577503	R4577503
23-123552-004[266]	2-7/8 "	R429218X	R429218X[39]	R406532	R4090070[40]	N/A[53]	-	R458632	R458632
R44141476[268]	2-7/8 "	R429218X	R429218X[39]	R406532	R4090070[40]	N/A[53]	-	R4577503	R4577503
R44141476[268]	2-7/8 "	R429218X	R429218X[39]	R406532	R4090070[40]	N/A[53]	-	R4577503	R4577503
23-123552-004[266]	2-7/8 "	R429218X	R429218X[39]	R406532	R4090070[40]	N/A[53]	-	R458632	R458632
R44141858[275]	2-7/8 "	R429218X	R429218X[39]	R406532	R4090070[40]	N/A[53]	-	R458632	R458632
R44141858[275]	2-7/8 "	R429218X	R429218X[39]	R406532	R4090070[40]	N/A[53]	-	R4577503	R4577503
23-123552-004[266]	2-7/8 "	R429218X	R429218X[39]	R406532	R4090070[40]	N/A[53]	-	R458632	R458632
23-122920-002[273]	2-7/8 "	R429218X	R429218X[39]	R406532	R4090070[40]	N/A[53]	-	R4577503	R4577503
R44141858[275]	2-7/8 "	R429218X	R429218X[39]	R406532	R4090070[40]	N/A[53]	-	R458632	R458632
23-122527-002[272]	3-3/8 "	R42R55099	R42R55098[37]	R4066780	R4090021[201]	N/A[53]	-	R458632	R458632
23-122527-002[272]	3-3/8 "	R42R55099	R42R55098[37]	R4066780	R4090021[201]	N/A[53]	-	R4577503	R4577503
23-122527-002[272]	3-3/8 "	R42R55099	R42R55098[37]	R4066780	R4090021[201]	N/A[53]	-	R458632	R458632
23-122527-002[272]	3-3/8 "	R42R55099	R42R55098[37]	R4066780	R4090021[201]	N/A[53]	-	R4577503	R4577503
R44141628[269]	2-7/8 "	R429218X	R429218X[39]	R406532	R4090070[40]	-	-	R458634[52]	R458634
23-123552-004[266]	2-7/8 "	R429218X	R429218X[39]	R406532	R4090070[40]	-	-	R458634[52]	R458634
23-123572-004[271]	2-7/8 "	R429218X	R429218X[39]	R406532	R4090070[40]	-	-	R458634[52]	R458634
R44141608[267]	2-7/8 "	R429218X	R429218X[39]	R406532	R4090070[40]	-	-	R458634[52]	R458634
R44141629[269]	2-7/8 "	R429218X	R429218X[39]	R406532	R4090070[40]	-	-	R458634[52]	R458634
23-122527-002[272]	2-7/8 "	R429218X	R429218X[39]	R406532	R4090070[40]	-	-	R458634[52]	R458634
23-123552-004[266]	2-7/8 "	R429218X	R429218X[39]	R406532	R4090070[40]	-	-	R458634[52]	R458634
23-123572-004[271]	2-7/8 "	R429218X	R429218X[39]	R406532	R4090070[40]	-	-	R458634[52]	R458634

269 - 5 Stud, U Shape
271 - 6 Stud, Hat Shape
272 - 6 Stud, U Shape
273 - 5 Stud, U Shape, .780 Dia. Studs
275 - 5 Stud, U Shape, .656 Dia. Studs

MAKE MODEL YEAR AXLE CODE AXLE WEIGHT	AXLE & BRK. TYPE	BRK. MFG.	BRAKE SIZE	FMSI	MERITOR DISC PAD OR BRAKE SHOE	MERITOR GUIDE PIN OR RETURN SPRING KIT	MERITOR CALIPER HWD. KIT OR RETURN SPRING KIT	MERITOR ADJUSTER KIT (LEFT WHEEL)	MERITOR ADJUSTER KIT (RIGHT WHEEL)
ITE(Cont.)									
170, 1700, 1710, 1723, 1724, 1750, 1753, 1754 SERIES CONVENTIONAL CAB, SCHOOL BUS, TILT CAB(Cont.)									
1985									
	Rd	BX		7142 - D225	MD225	R40H5010	R40H5522	NR	NR
	Rd	BX		7142 - D225	MD225	R40H5010	R40H5522	NR	NR
	Rd	BX		7108 - D184	MD184	R40H5010	R40H5519	NR	NR
	Rd	BX		7108 - D184	MD184	R40H5010	R40H5519	NR	NR
	Rd	BX		7108 - D184	MD184	R40H5010	R40H5519	NR	NR
	Rd	BX		7142 - D225	MD225	R40H5010	R40H5522	NR	NR
	Rd	BX		7108 - D184	MD184	R40H5010	R40H5519	NR	NR
	Rd	BX		7108 - D184	MD184	R40H5010	R40H5519	NR	NR
	Rd	BX		7142 - D225	MD225	R40H5010	R40H5522	NR	NR
	Rd	BX		7142 - D225	MD225	R40H5010	R40H5522	NR	NR
	Rd	BX		7108 - D184	MD184	R40H5010	R40H5519	NR	NR
	Rd	BX		7142 - D225	MD225	R40H5010	R40H5522	NR	NR
	Rd	BX		7142 - D225	MD225	R40H5010	R40H5522	NR	NR
	Rd	BX		7108 - D184	MD184	R40H5010	R40H5519	NR	NR
	Rd	BX		7142 - D225	MD225	R40H5010	R40H5522	NR	NR
	Rd	BX		7108 - D184	MD184	R40H5010	R40H5519	NR	NR
	Rd	BX		7142 - D225	MD225	R40H5010	R40H5522	NR	NR
	Rd	BX		7142 - D225	MD225	R40H5010	R40H5522	NR	NR
	Rd	BX		7108 - D184	MD184	R40H5010	R40H5519	NR	NR
	Rd	BX		7142 - D225	MD225	R40H5010	R40H5522	NR	NR
	Rd	BX		7108 - D184	MD184	R40H5010	R40H5519	NR	NR
	Rd	BX		7108 - D184	MD184	R40H5010	R40H5519	NR	NR
	Rd	BX		7142 - D225	MD225	R40H5010	R40H5522	NR	NR
	Rd	BX		7142 - D225	MD225	R40H5010	R40H5522	NR	NR
	Rd	BX		7108 - D184	MD184	R40H5010	R40H5519	NR	NR
S1724, S1754 Conventional	Fd	BX		7108 - D184	MD184	R40H5010	R40H5519	NR	NR
	Fd	BX		7108 - D184	MD184	R40H5010	R40H5519	NR	NR
	Fd	BX		7108 - D184	MD184	R40H5010	R40H5519	NR	NR
	Fd	BX		7108 - D184	MD184	R40H5010	R40H5519	NR	NR
	Fd	BX		7108 - D184	MD184	R40H5010	R40H5519	NR	NR
	Fd	BX		7108 - D184	MD184	R40H5010	R40H5519	NR	NR
	Fd	BX		7108 - D184	MD184	R40H5010	R40H5519	NR	NR
	Fd	BX		7108 - D184	MD184	R40H5010	R40H5519	NR	NR
	Fd	BX		7108 - D184	MD184	R40H5010	R40H5519	NR	NR
	Fd	BX		7108 - D184	MD184	R40H5010	R40H5519	NR	NR
	Fd	BX		7108 - D184	MD184	R40H5010	R40H5519	NR	NR
	Fd	BX		7108 - D184	MD184	R40H5010	R40H5519	NR	NR
	Fd	BX		7108 - D184	MD184	R40H5010	R40H5519	NR	NR
	Fd	BX		7108 - D184	MD184	R40H5010	R40H5519	NR	NR
	Fd	BX		7108 - D184	MD184	R40H5010	R40H5519	NR	NR
	Fd	BX		7108 - D184	MD184	R40H5010	R40H5519	NR	NR
	Fd	BX		7108 - D184	MD184	R40H5010	R40H5519	NR	NR
	Fd	BX		7108 - D184	MD184	R40H5010	R40H5519	NR	NR
	Fd	BX		7108 - D184	MD184	R40H5010	R40H5519	NR	NR
	Fd	BX		7108 - D184	MD184	R40H5010	R40H5519	NR	NR
	Fd	BX		7108 - D184	MD184	R40H5010	R40H5519	NR	NR
S1724, S1754 Conventional FA101	Fd	BX		7108 - D184	MD184	R40H5010	R40H5519	NR	NR
	Fd	BX		7108 - D184	MD184	R40H5010	R40H5519	NR	NR
	Fd	BX		7108 - D184	MD184	R40H5010	R40H5519	NR	NR
	Fd	BX		7108 - D184	MD184	R40H5010	R40H5519	NR	NR
	Fd	BX		7108 - D184	MD184	R40H5010	R40H5519	NR	NR
	Fd	BX		7108 - D184	MD184	R40H5010	R40H5519	NR	NR
	Fd	BX		7108 - D184	MD184	R40H5010	R40H5519	NR	NR
	Fd	BX		7108 - D184	MD184	R40H5010	R40H5519	NR	NR
	Fd	BX		7108 - D184	MD184	R40H5010	R40H5519	NR	NR
	Fd	BX		7108 - D184	MD184	R40H5010	R40H5519	NR	NR
	Fd	BX		7108 - D184	MD184	R40H5010	R40H5519	NR	NR
	Fd	BX		7108 - D184	MD184	R40H5010	R40H5519	NR	NR
	Fd	BX		7108 - D184	MD184	R40H5010	R40H5519	NR	NR
S1724, S1754 Conventional FA309, 329, 339	Fd	BX		7142 - D225	MD225	R40H5010	R40H5522	NR	NR
	Fd	BX		7142 - D225	MD225	R40H5010	R40H5522	NR	NR
	Fd	BX		7142 - D225	MD225	R40H5010	R40H5522	NR	NR
	Fd	BX		7142 - D225	MD225	R40H5010	R40H5522	NR	NR

37 - Also available as a New unit

38 - First design, may have external joining tube and uses steel pistons

39 - First design, uses steel pistons.

40 - For chrome plated steel version, use R4090070P

52 - 18" Length

201 - Steel Piston

266 - 10 Stud, Hat Shaped

267 - 10 Stud, U Shaped

268 - 5 Stud, Hat Shape

MERITOR DRUM OR ROTOR NO.	CALIPER OR CYLINDER BORE SIZE	MERITOR CALIPER OR WHEEL CYLINDER (LEFT)	MERITOR CALIPER OR WHEEL CYLINDER (RIGHT)	MERITOR CALIPER OR WHEEL CYLINDER REPAIR KIT	MERITOR CALIPER PISTON	MERITOR MASTER CYLINDER	MERITOR MASTER CYLINDER KIT	MERITOR BRAKE HOSE (LEFT)	MERITOR BRAKE HOSE (RIGHT)
									ITE(Cont.)
170, 1700, 1710, 1723, 1724, 1750, 1753, 1754 SERIES CONVENTIONAL CAB, SCHOOL BUS, TILT CAB(Cont.)									
R44141627[270]	2-7/8 "	R429218X	R429218X[39]	R406532	R4090070[40]	-	-	R458634[52]	R458634
R44141608[267]	2-7/8 "	R429218X	R429218X[39]	R406532	R4090070[40]	-	-	R458634[52]	R458634
23-123572-004[271]	2-19/32 "	R42R55245	R42R55245[38]	R402235118	R402238231[201]	-	-	R458634[52]	R458634
23-123552-004[266]	2-19/32 "	R42R55245	R42R55245[38]	R402235118	R402238231[201]	-	-	R458634[52]	R458634
R44141629[269]	2-19/32 "	R42R55245	R42R55245[38]	R402235118	R402238231[201]	-	-	R458634[52]	R458634
23-122527-002[272]	2-7/8 "	R429218X	R429218X[39]	R406532	R4090070[40]	-	-	R458634[52]	R458634
23-122527-002[272]	2-19/32 "	R42R55245	R42R55245[38]	R402235118	R402238231[201]	-	-	R458634[52]	R458634
R44141608[267]	2-19/32 "	R42R55245	R42R55245[38]	R402235118	R402238231[201]	-	-	R458634[52]	R458634
R44141627[270]	2-7/8 "	R429218X	R429218X[39]	R406532	R4090070[40]	-	-	R458634[52]	R458634
R44141628[269]	2-7/8 "	R429218X	R429218X[39]	R406532	R4090070[40]	-	-	R458634[52]	R458634
R44141628[269]	2-19/32 "	R42R55245	R42R55245[38]	R402235118	R402238231[201]	-	-	R458634[52]	R458634
R44141628[269]	2-7/8 "	R429218X	R429218X[39]	R406532	R4090070[40]	-	-	R458634[52]	R458634
R44141629[269]	2-7/8 "	R429218X	R429218X[39]	R406532	R4090070[40]	-	-	R458634[52]	R458634
23-123552-004[266]	2-19/32 "	R42R55245	R42R55245[38]	R402235118	R402238231[201]	-	-	R458634[52]	R458634
23-122527-002[272]	2-7/8 "	R429218X	R429218X[39]	R406532	R4090070[40]	-	-	R458634[52]	R458634
23-123572-004[271]	2-19/32 "	R42R55245	R42R55245[38]	R402235118	R402238231[201]	-	-	R458634[52]	R458634
R44141629[269]	2-7/8 "	R429218X	R429218X[39]	R406532	R4090070[40]	-	-	R458634[52]	R458634
R44141608[267]	2-7/8 "	R429218X	R429218X[39]	R406532	R4090070[40]	-	-	R458634[52]	R458634
R44141629[269]	2-19/32 "	R42R55245	R42R55245[38]	R402235118	R402238231[201]	-	-	R458634[52]	R458634
R44141627[270]	2-7/8 "	R429218X	R429218X[39]	R406532	R4090070[40]	-	-	R458634[52]	R458634
R44141628[269]	2-19/32 "	R42R55245	R42R55245[38]	R402235118	R402238231[201]	-	-	R458634[52]	R458634
R44141608[267]	2-19/32 "	R42R55245	R42R55245[38]	R402235118	R402238231[201]	-	-	R458634[52]	R458634
23-123572-004[271]	2-7/8 "	R429218X	R429218X[39]	R406532	R4090070[40]	-	-	R458634[52]	R458634
23-123552-004[266]	2-7/8 "	R429218X	R429218X[39]	R406532	R4090070[40]	-	-	R458634[52]	R458634
R44141627[270]	2-19/32 "	R42R55245	R42R55245[38]	R402235118	R402238231[201]	-	-	R458634[52]	R458634
23-122920-002[273]	3-3/8 "	R42R55099	R42R55098[37]	R4066780	R4090021[201]	-	-	R4577503	R4577503
23-123572-004[271]	3-3/8 "	R42R55099	R42R55098[37]	R4066780	R4090021[201]	-	-	R458632	R458632
R44141476[268]	3-3/8 "	R42R55099	R42R55098[37]	R4066780	R4090021[201]	-	-	R458632	R458632
R44141858[275]	3-3/8 "	R42R55099	R42R55098[37]	R4066780	R4090021[201]	-	-	R4577503	R4577503
R44141476[268]	3-3/8 "	R42R55099	R42R55098[37]	R4066780	R4090021[201]	-	-	R458632	R458632
R44141858[275]	3-3/8 "	R42R55099	R42R55098[37]	R4066780	R4090021[201]	-	-	R4577503	R4577503
23-123572-004[271]	3-3/8 "	R42R55099	R42R55098[37]	R4066780	R4090021[201]	-	-	R4577503	R4577503
R44141476[268]	3-3/8 "	R42R55099	R42R55098[37]	R4066780	R4090021[201]	-	-	R4577503	R4577503
23-122920-002[273]	3-3/8 "	R42R55099	R42R55098[37]	R4066780	R4090021[201]	-	-	R458632	R458632
R44141476[268]	3-3/8 "	R42R55099	R42R55098[37]	R4066780	R4090021[201]	-	-	R4577503	R4577503
R44141858[275]	3-3/8 "	R42R55099	R42R55098[37]	R4066780	R4090021[201]	-	-	R458632	R458632
23-123572-004[271]	3-3/8 "	R42R55099	R42R55098[37]	R4066780	R4090021[201]	-	-	R458632	R458632
23-123552-004[266]	3-3/8 "	R42R55099	R42R55098[37]	R4066780	R4090021[201]	-	-	R458632	R458632
23-123552-004[266]	3-3/8 "	R42R55099	R42R55098[37]	R4066780	R4090021[201]	-	-	R4577503	R4577503
23-123552-004[266]	3-3/8 "	R42R55099	R42R55098[37]	R4066780	R4090021[201]	-	-	R4577503	R4577503
R44141858[275]	3-3/8 "	R42R55099	R42R55098[37]	R4066780	R4090021[201]	-	-	R458632	R458632
23-122920-002[273]	3-3/8 "	R42R55099	R42R55098[37]	R4066780	R4090021[201]	-	-	R458632	R458632
23-123552-004[266]	3-3/8 "	R42R55099	R42R55098[37]	R4066780	R4090021[201]	-	-	R458632	R458632
23-122920-002[273]	3-3/8 "	R42R55099	R42R55098[37]	R4066780	R4090021[201]	-	-	R4577503	R4577503
23-123572-004[271]	3-3/8 "	R42R55099	R42R55098[37]	R4066780	R4090021[201]	-	-	R4577503	R4577503
23-122920-002[273]	2-19/32 "	R42R55245	R42R55245[38]	R402235118	R402238231[201]	-	-	R458632	R458632
23-123572-004[271]	2-19/32 "	R42R55245	R42R55245[38]	R402235118	R402238231[201]	-	-	R4577503	R4577503
R44141476[268]	2-19/32 "	R42R55245	R42R55245[38]	R402235118	R402238231[201]	-	-	R4577503	R4577503
R44141858[275]	2-19/32 "	R42R55245	R42R55245[38]	R402235118	R402238231[201]	-	-	R458632	R458632
R44141476[268]	2-19/32 "	R42R55245	R42R55245[38]	R402235118	R402238231[201]	-	-	R458632	R458632
23-123552-004[266]	2-19/32 "	R42R55245	R42R55245[38]	R402235118	R402238231[201]	-	-	R458632	R458632
23-122527-002[272]	2-19/32 "	R42R55245	R42R55245[38]	R402235118	R402238231[201]	-	-	R458632	R458632
R44141858[275]	2-19/32 "	R42R55245	R42R55245[38]	R402235118	R402238231[201]	-	-	R4577503	R4577503
23-122527-002[272]	2-19/32 "	R42R55245	R42R55245[38]	R402235118	R402238231[201]	-	-	R4577503	R4577503
23-123572-004[271]	2-19/32 "	R42R55245	R42R55245[38]	R402235118	R402238231[201]	-	-	R458632	R458632
23-123552-004[266]	2-19/32 "	R42R55245	R42R55245[38]	R402235118	R402238231[201]	-	-	R4577503	R4577503
23-122920-002[273]	2-19/32 "	R42R55245	R42R55245[38]	R402235118	R402238231[201]	-	-	R4577503	R4577503
23-122527-002[272]	2-7/8 "	R429218X	R429218X[39]	R406532	R4090070[40]	-	-	R458632	R458632
23-122527-002[272]	2-7/8 "	R429218X	R429218X[39]	R406532	R4090070[40]	-	-	R4577503	R4577503
23-123572-004[271]	2-7/8 "	R429218X	R429218X[39]	R406532	R4090070[40]	-	-	R458632	R458632
R44141476[268]	2-7/8 "	R429218X	R429218X[39]	R406532	R4090070[40]	-	-	R458632	R458632

269 - 5 Stud, U Shape

270 - 5 Stud, U Shape, .766 Dia. Studs

271 - 6 Stud, Hat Shape

272 - 6 Stud, U Shape

273 - 5 Stud, U Shape, .780 Dia. Studs

275 - 5 Stud, U Shape, .656 Dia. Studs

ITE(Cont.)

170, 1700, 1710, 1723, 1724, 1750, 1753, 1754 SERIES CONVENTIONAL CAB, SCHOOL BUS, TILT CAB(Cont.)

MAKE MODEL YEAR AXLE CODE AXLE WEIGHT	AXLE & BRK. TYPE	BRK. MFG.	BRAKE SIZE	FMSI	MERITOR DISC PAD OR BRAKE SHOE	MERITOR GUIDE PIN OR RETURN SPRING KIT	MERITOR CALIPER HWD. KIT OR RETURN SPRING KIT	MERITOR ADJUSTER KIT (LEFT WHEEL)	MERITOR ADJUSTER KIT (RIGHT WHEEL)
1985									
	Fd	BX		7142 - D225	MD225	R40H5010	R40H5522	NR	NR
	Fd	BX		7142 - D225	MD225	R40H5010	R40H5522	NR	NR
	Fd	BX		7142 - D225	MD225	R40H5010	R40H5522	NR	NR
	Fd	BX		7142 - D225	MD225	R40H5010	R40H5522	NR	NR
	Fd	BX		7142 - D225	MD225	R40H5010	R40H5522	NR	NR
	Fd	BX		7142 - D225	MD225	R40H5010	R40H5522	NR	NR
	Fd	BX		7142 - D225	MD225	R40H5010	R40H5522	NR	NR
	Fd	BX		7142 - D225	MD225	R40H5010	R40H5522	NR	NR
	Fd	BX		7142 - D225	MD225	R40H5010	R40H5522	NR	NR
	Fd	BX		7142 - D225	MD225	R40H5010	R40H5522	NR	NR
	Fd	BX		7142 - D225	MD225	R40H5010	R40H5522	NR	NR
	Fd	BX		7142 - D225	MD225	R40H5010	R40H5522	NR	NR
	Fd	BX		7142 - D225	MD225	R40H5010	R40H5522	NR	NR
	Fd	BX		7142 - D225	MD225	R40H5010	R40H5522	NR	NR
	Fd	BX		7142 - D225	MD225	R40H5010	R40H5522	NR	NR
	Fd	BX		7142 - D225	MD225	R40H5010	R40H5522	NR	NR
	Fd	BX		7142 - D225	MD225	R40H5010	R40H5522	NR	NR
	Fd	BX		7142 - D225	MD225	R40H5010	R40H5522	NR	NR
	Fd	BX		7142 - D225	MD225	R40H5010	R40H5522	NR	NR
	Fd	BX		7142 - D225	MD225	R40H5010	R40H5522	NR	NR
	Fd	BX		7142 - D225	MD225	R40H5010	R40H5522	NR	NR
	Fd	BX		7142 - D225	MD225	R40H5010	R40H5522	NR	NR
	Fd	BX		7142 - D225	MD225	R40H5010	R40H5522	NR	NR
	Fd	BX		7142 - D225	MD225	R40H5010	R40H5522	NR	NR
	Fd	BX		7142 - D225	MD225	R40H5010	R40H5522	NR	NR
	Fd	BX		7142 - D225	MD225	R40H5010	R40H5522	NR	NR
	Fd	BX		7142 - D225	MD225	R40H5010	R40H5522	NR	NR
	Fd	BX		7142 - D225	MD225	R40H5010	R40H5522	NR	NR
	Fd	BX		7142 - D225	MD225	R40H5010	R40H5522	NR	NR
	Fd	BX		7142 - D225	MD225	R40H5010	R40H5522	NR	NR
	Fd	BX		7142 - D225	MD225	R40H5010	R40H5522	NR	NR
	Fd	BX		7142 - D225	MD225	R40H5010	R40H5522	NR	NR
	Fd	BX		7142 - D225	MD225	R40H5010	R40H5522	NR	NR
	Fd	BX		7142 - D225	MD225	R40H5010	R40H5522	NR	NR
	Fd	BX		7142 - D225	MD225	R40H5010	R40H5522	NR	NR
	Fd	BX		7142 - D225	MD225	R40H5010	R40H5522	NR	NR
	Fd	BX		7142 - D225	MD225	R40H5010	R40H5522	NR	NR
	Fd	BX		7142 - D225	MD225	R40H5010	R40H5522	NR	NR
	Fd	BX		7142 - D225	MD225	R40H5010	R40H5522	NR	NR
	Fd	BX		7142 - D225	MD225	R40H5010	R40H5522	NR	NR
	Fd	BX		7142 - D225	MD225	R40H5010	R40H5522	NR	NR
	Fd	BX		7142 - D225	MD225	R40H5010	R40H5522	NR	NR
	Fd	BX		7142 - D225	MD225	R40H5010	R40H5522	NR	NR
	Fd	BX		7142 - D225	MD225	R40H5010	R40H5522	NR	NR
	Fd	BX		7142 - D225	MD225	R40H5010	R40H5522	NR	NR
	Fd	BX		7142 - D225	MD225	R40H5010	R40H5522	NR	NR
	Fd	BX		7142 - D225	MD225	R40H5010	R40H5522	NR	NR
	Fd	BX		7142 - D225	MD225	R40H5010	R40H5522	NR	NR
	Fd	BX		7142 - D225	MD225	R40H5010	R40H5522	NR	NR
	Fd	BX		7142 - D225	MD225	R40H5010	R40H5522	NR	NR
	Fd	BX		7142 - D225	MD225	R40H5010	R40H5522	NR	NR
	Fd	BX		7142 - D225	MD225	R40H5010	R40H5522	NR	NR
	Fd	BX		7142 - D225	MD225	R40H5010	R40H5522	NR	NR
	Fd	BX		7142 - D225	MD225	R40H5010	R40H5522	NR	NR
	Fd	BX		7142 - D225	MD225	R40H5010	R40H5522	NR	NR
	Fd	BX		7142 - D225	MD225	R40H5010	R40H5522	NR	NR
	Fd	BX		7142 - D225	MD225	R40H5010	R40H5522	NR	NR
	Fd	BX		7142 - D225	MD225	R40H5010	R40H5522	NR	NR
	Fd	BX		7142 - D225	MD225	R40H5010	R40H5522	NR	NR
	Fd	BX		7142 - D225	MD225	R40H5010	R40H5522	NR	NR
	Fd	BX		7142 - D225	MD225	R40H5010	R40H5522	NR	NR
	Fd	BX		7142 - D225	MD225	R40H5010	R40H5522	NR	NR
	Fd	BX		7142 - D225	MD225	R40H5010	R40H5522	NR	NR

39 - First design, uses steel pistons.
268 - 5 Stud, Hat Shape
273 - 5 Stud, U Shape, .780 Dia. Studs
40 - For chrome plated steel version, use R4090070P
271 - 6 Stud, Hat Shape
275 - 5 Stud, U Shape, .656 Dia. Studs
266 - 10 Stud, Hat Shaped
272 - 6 Stud, U Shape

MERITOR DRUM OR ROTOR NO.	CALIPER OR CYLINDER BORE SIZE	MERITOR CALIPER OR WHEEL CYLINDER (LEFT)	MERITOR CALIPER OR WHEEL CYLINDER (RIGHT)	MERITOR CALIPER OR WHEEL CYLINDER REPAIR KIT	MERITOR CALIPER PISTON	MERITOR MASTER CYLINDER	MERITOR MASTER CYLINDER KIT	MERITOR BRAKE HOSE (LEFT)	MERITOR BRAKE HOSE (RIGHT)
									ITE(Cont.)
170, 1700, 1710, 1723, 1724, 1750, 1753, 1754 SERIES CONVENTIONAL CAB, SCHOOL BUS, TILT CAB(Cont.)									
R44141858[275]	2-7/8 "	R429218X	R429218X[39]	R406532	R4090070[40]	-	-	R4577503	R4577503
23-122527-002[272]	2-7/8 "	R429218X	R429218X[39]	R406532	R4090070[40]	-	-	R4577503	R4577503
R44141476[268]	2-7/8 "	R429218X	R429218X[39]	R406532	R4090070[40]	-	-	R4577503	R4577503
23-122920-002[273]	2-7/8 "	R429218X	R429218X[39]	R406532	R4090070[40]	-	-	R4577503	R4577503
23-122920-002[273]	2-7/8 "	R429218X	R429218X[39]	R406532	R4090070[40]	-	-	R4577503	R4577503
23-123552-004[266]	2-7/8 "	R429218X	R429218X[39]	R406532	R4090070[40]	-	-	R4577503	R4577503
23-123572-004[271]	2-7/8 "	R429218X	R429218X[39]	R406532	R4090070[40]	-	-	R458632	R458632
R44141858[275]	2-7/8 "	R429218X	R429218X[39]	R406532	R4090070[40]	-	-	R458632	R458632
R44141476[268]	2-7/8 "	R429218X	R429218X[39]	R406532	R4090070[40]	-	-	R4577503	R4577503
23-122920-002[273]	2-7/8 "	R429218X	R429218X[39]	R406532	R4090070[40]	-	-	R4577503	R4577503
23-123552-004[266]	2-7/8 "	R429218X	R429218X[39]	R406532	R4090070[40]	-	-	R4577503	R4577503
23-123552-004[266]	2-7/8 "	R429218X	R429218X[39]	R406532	R4090070[40]	-	-	R4577503	R4577503
23-123572-004[271]	2-7/8 "	R429218X	R429218X[39]	R406532	R4090070[40]	-	-	R458632	R458632
R44141858[275]	2-7/8 "	R429218X	R429218X[39]	R406532	R4090070[40]	-	-	R4577503	R4577503
23-123572-004[271]	2-7/8 "	R429218X	R429218X[39]	R406532	R4090070[40]	-	-	R458632	R458632
23-123552-004[266]	2-7/8 "	R429218X	R429218X[39]	R406532	R4090070[40]	-	-	R458632	R458632
R44141476[268]	2-7/8 "	R429218X	R429218X[39]	R406532	R4090070[40]	-	-	R458632	R458632
23-123572-004[271]	2-7/8 "	R429218X	R429218X[39]	R406532	R4090070[40]	-	-	R458632	R458632
23-122527-002[272]	2-7/8 "	R429218X	R429218X[39]	R406532	R4090070[40]	-	-	R4577503	R4577503
R44141858[275]	2-7/8 "	R429218X	R429218X[39]	R406532	R4090070[40]	-	-	R4577503	R4577503
R44141858[275]	2-7/8 "	R429218X	R429218X[39]	R406532	R4090070[40]	-	-	R458632	R458632
23-123572-004[271]	2-7/8 "	R429218X	R429218X[39]	R406532	R4090070[40]	-	-	R4577503	R4577503
23-123572-004[271]	2-7/8 "	R429218X	R429218X[39]	R406532	R4090070[40]	-	-	R4577503	R4577503
R44141858[275]	2-7/8 "	R429218X	R429218X[39]	R406532	R4090070[40]	-	-	R458632	R458632
23-123572-004[271]	2-7/8 "	R429218X	R429218X[39]	R406532	R4090070[40]	-	-	R458632	R458632
23-122527-002[272]	2-7/8 "	R429218X	R429218X[39]	R406532	R4090070[40]	-	-	R458632	R458632
23-123552-004[266]	2-7/8 "	R429218X	R429218X[39]	R406532	R4090070[40]	-	-	R458632	R458632
R44141858[275]	2-7/8 "	R429218X	R429218X[39]	R406532	R4090070[40]	-	-	R4577503	R4577503
23-123572-004[271]	2-7/8 "	R429218X	R429218X[39]	R406532	R4090070[40]	-	-	R4577503	R4577503
23-123552-004[266]	2-7/8 "	R429218X	R429218X[39]	R406532	R4090070[40]	-	-	R4577503	R4577503
23-123552-004[266]	2-7/8 "	R429218X	R429218X[39]	R406532	R4090070[40]	-	-	R458632	R458632
23-122527-002[272]	2-7/8 "	R429218X	R429218X[39]	R406532	R4090070[40]	-	-	R458632	R458632
23-123552-004[266]	2-7/8 "	R429218X	R429218X[39]	R406532	R4090070[40]	-	-	R4577503	R4577503
23-122920-002[273]	2-7/8 "	R429218X	R429218X[39]	R406532	R4090070[40]	-	-	R458632	R458632
23-122527-002[272]	2-7/8 "	R429218X	R429218X[39]	R406532	R4090070[40]	-	-	R458632	R458632
23-122920-002[273]	2-7/8 "	R429218X	R429218X[39]	R406532	R4090070[40]	-	-	R4577503	R4577503
R44141476[268]	2-7/8 "	R429218X	R429218X[39]	R406532	R4090070[40]	-	-	R4577503	R4577503
R44141476[268]	2-7/8 "	R429218X	R429218X[39]	R406532	R4090070[40]	-	-	R4577503	R4577503
23-122920-002[273]	2-7/8 "	R429218X	R429218X[39]	R406532	R4090070[40]	-	-	R458632	R458632
23-123572-004[271]	2-7/8 "	R429218X	R429218X[39]	R406532	R4090070[40]	-	-	R4577503	R4577503
R44141858[275]	2-7/8 "	R429218X	R429218X[39]	R406532	R4090070[40]	-	-	R458632	R458632
23-122527-002[272]	2-7/8 "	R429218X	R429218X[39]	R406532	R4090070[40]	-	-	R4577503	R4577503
R44141476[268]	2-7/8 "	R429218X	R429218X[39]	R406532	R4090070[40]	-	-	R458632	R458632
R44141858[275]	2-7/8 "	R429218X	R429218X[39]	R406532	R4090070[40]	-	-	R458632	R458632
R44141476[268]	2-7/8 "	R429218X	R429218X[39]	R406532	R4090070[40]	-	-	R4577503	R4577503
23-123552-004[266]	2-7/8 "	R429218X	R429218X[39]	R406532	R4090070[40]	-	-	R4577503	R4577503
23-122920-002[273]	2-7/8 "	R429218X	R429218X[39]	R406532	R4090070[40]	-	-	R458632	R458632
23-123552-004[266]	2-7/8 "	R429218X	R429218X[39]	R406532	R4090070[40]	-	-	R458632	R458632
23-122920-002[273]	2-7/8 "	R429218X	R429218X[39]	R406532	R4090070[40]	-	-	R458632	R458632
23-122527-002[272]	2-7/8 "	R429218X	R429218X[39]	R406532	R4090070[40]	-	-	R4577503	R4577503
23-123552-004[266]	2-7/8 "	R429218X	R429218X[39]	R406532	R4090070[40]	-	-	R458632	R458632
R44141476[268]	2-7/8 "	R429218X	R429218X[39]	R406532	R4090070[40]	-	-	R458632	R458632
R44141476[268]	2-7/8 "	R429218X	R429218X[39]	R406532	R4090070[40]	-	-	R458632	R458632
R44141858[275]	2-7/8 "	R429218X	R429218X[39]	R406532	R4090070[40]	-	-	R458632	R458632
23-122527-002[272]	2-7/8 "	R429218X	R429218X[39]	R406532	R4090070[40]	-	-	R4577503	R4577503
R44141858[275]	2-7/8 "	R429218X	R429218X[39]	R406532	R4090070[40]	-	-	R4577503	R4577503
R44141476[268]	2-7/8 "	R429218X	R429218X[39]	R406532	R4090070[40]	-	-	R458632	R458632
R44141476[268]	2-7/8 "	R429218X	R429218X[39]	R406532	R4090070[40]	-	-	R4577503	R4577503
23-122920-002[273]	2-7/8 "	R429218X	R429218X[39]	R406532	R4090070[40]	-	-	R458632	R458632
23-122527-002[272]	2-7/8 "	R429218X	R429218X[39]	R406532	R4090070[40]	-	-	R458632	R458632
23-123572-004[271]	2-7/8 "	R429218X	R429218X[39]	R406532	R4090070[40]	-	-	R4577503	R4577503
23-122920-002[273]	2-7/8 "	R429218X	R429218X[39]	R406532	R4090070[40]	-	-	R4577503	R4577503
23-123552-004[266]	2-7/8 "	R429218X	R429218X[39]	R406532	R4090070[40]	-	-	R458632	R458632

MAKE MODEL YEAR AXLE CODE AXLE WEIGHT	AXLE & BRK. TYPE	BRK. MFG.	BRAKE SIZE	FMSI	MERITOR DISC PAD OR BRAKE SHOE	MERITOR GUIDE PIN OR RETURN SPRING KIT	MERITOR CALIPER HWD. KIT OR RETURN SPRING KIT	MERITOR ADJUSTER KIT (LEFT WHEEL)	MERITOR ADJUSTER KIT (RIGHT WHEEL)
ITE(Cont.)									
170, 1700, 1710, 1723, 1724, 1750, 1753, 1754 SERIES CONVENTIONAL CAB, SCHOOL BUS, TILT CAB(Cont.)									
1985									
	Fd	BX		7142 - D225	MD225	R40H5010	R40H5522	NR	NR
	Fd	BX		7142 - D225	MD225	R40H5010	R40H5522	NR	NR
	Fd	BX		7142 - D225	MD225	R40H5010	R40H5522	NR	NR
S1724, S1754 Conventional									
FA73	Fd	BX		7108 - D184	MD184	R40H5010	R40H5519	NR	NR
	Fd	BX		7108 - D184	MD184	R40H5010	R40H5519	NR	NR
	Fd	BX		7108 - D184	MD184	R40H5010	R40H5519	NR	NR
	Fd	BX		7108 - D184	MD184	R40H5010	R40H5519	NR	NR
S1724, S1754 Conventional									
RA29, 30, 42, 44	Rd	BX		7142 - D225	MD225	R40H5010	R40H5522	NR	NR
	Rd	BX		7108 - D184	MD184	R40H5010	R40H5519	NR	NR
	Rd	BX		7142 - D225	MD225	R40H5010	R40H5522	NR	NR
	Rd	BX		7108 - D184	MD184	R40H5010	R40H5519	NR	NR
	Rd	BX		7142 - D225	MD225	R40H5010	R40H5522	NR	NR
	Rd	BX		7108 - D184	MD184	R40H5010	R40H5519	NR	NR
	Rd	BX		7142 - D225	MD225	R40H5010	R40H5522	NR	NR
	Rd	BX		7108 - D184	MD184	R40H5010	R40H5519	NR	NR
	Rd	BX		7142 - D225	MD225	R40H5010	R40H5522	NR	NR
	Rd	BX		7108 - D184	MD184	R40H5010	R40H5519	NR	NR
	Rd	BX		7108 - D184	MD184	R40H5010	R40H5519	NR	NR
	Rd	BX		7142 - D225	MD225	R40H5010	R40H5522	NR	NR
	Rd	BX		7108 - D184	MD184	R40H5010	R40H5519	NR	NR
	Rd	BX		7142 - D225	MD225	R40H5010	R40H5522	NR	NR
	Rd	BX		7142 - D225	MD225	R40H5010	R40H5522	NR	NR
	Rd	BX		7108 - D184	MD184	R40H5010	R40H5519	NR	NR
	Rd	BX		7142 - D225	MD225	R40H5010	R40H5522	NR	NR
	Rd	BX		7142 - D225	MD225	R40H5010	R40H5522	NR	NR
	Rd	BX		7108 - D184	MD184	R40H5010	R40H5519	NR	NR
	Rd	BX		7108 - D184	MD184	R40H5010	R40H5519	NR	NR
	Rd	BX		7142 - D225	MD225	R40H5010	R40H5522	NR	NR
	Rd	BX		7142 - D225	MD225	R40H5010	R40H5522	NR	NR
	Rd	BX		7142 - D225	MD225	R40H5010	R40H5522	NR	NR
	Rd	BX		7142 - D225	MD225	R40H5010	R40H5522	NR	NR
	Rd	BX		7142 - D225	MD225	R40H5010	R40H5522	NR	NR
	Rd	BX		7142 - D225	MD225	R40H5010	R40H5522	NR	NR
	Rd	BX		7108 - D184	MD184	R40H5010	R40H5519	NR	NR
	Rd	BX		7142 - D225	MD225	R40H5010	R40H5522	NR	NR
	Rd	BX		7142 - D225	MD225	R40H5010	R40H5522	NR	NR
	Rd	BX		7142 - D225	MD225	R40H5010	R40H5522	NR	NR
	Rd	BX		7108 - D184	MD184	R40H5010	R40H5519	NR	NR
	Rd	BX		7142 - D225	MD225	R40H5010	R40H5522	NR	NR
1984									
C1710, C1750 Cargostar Tilt Cab									
FA101	Fd	BX		7108 - D184	MD184	R40H5010	R40H5519	NR	NR
	Fd	BX		7108 - D184	MD184	R40H5010	R40H5519	NR	NR
	Fd	BX		7108 - D184	MD184	R40H5010	R40H5519	NR	NR
	Fd	BX		7108 - D184	MD184	R40H5010	R40H5519	NR	NR
	Fd	BX		7108 - D184	MD184	R40H5010	R40H5519	NR	NR
	Fd	BX		7108 - D184	MD184	R40H5010	R40H5519	NR	NR
C1710, C1750 Cargostar Tilt Cab									
FA309, 329, 339	Fd	BX		7142 - D225	MD225	R40H5010	R40H5522	NR	NR
	Fd	BX		7142 - D225	MD225	R40H5010	R40H5522	NR	NR
	Fd	BX		7142 - D225	MD225	R40H5010	R40H5522	NR	NR
	Fd	BX		7142 - D225	MD225	R40H5010	R40H5522	NR	NR
	Fd	BX		7142 - D225	MD225	R40H5010	R40H5522	NR	NR
	Fd	BX		7142 - D225	MD225	R40H5010	R40H5522	NR	NR
	Fd	BX		7142 - D225	MD225	R40H5010	R40H5522	NR	NR
	Fd	BX		7142 - D225	MD225	R40H5010	R40H5522	NR	NR
	Fd	BX		7142 - D225	MD225	R40H5010	R40H5522	NR	NR
	Fd	BX		7142 - D225	MD225	R40H5010	R40H5522	NR	NR

37 - Also available as a New unit

38 - First design, may have external joining tube and uses steel pistons

39 - First design, uses steel pistons.

40 - For chrome plated steel version, use R4090070P

52 - 18" Length

53 - Power Brakes

201 - Steel Piston

266 - 10 Stud, Hat Shaped

267 - 10 Stud, U Shaped

MERITOR DRUM OR ROTOR NO.	CALIPER OR CYLINDER BORE SIZE	MERITOR CALIPER OR WHEEL CYLINDER (LEFT)	MERITOR CALIPER OR WHEEL CYLINDER (RIGHT)	MERITOR CALIPER OR WHEEL CYLINDER REPAIR KIT	MERITOR CALIPER PISTON	MERITOR MASTER CYLINDER	MERITOR MASTER CYLINDER KIT	MERITOR BRAKE HOSE (LEFT)	MERITOR BRAKE HOSE (RIGHT)
									ITE(Cont.)
170, 1700, 1710, 1723, 1724, 1750, 1753, 1754 SERIES CONVENTIONAL CAB, SCHOOL BUS, TILT CAB(Cont.)									
23-122527-002[272]	2-7/8 "	R429218X	R429218X[39]	R406532	R4090070[40]	-	-	R458632	R458632
23-123572-004[271]	2-7/8 "	R429218X	R429218X[39]	R406532	R4090070[40]	-	-	R4577503	R4577503
R44141858[275]	2-7/8 "	R429218X	R429218X[39]	R406532	R4090070[40]	-	-	R4577503	R4577503
23-122527-002[272]	3-3/8 "	R42R55099	R42R55098[37]	R4066780	R4090021[201]	-	-	R458632	R458632
23-122527-002[272]	3-3/8 "	R42R55099	R42R55098[37]	R4066780	R4090021[201]	-	-	R458632	R458632
23-122527-002[272]	3-3/8 "	R42R55099	R42R55098[37]	R4066780	R4090021[201]	-	-	R4577503	R4577503
23-122527-002[272]	3-3/8 "	R42R55099	R42R55098[37]	R4066780	R4090021[201]	-	-	R4577503	R4577503
23-123552-004[266]	2-7/8 "	R429218X	R429218X[39]	R406532	R4090070[40]	-	-	R458634[52]	R458634
R44141608[267]	2-19/32 "	R42R55245	R42R55245[38]	R402235118	R402238231[201]	-	-	R458634[52]	R458634
R44141627[270]	2-7/8 "	R429218X	R429218X[39]	R406532	R4090070[40]	-	-	R458634[52]	R458634
23-123552-004[266]	2-19/32 "	R42R55245	R42R55245[38]	R402235118	R402238231[201]	-	-	R458634[52]	R458634
R44141608[267]	2-7/8 "	R429218X	R429218X[39]	R406532	R4090070[40]	-	-	R458634[52]	R458634
23-123572-004[271]	2-19/32 "	R42R55245	R42R55245[38]	R402235118	R402238231[201]	-	-	R458634[52]	R458634
R44141627[270]	2-7/8 "	R429218X	R429218X[39]	R406532	R4090070[40]	-	-	R458634[52]	R458634
23-123552-004[266]	2-19/32 "	R42R55245	R42R55245[38]	R402235118	R402238231[201]	-	-	R458634[52]	R458634
R44141608[267]	2-7/8 "	R429218X	R429218X[39]	R406532	R4090070[40]	-	-	R458634[52]	R458634
R44141608[267]	2-19/32 "	R42R55245	R42R55245[38]	R402235118	R402238231[201]	-	-	R458634[52]	R458634
23-123572-004[271]	2-19/32 "	R42R55245	R42R55245[38]	R402235118	R402238231[201]	-	-	R458634[52]	R458634
23-123552-004[266]	2-7/8 "	R429218X	R429218X[39]	R406532	R4090070[40]	-	-	R458634[52]	R458634
R44141627[270]	2-19/32 "	R42R55245	R42R55245[38]	R402235118	R402238231[201]	-	-	R458634[52]	R458634
23-123572-004[271]	2-7/8 "	R429218X	R429218X[39]	R406532	R4090070[40]	-	-	R458634[52]	R458634
23-123572-004[271]	2-7/8 "	R429218X	R429218X[39]	R406532	R4090070[40]	-	-	R458634[52]	R458634
23-122527-002[272]	2-19/32 "	R42R55245	R42R55245[38]	R402235118	R402238231[201]	-	-	R458634[52]	R458634
23-123552-004[266]	2-7/8 "	R429218X	R429218X[39]	R406532	R4090070[40]	-	-	R458634[52]	R458634
R44141629[269]	2-7/8 "	R429218X	R429218X[39]	R406532	R4090070[40]	-	-	R458634[52]	R458634
R44141628[269]	2-19/32 "	R42R55245	R42R55245[38]	R402235118	R402238231[201]	-	-	R458634[52]	R458634
R44141629[269]	2-19/32 "	R42R55245	R42R55245[38]	R402235118	R402238231[201]	-	-	R458634[52]	R458634
R44141629[269]	2-7/8 "	R429218X	R429218X[39]	R406532	R4090070[40]	-	-	R458634[52]	R458634
R44141628[269]	2-7/8 "	R429218X	R429218X[39]	R406532	R4090070[40]	-	-	R458634[52]	R458634
R44141628[269]	2-7/8 "	R429218X	R429218X[39]	R406532	R4090070[40]	-	-	R458634[52]	R458634
23-122527-002[272]	2-7/8 "	R429218X	R429218X[39]	R406532	R4090070[40]	-	-	R458634[52]	R458634
R44141627[270]	2-7/8 "	R429218X	R429218X[39]	R406532	R4090070[40]	-	-	R458634[52]	R458634
R44141608[267]	2-7/8 "	R429218X	R429218X[39]	R406532	R4090070[40]	-	-	R458634[52]	R458634
23-123572-004[271]	2-7/8 "	R429218X	R429218X[39]	R406532	R4090070[40]	-	-	R458634[52]	R458634
R44141629[269]	2-19/32 "	R42R55245	R42R55245[38]	R402235118	R402238231[201]	-	-	R458634[52]	R458634
R44141628[269]	2-7/8 "	R429218X	R429218X[39]	R406532	R4090070[40]	-	-	R458634[52]	R458634
23-122527-002[272]	2-7/8 "	R429218X	R429218X[39]	R406532	R4090070[40]	-	-	R458634[52]	R458634
23-122527-002[272]	2-7/8 "	R429218X	R429218X[39]	R406532	R4090070[40]	-	-	R458634[52]	R458634
R44141628[269]	2-19/32 "	R42R55245	R42R55245[38]	R402235118	R402238231[201]	-	-	R458634[52]	R458634
R44141629[269]	2-7/8 "	R429218X	R429218X[39]	R406532	R4090070[40]	-	-	R458634[52]	R458634
R44141858[275]	2-19/32 "	R42R55245	R42R55245[38]	R402235118	R402238231[201]	N/A[53]	-	-	-
23-122920-002[273]	2-19/32 "	R42R55245	R42R55245[38]	R402235118	R402238231[201]	N/A[53]	-	-	-
23-122527-002[272]	2-19/32 "	R42R55245	R42R55245[38]	R402235118	R402238231[201]	N/A[53]	-	-	-
23-123572-004[271]	2-19/32 "	R42R55245	R42R55245[38]	R402235118	R402238231[201]	N/A[53]	-	-	-
23-123552-004[266]	2-19/32 "	R42R55245	R42R55245[38]	R402235118	R402238231[201]	N/A[53]	-	-	-
R44141476[268]	2-19/32 "	R42R55245	R42R55245[38]	R402235118	R402238231[201]	N/A[53]	-	-	-
23-123572-004[271]	2-7/8 "	R429218X	R429218X[39]	R406532	R4090070[40]	N/A[53]	-	-	-
R44141858[275]	2-7/8 "	R429218X	R429218X[39]	R406532	R4090070[40]	N/A[53]	-	-	-
23-123572-004[271]	2-7/8 "	R429218X	R429218X[39]	R406532	R4090070[40]	N/A[53]	-	-	-
R44141476[268]	2-7/8 "	R429218X	R429218X[39]	R406532	R4090070[40]	N/A[53]	-	-	-
23-123552-004[266]	2-7/8 "	R429218X	R429218X[39]	R406532	R4090070[40]	N/A[53]	-	-	-
23-123572-004[271]	2-7/8 "	R429218X	R429218X[39]	R406532	R4090070[40]	N/A[53]	-	-	-
23-122527-002[272]	2-7/8 "	R429218X	R429218X[39]	R406532	R4090070[40]	N/A[53]	-	-	-
23-122920-002[273]	2-7/8 "	R429218X	R429218X[39]	R406532	R4090070[40]	N/A[53]	-	-	-
23-123552-004[266]	2-7/8 "	R429218X	R429218X[39]	R406532	R4090070[40]	N/A[53]	-	-	-
R44141858[275]	2-7/8 "	R429218X	R429218X[39]	R406532	R4090070[40]	N/A[53]	-	-	-

268 - 5 Stud, Hat Shape
269 - 5 Stud, U Shape
270 - 5 Stud, U Shape, .766 Dia. Studs
271 - 6 Stud, Hat Shape
272 - 6 Stud, U Shape
273 - 5 Stud, U Shape, .780 Dia. Studs
275 - 5 Stud, U Shape, .656 Dia. Studs

MAKE MODEL YEAR AXLE CODE AXLE WEIGHT	AXLE & BRK. TYPE	BRK. MFG.	BRAKE SIZE	FMSI	MERITOR DISC PAD OR BRAKE SHOE	MERITOR GUIDE PIN OR RETURN SPRING KIT	MERITOR CALIPER HWD. KIT OR RETURN SPRING KIT	MERITOR ADJUSTER KIT (LEFT WHEEL)	MERITOR ADJUSTER KIT (RIGHT WHEEL)
ITE(Cont.)									
170, 1700, 1710, 1723, 1724, 1750, 1753, 1754 SERIES CONVENTIONAL CAB, SCHOOL BUS, TILT CAB(Cont.)									
1984 C1710, C1750 Cargostar Tilt Cab FA309, 329, 339	Fd	BX		7142 - D225	MD225	R40H5010	R40H5522	NR	NR
	Fd	BX		7142 - D225	MD225	R40H5010	R40H5522	NR	NR
	Fd	BX		7142 - D225	MD225	R40H5010	R40H5522	NR	NR
	Fd	BX		7142 - D225	MD225	R40H5010	R40H5522	NR	NR
	Fd	BX		7142 - D225	MD225	R40H5010	R40H5522	NR	NR
	Fd	BX		7142 - D225	MD225	R40H5010	R40H5522	NR	NR
	Fd	BX		7142 - D225	MD225	R40H5010	R40H5522	NR	NR
	Fd	BX		7142 - D225	MD225	R40H5010	R40H5522	NR	NR
	Fd	BX		7142 - D225	MD225	R40H5010	R40H5522	NR	NR
	Fd	BX		7142 - D225	MD225	R40H5010	R40H5522	NR	NR
	Fd	BX		7142 - D225	MD225	R40H5010	R40H5522	NR	NR
	Fd	BX		7142 - D225	MD225	R40H5010	R40H5522	NR	NR
	Fd	BX		7142 - D225	MD225	R40H5010	R40H5522	NR	NR
	Fd	BX		7142 - D225	MD225	R40H5010	R40H5522	NR	NR
	Fd	BX		7142 - D225	MD225	R40H5010	R40H5522	NR	NR
	Fd	BX		7142 - D225	MD225	R40H5010	R40H5522	NR	NR
	Fd	BX		7142 - D225	MD225	R40H5010	R40H5522	NR	NR
	Fd	BX		7142 - D225	MD225	R40H5010	R40H5522	NR	NR
	Fd	BX		7142 - D225	MD225	R40H5010	R40H5522	NR	NR
	Fd	BX		7142 - D225	MD225	R40H5010	R40H5522	NR	NR
	Fd	BX		7142 - D225	MD225	R40H5010	R40H5522	NR	NR
	Fd	BX		7142 - D225	MD225	R40H5010	R40H5522	NR	NR
	Fd	BX		7142 - D225	MD225	R40H5010	R40H5522	NR	NR
	Fd	BX		7142 - D225	MD225	R40H5010	R40H5522	NR	NR
	Fd	BX		7142 - D225	MD225	R40H5010	R40H5522	NR	NR
	Fd	BX		7142 - D225	MD225	R40H5010	R40H5522	NR	NR
C1710, C1750 Cargostar Tilt Cab RA29, 30, 42, 44	Rd	BX		7108 - D184	MD184	R40H5010	R40H5519	NR	NR
	Rd	BX		7142 - D225	MD225	R40H5010	R40H5522	NR	NR
	Rd	BX		7142 - D225	MD225	R40H5010	R40H5522	NR	NR
	Rd	BX		7142 - D225	MD225	R40H5010	R40H5522	NR	NR
	Rd	BX		7142 - D225	MD225	R40H5010	R40H5522	NR	NR
	Rd	BX		7108 - D184	MD184	R40H5010	R40H5519	NR	NR
	Rd	BX		7108 - D184	MD184	R40H5010	R40H5519	NR	NR
	Rd	BX		7142 - D225	MD225	R40H5010	R40H5522	NR	NR
	Rd	BX		7142 - D225	MD225	R40H5010	R40H5522	NR	NR
	Rd	BX		7142 - D225	MD225	R40H5010	R40H5522	NR	NR
	Rd	BX		7108 - D184	MD184	R40H5010	R40H5519	NR	NR
	Rd	BX		7142 - D225	MD225	R40H5010	R40H5522	NR	NR
	Rd	BX		7108 - D184	MD184	R40H5010	R40H5519	NR	NR
	Rd	BX		7142 - D225	MD225	R40H5010	R40H5522	NR	NR
	Rd	BX		7142 - D225	MD225	R40H5010	R40H5522	NR	NR
	Rd	BX		7108 - D184	MD184	R40H5010	R40H5519	NR	NR
	Rd	BX		7142 - D225	MD225	R40H5010	R40H5522	NR	NR
	Rd	BX		7108 - D184	MD184	R40H5010	R40H5519	NR	NR
	Rd	BX		7142 - D225	MD225	R40H5010	R40H5522	NR	NR
	Rd	BX		7142 - D225	MD225	R40H5010	R40H5522	NR	NR
	Rd	BX		7142 - D225	MD225	R40H5010	R40H5522	NR	NR
	Rd	BX		7142 - D225	MD225	R40H5010	R40H5522	NR	NR
	Rd	BX		7142 - D225	MD225	R40H5010	R40H5522	NR	NR
	Rd	BX		7142 - D225	MD225	R40H5010	R40H5522	NR	NR
	Rd	BX		7142 - D225	MD225	R40H5010	R40H5522	NR	NR
	Rd	BX		7108 - D184	MD184	R40H5010	R40H5519	NR	NR
	Rd	BX		7108 - D184	MD184	R40H5010	R40H5519	NR	NR
	Rd	BX		7142 - D225	MD225	R40H5010	R40H5522	NR	NR
	Rd	BX		7108 - D184	MD184	R40H5010	R40H5519	NR	NR
	Rd	BX		7142 - D225	MD225	R40H5010	R40H5522	NR	NR
	Rd	BX		7142 - D225	MD225	R40H5010	R40H5522	NR	NR
	Rd	BX		7108 - D184	MD184	R40H5010	R40H5519	NR	NR
	Rd	BX		7108 - D184	MD184	R40H5010	R40H5519	NR	NR

38 - First design, may have external joining tube and uses steel pistons
39 - First design, uses steel pistons.
40 - For chrome plated steel version, use R4090070P
53 - Power Brakes
201 - Steel Piston
266 - 10 Stud, Hat Shaped
267 - 10 Stud, U Shaped
268 - 5 Stud, Hat Shape
269 - 5 Stud, U Shape

MERITOR DRUM OR ROTOR NO.	CALIPER OR CYLINDER BORE SIZE	MERITOR CALIPER OR WHEEL CYLINDER (LEFT)	MERITOR CALIPER OR WHEEL CYLINDER (RIGHT)	MERITOR CALIPER OR WHEEL CYLINDER REPAIR KIT	MERITOR CALIPER PISTON	MERITOR MASTER CYLINDER	MERITOR MASTER CYLINDER KIT	MERITOR BRAKE HOSE (LEFT)	MERITOR BRAKE HOSE (RIGHT)
									ITE(Cont.)
170, 1700, 1710, 1723, 1724, 1750, 1753, 1754 SERIES CONVENTIONAL CAB, SCHOOL BUS, TILT CAB(Cont.)									
23-123552-004[266]	2-7/8 "	R429218X	R429218X[39]	R406532	R4090070[40]	N/A[53]	-	-	-
23-122920-002[273]	2-7/8 "	R429218X	R429218X[39]	R406532	R4090070[40]	N/A[53]	-	-	-
R44141858[275]	2-7/8 "	R429218X	R429218X[39]	R406532	R4090070[40]	N/A[53]	-	-	-
R44141476[268]	2-7/8 "	R429218X	R429218X[39]	R406532	R4090070[40]	N/A[53]	-	-	-
23-122920-002[273]	2-7/8 "	R429218X	R429218X[39]	R406532	R4090070[40]	N/A[53]	-	-	-
23-123552-004[266]	2-7/8 "	R429218X	R429218X[39]	R406532	R4090070[40]	N/A[53]	-	-	-
R44141858[275]	2-7/8 "	R429218X	R429218X[39]	R406532	R4090070[40]	N/A[53]	-	-	-
R44141476[268]	2-7/8 "	R429218X	R429218X[39]	R406532	R4090070[40]	N/A[53]	-	-	-
23-122527-002[272]	2-7/8 "	R429218X	R429218X[39]	R406532	R4090070[40]	N/A[53]	-	-	-
23-123552-004[266]	2-7/8 "	R429218X	R429218X[39]	R406532	R4090070[40]	N/A[53]	-	-	-
R44141476[268]	2-7/8 "	R429218X	R429218X[39]	R406532	R4090070[40]	N/A[53]	-	-	-
23-122920-002[273]	2-7/8 "	R429218X	R429218X[39]	R406532	R4090070[40]	N/A[53]	-	-	-
23-123552-004[266]	2-7/8 "	R429218X	R429218X[39]	R406532	R4090070[40]	N/A[53]	-	-	-
23-123572-004[271]	2-7/8 "	R429218X	R429218X[39]	R406532	R4090070[40]	N/A[53]	-	-	-
23-122920-002[273]	2-7/8 "	R429218X	R429218X[39]	R406532	R4090070[40]	N/A[53]	-	-	-
23-122527-002[272]	2-7/8 "	R429218X	R429218X[39]	R406532	R4090070[40]	N/A[53]	-	-	-
23-123572-004[271]	2-7/8 "	R429218X	R429218X[39]	R406532	R4090070[40]	N/A[53]	-	-	-
23-123572-004[271]	2-7/8 "	R429218X	R429218X[39]	R406532	R4090070[40]	N/A[53]	-	-	-
R44141858[275]	2-7/8 "	R429218X	R429218X[39]	R406532	R4090070[40]	N/A[53]	-	-	-
R44141476[268]	2-7/8 "	R429218X	R429218X[39]	R406532	R4090070[40]	N/A[53]	-	-	-
23-122527-002[272]	2-7/8 "	R429218X	R429218X[39]	R406532	R4090070[40]	N/A[53]	-	-	-
23-122527-002[272]	2-7/8 "	R429218X	R429218X[39]	R406532	R4090070[40]	N/A[53]	-	-	-
23-122527-002[272]	2-7/8 "	R429218X	R429218X[39]	R406532	R4090070[40]	N/A[53]	-	-	-
R44141476[268]	2-7/8 "	R429218X	R429218X[39]	R406532	R4090070[40]	N/A[53]	-	-	-
23-122920-002[273]	2-7/8 "	R429218X	R429218X[39]	R406532	R4090070[40]	N/A[53]	-	-	-
R44141858[275]	2-7/8 "	R429218X	R429218X[39]	R406532	R4090070[40]	N/A[53]	-	-	-
R44141628[269]	2-19/32 "	R42R55245	R42R55245[38]	R402235118	R402238231[201]	-	-	-	-
R44141608[267]	2-7/8 "	R429218X	R429218X[39]	R406532	R4090070[40]	-	-	-	-
23-123572-004[271]	2-7/8 "	R429218X	R429218X[39]	R406532	R4090070[40]	-	-	-	-
23-123572-004[271]	2-7/8 "	R429218X	R429218X[39]	R406532	R4090070[40]	-	-	-	-
R44141629[269]	2-7/8 "	R429218X	R429218X[39]	R406532	R4090070[40]	-	-	-	-
23-123552-004[266]	2-19/32 "	R42R55245	R42R55245[38]	R402235118	R402238231[201]	-	-	-	-
R44141629[269]	2-19/32 "	R42R55245	R42R55245[38]	R402235118	R402238231[201]	-	-	-	-
R44141627[270]	2-7/8 "	R429218X	R429218X[39]	R406532	R4090070[40]	-	-	-	-
R44141627[270]	2-7/8 "	R429218X	R429218X[39]	R406532	R4090070[40]	-	-	-	-
R44141608[267]	2-7/8 "	R429218X	R429218X[39]	R406532	R4090070[40]	-	-	-	-
R44141608[267]	2-19/32 "	R42R55245	R42R55245[38]	R402235118	R402238231[201]	-	-	-	-
23-122527-002[272]	2-7/8 "	R429218X	R429218X[39]	R406532	R4090070[40]	-	-	-	-
23-123572-004[271]	2-19/32 "	R42R55245	R42R55245[38]	R402235118	R402238231[201]	-	-	-	-
R44141628[269]	2-7/8 "	R429218X	R429218X[39]	R406532	R4090070[40]	-	-	-	-
23-123572-004[271]	2-7/8 "	R429218X	R429218X[39]	R406532	R4090070[40]	-	-	-	-
R44141628[269]	2-19/32 "	R42R55245	R42R55245[38]	R402235118	R402238231[201]	-	-	-	-
R44141628[269]	2-7/8 "	R429218X	R429218X[39]	R406532	R4090070[40]	-	-	-	-
23-122527-002[272]	2-19/32 "	R42R55245	R42R55245[38]	R402235118	R402238231[201]	-	-	-	-
R44141627[270]	2-7/8 "	R429218X	R429218X[39]	R406532	R4090070[40]	-	-	-	-
23-123552-004[266]	2-7/8 "	R429218X	R429218X[39]	R406532	R4090070[40]	-	-	-	-
R44141629[269]	2-7/8 "	R429218X	R429218X[39]	R406532	R4090070[40]	-	-	-	-
23-122527-002[272]	2-7/8 "	R429218X	R429218X[39]	R406532	R4090070[40]	-	-	-	-
23-123552-004[266]	2-7/8 "	R429218X	R429218X[39]	R406532	R4090070[40]	-	-	-	-
R44141608[267]	2-7/8 "	R429218X	R429218X[39]	R406532	R4090070[40]	-	-	-	-
R44141628[269]	2-7/8 "	R429218X	R429218X[39]	R406532	R4090070[40]	-	-	-	-
R44141629[269]	2-19/32 "	R42R55245	R42R55245[38]	R402235118	R402238231[201]	-	-	-	-
23-123572-004[271]	2-19/32 "	R42R55245	R42R55245[38]	R402235118	R402238231[201]	-	-	-	-
23-123552-004[266]	2-7/8 "	R429218X	R429218X[39]	R406532	R4090070[40]	-	-	-	-
23-123552-004[266]	2-19/32 "	R42R55245	R42R55245[38]	R402235118	R402238231[201]	-	-	-	-
R44141629[269]	2-7/8 "	R429218X	R429218X[39]	R406532	R4090070[40]	-	-	-	-
23-122527-002[272]	2-7/8 "	R429218X	R429218X[39]	R406532	R4090070[40]	-	-	-	-
R44141608[267]	2-19/32 "	R42R55245	R42R55245[38]	R402235118	R402238231[201]	-	-	-	-
R44141627[270]	2-19/32 "	R42R55245	R42R55245[38]	R402235118	R402238231[201]	-	-	-	-

270 - 5 Stud, U Shape, .766 Dia. Studs

271 - 6 Stud, Hat Shape

272 - 6 Stud, U Shape

273 - 5 Stud, U Shape, .780 Dia. Studs

275 - 5 Stud, U Shape, .656 Dia. Studs

MAKE MODEL YEAR AXLE CODE AXLE WEIGHT	AXLE & BRK. TYPE	BRK. MFG.	BRAKE SIZE	FMSI	MERITOR DISC PAD OR BRAKE SHOE	MERITOR GUIDE PIN OR RETURN SPRING KIT	MERITOR CALIPER HWD. KIT OR RETURN SPRING KIT	MERITOR ADJUSTER KIT (LEFT WHEEL)	MERITOR ADJUSTER KIT (RIGHT WHEEL)
ITE(Cont.)									
170, 1700, 1710, 1723, 1724, 1750, 1753, 1754 SERIES CONVENTIONAL CAB, SCHOOL BUS, TILT CAB(Cont.)									
1984									
S1723, S1753 School Bus	Fd	BX		7108 - D184	MD184	R40H5010	R40H5519	NR	NR
	Fd	BX		7108 - D184	MD184	R40H5010	R40H5519	NR	NR
	Fd	BX		7108 - D184	MD184	R40H5010	R40H5519	NR	NR
	Fd	BX		7108 - D184	MD184	R40H5010	R40H5519	NR	NR
	Fd	BX		7108 - D184	MD184	R40H5010	R40H5519	NR	NR
	Fd	BX		7108 - D184	MD184	R40H5010	R40H5519	NR	NR
	Fd	BX		7108 - D184	MD184	R40H5010	R40H5519	NR	NR
	Fd	BX		7108 - D184	MD184	R40H5010	R40H5519	NR	NR
	Fd	BX		7108 - D184	MD184	R40H5010	R40H5519	NR	NR
	Fd	BX		7108 - D184	MD184	R40H5010	R40H5519	NR	NR
	Fd	BX		7108 - D184	MD184	R40H5010	R40H5519	NR	NR
	Fd	BX		7108 - D184	MD184	R40H5010	R40H5519	NR	NR
	Fd	BX		7108 - D184	MD184	R40H5010	R40H5519	NR	NR
	Fd	BX		7108 - D184	MD184	R40H5010	R40H5519	NR	NR
	Fd	BX		7108 - D184	MD184	R40H5010	R40H5519	NR	NR
	Fd	BX		7108 - D184	MD184	R40H5010	R40H5519	NR	NR
	Fd	BX		7108 - D184	MD184	R40H5010	R40H5519	NR	NR
	Fd	BX		7108 - D184	MD184	R40H5010	R40H5519	NR	NR
	Fd	BX		7108 - D184	MD184	R40H5010	R40H5519	NR	NR
	Fd	BX		7108 - D184	MD184	R40H5010	R40H5519	NR	NR
	Fd	BX		7108 - D184	MD184	R40H5010	R40H5519	NR	NR
	Fd	BX		7108 - D184	MD184	R40H5010	R40H5519	NR	NR
	Fd	BX		7108 - D184	MD184	R40H5010	R40H5519	NR	NR
	Fd	BX		7108 - D184	MD184	R40H5010	R40H5519	NR	NR
	Fd	BX		7108 - D184	MD184	R40H5010	R40H5519	NR	NR
	Fd	BX		7108 - D184	MD184	R40H5010	R40H5519	NR	NR
	Fd	BX		7108 - D184	MD184	R40H5010	R40H5519	NR	NR
	Fd	BX		7108 - D184	MD184	R40H5010	R40H5519	NR	NR
	Fd	BX		7108 - D184	MD184	R40H5010	R40H5519	NR	NR
	Fd	BX		7108 - D184	MD184	R40H5010	R40H5519	NR	NR
	Fd	BX		7108 - D184	MD184	R40H5010	R40H5519	NR	NR
	Fd	BX		7108 - D184	MD184	R40H5010	R40H5519	NR	NR
	Fd	BX		7108 - D184	MD184	R40H5010	R40H5519	NR	NR
	Fd	BX		7108 - D184	MD184	R40H5010	R40H5519	NR	NR
	Fd	BX		7108 - D184	MD184	R40H5010	R40H5519	NR	NR
	Fd	BX		7108 - D184	MD184	R40H5010	R40H5519	NR	NR
	Fd	BX		7108 - D184	MD184	R40H5010	R40H5519	NR	NR
	Fd	BX		7108 - D184	MD184	R40H5010	R40H5519	NR	NR
	Fd	BX		7108 - D184	MD184	R40H5010	R40H5519	NR	NR
	Fd	BX		7108 - D184	MD184	R40H5010	R40H5519	NR	NR
S1723, S1753 School Bus FA101	Fd	BX		7108 - D184	MD184	R40H5010	R40H5519	NR	NR
	Fd	BX		7108 - D184	MD184	R40H5010	R40H5519	NR	NR
	Fd	BX		7108 - D184	MD184	R40H5010	R40H5519	NR	NR
	Fd	BX		7108 - D184	MD184	R40H5010	R40H5519	NR	NR
	Fd	BX		7108 - D184	MD184	R40H5010	R40H5519	NR	NR
	Fd	BX		7108 - D184	MD184	R40H5010	R40H5519	NR	NR
	Fd	BX		7108 - D184	MD184	R40H5010	R40H5519	NR	NR
	Fd	BX		7108 - D184	MD184	R40H5010	R40H5519	NR	NR
	Fd	BX		7108 - D184	MD184	R40H5010	R40H5519	NR	NR
	Fd	BX		7108 - D184	MD184	R40H5010	R40H5519	NR	NR
	Fd	BX		7108 - D184	MD184	R40H5010	R40H5519	NR	NR
	Fd	BX		7108 - D184	MD184	R40H5010	R40H5519	NR	NR
	Fd	BX		7108 - D184	MD184	R40H5010	R40H5519	NR	NR
	Fd	BX		7108 - D184	MD184	R40H5010	R40H5519	NR	NR
	Fd	BX		7108 - D184	MD184	R40H5010	R40H5519	NR	NR
	Fd	BX		7108 - D184	MD184	R40H5010	R40H5519	NR	NR
	Fd	BX		7108 - D184	MD184	R40H5010	R40H5519	NR	NR
	Fd	BX		7108 - D184	MD184	R40H5010	R40H5519	NR	NR
	Fd	BX		7108 - D184	MD184	R40H5010	R40H5519	NR	NR
	Fd	BX		7108 - D184	MD184	R40H5010	R40H5519	NR	NR
	Fd	BX		7108 - D184	MD184	R40H5010	R40H5519	NR	NR
	Fd	BX		7108 - D184	MD184	R40H5010	R40H5519	NR	NR
	Fd	BX		7108 - D184	MD184	R40H5010	R40H5519	NR	NR
	Fd	BX		7108 - D184	MD184	R40H5010	R40H5519	NR	NR
	Fd	BX		7108 - D184	MD184	R40H5010	R40H5519	NR	NR
	Fd	BX		7108 - D184	MD184	R40H5010	R40H5519	NR	NR
	Fd	BX		7108 - D184	MD184	R40H5010	R40H5519	NR	NR

37 - Also available as a New unit

38 - First design, may have external joining tube and uses steel pistons

53 - Power Brakes

201 - Steel Piston

266 - 10 Stud, Hat Shaped

268 - 5 Stud, Hat Shape

271 - 6 Stud, Hat Shape

272 - 6 Stud, U Shape

273 - 5 Stud, U Shape, .780 Dia. Studs

MERITOR DRUM OR ROTOR NO.	CALIPER OR CYLINDER BORE SIZE	MERITOR CALIPER OR WHEEL CYLINDER (LEFT)	MERITOR CALIPER OR WHEEL CYLINDER (RIGHT)	MERITOR CALIPER OR WHEEL CYLINDER REPAIR KIT	MERITOR CALIPER PISTON	MERITOR MASTER CYLINDER	MERITOR MASTER CYLINDER KIT	MERITOR BRAKE HOSE (LEFT)	MERITOR BRAKE HOSE (RIGHT)
									ITE(Cont.)
170, 1700, 1710, 1723, 1724, 1750, 1753, 1754 SERIES CONVENTIONAL CAB, SCHOOL BUS, TILT CAB(Cont.)									
23-123572-004[271]	3-3/8 "	R42R55099	R42R55098[37]	R4066780	R4090021[201]	R4111993[302]	R4122386	R4577503	R4577503
R44141476[268]	3-3/8 "	R42R55099	R42R55098[37]	R4066780	R4090021[201]	R4111993[302]	R4122386	R458632	R458632
23-123552-004[266]	3-3/8 "	R42R55099	R42R55098[37]	R4066780	R4090021[201]	R4111993[302]	R4122386	R4577503	R4577503
R44141858[275]	3-3/8 "	R42R55099	R42R55098[37]	R4066780	R4090021[201]	N/A[53]	-	R4577503	R4577503
R44141858[275]	3-3/8 "	R42R55099	R42R55098[37]	R4066780	R4090021[201]	N/A[53]	-	R458632	R458632
23-122920-002[273]	3-3/8 "	R42R55099	R42R55098[37]	R4066780	R4090021[201]	N/A[53]	-	R458632	R458632
R44141858[275]	3-3/8 "	R42R55099	R42R55098[37]	R4066780	R4090021[201]	N/A[53]	-	R4577503	R4577503
23-123572-004[271]	3-3/8 "	R42R55099	R42R55098[37]	R4066780	R4090021[201]	N/A[53]	-	R458632	R458632
23-122920-002[273]	3-3/8 "	R42R55099	R42R55098[37]	R4066780	R4090021[201]	R4111993[302]	R4122386	R458632	R458632
23-123552-004[266]	3-3/8 "	R42R55099	R42R55098[37]	R4066780	R4090021[201]	N/A[53]	-	R458632	R458632
R44141476[268]	3-3/8 "	R42R55099	R42R55098[37]	R4066780	R4090021[201]	R4111993[302]	R4122386	R4577503	R4577503
23-123552-004[266]	3-3/8 "	R42R55099	R42R55098[37]	R4066780	R4090021[201]	R4111993[302]	R4122386	R458632	R458632
R44141476[268]	3-3/8 "	R42R55099	R42R55098[37]	R4066780	R4090021[201]	R4111993[302]	R4122386	R4577503	R4577503
23-123552-004[266]	3-3/8 "	R42R55099	R42R55098[37]	R4066780	R4090021[201]	R4111993[302]	R4122386	R4577503	R4577503
23-122920-002[273]	3-3/8 "	R42R55099	R42R55098[37]	R4066780	R4090021[201]	N/A[53]	-	R458632	R458632
R44141858[275]	3-3/8 "	R42R55099	R42R55098[37]	R4066780	R4090021[201]	N/A[53]	-	R458632	R458632
23-123552-004[266]	3-3/8 "	R42R55099	R42R55098[37]	R4066780	R4090021[201]	N/A[53]	-	R458632	R458632
23-123572-004[271]	3-3/8 "	R42R55099	R42R55098[37]	R4066780	R4090021[201]	N/A[53]	-	R4577503	R4577503
R44141476[268]	3-3/8 "	R42R55099	R42R55098[37]	R4066780	R4090021[201]	N/A[53]	-	R458632	R458632
R44141858[275]	3-3/8 "	R42R55099	R42R55098[37]	R4066780	R4090021[201]	R4111993[302]	R4122386	R458632	R458632
R44141476[268]	3-3/8 "	R42R55099	R42R55098[37]	R4066780	R4090021[201]	R4111993[302]	R4122386	R458632	R458632
23-122920-002[273]	3-3/8 "	R42R55099	R42R55098[37]	R4066780	R4090021[201]	R4111993[302]	R4122386	R4577503	R4577503
23-123552-004[266]	3-3/8 "	R42R55099	R42R55098[37]	R4066780	R4090021[201]	N/A[53]	-	R4577503	R4577503
23-123552-004[266]	3-3/8 "	R42R55099	R42R55098[37]	R4066780	R4090021[201]	N/A[53]	-	R4577503	R4577503
23-122920-002[273]	3-3/8 "	R42R55099	R42R55098[37]	R4066780	R4090021[201]	R4111993[302]	R4122386	R458632	R458632
23-123572-004[271]	3-3/8 "	R42R55099	R42R55098[37]	R4066780	R4090021[201]	R4111993[302]	R4122386	R458632	R458632
R44141476[268]	3-3/8 "	R42R55099	R42R55098[37]	R4066780	R4090021[201]	N/A[53]	-	R4577503	R4577503
R44141476[268]	3-3/8 "	R42R55099	R42R55098[37]	R4066780	R4090021[201]	N/A[53]	-	R458632	R458632
R44141858[275]	3-3/8 "	R42R55099	R42R55098[37]	R4066780	R4090021[201]	R4111993[302]	R4122386	R4577503	R4577503
23-123572-004[271]	3-3/8 "	R42R55099	R42R55098[37]	R4066780	R4090021[201]	N/A[53]	-	R4577503	R4577503
23-122920-002[273]	3-3/8 "	R42R55099	R42R55098[37]	R4066780	R4090021[201]	N/A[53]	-	R4577503	R4577503
23-123572-004[271]	3-3/8 "	R42R55099	R42R55098[37]	R4066780	R4090021[201]	N/A[53]	-	R458632	R458632
R44141858[275]	3-3/8 "	R42R55099	R42R55098[37]	R4066780	R4090021[201]	R4111993[302]	R4122386	R458632	R458632
23-122920-002[273]	3-3/8 "	R42R55099	R42R55098[37]	R4066780	R4090021[201]	N/A[53]	-	R4577503	R4577503
R44141858[275]	3-3/8 "	R42R55099	R42R55098[37]	R4066780	R4090021[201]	R4111993[302]	R4122386	R4577503	R4577503
23-123552-004[266]	3-3/8 "	R42R55099	R42R55098[37]	R4066780	R4090021[201]	R4111993[302]	R4122386	R458632	R458632
23-122920-002[273]	3-3/8 "	R42R55099	R42R55098[37]	R4066780	R4090021[201]	R4111993[302]	R4122386	R4577503	R4577503
R44141476[268]	3-3/8 "	R42R55099	R42R55098[37]	R4066780	R4090021[201]	N/A[53]	-	R4577503	R4577503
23-123572-004[271]	3-3/8 "	R42R55099	R42R55098[37]	R4066780	R4090021[201]	R4111993[302]	R4122386	R458632	R458632
23-123572-004[271]	3-3/8 "	R42R55099	R42R55098[37]	R4066780	R4090021[201]	R4111993[302]	R4122386	R4577503	R4577503
23-122527-002[272]	2-19/32 "	R42R55245	R42R55245[38]	R402235118	R402238231[201]	R4111993[302]	R4122386	R4577503	R4577503
R44141476[268]	2-19/32 "	R42R55245	R42R55245[38]	R402235118	R402238231[201]	R4111993[302]	R4122386	R4577503	R4577503
23-122527-002[272]	2-19/32 "	R42R55245	R42R55245[38]	R402235118	R402238231[201]	N/A[53]	-	R458632	R458632
23-123552-004[266]	2-19/32 "	R42R55245	R42R55245[38]	R402235118	R402238231[201]	R4111993[302]	R4122386	R458632	R458632
23-123552-004[266]	2-19/32 "	R42R55245	R42R55245[38]	R402235118	R402238231[201]	N/A[53]	-	R4577503	R4577503
R44141858[275]	2-19/32 "	R42R55245	R42R55245[38]	R402235118	R402238231[201]	R4111993[302]	R4122386	R458632	R458632
23-123552-004[266]	2-19/32 "	R42R55245	R42R55245[38]	R402235118	R402238231[201]	N/A[53]	-	R458632	R458632
23-122920-002[273]	2-19/32 "	R42R55245	R42R55245[38]	R402235118	R402238231[201]	R4111993[302]	R4122386	R4577503	R4577503
23-123572-004[271]	2-19/32 "	R42R55245	R42R55245[38]	R402235118	R402238231[201]	R4111993[302]	R4122386	R4577503	R4577503
R44141476[268]	2-19/32 "	R42R55245	R42R55245[38]	R402235118	R402238231[201]	R4111993[302]	R4122386	R458632	R458632
R44141476[268]	2-19/32 "	R42R55245	R42R55245[38]	R402235118	R402238231[201]	N/A[53]	-	R4577503	R4577503
23-123572-004[271]	2-19/32 "	R42R55245	R42R55245[38]	R402235118	R402238231[201]	R4111993[302]	R4122386	R458632	R458632
R44141858[275]	2-19/32 "	R42R55245	R42R55245[38]	R402235118	R402238231[201]	N/A[53]	-	R4577503	R4577503
23-122920-002[273]	2-19/32 "	R42R55245	R42R55245[38]	R402235118	R402238231[201]	N/A[53]	-	R458632	R458632
R44141858[275]	2-19/32 "	R42R55245	R42R55245[38]	R402235118	R402238231[201]	N/A[53]	-	R458632	R458632
23-122527-002[272]	2-19/32 "	R42R55245	R42R55245[38]	R402235118	R402238231[201]	N/A[53]	-	R4577503	R4577503
R44141476[268]	2-19/32 "	R42R55245	R42R55245[38]	R402235118	R402238231[201]	N/A[53]	-	R458632	R458632
R44141858[275]	2-19/32 "	R42R55245	R42R55245[38]	R402235118	R402238231[201]	R4111993[302]	R4122386	R4577503	R4577503
23-122920-002[273]	2-19/32 "	R42R55245	R42R55245[38]	R402235118	R402238231[201]	N/A[53]	-	R4577503	R4577503
23-122920-002[273]	2-19/32 "	R42R55245	R42R55245[38]	R402235118	R402238231[201]	R4111993[302]	R4122386	R458632	R458632
23-123572-004[271]	2-19/32 "	R42R55245	R42R55245[38]	R402235118	R402238231[201]	N/A[53]	-	R4577503	R4577503
23-123552-004[266]	2-19/32 "	R42R55245	R42R55245[38]	R402235118	R402238231[201]	R4111993[302]	R4122386	R4577503	R4577503

275 - 5 Stud, U Shape, .656 Dia. Studs

302 - Power Brakes, Dual System

MAKE MODEL YEAR AXLE CODE AXLE WEIGHT	AXLE & BRK. TYPE	BRK. MFG.	BRAKE SIZE	FMSI	MERITOR DISC PAD OR BRAKE SHOE	MERITOR GUIDE PIN OR RETURN SPRING KIT	MERITOR CALIPER HWD. KIT OR RETURN SPRING KIT	MERITOR ADJUSTER KIT (LEFT WHEEL)	MERITOR ADJUSTER KIT (RIGHT WHEEL)
ITE(Cont.)									
170, 1700, 1710, 1723, 1724, 1750, 1753, 1754 SERIES CONVENTIONAL CAB, SCHOOL BUS, TILT CAB(Cont.)									
1984									
	Fd	BX		7108 - D184	MD184	R40H5010	R40H5519	NR	NR
	Fd	BX		7108 - D184	MD184	R40H5010	R40H5519	NR	NR
S1723, S1753 School Bus									
FA309, 329, 339	Fd	BX		7142 - D225	MD225	R40H5010	R40H5522	NR	NR
	Fd	BX		7142 - D225	MD225	R40H5010	R40H5522	NR	NR
	Fd	BX		7142 - D225	MD225	R40H5010	R40H5522	NR	NR
	Fd	BX		7142 - D225	MD225	R40H5010	R40H5522	NR	NR
	Fd	BX		7142 - D225	MD225	R40H5010	R40H5522	NR	NR
	Fd	BX		7142 - D225	MD225	R40H5010	R40H5522	NR	NR
	Fd	BX		7142 - D225	MD225	R40H5010	R40H5522	NR	NR
	Fd	BX		7142 - D225	MD225	R40H5010	R40H5522	NR	NR
	Fd	BX		7142 - D225	MD225	R40H5010	R40H5522	NR	NR
	Fd	BX		7142 - D225	MD225	R40H5010	R40H5522	NR	NR
	Fd	BX		7142 - D225	MD225	R40H5010	R40H5522	NR	NR
	Fd	BX		7142 - D225	MD225	R40H5010	R40H5522	NR	NR
	Fd	BX		7142 - D225	MD225	R40H5010	R40H5522	NR	NR
	Fd	BX		7142 - D225	MD225	R40H5010	R40H5522	NR	NR
	Fd	BX		7142 - D225	MD225	R40H5010	R40H5522	NR	NR
	Fd	BX		7142 - D225	MD225	R40H5010	R40H5522	NR	NR
	Fd	BX		7142 - D225	MD225	R40H5010	R40H5522	NR	NR
	Fd	BX		7142 - D225	MD225	R40H5010	R40H5522	NR	NR
	Fd	BX		7142 - D225	MD225	R40H5010	R40H5522	NR	NR
	Fd	BX		7142 - D225	MD225	R40H5010	R40H5522	NR	NR
	Fd	BX		7142 - D225	MD225	R40H5010	R40H5522	NR	NR
	Fd	BX		7142 - D225	MD225	R40H5010	R40H5522	NR	NR
	Fd	BX		7142 - D225	MD225	R40H5010	R40H5522	NR	NR
	Fd	BX		7142 - D225	MD225	R40H5010	R40H5522	NR	NR
	Fd	BX		7142 - D225	MD225	R40H5010	R40H5522	NR	NR
	Fd	BX		7142 - D225	MD225	R40H5010	R40H5522	NR	NR
	Fd	BX		7142 - D225	MD225	R40H5010	R40H5522	NR	NR
	Fd	BX		7142 - D225	MD225	R40H5010	R40H5522	NR	NR
	Fd	BX		7142 - D225	MD225	R40H5010	R40H5522	NR	NR
	Fd	BX		7142 - D225	MD225	R40H5010	R40H5522	NR	NR
	Fd	BX		7142 - D225	MD225	R40H5010	R40H5522	NR	NR
	Fd	BX		7142 - D225	MD225	R40H5010	R40H5522	NR	NR
	Fd	BX		7142 - D225	MD225	R40H5010	R40H5522	NR	NR
	Fd	BX		7142 - D225	MD225	R40H5010	R40H5522	NR	NR
	Fd	BX		7142 - D225	MD225	R40H5010	R40H5522	NR	NR
	Fd	BX		7142 - D225	MD225	R40H5010	R40H5522	NR	NR
	Fd	BX		7142 - D225	MD225	R40H5010	R40H5522	NR	NR
	Fd	BX		7142 - D225	MD225	R40H5010	R40H5522	NR	NR
	Fd	BX		7142 - D225	MD225	R40H5010	R40H5522	NR	NR
	Fd	BX		7142 - D225	MD225	R40H5010	R40H5522	NR	NR
	Fd	BX		7142 - D225	MD225	R40H5010	R40H5522	NR	NR
	Fd	BX		7142 - D225	MD225	R40H5010	R40H5522	NR	NR
	Fd	BX		7142 - D225	MD225	R40H5010	R40H5522	NR	NR
	Fd	BX		7142 - D225	MD225	R40H5010	R40H5522	NR	NR
	Fd	BX		7142 - D225	MD225	R40H5010	R40H5522	NR	NR
	Fd	BX		7142 - D225	MD225	R40H5010	R40H5522	NR	NR
	Fd	BX		7142 - D225	MD225	R40H5010	R40H5522	NR	NR
	Fd	BX		7142 - D225	MD225	R40H5010	R40H5522	NR	NR
	Fd	BX		7142 - D225	MD225	R40H5010	R40H5522	NR	NR
	Fd	BX		7142 - D225	MD225	R40H5010	R40H5522	NR	NR
	Fd	BX		7142 - D225	MD225	R40H5010	R40H5522	NR	NR
	Fd	BX		7142 - D225	MD225	R40H5010	R40H5522	NR	NR
	Fd	BX		7142 - D225	MD225	R40H5010	R40H5522	NR	NR
	Fd	BX		7142 - D225	MD225	R40H5010	R40H5522	NR	NR
	Fd	BX		7142 - D225	MD225	R40H5010	R40H5522	NR	NR
	Fd	BX		7142 - D225	MD225	R40H5010	R40H5522	NR	NR
	Fd	BX		7142 - D225	MD225	R40H5010	R40H5522	NR	NR
	Fd	BX		7142 - D225	MD225	R40H5010	R40H5522	NR	NR
	Fd	BX		7142 - D225	MD225	R40H5010	R40H5522	NR	NR
	Fd	BX		7142 - D225	MD225	R40H5010	R40H5522	NR	NR
	Fd	BX		7142 - D225	MD225	R40H5010	R40H5522	NR	NR
	Fd	BX		7142 - D225	MD225	R40H5010	R40H5522	NR	NR
	Fd	BX		7142 - D225	MD225	R40H5010	R40H5522	NR	NR
	Fd	BX		7142 - D225	MD225	R40H5010	R40H5522	NR	NR

38 - First design, may have external joining tube and uses steel pistons
39 - First design, uses steel pistons.
40 - For chrome plated steel version, use R4090070P
53 - Power Brakes
201 - Steel Piston
266 - 10 Stud, Hat Shaped
268 - 5 Stud, Hat Shape
271 - 6 Stud, Hat Shape
272 - 6 Stud, U Shape

MERITOR DRUM OR ROTOR NO.	CALIPER OR CYLINDER BORE SIZE	MERITOR CALIPER OR WHEEL CYLINDER (LEFT)	MERITOR CALIPER OR WHEEL CYLINDER (RIGHT)	MERITOR CALIPER OR WHEEL CYLINDER REPAIR KIT	MERITOR CALIPER PISTON	MERITOR MASTER CYLINDER	MERITOR MASTER CYLINDER KIT	MERITOR BRAKE HOSE (LEFT)	MERITOR BRAKE HOSE (RIGHT)
									ITE(Cont.)
170, 1700, 1710, 1723, 1724, 1750, 1753, 1754 SERIES CONVENTIONAL CAB, SCHOOL BUS, TILT CAB(Cont.)									
23-122527-002[272]	2-19/32 "	R42R55245	R42R55245[38]	R402235118	R402238231[201]	R4111993[302]	R4122386	R458632	R458632
23-123572-004[271]	2-19/32 "	R42R55245	R42R55245[38]	R402235118	R402238231[201]	N/A[53]	-	R458632	R458632
23-122920-002[273]	2-7/8 "	R429218X	R429218X[39]	R406532	R4090070[40]	N/A[53]	-	R4577503	R4577503
23-122920-002[273]	2-7/8 "	R429218X	R429218X[39]	R406532	R4090070[40]	R4111993[302]	R4122386	R458632	R458632
R44141858[275]	2-7/8 "	R429218X	R429218X[39]	R406532	R4090070[40]	N/A[53]	-	R458632	R458632
R44141476[268]	2-7/8 "	R429218X	R429218X[39]	R406532	R4090070[40]	N/A[53]	-	R458632	R458632
23-122920-002[273]	2-7/8 "	R429218X	R429218X[39]	R406532	R4090070[40]	N/A[53]	-	R4577503	R4577503
23-122920-002[273]	2-7/8 "	R429218X	R429218X[39]	R406532	R4090070[40]	R4111993[302]	R4122386	R458632	R458632
23-123572-004[271]	2-7/8 "	R429218X	R429218X[39]	R406532	R4090070[40]	R4111993[302]	R4122386	R4577503	R4577503
R44141858[275]	2-7/8 "	R429218X	R429218X[39]	R406532	R4090070[40]	N/A[53]	-	R458632	R458632
23-123552-004[266]	2-7/8 "	R429218X	R429218X[39]	R406532	R4090070[40]	R4111993[302]	R4122386	R458632	R458632
R44141476[268]	2-7/8 "	R429218X	R429218X[39]	R406532	R4090070[40]	R4111993[302]	R4122386	R4577503	R4577503
23-122527-002[272]	2-7/8 "	R429218X	R429218X[39]	R406532	R4090070[40]	R4111993[302]	R4122386	R458632	R458632
23-123572-004[271]	2-7/8 "	R429218X	R429218X[39]	R406532	R4090070[40]	N/A[53]	-	R4577503	R4577503
23-122920-002[273]	2-7/8 "	R429218X	R429218X[39]	R406532	R4090070[40]	R4111993[302]	R4122386	R4577503	R4577503
R44141476[268]	2-7/8 "	R429218X	R429218X[39]	R406532	R4090070[40]	N/A[53]	-	R4577503	R4577503
23-123572-004[271]	2-7/8 "	R429218X	R429218X[39]	R406532	R4090070[40]	R4111993[302]	R4122386	R458632	R458632
23-123572-004[271]	2-7/8 "	R429218X	R429218X[39]	R406532	R4090070[40]	N/A[53]	-	R458632	R458632
23-122527-002[272]	2-7/8 "	R429218X	R429218X[39]	R406532	R4090070[40]	N/A[53]	-	R4577503	R4577503
R44141476[268]	2-7/8 "	R429218X	R429218X[39]	R406532	R4090070[40]	N/A[53]	-	R4577503	R4577503
R44141858[275]	2-7/8 "	R429218X	R429218X[39]	R406532	R4090070[40]	R4111993[302]	R4122386	R458632	R458632
R44141858[275]	2-7/8 "	R429218X	R429218X[39]	R406532	R4090070[40]	R4111993[302]	R4122386	R4577503	R4577503
23-122527-002[272]	2-7/8 "	R429218X	R429218X[39]	R406532	R4090070[40]	R4111993[302]	R4122386	R458632	R458632
23-123552-004[266]	2-7/8 "	R429218X	R429218X[39]	R406532	R4090070[40]	N/A[53]	-	R458632	R458632
23-122920-002[273]	2-7/8 "	R429218X	R429218X[39]	R406532	R4090070[40]	R4111993[302]	R4122386	R458632	R458632
23-123552-004[266]	2-7/8 "	R429218X	R429218X[39]	R406532	R4090070[40]	N/A[53]	-	R4577503	R4577503
23-122527-002[272]	2-7/8 "	R429218X	R429218X[39]	R406532	R4090070[40]	R4111993[302]	R4122386	R458632	R458632
23-122527-002[272]	2-7/8 "	R429218X	R429218X[39]	R406532	R4090070[40]	N/A[53]	-	R4577503	R4577503
23-123552-004[266]	2-7/8 "	R429218X	R429218X[39]	R406532	R4090070[40]	N/A[53]	-	R458632	R458632
R44141476[268]	2-7/8 "	R429218X	R429218X[39]	R406532	R4090070[40]	R4111993[302]	R4122386	R4577503	R4577503
R44141476[268]	2-7/8 "	R429218X	R429218X[39]	R406532	R4090070[40]	R4111993[302]	R4122386	R458632	R458632
R44141476[268]	2-7/8 "	R429218X	R429218X[39]	R406532	R4090070[40]	R4111993[302]	R4122386	R4577503	R4577503
23-123572-004[271]	2-7/8 "	R429218X	R429218X[39]	R406532	R4090070[40]	N/A[53]	-	R4577503	R4577503
23-122527-002[272]	2-7/8 "	R429218X	R429218X[39]	R406532	R4090070[40]	R4111993[302]	R4122386	R458632	R458632
23-122527-002[272]	2-7/8 "	R429218X	R429218X[39]	R406532	R4090070[40]	N/A[53]	-	R458632	R458632
23-123552-004[266]	2-7/8 "	R429218X	R429218X[39]	R406532	R4090070[40]	N/A[53]	-	R4577503	R4577503
23-122920-002[273]	2-7/8 "	R429218X	R429218X[39]	R406532	R4090070[40]	N/A[53]	-	R458632	R458632
R44141858[275]	2-7/8 "	R429218X	R429218X[39]	R406532	R4090070[40]	R4111993[302]	R4122386	R458632	R458632
R44141858[275]	2-7/8 "	R429218X	R429218X[39]	R406532	R4090070[40]	R4111993[302]	R4122386	R4577503	R4577503
23-123552-004[266]	2-7/8 "	R429218X	R429218X[39]	R406532	R4090070[40]	R4111993[302]	R4122386	R4577503	R4577503
23-122920-002[273]	2-7/8 "	R429218X	R429218X[39]	R406532	R4090070[40]	N/A[53]	-	R458632	R458632
R44141858[275]	2-7/8 "	R429218X	R429218X[39]	R406532	R4090070[40]	R4111993[302]	R4122386	R458632	R458632
R44141858[275]	2-7/8 "	R429218X	R429218X[39]	R406532	R4090070[40]	R4111993[302]	R4122386	R4577503	R4577503
23-123572-004[271]	2-7/8 "	R429218X	R429218X[39]	R406532	R4090070[40]	R4111993[302]	R4122386	R458632	R458632
R44141858[275]	2-7/8 "	R429218X	R429218X[39]	R406532	R4090070[40]	N/A[53]	-	R4577503	R4577503
23-123572-004[271]	2-7/8 "	R429218X	R429218X[39]	R406532	R4090070[40]	N/A[53]	-	R4577503	R4577503
23-123572-004[271]	2-7/8 "	R429218X	R429218X[39]	R406532	R4090070[40]	R4111993[302]	R4122386	R458632	R458632
23-122527-002[272]	2-7/8 "	R429218X	R429218X[39]	R406532	R4090070[40]	N/A[53]	-	R4577503	R4577503
R44141858[275]	2-7/8 "	R429218X	R429218X[39]	R406532	R4090070[40]	N/A[53]	-	R458632	R458632
R44141476[268]	2-7/8 "	R429218X	R429218X[39]	R406532	R4090070[40]	N/A[53]	-	R4577503	R4577503
23-122920-002[273]	2-7/8 "	R429218X	R429218X[39]	R406532	R4090070[40]	N/A[53]	-	R458632	R458632
23-123552-004[266]	2-7/8 "	R429218X	R429218X[39]	R406532	R4090070[40]	N/A[53]	-	R458632	R458632
R44141476[268]	2-7/8 "	R429218X	R429218X[39]	R406532	R4090070[40]	N/A[53]	-	R458632	R458632
23-122527-002[272]	2-7/8 "	R429218X	R429218X[39]	R406532	R4090070[40]	R4111993[302]	R4122386	R4577503	R4577503
23-123552-004[266]	2-7/8 "	R429218X	R429218X[39]	R406532	R4090070[40]	R4111993[302]	R4122386	R4577503	R4577503
23-122527-002[272]	2-7/8 "	R429218X	R429218X[39]	R406532	R4090070[40]	N/A[53]	-	R458632	R458632
R44141476[268]	2-7/8 "	R429218X	R429218X[39]	R406532	R4090070[40]	R4111993[302]	R4122386	R458632	R458632
23-123552-004[266]	2-7/8 "	R429218X	R429218X[39]	R406532	R4090070[40]	N/A[53]	-	R4577503	R4577503
23-122527-002[272]	2-7/8 "	R429218X	R429218X[39]	R406532	R4090070[40]	R4111993[302]	R4122386	R4577503	R4577503
23-123552-004[266]	2-7/8 "	R429218X	R429218X[39]	R406532	R4090070[40]	R4111993[302]	R4122386	R4577503	R4577503
23-123572-004[271]	2-7/8 "	R429218X	R429218X[39]	R406532	R4090070[40]	N/A[53]	-	R458632	R458632
R44141476[268]	2-7/8 "	R429218X	R429218X[39]	R406532	R4090070[40]	R4111993[302]	R4122386	R458632	R458632

273 - 5 Stud, U Shape, .780 Dia. Studs

275 - 5 Stud, U Shape, .656 Dia. Studs

302 - Power Brakes, Dual System

MAKE MODEL YEAR AXLE CODE AXLE WEIGHT	AXLE & BRK. TYPE	BRK. MFG.	BRAKE SIZE	FMSI	MERITOR DISC PAD OR BRAKE SHOE	MERITOR GUIDE PIN OR RETURN SPRING KIT	MERITOR CALIPER HWD. KIT OR RETURN SPRING KIT	MERITOR ADJUSTER KIT (LEFT WHEEL)	MERITOR ADJUSTER KIT (RIGHT WHEEL)
ITE(Cont.)									
170, 1700, 1710, 1723, 1724, 1750, 1753, 1754 SERIES CONVENTIONAL CAB, SCHOOL BUS, TILT CAB(Cont.)									
1984									
	Fd	BX		7142 - D225	MD225	R40H5010	R40H5522	NR	NR
	Fd	BX		7142 - D225	MD225	R40H5010	R40H5522	NR	NR
	Fd	BX		7142 - D225	MD225	R40H5010	R40H5522	NR	NR
	Fd	BX		7142 - D225	MD225	R40H5010	R40H5522	NR	NR
	Fd	BX		7142 - D225	MD225	R40H5010	R40H5522	NR	NR
	Fd	BX		7142 - D225	MD225	R40H5010	R40H5522	NR	NR
	Fd	BX		7142 - D225	MD225	R40H5010	R40H5522	NR	NR
	Fd	BX		7142 - D225	MD225	R40H5010	R40H5522	NR	NR
	Fd	BX		7142 - D225	MD225	R40H5010	R40H5522	NR	NR
	Fd	BX		7142 - D225	MD225	R40H5010	R40H5522	NR	NR
	Fd	BX		7142 - D225	MD225	R40H5010	R40H5522	NR	NR
	Fd	BX		7142 - D225	MD225	R40H5010	R40H5522	NR	NR
	Fd	BX		7142 - D225	MD225	R40H5010	R40H5522	NR	NR
	Fd	BX		7142 - D225	MD225	R40H5010	R40H5522	NR	NR
	Fd	BX		7142 - D225	MD225	R40H5010	R40H5522	NR	NR
	Fd	BX		7142 - D225	MD225	R40H5010	R40H5522	NR	NR
	Fd	BX		7142 - D225	MD225	R40H5010	R40H5522	NR	NR
	Fd	BX		7142 - D225	MD225	R40H5010	R40H5522	NR	NR
	Fd	BX		7142 - D225	MD225	R40H5010	R40H5522	NR	NR
	Fd	BX		7142 - D225	MD225	R40H5010	R40H5522	NR	NR
	Fd	BX		7142 - D225	MD225	R40H5010	R40H5522	NR	NR
	Fd	BX		7142 - D225	MD225	R40H5010	R40H5522	NR	NR
	Fd	BX		7142 - D225	MD225	R40H5010	R40H5522	NR	NR
	Fd	BX		7142 - D225	MD225	R40H5010	R40H5522	NR	NR
	Fd	BX		7142 - D225	MD225	R40H5010	R40H5522	NR	NR
	Fd	BX		7142 - D225	MD225	R40H5010	R40H5522	NR	NR
	Fd	BX		7142 - D225	MD225	R40H5010	R40H5522	NR	NR
	Fd	BX		7142 - D225	MD225	R40H5010	R40H5522	NR	NR
	Fd	BX		7142 - D225	MD225	R40H5010	R40H5522	NR	NR
	Fd	BX		7142 - D225	MD225	R40H5010	R40H5522	NR	NR
	Fd	BX		7142 - D225	MD225	R40H5010	R40H5522	NR	NR
	Fd	BX		7142 - D225	MD225	R40H5010	R40H5522	NR	NR
	Fd	BX		7142 - D225	MD225	R40H5010	R40H5522	NR	NR
	Fd	BX		7142 - D225	MD225	R40H5010	R40H5522	NR	NR
	Fd	BX		7142 - D225	MD225	R40H5010	R40H5522	NR	NR
	Fd	BX		7142 - D225	MD225	R40H5010	R40H5522	NR	NR
	Fd	BX		7142 - D225	MD225	R40H5010	R40H5522	NR	NR
	Fd	BX		7142 - D225	MD225	R40H5010	R40H5522	NR	NR
	Fd	BX		7142 - D225	MD225	R40H5010	R40H5522	NR	NR
	Fd	BX		7142 - D225	MD225	R40H5010	R40H5522	NR	NR
	Fd	BX		7142 - D225	MD225	R40H5010	R40H5522	NR	NR
	Fd	BX		7142 - D225	MD225	R40H5010	R40H5522	NR	NR
	Fd	BX		7142 - D225	MD225	R40H5010	R40H5522	NR	NR
	Fd	BX		7142 - D225	MD225	R40H5010	R40H5522	NR	NR
	Fd	BX		7142 - D225	MD225	R40H5010	R40H5522	NR	NR
	Fd	BX		7142 - D225	MD225	R40H5010	R40H5522	NR	NR
	Fd	BX		7142 - D225	MD225	R40H5010	R40H5522	NR	NR
	Fd	BX		7142 - D225	MD225	R40H5010	R40H5522	NR	NR
	Fd	BX		7142 - D225	MD225	R40H5010	R40H5522	NR	NR
	Fd	BX		7142 - D225	MD225	R40H5010	R40H5522	NR	NR
	Fd	BX		7142 - D225	MD225	R40H5010	R40H5522	NR	NR
	Fd	BX		7142 - D225	MD225	R40H5010	R40H5522	NR	NR
	Fd	BX		7142 - D225	MD225	R40H5010	R40H5522	NR	NR
	Fd	BX		7142 - D225	MD225	R40H5010	R40H5522	NR	NR
	Fd	BX		7142 - D225	MD225	R40H5010	R40H5522	NR	NR
	Fd	BX		7142 - D225	MD225	R40H5010	R40H5522	NR	NR
	Fd	BX		7142 - D225	MD225	R40H5010	R40H5522	NR	NR
	Fd	BX		7142 - D225	MD225	R40H5010	R40H5522	NR	NR
	Fd	BX		7142 - D225	MD225	R40H5010	R40H5522	NR	NR
	Fd	BX		7142 - D225	MD225	R40H5010	R40H5522	NR	NR
	Fd	BX		7142 - D225	MD225	R40H5010	R40H5522	NR	NR
	Fd	BX		7142 - D225	MD225	R40H5010	R40H5522	NR	NR
	Fd	BX		7142 - D225	MD225	R40H5010	R40H5522	NR	NR
	Fd	BX		7142 - D225	MD225	R40H5010	R40H5522	NR	NR
	Fd	BX		7142 - D225	MD225	R40H5010	R40H5522	NR	NR
	Fd	BX		7142 - D225	MD225	R40H5010	R40H5522	NR	NR

39 - First design, uses steel pistons.
40 - For chrome plated steel version, use R4090070P
53 - Power Brakes
266 - 10 Stud, Hat Shaped
268 - 5 Stud, Hat Shape
271 - 6 Stud, Hat Shape
272 - 6 Stud, U Shape
273 - 5 Stud, U Shape, .780 Dia. Studs
275 - 5 Stud, U Shape, .656 Dia. Studs

MERITOR DRUM OR ROTOR NO.	CALIPER OR CYLINDER BORE SIZE	MERITOR CALIPER OR WHEEL CYLINDER (LEFT)	MERITOR CALIPER OR WHEEL CYLINDER (RIGHT)	MERITOR CALIPER OR WHEEL CYLINDER REPAIR KIT	MERITOR CALIPER PISTON	MERITOR MASTER CYLINDER	MERITOR MASTER CYLINDER KIT	MERITOR BRAKE HOSE (LEFT)	MERITOR BRAKE HOSE (RIGHT)
									ITE(Cont.)
170, 1700, 1710, 1723, 1724, 1750, 1753, 1754 SERIES CONVENTIONAL CAB, SCHOOL BUS, TILT CAB(Cont.)									
23-122527-002[272]	2-7/8 "	R429218X	R429218X[39]	R406532	R4090070[40]	N/A[53]	-	R458632	R458632
23-123572-004[271]	2-7/8 "	R429218X	R429218X[39]	R406532	R4090070[40]	N/A[53]	-	R4577503	R4577503
23-123552-004[266]	2-7/8 "	R429218X	R429218X[39]	R406532	R4090070[40]	N/A[53]	-	R458632	R458632
R44141476[268]	2-7/8 "	R429218X	R429218X[39]	R406532	R4090070[40]	N/A[53]	-	R4577503	R4577503
R44141476[268]	2-7/8 "	R429218X	R429218X[39]	R406532	R4090070[40]	R4111993[302]	R4122386	R4577503	R4577503
23-122527-002[272]	2-7/8 "	R429218X	R429218X[39]	R406532	R4090070[40]	R4111993[302]	R4122386	R458632	R458632
R44141858[275]	2-7/8 "	R429218X	R429218X[39]	R406532	R4090070[40]	R4111993[302]	R4122386	R458632	R458632
23-123572-004[271]	2-7/8 "	R429218X	R429218X[39]	R406532	R4090070[40]	N/A[53]	-	R458632	R458632
R44141858[275]	2-7/8 "	R429218X	R429218X[39]	R406532	R4090070[40]	N/A[53]	-	R4577503	R4577503
23-123572-004[271]	2-7/8 "	R429218X	R429218X[39]	R406532	R4090070[40]	R4111993[302]	R4122386	R458632	R458632
23-122920-002[273]	2-7/8 "	R429218X	R429218X[39]	R406532	R4090070[40]	R4111993[302]	R4122386	R4577503	R4577503
23-122920-002[273]	2-7/8 "	R429218X	R429218X[39]	R406532	R4090070[40]	N/A[53]	-	R4577503	R4577503
R44141858[275]	2-7/8 "	R429218X	R429218X[39]	R406532	R4090070[40]	N/A[53]	-	R458632	R458632
R44141858[275]	2-7/8 "	R429218X	R429218X[39]	R406532	R4090070[40]	R4111993[302]	R4122386	R4577503	R4577503
23-122527-002[272]	2-7/8 "	R429218X	R429218X[39]	R406532	R4090070[40]	R4111993[302]	R4122386	R4577503	R4577503
23-123572-004[271]	2-7/8 "	R429218X	R429218X[39]	R406532	R4090070[40]	R4111993[302]	R4122386	R4577503	R4577503
R44141476[268]	2-7/8 "	R429218X	R429218X[39]	R406532	R4090070[40]	N/A[53]	-	R4577503	R4577503
23-123572-004[271]	2-7/8 "	R429218X	R429218X[39]	R406532	R4090070[40]	R4111993[302]	R4122386	R4577503	R4577503
R44141476[268]	2-7/8 "	R429218X	R429218X[39]	R406532	R4090070[40]	R4111993[302]	R4122386	R458632	R458632
23-122920-002[273]	2-7/8 "	R429218X	R429218X[39]	R406532	R4090070[40]	N/A[53]	-	R458632	R458632
R44141476[268]	2-7/8 "	R429218X	R429218X[39]	R406532	R4090070[40]	N/A[53]	-	R458632	R458632
R44141858[275]	2-7/8 "	R429218X	R429218X[39]	R406532	R4090070[40]	R4111993[302]	R4122386	R458632	R458632
23-123552-004[266]	2-7/8 "	R429218X	R429218X[39]	R406532	R4090070[40]	N/A[53]	-	R458632	R458632
R44141858[275]	2-7/8 "	R429218X	R429218X[39]	R406532	R4090070[40]	R4111993[302]	R4122386	R4577503	R4577503
R44141476[268]	2-7/8 "	R429218X	R429218X[39]	R406532	R4090070[40]	N/A[53]	-	R4577503	R4577503
R44141476[268]	2-7/8 "	R429218X	R429218X[39]	R406532	R4090070[40]	N/A[53]	-	R458632	R458632
23-122920-002[273]	2-7/8 "	R429218X	R429218X[39]	R406532	R4090070[40]	R4111993[302]	R4122386	R458632	R458632
23-122527-002[272]	2-7/8 "	R429218X	R429218X[39]	R406532	R4090070[40]	R4111993[302]	R4122386	R4577503	R4577503
23-123552-004[266]	2-7/8 "	R429218X	R429218X[39]	R406532	R4090070[40]	R4111993[302]	R4122386	R4577503	R4577503
23-123552-004[266]	2-7/8 "	R429218X	R429218X[39]	R406532	R4090070[40]	R4111993[302]	R4122386	R458632	R458632
23-122920-002[273]	2-7/8 "	R429218X	R429218X[39]	R406532	R4090070[40]	N/A[53]	-	R4577503	R4577503
23-123572-004[271]	2-7/8 "	R429218X	R429218X[39]	R406532	R4090070[40]	R4111993[302]	R4122386	R4577503	R4577503
23-122920-002[273]	2-7/8 "	R429218X	R429218X[39]	R406532	R4090070[40]	N/A[53]	-	R4577503	R4577503
23-122527-002[272]	2-7/8 "	R429218X	R429218X[39]	R406532	R4090070[40]	R4111993[302]	R4122386	R4577503	R4577503
23-123552-004[266]	2-7/8 "	R429218X	R429218X[39]	R406532	R4090070[40]	R4111993[302]	R4122386	R458632	R458632
23-123572-004[271]	2-7/8 "	R429218X	R429218X[39]	R406532	R4090070[40]	R4111993[302]	R4122386	R4577503	R4577503
R44141476[268]	2-7/8 "	R429218X	R429218X[39]	R406532	R4090070[40]	N/A[53]	-	R458632	R458632
R44141858[275]	2-7/8 "	R429218X	R429218X[39]	R406532	R4090070[40]	N/A[53]	-	R4577503	R4577503
23-122920-002[273]	2-7/8 "	R429218X	R429218X[39]	R406532	R4090070[40]	N/A[53]	-	R458632	R458632
R44141858[275]	2-7/8 "	R429218X	R429218X[39]	R406532	R4090070[40]	R4111993[302]	R4122386	R4577503	R4577503
23-122920-002[273]	2-7/8 "	R429218X	R429218X[39]	R406532	R4090070[40]	R4111993[302]	R4122386	R4577503	R4577503
23-123572-004[271]	2-7/8 "	R429218X	R429218X[39]	R406532	R4090070[40]	R4111993[302]	R4122386	R458632	R458632
R44141476[268]	2-7/8 "	R429218X	R429218X[39]	R406532	R4090070[40]	R4111993[302]	R4122386	R458632	R458632
R44141476[268]	2-7/8 "	R429218X	R429218X[39]	R406532	R4090070[40]	R4111993[302]	R4122386	R4577503	R4577503
23-123572-004[271]	2-7/8 "	R429218X	R429218X[39]	R406532	R4090070[40]	N/A[53]	-	R458632	R458632
23-123572-004[271]	2-7/8 "	R429218X	R429218X[39]	R406532	R4090070[40]	N/A[53]	-	R4577503	R4577503
23-123572-004[271]	2-7/8 "	R429218X	R429218X[39]	R406532	R4090070[40]	R4111993[302]	R4122386	R458632	R458632
23-122527-002[272]	2-7/8 "	R429218X	R429218X[39]	R406532	R4090070[40]	N/A[53]	-	R4577503	R4577503
23-122920-002[273]	2-7/8 "	R429218X	R429218X[39]	R406532	R4090070[40]	R4111993[302]	R4122386	R4577503	R4577503
R44141858[275]	2-7/8 "	R429218X	R429218X[39]	R406532	R4090070[40]	N/A[53]	-	R4577503	R4577503
23-123552-004[266]	2-7/8 "	R429218X	R429218X[39]	R406532	R4090070[40]	N/A[53]	-	R458632	R458632
23-122527-002[272]	2-7/8 "	R429218X	R429218X[39]	R406532	R4090070[40]	N/A[53]	-	R458632	R458632
23-122527-002[272]	2-7/8 "	R429218X	R429218X[39]	R406532	R4090070[40]	N/A[53]	-	R4577503	R4577503
23-122920-002[273]	2-7/8 "	R429218X	R429218X[39]	R406532	R4090070[40]	R4111993[302]	R4122386	R458632	R458632
R44141476[268]	2-7/8 "	R429218X	R429218X[39]	R406532	R4090070[40]	R4111993[302]	R4122386	R458632	R458632
23-123572-004[271]	2-7/8 "	R429218X	R429218X[39]	R406532	R4090070[40]	R4111993[302]	R4122386	R4577503	R4577503
23-122920-002[273]	2-7/8 "	R429218X	R429218X[39]	R406532	R4090070[40]	N/A[53]	-	R4577503	R4577503
23-123572-004[271]	2-7/8 "	R429218X	R429218X[39]	R406532	R4090070[40]	N/A[53]	-	R458632	R458632
23-123552-004[266]	2-7/8 "	R429218X	R429218X[39]	R406532	R4090070[40]	R4111993[302]	R4122386	R458632	R458632
23-123552-004[266]	2-7/8 "	R429218X	R429218X[39]	R406532	R4090070[40]	R4111993[302]	R4122386	R4577503	R4577503
R44141476[268]	2-7/8 "	R429218X	R429218X[39]	R406532	R4090070[40]	N/A[53]	-	R458632	R458632
R44141858[275]	2-7/8 "	R429218X	R429218X[39]	R406532	R4090070[40]	N/A[53]	-	R458632	R458632
23-123552-004[266]	2-7/8 "	R429218X	R429218X[39]	R406532	R4090070[40]	N/A[53]	-	R4577503	R4577503

302 - Power Brakes, Dual System

MAKE MODEL YEAR AXLE CODE AXLE WEIGHT	AXLE & BRK. TYPE	BRK. MFG.	BRAKE SIZE	FMSI	MERITOR DISC PAD OR BRAKE SHOE	MERITOR GUIDE PIN OR RETURN SPRING KIT	MERITOR CALIPER HWD. KIT OR RETURN SPRING KIT	MERITOR ADJUSTER KIT (LEFT WHEEL)	MERITOR ADJUSTER KIT (RIGHT WHEEL)
ITE(Cont.)									
170, 1700, 1710, 1723, 1724, 1750, 1753, 1754 SERIES CONVENTIONAL CAB, SCHOOL BUS, TILT CAB(Cont.)									
1984									
	Fd	BX		7142 - D225	MD225	R40H5010	R40H5522	NR	NR
	Fd	BX		7142 - D225	MD225	R40H5010	R40H5522	NR	NR
	Fd	BX		7142 - D225	MD225	R40H5010	R40H5522	NR	NR
	Fd	BX		7142 - D225	MD225	R40H5010	R40H5522	NR	NR
	Fd	BX		7142 - D225	MD225	R40H5010	R40H5522	NR	NR
	Fd	BX		7142 - D225	MD225	R40H5010	R40H5522	NR	NR
	Fd	BX		7142 - D225	MD225	R40H5010	R40H5522	NR	NR
	Fd	BX		7142 - D225	MD225	R40H5010	R40H5522	NR	NR
	Fd	BX		7142 - D225	MD225	R40H5010	R40H5522	NR	NR
	Fd	BX		7142 - D225	MD225	R40H5010	R40H5522	NR	NR
	Fd	BX		7142 - D225	MD225	R40H5010	R40H5522	NR	NR
	Fd	BX		7142 - D225	MD225	R40H5010	R40H5522	NR	NR
	Fd	BX		7142 - D225	MD225	R40H5010	R40H5522	NR	NR
	Fd	BX		7142 - D225	MD225	R40H5010	R40H5522	NR	NR
	Fd	BX		7142 - D225	MD225	R40H5010	R40H5522	NR	NR
	Fd	BX		7142 - D225	MD225	R40H5010	R40H5522	NR	NR
	Fd	BX		7142 - D225	MD225	R40H5010	R40H5522	NR	NR
	Fd	BX		7142 - D225	MD225	R40H5010	R40H5522	NR	NR
	Fd	BX		7142 - D225	MD225	R40H5010	R40H5522	NR	NR
	Fd	BX		7142 - D225	MD225	R40H5010	R40H5522	NR	NR
	Fd	BX		7142 - D225	MD225	R40H5010	R40H5522	NR	NR
S1723, S1753 School Bus FA73									
	Fd	BX		7108 - D184	MD184	R40H5010	R40H5519	NR	NR
	Fd	BX		7108 - D184	MD184	R40H5010	R40H5519	NR	NR
	Fd	BX		7108 - D184	MD184	R40H5010	R40H5519	NR	NR
	Fd	BX		7108 - D184	MD184	R40H5010	R40H5519	NR	NR
	Fd	BX		7108 - D184	MD184	R40H5010	R40H5519	NR	NR
	Fd	BX		7108 - D184	MD184	R40H5010	R40H5519	NR	NR
	Fd	BX		7108 - D184	MD184	R40H5010	R40H5519	NR	NR
	Fd	BX		7108 - D184	MD184	R40H5010	R40H5519	NR	NR
S1723, S1753 School Bus RA29, 30, 42, 44									
	Rd	BX		7142 - D225	MD225	R40H5010	R40H5522	NR	NR
	Rd	BX		7108 - D184	MD184	R40H5010	R40H5519	NR	NR
	Rd	BX		7142 - D225	MD225	R40H5010	R40H5522	NR	NR
	Rd	BX		7108 - D184	MD184	R40H5010	R40H5519	NR	NR
	Rd	BX		7108 - D184	MD184	R40H5010	R40H5519	NR	NR
	Rd	BX		7142 - D225	MD225	R40H5010	R40H5522	NR	NR
	Rd	BX		7142 - D225	MD225	R40H5010	R40H5522	NR	NR
	Rd	BX		7142 - D225	MD225	R40H5010	R40H5522	NR	NR
	Rd	BX		7142 - D225	MD225	R40H5010	R40H5522	NR	NR
	Rd	BX		7108 - D184	MD184	R40H5010	R40H5519	NR	NR
	Rd	BX		7108 - D184	MD184	R40H5010	R40H5519	NR	NR
	Rd	BX		7142 - D225	MD225	R40H5010	R40H5522	NR	NR
	Rd	BX		7142 - D225	MD225	R40H5010	R40H5522	NR	NR
	Rd	BX		7142 - D225	MD225	R40H5010	R40H5522	NR	NR
	Rd	BX		7142 - D225	MD225	R40H5010	R40H5522	NR	NR
	Rd	BX		7108 - D184	MD184	R40H5010	R40H5519	NR	NR
	Rd	BX		7142 - D225	MD225	R40H5010	R40H5522	NR	NR
	Rd	BX		7142 - D225	MD225	R40H5010	R40H5522	NR	NR
	Rd	BX		7142 - D225	MD225	R40H5010	R40H5522	NR	NR
	Rd	BX		7142 - D225	MD225	R40H5010	R40H5522	NR	NR
	Rd	BX		7108 - D184	MD184	R40H5010	R40H5519	NR	NR
	Rd	BX		7142 - D225	MD225	R40H5010	R40H5522	NR	NR
	Rd	BX		7142 - D225	MD225	R40H5010	R40H5522	NR	NR
	Rd	BX		7142 - D225	MD225	R40H5010	R40H5522	NR	NR
	Rd	BX		7108 - D184	MD184	R40H5010	R40H5519	NR	NR
	Rd	BX		7142 - D225	MD225	R40H5010	R40H5522	NR	NR
	Rd	BX		7142 - D225	MD225	R40H5010	R40H5522	NR	NR
	Rd	BX		7108 - D184	MD184	R40H5010	R40H5519	NR	NR
	Rd	BX		7108 - D184	MD184	R40H5010	R40H5519	NR	NR
	Rd	BX		7142 - D225	MD225	R40H5010	R40H5522	NR	NR
	Rd	BX		7142 - D225	MD225	R40H5010	R40H5522	NR	NR
	Rd	BX		7142 - D225	MD225	R40H5010	R40H5522	NR	NR
	Rd	BX		7108 - D184	MD184	R40H5010	R40H5519	NR	NR

37 - Also available as a New unit

38 - First design, may have external joining tube and uses steel pistons

39 - First design, uses steel pistons.

40 - For chrome plated steel version, use R4090070P

52 - 18" Length

53 - Power Brakes

201 - Steel Piston

266 - 10 Stud, Hat Shaped

267 - 10 Stud, U Shaped

MERITOR DRUM OR ROTOR NO.	CALIPER OR CYLINDER BORE SIZE	MERITOR CALIPER OR WHEEL CYLINDER (LEFT)	MERITOR CALIPER OR WHEEL CYLINDER (RIGHT)	MERITOR CALIPER OR WHEEL CYLINDER REPAIR KIT	MERITOR CALIPER PISTON	MERITOR MASTER CYLINDER	MERITOR MASTER CYLINDER KIT	MERITOR BRAKE HOSE (LEFT)	MERITOR BRAKE HOSE (RIGHT)
									ITE(Cont.)
170, 1700, 1710, 1723, 1724, 1750, 1753, 1754 SERIES CONVENTIONAL CAB, SCHOOL BUS, TILT CAB(Cont.)									
23-122527-002[272]	2-7/8 "	R429218X	R429218X[39]	R406532	R4090070[40]	R4111993[302]	R4122386	R4577503	R4577503
23-123552-004[266]	2-7/8 "	R429218X	R429218X[39]	R406532	R4090070[40]	R4111993[302]	R4122386	R458632	R458632
23-122920-002[273]	2-7/8 "	R429218X	R429218X[39]	R406532	R4090070[40]	R4111993[302]	R4122386	R458632	R458632
23-122527-002[272]	2-7/8 "	R429218X	R429218X[39]	R406532	R4090070[40]	N/A[53]	-	R4577503	R4577503
23-122920-002[273]	2-7/8 "	R429218X	R429218X[39]	R406532	R4090070[40]	R4111993[302]	R4122386	R4577503	R4577503
23-123572-004[271]	2-7/8 "	R429218X	R429218X[39]	R406532	R4090070[40]	N/A[53]	-	R4577503	R4577503
23-123572-004[271]	2-7/8 "	R429218X	R429218X[39]	R406532	R4090070[40]	N/A[53]	-	R458632	R458632
R44141858[275]	2-7/8 "	R429218X	R429218X[39]	R406532	R4090070[40]	N/A[53]	-	R458632	R458632
23-122527-002[272]	2-7/8 "	R429218X	R429218X[39]	R406532	R4090070[40]	N/A[53]	-	R458632	R458632
23-123552-004[266]	2-7/8 "	R429218X	R429218X[39]	R406532	R4090070[40]	N/A[53]	-	R4577503	R4577503
23-123552-004[266]	2-7/8 "	R429218X	R429218X[39]	R406532	R4090070[40]	R4111993[302]	R4122386	R458632	R458632
R44141858[275]	2-7/8 "	R429218X	R429218X[39]	R406532	R4090070[40]	N/A[53]	-	R4577503	R4577503
23-122920-002[273]	2-7/8 "	R429218X	R429218X[39]	R406532	R4090070[40]	R4111993[302]	R4122386	R4577503	R4577503
23-122920-002[273]	2-7/8 "	R429218X	R429218X[39]	R406532	R4090070[40]	N/A[53]	-	R458632	R458632
23-123552-004[266]	2-7/8 "	R429218X	R429218X[39]	R406532	R4090070[40]	R4111993[302]	R4122386	R4577503	R4577503
R44141858[275]	2-7/8 "	R429218X	R429218X[39]	R406532	R4090070[40]	N/A[53]	-	R4577503	R4577503
23-123552-004[266]	2-7/8 "	R429218X	R429218X[39]	R406532	R4090070[40]	N/A[53]	-	R4577503	R4577503
23-122527-002[272]	2-7/8 "	R429218X	R429218X[39]	R406532	R4090070[40]	N/A[53]	-	R458632	R458632
23-122527-002[272]	2-7/8 "	R429218X	R429218X[39]	R406532	R4090070[40]	R4111993[302]	R4122386	R458632	R458632
R44141476[268]	2-7/8 "	R429218X	R429218X[39]	R406532	R4090070[40]	R4111993[302]	R4122386	R4577503	R4577503
R44141858[275]	2-7/8 "	R429218X	R429218X[39]	R406532	R4090070[40]	R4111993[302]	R4122386	R458632	R458632
23-122527-002[272]	3-3/8 "	R42R55099	R42R55098[37]	R4066780	R4090021[201]	R4111993[302]	R4122386	R458632	R458632
23-122527-002[272]	3-3/8 "	R42R55099	R42R55098[37]	R4066780	R4090021[201]	R4111993[302]	R4122386	R458632	R458632
23-122527-002[272]	3-3/8 "	R42R55099	R42R55098[37]	R4066780	R4090021[201]	R4111993[302]	R4122386	R4577503	R4577503
23-122527-002[272]	3-3/8 "	R42R55099	R42R55098[37]	R4066780	R4090021[201]	N/A[53]	-	R4577503	R4577503
23-122527-002[272]	3-3/8 "	R42R55099	R42R55098[37]	R4066780	R4090021[201]	R4111993[302]	R4122386	R4577503	R4577503
23-122527-002[272]	3-3/8 "	R42R55099	R42R55098[37]	R4066780	R4090021[201]	N/A[53]	-	R4577503	R4577503
23-122527-002[272]	3-3/8 "	R42R55099	R42R55098[37]	R4066780	R4090021[201]	N/A[53]	-	R458632	R458632
23-122527-002[272]	3-3/8 "	R42R55099	R42R55098[37]	R4066780	R4090021[201]	N/A[53]	-	R458632	R458632
23-123572-004[271]	2-7/8 "	R429218X	R429218X[39]	R406532	R4090070[40]	-	-	R458634[52]	R458634
R44141628[269]	2-19/32 "	R42R55245	R42R55245[38]	R402235118	R402238231[201]	-	-	R458634[52]	R458634
23-123572-004[271]	2-7/8 "	R429218X	R429218X[39]	R406532	R4090070[40]	-	-	R458634[52]	R458634
R44141627[270]	2-19/32 "	R42R55245	R42R55245[38]	R402235118	R402238231[201]	-	-	R458634[52]	R458634
R44141629[269]	2-19/32 "	R42R55245	R42R55245[38]	R402235118	R402238231[201]	-	-	R458634[52]	R458634
23-122527-002[272]	2-7/8 "	R429218X	R429218X[39]	R406532	R4090070[40]	-	-	R458634[52]	R458634
R44141608[267]	2-7/8 "	R429218X	R429218X[39]	R406532	R4090070[40]	-	-	R458634[52]	R458634
23-123552-004[266]	2-7/8 "	R429218X	R429218X[39]	R406532	R4090070[40]	-	-	R458634[52]	R458634
23-123572-004[271]	2-7/8 "	R429218X	R429218X[39]	R406532	R4090070[40]	-	-	R458634[52]	R458634
R44141628[269]	2-19/32 "	R42R55245	R42R55245[38]	R402235118	R402238231[201]	-	-	R458634[52]	R458634
23-123572-004[271]	2-19/32 "	R42R55245	R42R55245[38]	R402235118	R402238231[201]	-	-	R458634[52]	R458634
R44141628[269]	2-7/8 "	R429218X	R429218X[39]	R406532	R4090070[40]	-	-	R458634[52]	R458634
R44141629[269]	2-7/8 "	R429218X	R429218X[39]	R406532	R4090070[40]	-	-	R458634[52]	R458634
R44141608[267]	2-7/8 "	R429218X	R429218X[39]	R406532	R4090070[40]	-	-	R458634[52]	R458634
R44141629[269]	2-7/8 "	R429218X	R429218X[39]	R406532	R4090070[40]	-	-	R458634[52]	R458634
23-123572-004[271]	2-19/32 "	R42R55245	R42R55245[38]	R402235118	R402238231[201]	-	-	R458634[52]	R458634
R44141629[269]	2-7/8 "	R429218X	R429218X[39]	R406532	R4090070[40]	-	-	R458634[52]	R458634
R44141627[270]	2-7/8 "	R429218X	R429218X[39]	R406532	R4090070[40]	-	-	R458634[52]	R458634
R44141628[269]	2-7/8 "	R429218X	R429218X[39]	R406532	R4090070[40]	-	-	R458634[52]	R458634
23-123572-004[271]	2-19/32 "	R42R55245	R42R55245[38]	R402235118	R402238231[201]	-	-	R458634[52]	R458634
R44141627[270]	2-7/8 "	R429218X	R429218X[39]	R406532	R4090070[40]	-	-	R458634[52]	R458634
R44141628[269]	2-7/8 "	R429218X	R429218X[39]	R406532	R4090070[40]	-	-	R458634[52]	R458634
R44141627[270]	2-7/8 "	R429218X	R429218X[39]	R406532	R4090070[40]	-	-	R458634[52]	R458634
23-123572-004[271]	2-19/32 "	R42R55245	R42R55245[38]	R402235118	R402238231[201]	-	-	R458634[52]	R458634
R44141608[267]	2-7/8 "	R429218X	R429218X[39]	R406532	R4090070[40]	-	-	R458634[52]	R458634
23-122527-002[272]	2-7/8 "	R429218X	R429218X[39]	R406532	R4090070[40]	-	-	R458634[52]	R458634
R44141629[269]	2-19/32 "	R42R55245	R42R55245[38]	R402235118	R402238231[201]	-	-	R458634[52]	R458634
23-123552-004[266]	2-19/32 "	R42R55245	R42R55245[38]	R402235118	R402238231[201]	-	-	R458634[52]	R458634
R44141629[269]	2-7/8 "	R429218X	R429218X[39]	R406532	R4090070[40]	-	-	R458634[52]	R458634
R44141608[267]	2-7/8 "	R429218X	R429218X[39]	R406532	R4090070[40]	-	-	R458634[52]	R458634
R44141628[269]	2-7/8 "	R429218X	R429218X[39]	R406532	R4090070[40]	-	-	R458634[52]	R458634
R44141629[269]	2-19/32 "	R42R55245	R42R55245[38]	R402235118	R402238231[201]	-	-	R458634[52]	R458634

268 - 5 Stud, Hat Shape

269 - 5 Stud, U Shape

270 - 5 Stud, U Shape, .766 Dia. Studs

271 - 6 Stud, Hat Shape

272 - 6 Stud, U Shape

273 - 5 Stud, U Shape, .780 Dia. Studs

275 - 5 Stud, U Shape, .656 Dia. Studs

302 - Power Brakes, Dual System

MAKE MODEL YEAR AXLE CODE AXLE WEIGHT	AXLE & BRK. TYPE	BRK. MFG.	BRAKE SIZE	FMSI	MERITOR DISC PAD OR BRAKE SHOE	MERITOR GUIDE PIN OR RETURN SPRING KIT	MERITOR CALIPER HWD. KIT OR RETURN SPRING KIT	MERITOR ADJUSTER KIT (LEFT WHEEL)	MERITOR ADJUSTER KIT (RIGHT WHEEL)
ITE(Cont.)									
170, 1700, 1710, 1723, 1724, 1750, 1753, 1754 SERIES CONVENTIONAL CAB, SCHOOL BUS, TILT CAB(Cont.)									
1984									
S1723, S1753 School Bus									
RA29, 30, 42, 44	Rd	BX		7108 - D184	MD184	R40H5010	R40H5519	NR	NR
	Rd	BX		7142 - D225	MD225	R40H5010	R40H5522	NR	NR
	Rd	BX		7142 - D225	MD225	R40H5010	R40H5522	NR	NR
	Rd	BX		7142 - D225	MD225	R40H5010	R40H5522	NR	NR
	Rd	BX		7142 - D225	MD225	R40H5010	R40H5522	NR	NR
	Rd	BX		7142 - D225	MD225	R40H5010	R40H5522	NR	NR
	Rd	BX		7142 - D225	MD225	R40H5010	R40H5522	NR	NR
	Rd	BX		7108 - D184	MD184	R40H5010	R40H5519	NR	NR
	Rd	BX		7108 - D184	MD184	R40H5010	R40H5519	NR	NR
	Rd	BX		7108 - D184	MD184	R40H5010	R40H5519	NR	NR
	Rd	BX		7142 - D225	MD225	R40H5010	R40H5522	NR	NR
	Rd	BX		7142 - D225	MD225	R40H5010	R40H5522	NR	NR
	Rd	BX		7142 - D225	MD225	R40H5010	R40H5522	NR	NR
	Rd	BX		7142 - D225	MD225	R40H5010	R40H5522	NR	NR
	Rd	BX		7142 - D225	MD225	R40H5010	R40H5522	NR	NR
	Rd	BX		7142 - D225	MD225	R40H5010	R40H5522	NR	NR
	Rd	BX		7108 - D184	MD184	R40H5010	R40H5519	NR	NR
	Rd	BX		7108 - D184	MD184	R40H5010	R40H5519	NR	NR
	Rd	BX		7142 - D225	MD225	R40H5010	R40H5522	NR	NR
	Rd	BX		7108 - D184	MD184	R40H5010	R40H5519	NR	NR
	Rd	BX		7142 - D225	MD225	R40H5010	R40H5522	NR	NR
	Rd	BX		7142 - D225	MD225	R40H5010	R40H5522	NR	NR
	Rd	BX		7108 - D184	MD184	R40H5010	R40H5519	NR	NR
	Rd	BX		7108 - D184	MD184	R40H5010	R40H5519	NR	NR
	Rd	BX		7108 - D184	MD184	R40H5010	R40H5519	NR	NR
	Rd	BX		7142 - D225	MD225	R40H5010	R40H5522	NR	NR
	Rd	BX		7108 - D184	MD184	R40H5010	R40H5519	NR	NR
	Rd	BX		7142 - D225	MD225	R40H5010	R40H5522	NR	NR
	Rd	BX		7108 - D184	MD184	R40H5010	R40H5519	NR	NR
	Rd	BX		7142 - D225	MD225	R40H5010	R40H5522	NR	NR
	Rd	BX		7142 - D225	MD225	R40H5010	R40H5522	NR	NR
	Rd	BX		7108 - D184	MD184	R40H5010	R40H5519	NR	NR
	Rd	BX		7142 - D225	MD225	R40H5010	R40H5522	NR	NR
	Rd	BX		7142 - D225	MD225	R40H5010	R40H5522	NR	NR
S1724, S1754 Conventional	Fd	BX		7108 - D184	MD184	R40H5010	R40H5519	NR	NR
	Fd	BX		7108 - D184	MD184	R40H5010	R40H5519	NR	NR
	Fd	BX		7108 - D184	MD184	R40H5010	R40H5519	NR	NR
	Fd	BX		7108 - D184	MD184	R40H5010	R40H5519	NR	NR
	Fd	BX		7108 - D184	MD184	R40H5010	R40H5519	NR	NR
	Fd	BX		7108 - D184	MD184	R40H5010	R40H5519	NR	NR
	Fd	BX		7108 - D184	MD184	R40H5010	R40H5519	NR	NR
	Fd	BX		7108 - D184	MD184	R40H5010	R40H5519	NR	NR
	Fd	BX		7108 - D184	MD184	R40H5010	R40H5519	NR	NR
	Fd	BX		7108 - D184	MD184	R40H5010	R40H5519	NR	NR
	Fd	BX		7108 - D184	MD184	R40H5010	R40H5519	NR	NR
	Fd	BX		7108 - D184	MD184	R40H5010	R40H5519	NR	NR
	Fd	BX		7108 - D184	MD184	R40H5010	R40H5519	NR	NR
	Fd	BX		7108 - D184	MD184	R40H5010	R40H5519	NR	NR
	Fd	BX		7108 - D184	MD184	R40H5010	R40H5519	NR	NR
	Fd	BX		7108 - D184	MD184	R40H5010	R40H5519	NR	NR
	Fd	BX		7108 - D184	MD184	R40H5010	R40H5519	NR	NR
	Fd	BX		7108 - D184	MD184	R40H5010	R40H5519	NR	NR
	Fd	BX		7108 - D184	MD184	R40H5010	R40H5519	NR	NR
	Fd	BX		7108 - D184	MD184	R40H5010	R40H5519	NR	NR
	Fd	BX		7108 - D184	MD184	R40H5010	R40H5519	NR	NR
	Fd	BX		7108 - D184	MD184	R40H5010	R40H5519	NR	NR
	Fd	BX		7108 - D184	MD184	R40H5010	R40H5519	NR	NR
	Fd	BX		7108 - D184	MD184	R40H5010	R40H5519	NR	NR
S1724, S1754 Conventional									
FA101	Fd	BX		7108 - D184	MD184	R40H5010	R40H5519	NR	NR
	Fd	BX		7108 - D184	MD184	R40H5010	R40H5519	NR	NR
	Fd	BX		7108 - D184	MD184	R40H5010	R40H5519	NR	NR
	Fd	BX		7108 - D184	MD184	R40H5010	R40H5519	NR	NR
	Fd	BX		7108 - D184	MD184	R40H5010	R40H5519	NR	NR
	Fd	BX		7108 - D184	MD184	R40H5010	R40H5519	NR	NR
	Fd	BX		7108 - D184	MD184	R40H5010	R40H5519	NR	NR

37 - Also available as a New unit

38 - First design, may have external joining tube and uses steel pistons

39 - First design, uses steel pistons.

40 - For chrome plated steel version, use R4090070P

52 - 18" Length

201 - Steel Piston

266 - 10 Stud, Hat Shaped

267 - 10 Stud, U Shaped

268 - 5 Stud, Hat Shape

MERITOR DRUM OR ROTOR NO.	CALIPER OR CYLINDER BORE SIZE	MERITOR CALIPER OR WHEEL CYLINDER (LEFT)	MERITOR CALIPER OR WHEEL CYLINDER (RIGHT)	MERITOR CALIPER OR WHEEL CYLINDER REPAIR KIT	MERITOR CALIPER PISTON	MERITOR MASTER CYLINDER	MERITOR MASTER CYLINDER KIT	MERITOR BRAKE HOSE (LEFT)	MERITOR BRAKE HOSE (RIGHT)
									ITE(Cont.)
170, 1700, 1710, 1723, 1724, 1750, 1753, 1754 SERIES CONVENTIONAL CAB, SCHOOL BUS, TILT CAB(Cont.)									
23-123552-004[266]	2-19/32 "	R42R55245	R42R55245[38]	R402235118	R402238231[201]	-	-	R458634[52]	R458634
23-122527-002[272]	2-7/8 "	R429218X	R429218X[39]	R406532	R4090070[40]	-	-	R458634[52]	R458634
R44141627[270]	2-7/8 "	R429218X	R429218X[39]	R406532	R4090070[40]	-	-	R458634[52]	R458634
23-123572-004[271]	2-7/8 "	R429218X	R429218X[39]	R406532	R4090070[40]	-	-	R458634[52]	R458634
R44141608[267]	2-7/8 "	R429218X	R429218X[39]	R406532	R4090070[40]	-	-	R458634[52]	R458634
23-122527-002[272]	2-7/8 "	R429218X	R429218X[39]	R406532	R4090070[40]	-	-	R458634[52]	R458634
23-123552-004[266]	2-7/8 "	R429218X	R429218X[39]	R406532	R4090070[40]	-	-	R458634[52]	R458634
R44141608[267]	2-19/32 "	R42R55245	R42R55245[38]	R402235118	R402238231[201]	-	-	R458634[52]	R458634
23-122527-002[272]	2-19/32 "	R42R55245	R42R55245[38]	R402235118	R402238231[201]	-	-	R458634[52]	R458634
R44141608[267]	2-19/32 "	R42R55245	R42R55245[38]	R402235118	R402238231[201]	-	-	R458634[52]	R458634
R44141629[269]	2-7/8 "	R429218X	R429218X[39]	R406532	R4090070[40]	-	-	R458634[52]	R458634
23-123552-004[266]	2-7/8 "	R429218X	R429218X[39]	R406532	R4090070[40]	-	-	R458634[52]	R458634
23-122527-002[272]	2-7/8 "	R429218X	R429218X[39]	R406532	R4090070[40]	-	-	R458634[52]	R458634
23-123572-004[271]	2-7/8 "	R429218X	R429218X[39]	R406532	R4090070[40]	-	-	R458634[52]	R458634
R44141628[269]	2-7/8 "	R429218X	R429218X[39]	R406532	R4090070[40]	-	-	R458634[52]	R458634
R44141627[270]	2-7/8 "	R429218X	R429218X[39]	R406532	R4090070[40]	-	-	R458634[52]	R458634
R44141629[269]	2-19/32 "	R42R55245	R42R55245[38]	R402235118	R402238231[201]	-	-	R458634[52]	R458634
R44141608[267]	2-19/32 "	R42R55245	R42R55245[38]	R402235118	R402238231[201]	-	-	R458634[52]	R458634
R44141628[269]	2-7/8 "	R429218X	R429218X[39]	R406532	R4090070[40]	-	-	R458634[52]	R458634
R44141627[270]	2-19/32 "	R42R55245	R42R55245[38]	R402235118	R402238231[201]	-	-	R458634[52]	R458634
R44141608[267]	2-7/8 "	R429218X	R429218X[39]	R406532	R4090070[40]	-	-	R458634[52]	R458634
23-123572-004[271]	2-7/8 "	R429218X	R429218X[39]	R406532	R4090070[40]	-	-	R458634[52]	R458634
R44141608[267]	2-19/32 "	R42R55245	R42R55245[38]	R402235118	R402238231[201]	-	-	R458634[52]	R458634
23-123552-004[266]	2-19/32 "	R42R55245	R42R55245[38]	R402235118	R402238231[201]	-	-	R458634[52]	R458634
23-122527-002[272]	2-19/32 "	R42R55245	R42R55245[38]	R402235118	R402238231[201]	-	-	R458634[52]	R458634
R44141627[270]	2-7/8 "	R429218X	R429218X[39]	R406532	R4090070[40]	-	-	R458634[52]	R458634
23-123552-004[266]	2-19/32 "	R42R55245	R42R55245[38]	R402235118	R402238231[201]	-	-	R458634[52]	R458634
23-123552-004[266]	2-7/8 "	R429218X	R429218X[39]	R406532	R4090070[40]	-	-	R458634[52]	R458634
R44141628[269]	2-19/32 "	R42R55245	R42R55245[38]	R402235118	R402238231[201]	-	-	R458634[52]	R458634
23-123552-004[266]	2-7/8 "	R429218X	R429218X[39]	R406532	R4090070[40]	-	-	R458634[52]	R458634
23-122527-002[272]	2-7/8 "	R429218X	R429218X[39]	R406532	R4090070[40]	-	-	R458634[52]	R458634
R44141628[269]	2-19/32 "	R42R55245	R42R55245[38]	R402235118	R402238231[201]	-	-	R458634[52]	R458634
23-123552-004[266]	2-7/8 "	R429218X	R429218X[39]	R406532	R4090070[40]	-	-	R458634[52]	R458634
R44141629[269]	2-7/8 "	R429218X	R429218X[39]	R406532	R4090070[40]	-	-	R458634[52]	R458634
23-123572-004[271]	3-3/8 "	R42R55099	R42R55098[37]	R4066780	R4090021[201]	R4111993[302]	R4122386	R4577503	R4577503
R44141858[275]	3-3/8 "	R42R55099	R42R55098[37]	R4066780	R4090021[201]	R4111993[302]	R4122386	R4577503	R4577503
23-123552-004[266]	3-3/8 "	R42R55099	R42R55098[37]	R4066780	R4090021[201]	R4111993[302]	R4122386	R458632	R458632
R44141476[268]	3-3/8 "	R42R55099	R42R55098[37]	R4066780	R4090021[201]	R4111993[302]	R4122386	R458632	R458632
R44141476[268]	3-3/8 "	R42R55099	R42R55098[37]	R4066780	R4090021[201]	R4111993[302]	R4122386	R4577503	R4577503
23-122920-002[273]	3-3/8 "	R42R55099	R42R55098[37]	R4066780	R4090021[201]	R4111993[302]	R4122386	R4577503	R4577503
23-123572-004[271]	3-3/8 "	R42R55099	R42R55098[37]	R4066780	R4090021[201]	R4111993[302]	R4122386	R4577503	R4577503
R44141858[275]	3-3/8 "	R42R55099	R42R55098[37]	R4066780	R4090021[201]	R4111993[302]	R4122386	R458632	R458632
R44141858[275]	3-3/8 "	R42R55099	R42R55098[37]	R4066780	R4090021[201]	R4111993[302]	R4122386	R4577503	R4577503
23-123552-004[266]	3-3/8 "	R42R55099	R42R55098[37]	R4066780	R4090021[201]	R4111993[302]	R4122386	R458632	R458632
23-122920-002[273]	3-3/8 "	R42R55099	R42R55098[37]	R4066780	R4090021[201]	R4111993[302]	R4122386	R4577503	R4577503
R44141858[275]	3-3/8 "	R42R55099	R42R55098[37]	R4066780	R4090021[201]	R4111993[302]	R4122386	R458632	R458632
23-123552-004[266]	3-3/8 "	R42R55099	R42R55098[37]	R4066780	R4090021[201]	R4111993[302]	R4122386	R4577503	R4577503
23-123572-004[271]	3-3/8 "	R42R55099	R42R55098[37]	R4066780	R4090021[201]	R4111993[302]	R4122386	R458632	R458632
23-122920-002[273]	3-3/8 "	R42R55099	R42R55098[37]	R4066780	R4090021[201]	R4111993[302]	R4122386	R458632	R458632
23-123572-004[271]	3-3/8 "	R42R55099	R42R55098[37]	R4066780	R4090021[201]	R4111993[302]	R4122386	R458632	R458632
23-123552-004[266]	3-3/8 "	R42R55099	R42R55098[37]	R4066780	R4090021[201]	R4111993[302]	R4122386	R4577503	R4577503
R44141476[268]	3-3/8 "	R42R55099	R42R55098[37]	R4066780	R4090021[201]	R4111993[302]	R4122386	R458632	R458632
R44141476[268]	3-3/8 "	R42R55099	R42R55098[37]	R4066780	R4090021[201]	R4111993[302]	R4122386	R4577503	R4577503
23-122920-002[273]	3-3/8 "	R42R55099	R42R55098[37]	R4066780	R4090021[201]	R4111993[302]	R4122386	R458632	R458632
R44141476[268]	2-19/32 "	R42R55245	R42R55245[38]	R402235118	R402238231[201]	R4111993[302]	R4122386	R458632	R458632
23-122920-002[273]	2-19/32 "	R42R55245	R42R55245[38]	R402235118	R402238231[201]	R4111993[302]	R4122386	R4577503	R4577503
23-123572-004[271]	2-19/32 "	R42R55245	R42R55245[38]	R402235118	R402238231[201]	R4111993[302]	R4122386	R458632	R458632
23-122527-002[272]	2-19/32 "	R42R55245	R42R55245[38]	R402235118	R402238231[201]	R4111993[302]	R4122386	R4577503	R4577503
23-123552-004[266]	2-19/32 "	R42R55245	R42R55245[38]	R402235118	R402238231[201]	R4111993[302]	R4122386	R458632	R458632
R44141476[268]	2-19/32 "	R42R55245	R42R55245[38]	R402235118	R402238231[201]	R4111993[302]	R4122386	R4577503	R4577503
R44141858[275]	2-19/32 "	R42R55245	R42R55245[38]	R402235118	R402238231[201]	R4111993[302]	R4122386	R458632	R458632

269 - 5 Stud, U Shape

270 - 5 Stud, U Shape, .766 Dia. Studs

271 - 6 Stud, Hat Shape

272 - 6 Stud, U Shape

273 - 5 Stud, U Shape, .780 Dia. Studs

275 - 5 Stud, U Shape, .656 Dia. Studs

302 - Power Brakes, Dual System

MAKE MODEL YEAR AXLE CODE AXLE WEIGHT	AXLE & BRK. TYPE	BRK. MFG.	BRAKE SIZE	FMSI	MERITOR DISC PAD OR BRAKE SHOE	MERITOR GUIDE PIN OR RETURN SPRING KIT	MERITOR CALIPER HWD. KIT OR RETURN SPRING KIT	MERITOR ADJUSTER KIT (LEFT WHEEL)	MERITOR ADJUSTER KIT (RIGHT WHEEL)
ITE(Cont.)									
170, 1700, 1710, 1723, 1724, 1750, 1753, 1754 SERIES CONVENTIONAL CAB, SCHOOL BUS, TILT CAB(Cont.)									
1984									
	Fd	BX		7108 - D184	MD184	R40H5010	R40H5519	NR	NR
	Fd	BX		7108 - D184	MD184	R40H5010	R40H5519	NR	NR
	Fd	BX		7108 - D184	MD184	R40H5010	R40H5519	NR	NR
	Fd	BX		7108 - D184	MD184	R40H5010	R40H5519	NR	NR
	Fd	BX		7108 - D184	MD184	R40H5010	R40H5519	NR	NR
S1724, S1754 Conventional									
FA309, 329, 339	Fd	BX		7142 - D225	MD225	R40H5010	R40H5522	NR	NR
	Fd	BX		7142 - D225	MD225	R40H5010	R40H5522	NR	NR
	Fd	BX		7142 - D225	MD225	R40H5010	R40H5522	NR	NR
	Fd	BX		7142 - D225	MD225	R40H5010	R40H5522	NR	NR
	Fd	BX		7142 - D225	MD225	R40H5010	R40H5522	NR	NR
	Fd	BX		7142 - D225	MD225	R40H5010	R40H5522	NR	NR
	Fd	BX		7142 - D225	MD225	R40H5010	R40H5522	NR	NR
	Fd	BX		7142 - D225	MD225	R40H5010	R40H5522	NR	NR
	Fd	BX		7142 - D225	MD225	R40H5010	R40H5522	NR	NR
	Fd	BX		7142 - D225	MD225	R40H5010	R40H5522	NR	NR
	Fd	BX		7142 - D225	MD225	R40H5010	R40H5522	NR	NR
	Fd	BX		7142 - D225	MD225	R40H5010	R40H5522	NR	NR
	Fd	BX		7142 - D225	MD225	R40H5010	R40H5522	NR	NR
	Fd	BX		7142 - D225	MD225	R40H5010	R40H5522	NR	NR
	Fd	BX		7142 - D225	MD225	R40H5010	R40H5522	NR	NR
	Fd	BX		7142 - D225	MD225	R40H5010	R40H5522	NR	NR
	Fd	BX		7142 - D225	MD225	R40H5010	R40H5522	NR	NR
	Fd	BX		7142 - D225	MD225	R40H5010	R40H5522	NR	NR
	Fd	BX		7142 - D225	MD225	R40H5010	R40H5522	NR	NR
	Fd	BX		7142 - D225	MD225	R40H5010	R40H5522	NR	NR
	Fd	BX		7142 - D225	MD225	R40H5010	R40H5522	NR	NR
	Fd	BX		7142 - D225	MD225	R40H5010	R40H5522	NR	NR
	Fd	BX		7142 - D225	MD225	R40H5010	R40H5522	NR	NR
	Fd	BX		7142 - D225	MD225	R40H5010	R40H5522	NR	NR
	Fd	BX		7142 - D225	MD225	R40H5010	R40H5522	NR	NR
	Fd	BX		7142 - D225	MD225	R40H5010	R40H5522	NR	NR
	Fd	BX		7142 - D225	MD225	R40H5010	R40H5522	NR	NR
	Fd	BX		7142 - D225	MD225	R40H5010	R40H5522	NR	NR
	Fd	BX		7142 - D225	MD225	R40H5010	R40H5522	NR	NR
	Fd	BX		7142 - D225	MD225	R40H5010	R40H5522	NR	NR
	Fd	BX		7142 - D225	MD225	R40H5010	R40H5522	NR	NR
	Fd	BX		7142 - D225	MD225	R40H5010	R40H5522	NR	NR
	Fd	BX		7142 - D225	MD225	R40H5010	R40H5522	NR	NR
	Fd	BX		7142 - D225	MD225	R40H5010	R40H5522	NR	NR
	Fd	BX		7142 - D225	MD225	R40H5010	R40H5522	NR	NR
	Fd	BX		7142 - D225	MD225	R40H5010	R40H5522	NR	NR
	Fd	BX		7142 - D225	MD225	R40H5010	R40H5522	NR	NR
	Fd	BX		7142 - D225	MD225	R40H5010	R40H5522	NR	NR
	Fd	BX		7142 - D225	MD225	R40H5010	R40H5522	NR	NR
	Fd	BX		7142 - D225	MD225	R40H5010	R40H5522	NR	NR
	Fd	BX		7142 - D225	MD225	R40H5010	R40H5522	NR	NR
	Fd	BX		7142 - D225	MD225	R40H5010	R40H5522	NR	NR
	Fd	BX		7142 - D225	MD225	R40H5010	R40H5522	NR	NR
	Fd	BX		7142 - D225	MD225	R40H5010	R40H5522	NR	NR
	Fd	BX		7142 - D225	MD225	R40H5010	R40H5522	NR	NR
	Fd	BX		7142 - D225	MD225	R40H5010	R40H5522	NR	NR
	Fd	BX		7142 - D225	MD225	R40H5010	R40H5522	NR	NR
	Fd	BX		7142 - D225	MD225	R40H5010	R40H5522	NR	NR
	Fd	BX		7142 - D225	MD225	R40H5010	R40H5522	NR	NR
	Fd	BX		7142 - D225	MD225	R40H5010	R40H5522	NR	NR
	Fd	BX		7142 - D225	MD225	R40H5010	R40H5522	NR	NR
	Fd	BX		7142 - D225	MD225	R40H5010	R40H5522	NR	NR
	Fd	BX		7142 - D225	MD225	R40H5010	R40H5522	NR	NR
	Fd	BX		7142 - D225	MD225	R40H5010	R40H5522	NR	NR
	Fd	BX		7142 - D225	MD225	R40H5010	R40H5522	NR	NR
	Fd	BX		7142 - D225	MD225	R40H5010	R40H5522	NR	NR
	Fd	BX		7142 - D225	MD225	R40H5010	R40H5522	NR	NR
	Fd	BX		7142 - D225	MD225	R40H5010	R40H5522	NR	NR
	Fd	BX		7142 - D225	MD225	R40H5010	R40H5522	NR	NR
	Fd	BX		7142 - D225	MD225	R40H5010	R40H5522	NR	NR

38 - First design, may have external joining tube and uses steel pistons

39 - First design, uses steel pistons.

40 - For chrome plated steel version, use R4090070P

201 - Steel Piston

266 - 10 Stud, Hat Shaped

268 - 5 Stud, Hat Shape

271 - 6 Stud, Hat Shape

272 - 6 Stud, U Shape

273 - 5 Stud, U Shape, .780 Dia. Studs

MERITOR DRUM OR ROTOR NO.	CALIPER OR CYLINDER BORE SIZE	MERITOR CALIPER OR WHEEL CYLINDER (LEFT)	MERITOR CALIPER OR WHEEL CYLINDER (RIGHT)	MERITOR CALIPER OR WHEEL CYLINDER REPAIR KIT	MERITOR CALIPER PISTON	MERITOR MASTER CYLINDER	MERITOR MASTER CYLINDER KIT	MERITOR BRAKE HOSE (LEFT)	MERITOR BRAKE HOSE (RIGHT)
									ITE(Cont.)
170, 1700, 1710, 1723, 1724, 1750, 1753, 1754 SERIES CONVENTIONAL CAB, SCHOOL BUS, TILT CAB(Cont.)									
23-122527-002[272]	2-19/32 "	R42R55245	R42R55245[38]	R402235118	R402238231[201]	R4111993[302]	R4122386	R458632	R458632
23-123572-004[271]	2-19/32 "	R42R55245	R42R55245[38]	R402235118	R402238231[201]	R4111993[302]	R4122386	R4577503	R4577503
23-123552-004[266]	2-19/32 "	R42R55245	R42R55245[38]	R402235118	R402238231[201]	R4111993[302]	R4122386	R4577503	R4577503
R44141858[275]	2-19/32 "	R42R55245	R42R55245[38]	R402235118	R402238231[201]	R4111993[302]	R4122386	R4577503	R4577503
23-122920-002[273]	2-19/32 "	R42R55245	R42R55245[38]	R402235118	R402238231[201]	R4111993[302]	R4122386	R458632	R458632
23-123552-004[266]	2-7/8 "	R429218X	R429218X[39]	R406532	R4090070[40]	R4111993[302]	R4122386	R4577503	R4577503
23-123572-004[271]	2-7/8 "	R429218X	R429218X[39]	R406532	R4090070[40]	R4111993[302]	R4122386	R458632	R458632
23-122527-002[272]	2-7/8 "	R429218X	R429218X[39]	R406532	R4090070[40]	R4111993[302]	R4122386	R4577503	R4577503
R44141476[268]	2-7/8 "	R429218X	R429218X[39]	R406532	R4090070[40]	R4111993[302]	R4122386	R4577503	R4577503
23-122920-002[273]	2-7/8 "	R429218X	R429218X[39]	R406532	R4090070[40]	R4111993[302]	R4122386	R458632	R458632
R44141858[275]	2-7/8 "	R429218X	R429218X[39]	R406532	R4090070[40]	R4111993[302]	R4122386	R4577503	R4577503
23-123552-004[266]	2-7/8 "	R429218X	R429218X[39]	R406532	R4090070[40]	R4111993[302]	R4122386	R4577503	R4577503
23-122920-002[273]	2-7/8 "	R429218X	R429218X[39]	R406532	R4090070[40]	R4111993[302]	R4122386	R458632	R458632
R44141858[275]	2-7/8 "	R429218X	R429218X[39]	R406532	R4090070[40]	R4111993[302]	R4122386	R4577503	R4577503
23-123572-004[271]	2-7/8 "	R429218X	R429218X[39]	R406532	R4090070[40]	R4111993[302]	R4122386	R4577503	R4577503
R44141476[268]	2-7/8 "	R429218X	R429218X[39]	R406532	R4090070[40]	R4111993[302]	R4122386	R458632	R458632
R44141476[268]	2-7/8 "	R429218X	R429218X[39]	R406532	R4090070[40]	R4111993[302]	R4122386	R458632	R458632
23-123572-004[271]	2-7/8 "	R429218X	R429218X[39]	R406532	R4090070[40]	R4111993[302]	R4122386	R4577503	R4577503
23-122920-002[273]	2-7/8 "	R429218X	R429218X[39]	R406532	R4090070[40]	R4111993[302]	R4122386	R4577503	R4577503
23-122527-002[272]	2-7/8 "	R429218X	R429218X[39]	R406532	R4090070[40]	R4111993[302]	R4122386	R4577503	R4577503
23-123552-004[266]	2-7/8 "	R429218X	R429218X[39]	R406532	R4090070[40]	R4111993[302]	R4122386	R458632	R458632
R44141858[275]	2-7/8 "	R429218X	R429218X[39]	R406532	R4090070[40]	R4111993[302]	R4122386	R458632	R458632
23-122527-002[272]	2-7/8 "	R429218X	R429218X[39]	R406532	R4090070[40]	R4111993[302]	R4122386	R458632	R458632
23-122527-002[272]	2-7/8 "	R429218X	R429218X[39]	R406532	R4090070[40]	R4111993[302]	R4122386	R4577503	R4577503
23-122920-002[273]	2-7/8 "	R429218X	R429218X[39]	R406532	R4090070[40]	R4111993[302]	R4122386	R458632	R458632
23-123572-004[271]	2-7/8 "	R429218X	R429218X[39]	R406532	R4090070[40]	R4111993[302]	R4122386	R458632	R458632
R44141858[275]	2-7/8 "	R429218X	R429218X[39]	R406532	R4090070[40]	R4111993[302]	R4122386	R4577503	R4577503
23-123552-004[266]	2-7/8 "	R429218X	R429218X[39]	R406532	R4090070[40]	R4111993[302]	R4122386	R4577503	R4577503
23-123572-004[271]	2-7/8 "	R429218X	R429218X[39]	R406532	R4090070[40]	R4111993[302]	R4122386	R458632	R458632
R44141858[275]	2-7/8 "	R429218X	R429218X[39]	R406532	R4090070[40]	R4111993[302]	R4122386	R458632	R458632
23-122527-002[272]	2-7/8 "	R429218X	R429218X[39]	R406532	R4090070[40]	R4111993[302]	R4122386	R4577503	R4577503
23-122920-002[273]	2-7/8 "	R429218X	R429218X[39]	R406532	R4090070[40]	R4111993[302]	R4122386	R4577503	R4577503
R44141476[268]	2-7/8 "	R429218X	R429218X[39]	R406532	R4090070[40]	R4111993[302]	R4122386	R458632	R458632
23-123552-004[266]	2-7/8 "	R429218X	R429218X[39]	R406532	R4090070[40]	R4111993[302]	R4122386	R4577503	R4577503
23-123572-004[271]	2-7/8 "	R429218X	R429218X[39]	R406532	R4090070[40]	R4111993[302]	R4122386	R4577503	R4577503
23-122920-002[273]	2-7/8 "	R429218X	R429218X[39]	R406532	R4090070[40]	R4111993[302]	R4122386	R4577503	R4577503
23-122527-002[272]	2-7/8 "	R429218X	R429218X[39]	R406532	R4090070[40]	R4111993[302]	R4122386	R458632	R458632
23-122527-002[272]	2-7/8 "	R429218X	R429218X[39]	R406532	R4090070[40]	R4111993[302]	R4122386	R4577503	R4577503
R44141858[275]	2-7/8 "	R429218X	R429218X[39]	R406532	R4090070[40]	R4111993[302]	R4122386	R458632	R458632
23-123552-004[266]	2-7/8 "	R429218X	R429218X[39]	R406532	R4090070[40]	R4111993[302]	R4122386	R4577503	R4577503
23-122920-002[273]	2-7/8 "	R429218X	R429218X[39]	R406532	R4090070[40]	R4111993[302]	R4122386	R458632	R458632
R44141476[268]	2-7/8 "	R429218X	R429218X[39]	R406532	R4090070[40]	R4111993[302]	R4122386	R458632	R458632
23-122527-002[272]	2-7/8 "	R429218X	R429218X[39]	R406532	R4090070[40]	R4111993[302]	R4122386	R458632	R458632
23-123572-004[271]	2-7/8 "	R429218X	R429218X[39]	R406532	R4090070[40]	R4111993[302]	R4122386	R4577503	R4577503
23-123572-004[271]	2-7/8 "	R429218X	R429218X[39]	R406532	R4090070[40]	R4111993[302]	R4122386	R458632	R458632
23-122920-002[273]	2-7/8 "	R429218X	R429218X[39]	R406532	R4090070[40]	R4111993[302]	R4122386	R4577503	R4577503
23-123572-004[271]	2-7/8 "	R429218X	R429218X[39]	R406532	R4090070[40]	R4111993[302]	R4122386	R4577503	R4577503
23-122920-002[273]	2-7/8 "	R429218X	R429218X[39]	R406532	R4090070[40]	R4111993[302]	R4122386	R4577503	R4577503
R44141476[268]	2-7/8 "	R429218X	R429218X[39]	R406532	R4090070[40]	R4111993[302]	R4122386	R4577503	R4577503
R44141476[268]	2-7/8 "	R429218X	R429218X[39]	R406532	R4090070[40]	R4111993[302]	R4122386	R458632	R458632
23-123552-004[266]	2-7/8 "	R429218X	R429218X[39]	R406532	R4090070[40]	R4111993[302]	R4122386	R458632	R458632
R44141858[275]	2-7/8 "	R429218X	R429218X[39]	R406532	R4090070[40]	R4111993[302]	R4122386	R4577503	R4577503
R44141858[275]	2-7/8 "	R429218X	R429218X[39]	R406532	R4090070[40]	R4111993[302]	R4122386	R4577503	R4577503
23-122920-002[273]	2-7/8 "	R429218X	R429218X[39]	R406532	R4090070[40]	R4111993[302]	R4122386	R458632	R458632
23-123552-004[266]	2-7/8 "	R429218X	R429218X[39]	R406532	R4090070[40]	R4111993[302]	R4122386	R458632	R458632
R44141476[268]	2-7/8 "	R429218X	R429218X[39]	R406532	R4090070[40]	R4111993[302]	R4122386	R4577503	R4577503
23-123552-004[266]	2-7/8 "	R429218X	R429218X[39]	R406532	R4090070[40]	R4111993[302]	R4122386	R458632	R458632
23-123572-004[271]	2-7/8 "	R429218X	R429218X[39]	R406532	R4090070[40]	R4111993[302]	R4122386	R458632	R458632
23-123552-004[266]	2-7/8 "	R429218X	R429218X[39]	R406532	R4090070[40]	R4111993[302]	R4122386	R458632	R458632
R44141476[268]	2-7/8 "	R429218X	R429218X[39]	R406532	R4090070[40]	R4111993[302]	R4122386	R4577503	R4577503
R44141476[268]	2-7/8 "	R429218X	R429218X[39]	R406532	R4090070[40]	R4111993[302]	R4122386	R4577503	R4577503
R44141476[268]	2-7/8 "	R429218X	R429218X[39]	R406532	R4090070[40]	R4111993[302]	R4122386	R4577503	R4577503

275 - 5 Stud, U Shape, .656 Dia. Studs

302 - Power Brakes, Dual System

MAKE MODEL YEAR AXLE CODE AXLE WEIGHT	AXLE & BRK. TYPE	BRK. MFG.	BRAKE SIZE	FMSI	MERITOR DISC PAD OR BRAKE SHOE	MERITOR GUIDE PIN OR RETURN SPRING KIT	MERITOR CALIPER HWD. KIT OR RETURN SPRING KIT	MERITOR ADJUSTER KIT (LEFT WHEEL)	MERITOR ADJUSTER KIT (RIGHT WHEEL)
ITE(Cont.)									
170, 1700, 1710, 1723, 1724, 1750, 1753, 1754 SERIES CONVENTIONAL CAB, SCHOOL BUS, TILT CAB(Cont.)									
1984									
	Fd	BX		7142 - D225	MD225	R40H5010	R40H5522	NR	NR
	Fd	BX		7142 - D225	MD225	R40H5010	R40H5522	NR	NR
	Fd	BX		7142 - D225	MD225	R40H5010	R40H5522	NR	NR
	Fd	BX		7142 - D225	MD225	R40H5010	R40H5522	NR	NR
	Fd	BX		7142 - D225	MD225	R40H5010	R40H5522	NR	NR
	Fd	BX		7142 - D225	MD225	R40H5010	R40H5522	NR	NR
	Fd	BX		7142 - D225	MD225	R40H5010	R40H5522	NR	NR
	Fd	BX		7142 - D225	MD225	R40H5010	R40H5522	NR	NR
	Fd	BX		7142 - D225	MD225	R40H5010	R40H5522	NR	NR
	Fd	BX		7142 - D225	MD225	R40H5010	R40H5522	NR	NR
	Fd	BX		7142 - D225	MD225	R40H5010	R40H5522	NR	NR
	Fd	BX		7142 - D225	MD225	R40H5010	R40H5522	NR	NR
	Fd	BX		7142 - D225	MD225	R40H5010	R40H5522	NR	NR
	Fd	BX		7142 - D225	MD225	R40H5010	R40H5522	NR	NR
	Fd	BX		7142 - D225	MD225	R40H5010	R40H5522	NR	NR
S1724, S1754 Conventional									
FA73	Fd	BX		7108 - D184	MD184	R40H5010	R40H5519	NR	NR
	Fd	BX		7108 - D184	MD184	R40H5010	R40H5519	NR	NR
	Fd	BX		7108 - D184	MD184	R40H5010	R40H5519	NR	NR
	Fd	BX		7108 - D184	MD184	R40H5010	R40H5519	NR	NR
S1724, S1754 Conventional									
RA29, 30, 42, 44	Rd	BX		7108 - D184	MD184	R40H5010	R40H5519	NR	NR
	Rd	BX		7108 - D184	MD184	R40H5010	R40H5519	NR	NR
	Rd	BX		7142 - D225	MD225	R40H5010	R40H5522	NR	NR
	Rd	BX		7142 - D225	MD225	R40H5010	R40H5522	NR	NR
	Rd	BX		7142 - D225	MD225	R40H5010	R40H5522	NR	NR
	Rd	BX		7142 - D225	MD225	R40H5010	R40H5522	NR	NR
	Rd	BX		7142 - D225	MD225	R40H5010	R40H5522	NR	NR
	Rd	BX		7142 - D225	MD225	R40H5010	R40H5522	NR	NR
	Rd	BX		7108 - D184	MD184	R40H5010	R40H5519	NR	NR
	Rd	BX		7142 - D225	MD225	R40H5010	R40H5522	NR	NR
	Rd	BX		7142 - D225	MD225	R40H5010	R40H5522	NR	NR
	Rd	BX		7142 - D225	MD225	R40H5010	R40H5522	NR	NR
	Rd	BX		7108 - D184	MD184	R40H5010	R40H5519	NR	NR
	Rd	BX		7142 - D225	MD225	R40H5010	R40H5522	NR	NR
	Rd	BX		7108 - D184	MD184	R40H5010	R40H5519	NR	NR
	Rd	BX		7108 - D184	MD184	R40H5010	R40H5519	NR	NR
	Rd	BX		7142 - D225	MD225	R40H5010	R40H5522	NR	NR
	Rd	BX		7142 - D225	MD225	R40H5010	R40H5522	NR	NR
	Rd	BX		7108 - D184	MD184	R40H5010	R40H5519	NR	NR
	Rd	BX		7142 - D225	MD225	R40H5010	R40H5522	NR	NR
	Rd	BX		7142 - D225	MD225	R40H5010	R40H5522	NR	NR
	Rd	BX		7108 - D184	MD184	R40H5010	R40H5519	NR	NR
	Rd	BX		7108 - D184	MD184	R40H5010	R40H5519	NR	NR
	Rd	BX		7108 - D184	MD184	R40H5010	R40H5519	NR	NR
	Rd	BX		7142 - D225	MD225	R40H5010	R40H5522	NR	NR
	Rd	BX		7142 - D225	MD225	R40H5010	R40H5522	NR	NR
	Rd	BX		7108 - D184	MD184	R40H5010	R40H5519	NR	NR
	Rd	BX		7142 - D225	MD225	R40H5010	R40H5522	NR	NR
	Rd	BX		7108 - D184	MD184	R40H5010	R40H5519	NR	NR
	Rd	BX		7142 - D225	MD225	R40H5010	R40H5522	NR	NR
	Rd	BX		7142 - D225	MD225	R40H5010	R40H5522	NR	NR
	Rd	BX		7142 - D225	MD225	R40H5010	R40H5522	NR	NR
1983									
C1710, C1750 Cargostar Tilt Cab									
FA109, 208	Fa	WG	15 " x 3 "	1245C - 321	R700321	R40H521	R40H9237	R40H3502	R40H3503
	Fm	WG	15 " x 3 "	1245A - 235	R700235	R40H521	R40H9201	R40H3524	R40H3524
C1710, C1750 Cargostar Tilt Cab									
FA118, 127, 139	Fa	WG	15 " x 5 "	1345A - 491	N/A	R40H521	R40H9237	R40H3502	R40H3503
	Fm	WG	15 " x 5 "	1345 - 490	N/A	R40H521	R40H9201	R40H3524	R40H3524

37 - Also available as a New unit

38 - First design, may have external joining tube and uses steel pistons

39 - First design, uses steel pistons.

40 - For chrome plated steel version, use R4090070P

52 - 18" Length

201 - Steel Piston

266 - 10 Stud, Hat Shaped

267 - 10 Stud, U Shaped

268 - 5 Stud, Hat Shape

MERITOR DRUM OR ROTOR NO.	CALIPER OR CYLINDER BORE SIZE	MERITOR CALIPER OR WHEEL CYLINDER (LEFT)	MERITOR CALIPER OR WHEEL CYLINDER (RIGHT)	MERITOR CALIPER OR WHEEL CYLINDER REPAIR KIT	MERITOR CALIPER PISTON	MERITOR MASTER CYLINDER	MERITOR MASTER CYLINDER KIT	MERITOR BRAKE HOSE (LEFT)	MERITOR BRAKE HOSE (RIGHT)
									ITE(Cont.)
170, 1700, 1710, 1723, 1724, 1750, 1753, 1754 SERIES CONVENTIONAL CAB, SCHOOL BUS, TILT CAB(Cont.)									
23-123552-004[266]	2-7/8 "	R429218X	R429218X[39]	R406532	R4090070[40]	R4111993[302]	R4122386	R458632	R458632
R44141476[268]	2-7/8 "	R429218X	R429218X[39]	R406532	R4090070[40]	R4111993[302]	R4122386	R458632	R458632
23-122527-002[272]	2-7/8 "	R429218X	R429218X[39]	R406532	R4090070[40]	R4111993[302]	R4122386	R458632	R458632
23-123552-004[266]	2-7/8 "	R429218X	R429218X[39]	R406532	R4090070[40]	R4111993[302]	R4122386	R4577503	R4577503
R44141858[275]	2-7/8 "	R429218X	R429218X[39]	R406532	R4090070[40]	R4111993[302]	R4122386	R458632	R458632
23-122527-002[272]	2-7/8 "	R429218X	R429218X[39]	R406532	R4090070[40]	R4111993[302]	R4122386	R458632	R458632
R44141858[275]	2-7/8 "	R429218X	R429218X[39]	R406532	R4090070[40]	R4111993[302]	R4122386	R458632	R458632
23-122527-002[272]	2-7/8 "	R429218X	R429218X[39]	R406532	R4090070[40]	R4111993[302]	R4122386	R4577503	R4577503
R44141858[275]	2-7/8 "	R429218X	R429218X[39]	R406532	R4090070[40]	R4111993[302]	R4122386	R458632	R458632
23-122920-002[273]	2-7/8 "	R429218X	R429218X[39]	R406532	R4090070[40]	R4111993[302]	R4122386	R458632	R458632
R44141858[275]	2-7/8 "	R429218X	R429218X[39]	R406532	R4090070[40]	R4111993[302]	R4122386	R4577503	R4577503
23-123572-004[271]	2-7/8 "	R429218X	R429218X[39]	R406532	R4090070[40]	R4111993[302]	R4122386	R4577503	R4577503
23-122527-002[272]	2-7/8 "	R429218X	R429218X[39]	R406532	R4090070[40]	R4111993[302]	R4122386	R458632	R458632
23-123572-004[271]	2-7/8 "	R429218X	R429218X[39]	R406532	R4090070[40]	R4111993[302]	R4122386	R458632	R458632
23-122920-002[273]	2-7/8 "	R429218X	R429218X[39]	R406532	R4090070[40]	R4111993[302]	R4122386	R4577503	R4577503
23-122527-002[272]	3-3/8 "	R42R55099	R42R55098[37]	R4066780	R4090021[201]	R4111993[302]	R4122386	R458632	R458632
23-122527-002[272]	3-3/8 "	R42R55099	R42R55098[37]	R4066780	R4090021[201]	R4111993[302]	R4122386	R458632	R458632
23-122527-002[272]	3-3/8 "	R42R55099	R42R55098[37]	R4066780	R4090021[201]	R4111993[302]	R4122386	R4577503	R4577503
23-122527-002[272]	3-3/8 "	R42R55099	R42R55098[37]	R4066780	R4090021[201]	R4111993[302]	R4122386	R4577503	R4577503
23-123572-004[271]	2-19/32 "	R42R55245	R42R55245[38]	R402235118	R402238231[201]	-	-	R458634[52]	R458634
R44141629[269]	2-19/32 "	R42R55245	R42R55245[38]	R402235118	R402238231[201]	-	-	R458634[52]	R458634
R44141608[267]	2-7/8 "	R429218X	R429218X[39]	R406532	R4090070[40]	-	-	R458634[52]	R458634
23-123572-004[271]	2-7/8 "	R429218X	R429218X[39]	R406532	R4090070[40]	-	-	R458634[52]	R458634
R44141628[269]	2-7/8 "	R429218X	R429218X[39]	R406532	R4090070[40]	-	-	R458634[52]	R458634
R44141608[267]	2-7/8 "	R429218X	R429218X[39]	R406532	R4090070[40]	-	-	R458634[52]	R458634
R44141627[270]	2-7/8 "	R429218X	R429218X[39]	R406532	R4090070[40]	-	-	R458634[52]	R458634
R44141628[269]	2-7/8 "	R429218X	R429218X[39]	R406532	R4090070[40]	-	-	R458634[52]	R458634
R44141629[269]	2-19/32 "	R42R55245	R42R55245[38]	R402235118	R402238231[201]	-	-	R458634[52]	R458634
R44141608[267]	2-7/8 "	R429218X	R429218X[39]	R406532	R4090070[40]	-	-	R458634[52]	R458634
23-122527-002[272]	2-7/8 "	R429218X	R429218X[39]	R406532	R4090070[40]	-	-	R458634[52]	R458634
23-122527-002[272]	2-7/8 "	R429218X	R429218X[39]	R406532	R4090070[40]	-	-	R458634[52]	R458634
R44141627[270]	2-19/32 "	R42R55245	R42R55245[38]	R402235118	R402238231[201]	-	-	R458634[52]	R458634
23-123552-004[266]	2-7/8 "	R429218X	R429218X[39]	R406532	R4090070[40]	-	-	R458634[52]	R458634
R44141628[269]	2-19/32 "	R42R55245	R42R55245[38]	R402235118	R402238231[201]	-	-	R458634[52]	R458634
23-123572-004[271]	2-19/32 "	R42R55245	R42R55245[38]	R402235118	R402238231[201]	-	-	R458634[52]	R458634
R44141629[269]	2-7/8 "	R429218X	R429218X[39]	R406532	R4090070[40]	-	-	R458634[52]	R458634
23-123552-004[266]	2-7/8 "	R429218X	R429218X[39]	R406532	R4090070[40]	-	-	R458634[52]	R458634
R44141628[269]	2-19/32 "	R42R55245	R42R55245[38]	R402235118	R402238231[201]	-	-	R458634[52]	R458634
R44141629[269]	2-7/8 "	R429218X	R429218X[39]	R406532	R4090070[40]	-	-	R458634[52]	R458634
23-123572-004[271]	2-7/8 "	R429218X	R429218X[39]	R406532	R4090070[40]	-	-	R458634[52]	R458634
R44141608[267]	2-19/32 "	R42R55245	R42R55245[38]	R402235118	R402238231[201]	-	-	R458634[52]	R458634
23-123552-004[266]	2-7/8 "	R429218X	R429218X[39]	R406532	R4090070[40]	-	-	R458634[52]	R458634
23-122527-002[272]	2-19/32 "	R42R55245	R42R55245[38]	R402235118	R402238231[201]	-	-	R458634[52]	R458634
R44141608[267]	2-19/32 "	R42R55245	R42R55245[38]	R402235118	R402238231[201]	-	-	R458634[52]	R458634
23-123572-004[271]	2-7/8 "	R429218X	R429218X[39]	R406532	R4090070[40]	-	-	R458634[52]	R458634
R44141628[269]	2-7/8 "	R429218X	R429218X[39]	R406532	R4090070[40]	-	-	R458634[52]	R458634
23-123552-004[266]	2-19/32 "	R42R55245	R42R55245[38]	R402235118	R402238231[201]	-	-	R458634[52]	R458634
23-122527-002[272]	2-7/8 "	R429218X	R429218X[39]	R406532	R4090070[40]	-	-	R458634[52]	R458634
23-123552-004[266]	2-19/32 "	R42R55245	R42R55245[38]	R402235118	R402238231[201]	-	-	R458634[52]	R458634
R44141629[269]	2-7/8 "	R429218X	R429218X[39]	R406532	R4090070[40]	-	-	R458634[52]	R458634
R44141627[270]	2-7/8 "	R429218X	R429218X[39]	R406532	R4090070[40]	-	-	R458634[52]	R458634
R44141627[270]	2-7/8 "	R429218X	R429218X[39]	R406532	R4090070[40]	-	-	R458634[52]	R458634
N/A	1-1/4 "	R4133581	R4133582	R4166923	NR	-	-	-	-
N/A	1-1/4 "	R4133581	R4133582	R4166923	NR	-	-	-	-
N/A		-	-	N/A	N/A	-	-	-	-
N/A		-	-	N/A	N/A	-	-	-	-

269 - 5 Stud, U Shape

270 - 5 Stud, U Shape, .766 Dia. Studs

271 - 6 Stud, Hat Shape

272 - 6 Stud, U Shape

273 - 5 Stud, U Shape, .780 Dia. Studs

275 - 5 Stud, U Shape, .656 Dia. Studs

302 - Power Brakes, Dual System

MAKE MODEL YEAR AXLE CODE AXLE WEIGHT	AXLE & BRK. TYPE	BRK. MFG.	BRAKE SIZE	FMSI	MERITOR DISC PAD OR BRAKE SHOE	MERITOR GUIDE PIN OR RETURN SPRING KIT	MERITOR CALIPER HWD. KIT OR RETURN SPRING KIT	MERITOR ADJUSTER KIT (LEFT WHEEL)	MERITOR ADJUSTER KIT (RIGHT WHEEL)
ITE(Cont.)									
170, 1700, 1710, 1723, 1724, 1750, 1753, 1754 SERIES CONVENTIONAL CAB, SCHOOL BUS, TILT CAB(Cont.)									
1983 C1710, C1750 Cargostar Tilt Cab FA208	Fa	WG	15 " x 3-1/2 "	1280B - 322	R464004	R40H521	R40H9237	R40H3502	R40H3503
	Fm	WG	15 " x 3-1/2 "	1280 - 463	R700463	R40H521	R40H9201	R40H3524	R40H3524
C1710, C1750 Cargostar Tilt Cab FA309, 329, 339	Fd	BX		7142 - D225	MD225	R40H5010	R40H5522	NR	NR
C1710, C1750 Cargostar Tilt Cab FA48, 68, 70, 72	Fa	WG	14 " x 2-1/2 "	1294A - 325	N/A	R40H521	R40H9237	R40H3502	R40H3503
	Fm	WG	14 " x 2-1/2 "	1294 - 296	N/A	R40H521	R40H9201	R40H3524	R40H3524
C1710, C1750 Cargostar Tilt Cab FA71, 73, 101	Fa	WG	15 " x 3 "	1245C - 321	R700321	R40H521	R40H9237	R40H3502	R40H3503
	Fa	WG	15 " x 3-1/2 "	1280B - 322	R464004	R40H521	R40H9237	R40H3502	R40H3503
	Fm	WG	15 " x 3 "	1245A - 235	R700235	R40H521	R40H9201	R40H3524	R40H3524
	Fm	WG	15 " x 3-1/2 "	1280 - 463	R700463	R40H521	R40H9201	R40H3524	R40H3524
C1710, C1750 Cargostar Tilt Cab FA73, 101	Fd	BX		7108 - D184	MD184	R40H5010	R40H5519	NR	NR
C1710, C1750 Cargostar Tilt Cab FA73, 101, 104	Fd	BX		7108 - D184	MD184	R40H5010	R40H5519	NR	NR
C1710, C1750 Cargostar Tilt Cab FA74	Fa	WG	15 " x 3 "	1245C - 321	R700321	R40H521	R40H9237	R40H3502	R40H3503
	Fm	WG	15 " x 3 "	1245A - 235	R700235	R40H521	R40H9201	R40H3524	R40H3524
C1710, C1750 Cargostar Tilt Cab FA78, 81	Fa	WG	15 " x 3 "	1245C - 321	R700321	R40H521	R40H9237	R40H3502	R40H3503
C1710, C1750 Cargostar Tilt Cab FA89, 91, 98	Fa	WG	15 " x 3 "	1245C - 321	R700321	R40H521	R40H9237	R40H3502	R40H3503
	Fm	WG	15 " x 3 "	1245A - 235	R700235	R40H521	R40H9201	R40H3524	R40H3524
C1710, C1750 Cargostar Tilt Cab RA184	Ra	WG	15 " x 4 "	4645A - 376	Discontinued	R40H597	R40H9200	R40H3540	R40H3541
	Rm	WG	15 " x 4 "	4645A - 376	Discontinued	R40H597	R40H9200	R40H3518	R404148
C1710, C1750 Cargostar Tilt Cab RA25, 184	Ra	WG	15 " x 5 "	1252 - 346	R700346	R40H597	R40H9200	R40H3540	R40H3541
	Rm	WG	15 " x 5 "	1252 - 346	R700346	R40H597	R40H9200	R40H3518	R404148
C1710, C1750 Cargostar Tilt Cab RA29, 30, 187	Ra	WG	15 " x 5 "	1252 - 346	R700346	R40H597	R40H9200	R40H3540	R40H3541
	Rm	WG	15 " x 5 "	1252 - 346	R700346	R40H597	R40H9200	R40H3518	R404148
C1710, C1750 Cargostar Tilt Cab RA29, 30, 39, 42, 187, 189, 199	Rd	BX		7108 - D184	MD184	R40H5010	R40H5519	NR	NR
C1710, C1750 Cargostar Tilt Cab RA30, 187	Ra	WG	16 " x 5 "	1254 - 385	N/A	R40H597	R40H9200	N/A	N/A
	Rm	WG	16 " x 5 "	1254 - 385	N/A	R40H597	R40H9200	R404149	R404150
C1710, C1750 Cargostar Tilt Cab RA30, 39, 44, 186, 189	Ra	WG	15 " x 6 "	4596 - 381	R700381	R40H597	R40H9200	R40H3540	R40H3541
	Rm	WG	15 " x 6 "	4596 - 381	R700381	R40H597	R40H9200	R40H3518	R404148
C1710, C1750 Cargostar Tilt Cab RA39, 199	Ra	WG	15 " x 7 "	4597 - 383	R700383	R40H597	R40H9200	R40H3540	R40H3541
	Rm	WG	15 " x 7 "	4597 - 383	R700383	R40H597	R40H9200	R40H3518	R404148

37 - Also available as a New unit

38 - First design, may have external joining tube and uses steel pistons

39 - First design, uses steel pistons.

40 - For chrome plated steel version, use R4090070P

201 - Steel Piston

269 - 5 Stud, U Shape

272 - 6 Stud, U Shape

MERITOR DRUM OR ROTOR NO.	CALIPER OR CYLINDER BORE SIZE	MERITOR CALIPER OR WHEEL CYLINDER (LEFT)	MERITOR CALIPER OR WHEEL CYLINDER (RIGHT)	MERITOR CALIPER OR WHEEL CYLINDER REPAIR KIT	MERITOR CALIPER PISTON	MERITOR MASTER CYLINDER	MERITOR MASTER CYLINDER KIT	MERITOR BRAKE HOSE (LEFT)	MERITOR BRAKE HOSE (RIGHT)
									ITE(Cont.)
170, 1700, 1710, 1723, 1724, 1750, 1753, 1754 SERIES CONVENTIONAL CAB, SCHOOL BUS, TILT CAB(Cont.)									
N/A	1-1/4 "	R4133581	R4133582	R4166923	NR	-	-	-	-
N/A	1-1/4 "	R4133581	R4133582	R4166923	NR	-	-	-	-
23-122701-002[269]	2-7/8 "	R429218X	R429218X[39]	R406532	R4090070[40]	-	-	-	-
N/A	1-1/8 "	R4133714	R4133715	R4166926	NR	-	-	-	-
N/A	1-1/8 "	R4133714	R4133715	R4166926	NR	-	-	-	-
N/A	1-1/4 "	R4133581	R4133582	R4166923	NR	-	-	-	-
N/A	1-1/4 "	R4133581	R4133582	R4166923	NR	-	-	-	-
N/A	1-1/4 "	R4133581	R4133582	R4166923	NR	-	-	-	-
N/A	1-1/4 "	R4133581	R4133582	R4166923	NR	-	-	-	-
23-122527-002[272]	3-3/8 "	R42R55099	R42R55098[37]	R4066780	R4090021[201]	-	-	-	-
23-122527-002[272]	2-19/32 "	R42R55245	R42R55245[38]	R402235118	R402238231[201]	-	-	-	-
N/A	1-1/4 "	R4133581	R4133582	R4166923	NR	-	-	-	-
N/A	1-1/4 "	R4133581	R4133582	R4166923	NR	-	-	-	-
N/A	1-1/4 "	R4133581	R4133582	R4166923	NR	-	-	-	-
N/A	1-1/4 "	R4133581	R4133582	R4166923	NR	-	-	-	-
N/A	1-1/4 "	R4133581	R4133582	R4166923	NR	-	-	-	-
N/A	1-1/2 "	R4133580	R4133580	Discontinued	NR	-	-	-	-
N/A	1-1/2 "	R4133580	R4133580	Discontinued	NR	-	-	-	-
N/A	1-1/2 "	R4133580	R4133580	Discontinued	NR	-	-	-	-
N/A	1-1/2 "	R4133580	R4133580	Discontinued	NR	-	-	-	-
N/A	1-1/2 "	R4133580	R4133580	Discontinued	NR	-	-	-	-
N/A	1-1/2 "	R4133580	R4133580	Discontinued	NR	-	-	-	-
23-122527-002[272]	2-19/32 "	R42R55245	R42R55245[38]	R402235118	R402238231[201]	-	-	-	-
N/A	1-5/8 "	R4133338	R4133338	R4166689	NR	-	-	-	-
N/A	1-5/8 "	R4133338	R4133338	R4166689	NR	-	-	-	-
N/A	1-5/8 "	R4133338	R4133338	R4166689	NR	-	-	-	-
N/A	1-5/8 "	R4133338	R4133338	R4166689	NR	-	-	-	-
N/A	1-5/8 "	R4133338	R4133338	R4166689	NR	-	-	-	-
N/A	1-5/8 "	R4133338	R4133338	R4166689	NR	-	-	-	-

MAKE MODEL YEAR AXLE CODE AXLE WEIGHT	AXLE & BRK. TYPE	BRK. MFG.	BRAKE SIZE	FMSI	MERITOR DISC PAD OR BRAKE SHOE	MERITOR GUIDE PIN OR RETURN SPRING KIT	MERITOR CALIPER HWD. KIT OR RETURN SPRING KIT	MERITOR ADJUSTER KIT (LEFT WHEEL)	MERITOR ADJUSTER KIT (RIGHT WHEEL)
ITE(Cont.)									
170, 1700, 1710, 1723, 1724, 1750, 1753, 1754 SERIES CONVENTIONAL CAB, SCHOOL BUS, TILT CAB(Cont.)									
1983 C1710, C1750 Cargostar Tilt Cab RA39, 42, 44, 186, 199	Rd	BX		7142 - D225	MD225	R40H5010	R40H5522	NR	NR
C1710, C1750 Cargostar Tilt Cab RA44, 186	Ra	WG	15 " x 7 "	4597 - 383	R700383	R40H597	R40H9200	N/A	N/A
	Rm	WG	15 " x 7 "	4597 - 383	R700383	R40H597	R40H9200	R40H3518	R404148
C1710, C1750 Cargostar Tilt Cab RA47, 57	Ra	WG	16 " x 6 "	1255 - 386	N/A	R40H597	R40H9200	N/A	N/A
	Rm	WG	16 " x 6 "	1255 - 386	N/A	R40H597	R40H9200	R404149	R404150
S1723, S1753 School Bus	Fd	BX		7108 - D184	MD184	R40H5010	R40H5519	NR	NR
	Fd	BX		7108 - D184	MD184	R40H5010	R40H5519	NR	NR
	Fd	BX		7108 - D184	MD184	R40H5010	R40H5519	NR	NR
	Fd	BX		7108 - D184	MD184	R40H5010	R40H5519	NR	NR
	Fd	BX		7108 - D184	MD184	R40H5010	R40H5519	NR	NR
	Fd	BX		7108 - D184	MD184	R40H5010	R40H5519	NR	NR
	Fd	BX		7108 - D184	MD184	R40H5010	R40H5519	NR	NR
	Fd	BX		7108 - D184	MD184	R40H5010	R40H5519	NR	NR
	Fd	BX		7108 - D184	MD184	R40H5010	R40H5519	NR	NR
	Fd	BX		7108 - D184	MD184	R40H5010	R40H5519	NR	NR
	Fd	BX		7108 - D184	MD184	R40H5010	R40H5519	NR	NR
	Fd	BX		7108 - D184	MD184	R40H5010	R40H5519	NR	NR
	Fd	BX		7108 - D184	MD184	R40H5010	R40H5519	NR	NR
	Fd	BX		7108 - D184	MD184	R40H5010	R40H5519	NR	NR
	Fd	BX		7108 - D184	MD184	R40H5010	R40H5519	NR	NR
	Fd	BX		7108 - D184	MD184	R40H5010	R40H5519	NR	NR
	Fd	BX		7108 - D184	MD184	R40H5010	R40H5519	NR	NR
	Fd	BX		7108 - D184	MD184	R40H5010	R40H5519	NR	NR
	Fd	BX		7108 - D184	MD184	R40H5010	R40H5519	NR	NR
	Fd	BX		7108 - D184	MD184	R40H5010	R40H5519	NR	NR
	Fd	BX		7108 - D184	MD184	R40H5010	R40H5519	NR	NR
	Fd	BX		7108 - D184	MD184	R40H5010	R40H5519	NR	NR
	Fd	BX		7108 - D184	MD184	R40H5010	R40H5519	NR	NR
	Fd	BX		7108 - D184	MD184	R40H5010	R40H5519	NR	NR
	Fd	BX		7108 - D184	MD184	R40H5010	R40H5519	NR	NR
	Fd	BX		7108 - D184	MD184	R40H5010	R40H5519	NR	NR
	Fd	BX		7108 - D184	MD184	R40H5010	R40H5519	NR	NR
	Fd	BX		7108 - D184	MD184	R40H5010	R40H5519	NR	NR
	Fd	BX		7108 - D184	MD184	R40H5010	R40H5519	NR	NR
	Fd	BX		7108 - D184	MD184	R40H5010	R40H5519	NR	NR
	Fd	BX		7108 - D184	MD184	R40H5010	R40H5519	NR	NR
	Fd	BX		7108 - D184	MD184	R40H5010	R40H5519	NR	NR
	Fd	BX		7108 - D184	MD184	R40H5010	R40H5519	NR	NR
	Fd	BX		7108 - D184	MD184	R40H5010	R40H5519	NR	NR
	Fd	BX		7108 - D184	MD184	R40H5010	R40H5519	NR	NR
	Fd	BX		7108 - D184	MD184	R40H5010	R40H5519	NR	NR
	Fd	BX		7108 - D184	MD184	R40H5010	R40H5519	NR	NR
	Fd	BX		7108 - D184	MD184	R40H5010	R40H5519	NR	NR
	Fd	BX		7108 - D184	MD184	R40H5010	R40H5519	NR	NR
	Fd	BX		7108 - D184	MD184	R40H5010	R40H5519	NR	NR
S1723, S1753 School Bus FA101	Fd	BX		7108 - D184	MD184	R40H5010	R40H5519	NR	NR
	Fd	BX		7108 - D184	MD184	R40H5010	R40H5519	NR	NR
	Fd	BX		7108 - D184	MD184	R40H5010	R40H5519	NR	NR
	Fd	BX		7108 - D184	MD184	R40H5010	R40H5519	NR	NR
	Fd	BX		7108 - D184	MD184	R40H5010	R40H5519	NR	NR
	Fd	BX		7108 - D184	MD184	R40H5010	R40H5519	NR	NR
	Fd	BX		7108 - D184	MD184	R40H5010	R40H5519	NR	NR
	Fd	BX		7108 - D184	MD184	R40H5010	R40H5519	NR	NR
	Fd	BX		7108 - D184	MD184	R40H5010	R40H5519	NR	NR
	Fd	BX		7108 - D184	MD184	R40H5010	R40H5519	NR	NR
	Fd	BX		7108 - D184	MD184	R40H5010	R40H5519	NR	NR

37 - Also available as a New unit
38 - First design, may have external joining tube and uses steel pistons
39 - First design, uses steel pistons.
40 - For chrome plated steel version, use R4090070P
53 - Power Brakes
201 - Steel Piston
266 - 10 Stud, Hat Shaped
268 - 5 Stud, Hat Shape
271 - 6 Stud, Hat Shape

MERITOR DRUM OR ROTOR NO.	CALIPER OR CYLINDER BORE SIZE	MERITOR CALIPER OR WHEEL CYLINDER (LEFT)	MERITOR CALIPER OR WHEEL CYLINDER (RIGHT)	MERITOR CALIPER OR WHEEL CYLINDER REPAIR KIT	MERITOR CALIPER PISTON	MERITOR MASTER CYLINDER	MERITOR MASTER CYLINDER KIT	MERITOR BRAKE HOSE (LEFT)	MERITOR BRAKE HOSE (RIGHT)
									ITE(Cont.)
170, 1700, 1710, 1723, 1724, 1750, 1753, 1754 SERIES CONVENTIONAL CAB, SCHOOL BUS, TILT CAB(Cont.)									
N/A	2-7/8 "	R429218X	R429218X[39]	R406532	R4090070[40]	-	-	-	-
N/A	1-5/8 "	R4133338	R4133338	R4166689	NR	-	-	-	-
N/A	1-5/8 "	R4133338	R4133338	R4166689	NR	-	-	-	-
N/A	1-3/4 "	R4133400	R4133400	R4166917	NR	-	-	-	-
N/A	1-3/4 "	R4133400	R4133400	R4166917	NR	-	-	-	-
23-122920-002[273]	3-3/8 "	R42R55099	R42R55098[37]	R4066780	R4090021[201]	N/A[53]	-	R4577503	R4577503
R44141476[268]	3-3/8 "	R42R55099	R42R55098[37]	R4066780	R4090021[201]	R4111993[302]	R4122386	R4577503	R4577503
23-123572-004[271]	3-3/8 "	R42R55099	R42R55098[37]	R4066780	R4090021[201]	R4111993[302]	R4122386	R458632	R458632
23-123552-004[266]	3-3/8 "	R42R55099	R42R55098[37]	R4066780	R4090021[201]	N/A[53]	-	R458632	R458632
R44141476[268]	3-3/8 "	R42R55099	R42R55098[37]	R4066780	R4090021[201]	R4111993[302]	R4122386	R458632	R458632
23-122920-002[273]	3-3/8 "	R42R55099	R42R55098[37]	R4066780	R4090021[201]	N/A[53]	-	R458632	R458632
R44141858[275]	3-3/8 "	R42R55099	R42R55098[37]	R4066780	R4090021[201]	N/A[53]	-	R4577503	R4577503
23-123552-004[266]	3-3/8 "	R42R55099	R42R55098[37]	R4066780	R4090021[201]	N/A[53]	-	R4577503	R4577503
23-123572-004[271]	3-3/8 "	R42R55099	R42R55098[37]	R4066780	R4090021[201]	R4111993[302]	R4122386	R4577503	R4577503
23-122920-002[273]	3-3/8 "	R42R55099	R42R55098[37]	R4066780	R4090021[201]	R4111993[302]	R4122386	R458632	R458632
23-122920-002[273]	3-3/8 "	R42R55099	R42R55098[37]	R4066780	R4090021[201]	N/A[53]	-	R4577503	R4577503
23-123552-004[266]	3-3/8 "	R42R55099	R42R55098[37]	R4066780	R4090021[201]	N/A[53]	-	R458632	R458632
R44141858[275]	3-3/8 "	R42R55099	R42R55098[37]	R4066780	R4090021[201]	N/A[53]	-	R4577503	R4577503
R44141476[268]	3-3/8 "	R42R55099	R42R55098[37]	R4066780	R4090021[201]	R4111993[302]	R4122386	R458632	R458632
23-123552-004[266]	3-3/8 "	R42R55099	R42R55098[37]	R4066780	R4090021[201]	R4111993[302]	R4122386	R4577503	R4577503
23-123572-004[271]	3-3/8 "	R42R55099	R42R55098[37]	R4066780	R4090021[201]	R4111993[302]	R4122386	R4577503	R4577503
23-123552-004[266]	3-3/8 "	R42R55099	R42R55098[37]	R4066780	R4090021[201]	R4111993[302]	R4122386	R4577503	R4577503
23-123572-004[271]	3-3/8 "	R42R55099	R42R55098[37]	R4066780	R4090021[201]	R4111993[302]	R4122386	R458632	R458632
R44141476[268]	3-3/8 "	R42R55099	R42R55098[37]	R4066780	R4090021[201]	R4111993[302]	R4122386	R4577503	R4577503
R44141858[275]	3-3/8 "	R42R55099	R42R55098[37]	R4066780	R4090021[201]	N/A[53]	-	R458632	R458632
23-122920-002[273]	3-3/8 "	R42R55099	R42R55098[37]	R4066780	R4090021[201]	R4111993[302]	R4122386	R458632	R458632
R44141858[275]	3-3/8 "	R42R55099	R42R55098[37]	R4066780	R4090021[201]	R4111993[302]	R4122386	R458632	R458632
R44141858[275]	3-3/8 "	R42R55099	R42R55098[37]	R4066780	R4090021[201]	R4111993[302]	R4122386	R458632	R458632
23-123552-004[266]	3-3/8 "	R42R55099	R42R55098[37]	R4066780	R4090021[201]	R4111993[302]	R4122386	R458632	R458632
R44141858[275]	3-3/8 "	R42R55099	R42R55098[37]	R4066780	R4090021[201]	R4111993[302]	R4122386	R4577503	R4577503
23-123572-004[271]	3-3/8 "	R42R55099	R42R55098[37]	R4066780	R4090021[201]	N/A[53]	-	R458632	R458632
23-122920-002[273]	3-3/8 "	R42R55099	R42R55098[37]	R4066780	R4090021[201]	R4111993[302]	R4122386	R4577503	R4577503
23-122920-002[273]	3-3/8 "	R42R55099	R42R55098[37]	R4066780	R4090021[201]	R4111993[302]	R4122386	R4577503	R4577503
R44141476[268]	3-3/8 "	R42R55099	R42R55098[37]	R4066780	R4090021[201]	N/A[53]	-	R4577503	R4577503
R44141476[268]	3-3/8 "	R42R55099	R42R55098[37]	R4066780	R4090021[201]	N/A[53]	-	R4577503	R4577503
23-122920-002[273]	3-3/8 "	R42R55099	R42R55098[37]	R4066780	R4090021[201]	N/A[53]	-	R458632	R458632
23-123552-004[266]	3-3/8 "	R42R55099	R42R55098[37]	R4066780	R4090021[201]	N/A[53]	-	R4577503	R4577503
23-123572-004[271]	3-3/8 "	R42R55099	R42R55098[37]	R4066780	R4090021[201]	N/A[53]	-	R458632	R458632
R44141858[275]	3-3/8 "	R42R55099	R42R55098[37]	R4066780	R4090021[201]	R4111993[302]	R4122386	R4577503	R4577503
23-123552-004[266]	3-3/8 "	R42R55099	R42R55098[37]	R4066780	R4090021[201]	R4111993[302]	R4122386	R458632	R458632
R44141476[268]	3-3/8 "	R42R55099	R42R55098[37]	R4066780	R4090021[201]	N/A[53]	-	R458632	R458632
R44141476[268]	3-3/8 "	R42R55099	R42R55098[37]	R4066780	R4090021[201]	N/A[53]	-	R458632	R458632
23-123572-004[271]	3-3/8 "	R42R55099	R42R55098[37]	R4066780	R4090021[201]	N/A[53]	-	R4577503	R4577503
R44141858[275]	3-3/8 "	R42R55099	R42R55098[37]	R4066780	R4090021[201]	N/A[53]	-	R458632	R458632
23-123572-004[271]	3-3/8 "	R42R55099	R42R55098[37]	R4066780	R4090021[201]	N/A[53]	-	R4577503	R4577503
R44141476[268]	2-19/32 "	R42R55245	R42R55245[38]	R402235118	R402238231[201]	R4111993[302]	R4122386	R458632	R458632
23-123572-004[271]	2-19/32 "	R42R55245	R42R55245[38]	R402235118	R402238231[201]	R4111993[302]	R4122386	R4577503	R4577503
R44141858[275]	2-19/32 "	R42R55245	R42R55245[38]	R402235118	R402238231[201]	N/A[53]	-	R458632	R458632
23-122527-002[272]	2-19/32 "	R42R55245	R42R55245[38]	R402235118	R402238231[201]	R4111993[302]	R4122386	R4577503	R4577503
23-122920-002[273]	2-19/32 "	R42R55245	R42R55245[38]	R402235118	R402238231[201]	N/A[53]	-	R458632	R458632
R44141476[268]	2-19/32 "	R42R55245	R42R55245[38]	R402235118	R402238231[201]	N/A[53]	-	R4577503	R4577503
23-123572-004[271]	2-19/32 "	R42R55245	R42R55245[38]	R402235118	R402238231[201]	N/A[53]	-	R4577503	R4577503
23-123552-004[266]	2-19/32 "	R42R55245	R42R55245[38]	R402235118	R402238231[201]	R4111993[302]	R4122386	R4577503	R4577503
23-123552-004[266]	2-19/32 "	R42R55245	R42R55245[38]	R402235118	R402238231[201]	R4111993[302]	R4122386	R458632	R458632
23-123572-004[271]	2-19/32 "	R42R55245	R42R55245[38]	R402235118	R402238231[201]	N/A[53]	-	R458632	R458632
R44141858[275]	2-19/32 "	R42R55245	R42R55245[38]	R402235118	R402238231[201]	R4111993[302]	R4122386	R4577503	R4577503

272 - 6 Stud, U Shape

273 - 5 Stud, U Shape, .780 Dia. Studs

275 - 5 Stud, U Shape, .656 Dia. Studs

302 - Power Brakes, Dual System

MAKE MODEL YEAR AXLE CODE AXLE WEIGHT	AXLE & BRK. TYPE	BRK. MFG.	BRAKE SIZE	FMSI	MERITOR DISC PAD OR BRAKE SHOE	MERITOR GUIDE PIN OR RETURN SPRING KIT	MERITOR CALIPER HWD. KIT OR RETURN SPRING KIT	MERITOR ADJUSTER KIT (LEFT WHEEL)	MERITOR ADJUSTER KIT (RIGHT WHEEL)
ITE(Cont.)									
170, 1700, 1710, 1723, 1724, 1750, 1753, 1754 SERIES CONVENTIONAL CAB, SCHOOL BUS, TILT CAB(Cont.)									
1983 S1723, S1753 School Bus FA101	Fd	BX		7108 - D184	MD184	R40H5010	R40H5519	NR	NR
	Fd	BX		7108 - D184	MD184	R40H5010	R40H5519	NR	NR
	Fd	BX		7108 - D184	MD184	R40H5010	R40H5519	NR	NR
	Fd	BX		7108 - D184	MD184	R40H5010	R40H5519	NR	NR
	Fd	BX		7108 - D184	MD184	R40H5010	R40H5519	NR	NR
	Fd	BX		7108 - D184	MD184	R40H5010	R40H5519	NR	NR
	Fd	BX		7108 - D184	MD184	R40H5010	R40H5519	NR	NR
	Fd	BX		7108 - D184	MD184	R40H5010	R40H5519	NR	NR
	Fd	BX		7108 - D184	MD184	R40H5010	R40H5519	NR	NR
	Fd	BX		7108 - D184	MD184	R40H5010	R40H5519	NR	NR
	Fd	BX		7108 - D184	MD184	R40H5010	R40H5519	NR	NR
	Fd	BX		7108 - D184	MD184	R40H5010	R40H5519	NR	NR
	Fd	BX		7108 - D184	MD184	R40H5010	R40H5519	NR	NR
S1723, S1753 School Bus FA309, 329, 339	Fd	BX		7142 - D225	MD225	R40H5010	R40H5522	NR	NR
	Fd	BX		7142 - D225	MD225	R40H5010	R40H5522	NR	NR
	Fd	BX		7142 - D225	MD225	R40H5010	R40H5522	NR	NR
	Fd	BX		7142 - D225	MD225	R40H5010	R40H5522	NR	NR
	Fd	BX		7142 - D225	MD225	R40H5010	R40H5522	NR	NR
	Fd	BX		7142 - D225	MD225	R40H5010	R40H5522	NR	NR
	Fd	BX		7142 - D225	MD225	R40H5010	R40H5522	NR	NR
	Fd	BX		7142 - D225	MD225	R40H5010	R40H5522	NR	NR
	Fd	BX		7142 - D225	MD225	R40H5010	R40H5522	NR	NR
	Fd	BX		7142 - D225	MD225	R40H5010	R40H5522	NR	NR
	Fd	BX		7142 - D225	MD225	R40H5010	R40H5522	NR	NR
	Fd	BX		7142 - D225	MD225	R40H5010	R40H5522	NR	NR
	Fd	BX		7142 - D225	MD225	R40H5010	R40H5522	NR	NR
	Fd	BX		7142 - D225	MD225	R40H5010	R40H5522	NR	NR
	Fd	BX		7142 - D225	MD225	R40H5010	R40H5522	NR	NR
	Fd	BX		7142 - D225	MD225	R40H5010	R40H5522	NR	NR
	Fd	BX		7142 - D225	MD225	R40H5010	R40H5522	NR	NR
	Fd	BX		7142 - D225	MD225	R40H5010	R40H5522	NR	NR
	Fd	BX		7142 - D225	MD225	R40H5010	R40H5522	NR	NR
	Fd	BX		7142 - D225	MD225	R40H5010	R40H5522	NR	NR
	Fd	BX		7142 - D225	MD225	R40H5010	R40H5522	NR	NR
	Fd	BX		7142 - D225	MD225	R40H5010	R40H5522	NR	NR
	Fd	BX		7142 - D225	MD225	R40H5010	R40H5522	NR	NR
	Fd	BX		7142 - D225	MD225	R40H5010	R40H5522	NR	NR
	Fd	BX		7142 - D225	MD225	R40H5010	R40H5522	NR	NR
	Fd	BX		7142 - D225	MD225	R40H5010	R40H5522	NR	NR
	Fd	BX		7142 - D225	MD225	R40H5010	R40H5522	NR	NR
	Fd	BX		7142 - D225	MD225	R40H5010	R40H5522	NR	NR
	Fd	BX		7142 - D225	MD225	R40H5010	R40H5522	NR	NR
	Fd	BX		7142 - D225	MD225	R40H5010	R40H5522	NR	NR
	Fd	BX		7142 - D225	MD225	R40H5010	R40H5522	NR	NR
	Fd	BX		7142 - D225	MD225	R40H5010	R40H5522	NR	NR
	Fd	BX		7142 - D225	MD225	R40H5010	R40H5522	NR	NR
	Fd	BX		7142 - D225	MD225	R40H5010	R40H5522	NR	NR
	Fd	BX		7142 - D225	MD225	R40H5010	R40H5522	NR	NR
	Fd	BX		7142 - D225	MD225	R40H5010	R40H5522	NR	NR
	Fd	BX		7142 - D225	MD225	R40H5010	R40H5522	NR	NR
	Fd	BX		7142 - D225	MD225	R40H5010	R40H5522	NR	NR
	Fd	BX		7142 - D225	MD225	R40H5010	R40H5522	NR	NR
	Fd	BX		7142 - D225	MD225	R40H5010	R40H5522	NR	NR
	Fd	BX		7142 - D225	MD225	R40H5010	R40H5522	NR	NR
	Fd	BX		7142 - D225	MD225	R40H5010	R40H5522	NR	NR
	Fd	BX		7142 - D225	MD225	R40H5010	R40H5522	NR	NR
	Fd	BX		7142 - D225	MD225	R40H5010	R40H5522	NR	NR
	Fd	BX		7142 - D225	MD225	R40H5010	R40H5522	NR	NR
	Fd	BX		7142 - D225	MD225	R40H5010	R40H5522	NR	NR
	Fd	BX		7142 - D225	MD225	R40H5010	R40H5522	NR	NR
	Fd	BX		7142 - D225	MD225	R40H5010	R40H5522	NR	NR

38 - First design, may have external joining tube and uses steel pistons
39 - First design, uses steel pistons.
40 - For chrome plated steel version, use R4090070P
53 - Power Brakes
201 - Steel Piston
266 - 10 Stud, Hat Shaped
268 - 5 Stud, Hat Shape
271 - 6 Stud, Hat Shape
272 - 6 Stud, U Shape

MERITOR DRUM OR ROTOR NO.	CALIPER OR CYLINDER BORE SIZE	MERITOR CALIPER OR WHEEL CYLINDER (LEFT)	MERITOR CALIPER OR WHEEL CYLINDER (RIGHT)	MERITOR CALIPER OR WHEEL CYLINDER REPAIR KIT	MERITOR CALIPER PISTON	MERITOR MASTER CYLINDER	MERITOR MASTER CYLINDER KIT	MERITOR BRAKE HOSE (LEFT)	MERITOR BRAKE HOSE (RIGHT)
									ITE(Cont.)
170, 1700, 1710, 1723, 1724, 1750, 1753, 1754 SERIES CONVENTIONAL CAB, SCHOOL BUS, TILT CAB(Cont.)									
23-123552-004[266]	2-19/32 "	R42R55245	R42R55245[38]	R402235118	R402238231[201]	N/A[53]	-	R4577503	R4577503
R44141476[268]	2-19/32 "	R42R55245	R42R55245[38]	R402235118	R402238231[201]	N/A[53]	-	R458632	R458632
23-122527-002[272]	2-19/32 "	R42R55245	R42R55245[38]	R402235118	R402238231[201]	R4111993[302]	R4122386	R458632	R458632
23-122920-002[273]	2-19/32 "	R42R55245	R42R55245[38]	R402235118	R402238231[201]	R4111993[302]	R4122386	R4577503	R4577503
23-122920-002[273]	2-19/32 "	R42R55245	R42R55245[38]	R402235118	R402238231[201]	R4111993[302]	R4122386	R458632	R458632
R44141476[268]	2-19/32 "	R42R55245	R42R55245[38]	R402235118	R402238231[201]	R4111993[302]	R4122386	R4577503	R4577503
23-122920-002[273]	2-19/32 "	R42R55245	R42R55245[38]	R402235118	R402238231[201]	N/A[53]	-	R4577503	R4577503
23-122527-002[272]	2-19/32 "	R42R55245	R42R55245[38]	R402235118	R402238231[201]	N/A[53]	-	R458632	R458632
23-123552-004[266]	2-19/32 "	R42R55245	R42R55245[38]	R402235118	R402238231[201]	N/A[53]	-	R458632	R458632
23-123572-004[271]	2-19/32 "	R42R55245	R42R55245[38]	R402235118	R402238231[201]	R4111993[302]	R4122386	R458632	R458632
R44141858[275]	2-19/32 "	R42R55245	R42R55245[38]	R402235118	R402238231[201]	R4111993[302]	R4122386	R458632	R458632
R44141858[275]	2-19/32 "	R42R55245	R42R55245[38]	R402235118	R402238231[201]	N/A[53]	-	R4577503	R4577503
23-122527-002[272]	2-19/32 "	R42R55245	R42R55245[38]	R402235118	R402238231[201]	N/A[53]	-	R4577503	R4577503
23-123552-004[266]	2-7/8 "	R429218X	R429218X[39]	R406532	R4090070[40]	R4111993[302]	R4122386	R4577503	R4577503
23-122920-002[273]	2-7/8 "	R429218X	R429218X[39]	R406532	R4090070[40]	R4111993[302]	R4122386	R458632	R458632
23-123572-004[271]	2-7/8 "	R429218X	R429218X[39]	R406532	R4090070[40]	N/A[53]	-	R458632	R458632
R44141858[275]	2-7/8 "	R429218X	R429218X[39]	R406532	R4090070[40]	R4111993[302]	R4122386	R4577503	R4577503
23-123552-004[266]	2-7/8 "	R429218X	R429218X[39]	R406532	R4090070[40]	N/A[53]	-	R458632	R458632
23-122527-002[272]	2-7/8 "	R429218X	R429218X[39]	R406532	R4090070[40]	R4111993[302]	R4122386	R4577503	R4577503
R44141476[268]	2-7/8 "	R429218X	R429218X[39]	R406532	R4090070[40]	R4111993[302]	R4122386	R458632	R458632
23-122920-002[273]	2-7/8 "	R429218X	R429218X[39]	R406532	R4090070[40]	N/A[53]	-	R4577503	R4577503
R44141476[268]	2-7/8 "	R429218X	R429218X[39]	R406532	R4090070[40]	N/A[53]	-	R458632	R458632
23-122527-002[272]	2-7/8 "	R429218X	R429218X[39]	R406532	R4090070[40]	R4111993[302]	R4122386	R4577503	R4577503
23-122920-002[273]	2-7/8 "	R429218X	R429218X[39]	R406532	R4090070[40]	N/A[53]	-	R458632	R458632
R44141476[268]	2-7/8 "	R429218X	R429218X[39]	R406532	R4090070[40]	R4111993[302]	R4122386	R458632	R458632
23-122527-002[272]	2-7/8 "	R429218X	R429218X[39]	R406532	R4090070[40]	R4111993[302]	R4122386	R458632	R458632
R44141476[268]	2-7/8 "	R429218X	R429218X[39]	R406532	R4090070[40]	N/A[53]	-	R4577503	R4577503
23-122527-002[272]	2-7/8 "	R429218X	R429218X[39]	R406532	R4090070[40]	N/A[53]	-	R458632	R458632
23-122920-002[273]	2-7/8 "	R429218X	R429218X[39]	R406532	R4090070[40]	R4111993[302]	R4122386	R4577503	R4577503
R44141476[268]	2-7/8 "	R429218X	R429218X[39]	R406532	R4090070[40]	N/A[53]	-	R458632	R458632
23-122920-002[273]	2-7/8 "	R429218X	R429218X[39]	R406532	R4090070[40]	R4111993[302]	R4122386	R458632	R458632
23-122920-002[273]	2-7/8 "	R429218X	R429218X[39]	R406532	R4090070[40]	N/A[53]	-	R4577503	R4577503
23-123572-004[271]	2-7/8 "	R429218X	R429218X[39]	R406532	R4090070[40]	R4111993[302]	R4122386	R458632	R458632
R44141476[268]	2-7/8 "	R429218X	R429218X[39]	R406532	R4090070[40]	N/A[53]	-	R4577503	R4577503
R44141476[268]	2-7/8 "	R429218X	R429218X[39]	R406532	R4090070[40]	N/A[53]	-	R458632	R458632
23-122527-002[272]	2-7/8 "	R429218X	R429218X[39]	R406532	R4090070[40]	R4111993[302]	R4122386	R4577503	R4577503
23-123552-004[266]	2-7/8 "	R429218X	R429218X[39]	R406532	R4090070[40]	N/A[53]	-	R4577503	R4577503
23-122920-002[273]	2-7/8 "	R429218X	R429218X[39]	R406532	R4090070[40]	R4111993[302]	R4122386	R458632	R458632
23-122920-002[273]	2-7/8 "	R429218X	R429218X[39]	R406532	R4090070[40]	N/A[53]	-	R4577503	R4577503
R44141858[275]	2-7/8 "	R429218X	R429218X[39]	R406532	R4090070[40]	N/A[53]	-	R4577503	R4577503
23-123572-004[271]	2-7/8 "	R429218X	R429218X[39]	R406532	R4090070[40]	N/A[53]	-	R458632	R458632
R44141858[275]	2-7/8 "	R429218X	R429218X[39]	R406532	R4090070[40]	R4111993[302]	R4122386	R4577503	R4577503
23-123552-004[266]	2-7/8 "	R429218X	R429218X[39]	R406532	R4090070[40]	R4111993[302]	R4122386	R4577503	R4577503
23-123552-004[266]	2-7/8 "	R429218X	R429218X[39]	R406532	R4090070[40]	N/A[53]	-	R4577503	R4577503
23-123572-004[271]	2-7/8 "	R429218X	R429218X[39]	R406532	R4090070[40]	R4111993[302]	R4122386	R4577503	R4577503
23-122920-002[273]	2-7/8 "	R429218X	R429218X[39]	R406532	R4090070[40]	N/A[53]	-	R458632	R458632
R44141476[268]	2-7/8 "	R429218X	R429218X[39]	R406532	R4090070[40]	R4111993[302]	R4122386	R4577503	R4577503
23-122527-002[272]	2-7/8 "	R429218X	R429218X[39]	R406532	R4090070[40]	N/A[53]	-	R4577503	R4577503
23-123552-004[266]	2-7/8 "	R429218X	R429218X[39]	R406532	R4090070[40]	N/A[53]	-	R458632	R458632
23-123572-004[271]	2-7/8 "	R429218X	R429218X[39]	R406532	R4090070[40]	R4111993[302]	R4122386	R458632	R458632
23-122527-002[272]	2-7/8 "	R429218X	R429218X[39]	R406532	R4090070[40]	R4111993[302]	R4122386	R458632	R458632
R44141476[268]	2-7/8 "	R429218X	R429218X[39]	R406532	R4090070[40]	R4111993[302]	R4122386	R4577503	R4577503
23-122527-002[272]	2-7/8 "	R429218X	R429218X[39]	R406532	R4090070[40]	N/A[53]	-	R4577503	R4577503
R44141476[268]	2-7/8 "	R429218X	R429218X[39]	R406532	R4090070[40]	R4111993[302]	R4122386	R458632	R458632
23-123572-004[271]	2-7/8 "	R429218X	R429218X[39]	R406532	R4090070[40]	N/A[53]	-	R4577503	R4577503
R44141858[275]	2-7/8 "	R429218X	R429218X[39]	R406532	R4090070[40]	R4111993[302]	R4122386	R458632	R458632
R44141858[275]	2-7/8 "	R429218X	R429218X[39]	R406532	R4090070[40]	R4111993[302]	R4122386	R4577503	R4577503
23-123552-004[266]	2-7/8 "	R429218X	R429218X[39]	R406532	R4090070[40]	N/A[53]	-	R458632	R458632
23-122527-002[272]	2-7/8 "	R429218X	R429218X[39]	R406532	R4090070[40]	R4111993[302]	R4122386	R4577503	R4577503
23-123552-004[266]	2-7/8 "	R429218X	R429218X[39]	R406532	R4090070[40]	N/A[53]	-	R458632	R458632
23-123572-004[271]	2-7/8 "	R429218X	R429218X[39]	R406532	R4090070[40]	R4111993[302]	R4122386	R458632	R458632

273 - 5 Stud, U Shape, .780 Dia. Studs

275 - 5 Stud, U Shape, .656 Dia. Studs

302 - Power Brakes, Dual System

MAKE MODEL YEAR AXLE CODE AXLE WEIGHT	AXLE & BRK. TYPE	BRK. MFG.	BRAKE SIZE	FMSI	MERITOR DISC PAD OR BRAKE SHOE	MERITOR GUIDE PIN OR RETURN SPRING KIT	MERITOR CALIPER HWD. KIT OR RETURN SPRING KIT	MERITOR ADJUSTER KIT (LEFT WHEEL)	MERITOR ADJUSTER KIT (RIGHT WHEEL)
ITE(Cont.)									
170, 1700, 1710, 1723, 1724, 1750, 1753, 1754 SERIES CONVENTIONAL CAB, SCHOOL BUS, TILT CAB(Cont.)									
1983									
	Fd	BX		7142 - D225	MD225	R40H5010	R40H5522	NR	NR
	Fd	BX		7142 - D225	MD225	R40H5010	R40H5522	NR	NR
	Fd	BX		7142 - D225	MD225	R40H5010	R40H5522	NR	NR
	Fd	BX		7142 - D225	MD225	R40H5010	R40H5522	NR	NR
	Fd	BX		7142 - D225	MD225	R40H5010	R40H5522	NR	NR
	Fd	BX		7142 - D225	MD225	R40H5010	R40H5522	NR	NR
	Fd	BX		7142 - D225	MD225	R40H5010	R40H5522	NR	NR
	Fd	BX		7142 - D225	MD225	R40H5010	R40H5522	NR	NR
	Fd	BX		7142 - D225	MD225	R40H5010	R40H5522	NR	NR
	Fd	BX		7142 - D225	MD225	R40H5010	R40H5522	NR	NR
	Fd	BX		7142 - D225	MD225	R40H5010	R40H5522	NR	NR
	Fd	BX		7142 - D225	MD225	R40H5010	R40H5522	NR	NR
	Fd	BX		7142 - D225	MD225	R40H5010	R40H5522	NR	NR
	Fd	BX		7142 - D225	MD225	R40H5010	R40H5522	NR	NR
	Fd	BX		7142 - D225	MD225	R40H5010	R40H5522	NR	NR
	Fd	BX		7142 - D225	MD225	R40H5010	R40H5522	NR	NR
	Fd	BX		7142 - D225	MD225	R40H5010	R40H5522	NR	NR
	Fd	BX		7142 - D225	MD225	R40H5010	R40H5522	NR	NR
	Fd	BX		7142 - D225	MD225	R40H5010	R40H5522	NR	NR
	Fd	BX		7142 - D225	MD225	R40H5010	R40H5522	NR	NR
	Fd	BX		7142 - D225	MD225	R40H5010	R40H5522	NR	NR
	Fd	BX		7142 - D225	MD225	R40H5010	R40H5522	NR	NR
	Fd	BX		7142 - D225	MD225	R40H5010	R40H5522	NR	NR
	Fd	BX		7142 - D225	MD225	R40H5010	R40H5522	NR	NR
	Fd	BX		7142 - D225	MD225	R40H5010	R40H5522	NR	NR
	Fd	BX		7142 - D225	MD225	R40H5010	R40H5522	NR	NR
	Fd	BX		7142 - D225	MD225	R40H5010	R40H5522	NR	NR
	Fd	BX		7142 - D225	MD225	R40H5010	R40H5522	NR	NR
	Fd	BX		7142 - D225	MD225	R40H5010	R40H5522	NR	NR
	Fd	BX		7142 - D225	MD225	R40H5010	R40H5522	NR	NR
	Fd	BX		7142 - D225	MD225	R40H5010	R40H5522	NR	NR
	Fd	BX		7142 - D225	MD225	R40H5010	R40H5522	NR	NR
	Fd	BX		7142 - D225	MD225	R40H5010	R40H5522	NR	NR
	Fd	BX		7142 - D225	MD225	R40H5010	R40H5522	NR	NR
	Fd	BX		7142 - D225	MD225	R40H5010	R40H5522	NR	NR
	Fd	BX		7142 - D225	MD225	R40H5010	R40H5522	NR	NR
	Fd	BX		7142 - D225	MD225	R40H5010	R40H5522	NR	NR
	Fd	BX		7142 - D225	MD225	R40H5010	R40H5522	NR	NR
	Fd	BX		7142 - D225	MD225	R40H5010	R40H5522	NR	NR
	Fd	BX		7142 - D225	MD225	R40H5010	R40H5522	NR	NR
	Fd	BX		7142 - D225	MD225	R40H5010	R40H5522	NR	NR
	Fd	BX		7142 - D225	MD225	R40H5010	R40H5522	NR	NR
	Fd	BX		7142 - D225	MD225	R40H5010	R40H5522	NR	NR
	Fd	BX		7142 - D225	MD225	R40H5010	R40H5522	NR	NR
	Fd	BX		7142 - D225	MD225	R40H5010	R40H5522	NR	NR
	Fd	BX		7142 - D225	MD225	R40H5010	R40H5522	NR	NR
	Fd	BX		7142 - D225	MD225	R40H5010	R40H5522	NR	NR
	Fd	BX		7142 - D225	MD225	R40H5010	R40H5522	NR	NR
	Fd	BX		7142 - D225	MD225	R40H5010	R40H5522	NR	NR
	Fd	BX		7142 - D225	MD225	R40H5010	R40H5522	NR	NR
	Fd	BX		7142 - D225	MD225	R40H5010	R40H5522	NR	NR
	Fd	BX		7142 - D225	MD225	R40H5010	R40H5522	NR	NR
	Fd	BX		7142 - D225	MD225	R40H5010	R40H5522	NR	NR
	Fd	BX		7142 - D225	MD225	R40H5010	R40H5522	NR	NR
	Fd	BX		7142 - D225	MD225	R40H5010	R40H5522	NR	NR
	Fd	BX		7142 - D225	MD225	R40H5010	R40H5522	NR	NR
	Fd	BX		7142 - D225	MD225	R40H5010	R40H5522	NR	NR
	Fd	BX		7142 - D225	MD225	R40H5010	R40H5522	NR	NR
	Fd	BX		7142 - D225	MD225	R40H5010	R40H5522	NR	NR
	Fd	BX		7142 - D225	MD225	R40H5010	R40H5522	NR	NR
	Fd	BX		7142 - D225	MD225	R40H5010	R40H5522	NR	NR
	Fd	BX		7142 - D225	MD225	R40H5010	R40H5522	NR	NR
	Fd	BX		7142 - D225	MD225	R40H5010	R40H5522	NR	NR
	Fd	BX		7142 - D225	MD225	R40H5010	R40H5522	NR	NR
	Fd	BX		7142 - D225	MD225	R40H5010	R40H5522	NR	NR
	Fd	BX		7142 - D225	MD225	R40H5010	R40H5522	NR	NR

39 - First design, uses steel pistons.
40 - For chrome plated steel version, use R4090070P
53 - Power Brakes
266 - 10 Stud, Hat Shaped
268 - 5 Stud, Hat Shape
271 - 6 Stud, Hat Shape
272 - 6 Stud, U Shape
273 - 5 Stud, U Shape, .780 Dia. Studs
275 - 5 Stud, U Shape, .656 Dia. Studs

MERITOR DRUM OR ROTOR NO.	CALIPER OR CYLINDER BORE SIZE	MERITOR CALIPER OR WHEEL CYLINDER (LEFT)	MERITOR CALIPER OR WHEEL CYLINDER (RIGHT)	MERITOR CALIPER OR WHEEL CYLINDER REPAIR KIT	MERITOR CALIPER PISTON	MERITOR MASTER CYLINDER	MERITOR MASTER CYLINDER KIT	MERITOR BRAKE HOSE (LEFT)	MERITOR BRAKE HOSE (RIGHT)
									ITE(Cont.)
170, 1700, 1710, 1723, 1724, 1750, 1753, 1754 SERIES CONVENTIONAL CAB, SCHOOL BUS, TILT CAB(Cont.)									
23-122920-002[273]	2-7/8 "	R429218X	R429218X[39]	R406532	R4090070[40]	N/A[53]	-	R4577503	R4577503
R44141858[275]	2-7/8 "	R429218X	R429218X[39]	R406532	R4090070[40]	R4111993[302]	R4122386	R4577503	R4577503
R44141858[275]	2-7/8 "	R429218X	R429218X[39]	R406532	R4090070[40]	R4111993[302]	R4122386	R458632	R458632
R44141476[268]	2-7/8 "	R429218X	R429218X[39]	R406532	R4090070[40]	R4111993[302]	R4122386	R458632	R458632
23-122527-002[272]	2-7/8 "	R429218X	R429218X[39]	R406532	R4090070[40]	N/A[53]	-	R4577503	R4577503
23-122527-002[272]	2-7/8 "	R429218X	R429218X[39]	R406532	R4090070[40]	R4111993[302]	R4122386	R458632	R458632
23-123552-004[266]	2-7/8 "	R429218X	R429218X[39]	R406532	R4090070[40]	R4111993[302]	R4122386	R4577503	R4577503
23-123572-004[271]	2-7/8 "	R429218X	R429218X[39]	R406532	R4090070[40]	N/A[53]	-	R4577503	R4577503
23-122527-002[272]	2-7/8 "	R429218X	R429218X[39]	R406532	R4090070[40]	R4111993[302]	R4122386	R4577503	R4577503
R44141476[268]	2-7/8 "	R429218X	R429218X[39]	R406532	R4090070[40]	N/A[53]	-	R4577503	R4577503
23-122920-002[273]	2-7/8 "	R429218X	R429218X[39]	R406532	R4090070[40]	N/A[53]	-	R4577503	R4577503
R44141476[268]	2-7/8 "	R429218X	R429218X[39]	R406532	R4090070[40]	R4111993[302]	R4122386	R458632	R458632
23-122920-002[273]	2-7/8 "	R429218X	R429218X[39]	R406532	R4090070[40]	R4111993[302]	R4122386	R4577503	R4577503
R44141858[275]	2-7/8 "	R429218X	R429218X[39]	R406532	R4090070[40]	N/A[53]	-	R458632	R458632
23-122527-002[272]	2-7/8 "	R429218X	R429218X[39]	R406532	R4090070[40]	R4111993[302]	R4122386	R458632	R458632
23-122920-002[273]	2-7/8 "	R429218X	R429218X[39]	R406532	R4090070[40]	R4111993[302]	R4122386	R4577503	R4577503
R44141858[275]	2-7/8 "	R429218X	R429218X[39]	R406532	R4090070[40]	N/A[53]	-	R4577503	R4577503
23-122527-002[272]	2-7/8 "	R429218X	R429218X[39]	R406532	R4090070[40]	N/A[53]	-	R458632	R458632
23-122920-002[273]	2-7/8 "	R429218X	R429218X[39]	R406532	R4090070[40]	N/A[53]	-	R458632	R458632
R44141476[268]	2-7/8 "	R429218X	R429218X[39]	R406532	R4090070[40]	N/A[53]	-	R458632	R458632
23-123552-004[266]	2-7/8 "	R429218X	R429218X[39]	R406532	R4090070[40]	N/A[53]	-	R4577503	R4577503
R44141858[275]	2-7/8 "	R429218X	R429218X[39]	R406532	R4090070[40]	R4111993[302]	R4122386	R458632	R458632
23-123572-004[271]	2-7/8 "	R429218X	R429218X[39]	R406532	R4090070[40]	R4111993[302]	R4122386	R458632	R458632
R44141858[275]	2-7/8 "	R429218X	R429218X[39]	R406532	R4090070[40]	R4111993[302]	R4122386	R4577503	R4577503
23-123572-004[271]	2-7/8 "	R429218X	R429218X[39]	R406532	R4090070[40]	N/A[53]	-	R458632	R458632
23-123572-004[271]	2-7/8 "	R429218X	R429218X[39]	R406532	R4090070[40]	N/A[53]	-	R4577503	R4577503
R44141858[275]	2-7/8 "	R429218X	R429218X[39]	R406532	R4090070[40]	N/A[53]	-	R4577503	R4577503
23-123552-004[266]	2-7/8 "	R429218X	R429218X[39]	R406532	R4090070[40]	N/A[53]	-	R458632	R458632
R44141858[275]	2-7/8 "	R429218X	R429218X[39]	R406532	R4090070[40]	R4111993[302]	R4122386	R458632	R458632
R44141858[275]	2-7/8 "	R429218X	R429218X[39]	R406532	R4090070[40]	N/A[53]	-	R4577503	R4577503
23-123572-004[271]	2-7/8 "	R429218X	R429218X[39]	R406532	R4090070[40]	R4111993[302]	R4122386	R4577503	R4577503
23-123552-004[266]	2-7/8 "	R429218X	R429218X[39]	R406532	R4090070[40]	R4111993[302]	R4122386	R4577503	R4577503
23-122527-002[272]	2-7/8 "	R429218X	R429218X[39]	R406532	R4090070[40]	N/A[53]	-	R458632	R458632
23-122920-002[273]	2-7/8 "	R429218X	R429218X[39]	R406532	R4090070[40]	R4111993[302]	R4122386	R4577503	R4577503
R44141476[268]	2-7/8 "	R429218X	R429218X[39]	R406532	R4090070[40]	R4111993[302]	R4122386	R4577503	R4577503
23-122527-002[272]	2-7/8 "	R429218X	R429218X[39]	R406532	R4090070[40]	R4111993[302]	R4122386	R458632	R458632
R44141476[268]	2-7/8 "	R429218X	R429218X[39]	R406532	R4090070[40]	R4111993[302]	R4122386	R458632	R458632
R44141858[275]	2-7/8 "	R429218X	R429218X[39]	R406532	R4090070[40]	R4111993[302]	R4122386	R458632	R458632
23-122920-002[273]	2-7/8 "	R429218X	R429218X[39]	R406532	R4090070[40]	N/A[53]	-	R458632	R458632
23-122527-002[272]	2-7/8 "	R429218X	R429218X[39]	R406532	R4090070[40]	N/A[53]	-	R4577503	R4577503
R44141476[268]	2-7/8 "	R429218X	R429218X[39]	R406532	R4090070[40]	N/A[53]	-	R4577503	R4577503
R44141858[275]	2-7/8 "	R429218X	R429218X[39]	R406532	R4090070[40]	N/A[53]	-	R458632	R458632
23-123552-004[266]	2-7/8 "	R429218X	R429218X[39]	R406532	R4090070[40]	R4111993[302]	R4122386	R458632	R458632
23-123572-004[271]	2-7/8 "	R429218X	R429218X[39]	R406532	R4090070[40]	N/A[53]	-	R458632	R458632
23-123552-004[266]	2-7/8 "	R429218X	R429218X[39]	R406532	R4090070[40]	N/A[53]	-	R4577503	R4577503
R44141476[268]	2-7/8 "	R429218X	R429218X[39]	R406532	R4090070[40]	R4111993[302]	R4122386	R4577503	R4577503
R44141858[275]	2-7/8 "	R429218X	R429218X[39]	R406532	R4090070[40]	N/A[53]	-	R458632	R458632
23-122920-002[273]	2-7/8 "	R429218X	R429218X[39]	R406532	R4090070[40]	N/A[53]	-	R458632	R458632
23-123572-004[271]	2-7/8 "	R429218X	R429218X[39]	R406532	R4090070[40]	R4111993[302]	R4122386	R4577503	R4577503
23-122920-002[273]	2-7/8 "	R429218X	R429218X[39]	R406532	R4090070[40]	N/A[53]	-	R458632	R458632
23-122527-002[272]	2-7/8 "	R429218X	R429218X[39]	R406532	R4090070[40]	R4111993[302]	R4122386	R458632	R458632
23-123572-004[271]	2-7/8 "	R429218X	R429218X[39]	R406532	R4090070[40]	R4111993[302]	R4122386	R4577503	R4577503
23-123552-004[266]	2-7/8 "	R429218X	R429218X[39]	R406532	R4090070[40]	N/A[53]	-	R4577503	R4577503
R44141858[275]	2-7/8 "	R429218X	R429218X[39]	R406532	R4090070[40]	N/A[53]	-	R458632	R458632
23-123572-004[271]	2-7/8 "	R429218X	R429218X[39]	R406532	R4090070[40]	R4111993[302]	R4122386	R4577503	R4577503
23-123552-004[266]	2-7/8 "	R429218X	R429218X[39]	R406532	R4090070[40]	R4111993[302]	R4122386	R458632	R458632
23-123552-004[266]	2-7/8 "	R429218X	R429218X[39]	R406532	R4090070[40]	N/A[53]	-	R4577503	R4577503
R44141858[275]	2-7/8 "	R429218X	R429218X[39]	R406532	R4090070[40]	R4111993[302]	R4122386	R458632	R458632
23-123572-004[271]	2-7/8 "	R429218X	R429218X[39]	R406532	R4090070[40]	R4111993[302]	R4122386	R458632	R458632
23-122527-002[272]	2-7/8 "	R429218X	R429218X[39]	R406532	R4090070[40]	N/A[53]	-	R458632	R458632
23-122920-002[273]	2-7/8 "	R429218X	R429218X[39]	R406532	R4090070[40]	R4111993[302]	R4122386	R458632	R458632
23-122527-002[272]	2-7/8 "	R429218X	R429218X[39]	R406532	R4090070[40]	R4111993[302]	R4122386	R4577503	R4577503
R44141476[268]	2-7/8 "	R429218X	R429218X[39]	R406532	R4090070[40]	N/A[53]	-	R4577503	R4577503

302 - Power Brakes, Dual System

MAKE MODEL YEAR AXLE CODE AXLE WEIGHT	AXLE & BRK. TYPE	BRK. MFG.	BRAKE SIZE	FMSI	MERITOR DISC PAD OR BRAKE SHOE	MERITOR GUIDE PIN OR RETURN SPRING KIT	MERITOR CALIPER HWD. KIT OR RETURN SPRING KIT	MERITOR ADJUSTER KIT (LEFT WHEEL)	MERITOR ADJUSTER KIT (RIGHT WHEEL)
ITE(Cont.)									
170, 1700, 1710, 1723, 1724, 1750, 1753, 1754 SERIES CONVENTIONAL CAB, SCHOOL BUS, TILT CAB(Cont.)									
1983									
	Fd	BX		7142 - D225	MD225	R40H5010	R40H5522	NR	NR
	Fd	BX		7142 - D225	MD225	R40H5010	R40H5522	NR	NR
	Fd	BX		7142 - D225	MD225	R40H5010	R40H5522	NR	NR
	Fd	BX		7142 - D225	MD225	R40H5010	R40H5522	NR	NR
	Fd	BX		7142 - D225	MD225	R40H5010	R40H5522	NR	NR
	Fd	BX		7142 - D225	MD225	R40H5010	R40H5522	NR	NR
	Fd	BX		7142 - D225	MD225	R40H5010	R40H5522	NR	NR
	Fd	BX		7142 - D225	MD225	R40H5010	R40H5522	NR	NR
	Fd	BX		7142 - D225	MD225	R40H5010	R40H5522	NR	NR
	Fd	BX		7142 - D225	MD225	R40H5010	R40H5522	NR	NR
	Fd	BX		7142 - D225	MD225	R40H5010	R40H5522	NR	NR
	Fd	BX		7142 - D225	MD225	R40H5010	R40H5522	NR	NR
	Fd	BX		7142 - D225	MD225	R40H5010	R40H5522	NR	NR
	Fd	BX		7142 - D225	MD225	R40H5010	R40H5522	NR	NR
	Fd	BX		7142 - D225	MD225	R40H5010	R40H5522	NR	NR
	Fd	BX		7142 - D225	MD225	R40H5010	R40H5522	NR	NR
	Fd	BX		7142 - D225	MD225	R40H5010	R40H5522	NR	NR
	Fd	BX		7142 - D225	MD225	R40H5010	R40H5522	NR	NR
	Fd	BX		7142 - D225	MD225	R40H5010	R40H5522	NR	NR
	Fd	BX		7142 - D225	MD225	R40H5010	R40H5522	NR	NR
	Fd	BX		7142 - D225	MD225	R40H5010	R40H5522	NR	NR
	Fd	BX		7142 - D225	MD225	R40H5010	R40H5522	NR	NR
	Fd	BX		7142 - D225	MD225	R40H5010	R40H5522	NR	NR
	Fd	BX		7142 - D225	MD225	R40H5010	R40H5522	NR	NR
	Fd	BX		7142 - D225	MD225	R40H5010	R40H5522	NR	NR
	Fd	BX		7142 - D225	MD225	R40H5010	R40H5522	NR	NR
	Fd	BX		7142 - D225	MD225	R40H5010	R40H5522	NR	NR
	Fd	BX		7142 - D225	MD225	R40H5010	R40H5522	NR	NR
	Fd	BX		7142 - D225	MD225	R40H5010	R40H5522	NR	NR
	Fd	BX		7142 - D225	MD225	R40H5010	R40H5522	NR	NR
	Fd	BX		7142 - D225	MD225	R40H5010	R40H5522	NR	NR
	Fd	BX		7142 - D225	MD225	R40H5010	R40H5522	NR	NR
	Fd	BX		7142 - D225	MD225	R40H5010	R40H5522	NR	NR
	Fd	BX		7142 - D225	MD225	R40H5010	R40H5522	NR	NR
S1723, S1753 School Bus FA73									
	Fd	BX		7108 - D184	MD184	R40H5010	R40H5519	NR	NR
	Fd	BX		7108 - D184	MD184	R40H5010	R40H5519	NR	NR
	Fd	BX		7108 - D184	MD184	R40H5010	R40H5519	NR	NR
	Fd	BX		7108 - D184	MD184	R40H5010	R40H5519	NR	NR
	Fd	BX		7108 - D184	MD184	R40H5010	R40H5519	NR	NR
	Fd	BX		7108 - D184	MD184	R40H5010	R40H5519	NR	NR
	Fd	BX		7108 - D184	MD184	R40H5010	R40H5519	NR	NR
	Fd	BX		7108 - D184	MD184	R40H5010	R40H5519	NR	NR
S1723, S1753 School Bus RA29, 30, 42, 44									
	Rd	BX		7142 - D225	MD225	R40H5010	R40H5522	NR	NR
	Rd	BX		7142 - D225	MD225	R40H5010	R40H5522	NR	NR
	Rd	BX		7142 - D225	MD225	R40H5010	R40H5522	NR	NR
	Rd	BX		7108 - D184	MD184	R40H5010	R40H5519	NR	NR
	Rd	BX		7108 - D184	MD184	R40H5010	R40H5519	NR	NR
	Rd	BX		7142 - D225	MD225	R40H5010	R40H5522	NR	NR
	Rd	BX		7142 - D225	MD225	R40H5010	R40H5522	NR	NR
	Rd	BX		7142 - D225	MD225	R40H5010	R40H5522	NR	NR
	Rd	BX		7108 - D184	MD184	R40H5010	R40H5519	NR	NR
	Rd	BX		7142 - D225	MD225	R40H5010	R40H5522	NR	NR
	Rd	BX		7142 - D225	MD225	R40H5010	R40H5522	NR	NR
	Rd	BX		7142 - D225	MD225	R40H5010	R40H5522	NR	NR
	Rd	BX		7108 - D184	MD184	R40H5010	R40H5519	NR	NR
	Rd	BX		7142 - D225	MD225	R40H5010	R40H5522	NR	NR
	Rd	BX		7108 - D184	MD184	R40H5010	R40H5519	NR	NR
	Rd	BX		7142 - D225	MD225	R40H5010	R40H5522	NR	NR
	Rd	BX		7142 - D225	MD225	R40H5010	R40H5522	NR	NR
	Rd	BX		7142 - D225	MD225	R40H5010	R40H5522	NR	NR
	Rd	BX		7142 - D225	MD225	R40H5010	R40H5522	NR	NR
	Rd	BX		7108 - D184	MD184	R40H5010	R40H5519	NR	NR

37 - Also available as a New unit

38 - First design, may have external joining tube and uses steel pistons

39 - First design, uses steel pistons.

40 - For chrome plated steel version, use R4090070P

52 - 18" Length

53 - Power Brakes

201 - Steel Piston

266 - 10 Stud, Hat Shaped

267 - 10 Stud, U Shaped

MERITOR DRUM OR ROTOR NO.	CALIPER OR CYLINDER BORE SIZE	MERITOR CALIPER OR WHEEL CYLINDER (LEFT)	MERITOR CALIPER OR WHEEL CYLINDER (RIGHT)	MERITOR CALIPER OR WHEEL CYLINDER REPAIR KIT	MERITOR CALIPER PISTON	MERITOR MASTER CYLINDER	MERITOR MASTER CYLINDER KIT	MERITOR BRAKE HOSE (LEFT)	MERITOR BRAKE HOSE (RIGHT)
									ITE(Cont.)
170, 1700, 1710, 1723, 1724, 1750, 1753, 1754 SERIES CONVENTIONAL CAB, SCHOOL BUS, TILT CAB(Cont.)									
23-123572-004[271]	2-7/8 "	R429218X	R429218X[39]	R406532	R4090070[40]	R4111993[302]	R4122386	R458632	R458632
23-123572-004[271]	2-7/8 "	R429218X	R429218X[39]	R406532	R4090070[40]	N/A[53]	-	R458632	R458632
23-122920-002[273]	2-7/8 "	R429218X	R429218X[39]	R406532	R4090070[40]	R4111993[302]	R4122386	R4577503	R4577503
23-122920-002[273]	2-7/8 "	R429218X	R429218X[39]	R406532	R4090070[40]	N/A[53]	-	R4577503	R4577503
R44141476[268]	2-7/8 "	R429218X	R429218X[39]	R406532	R4090070[40]	R4111993[302]	R4122386	R4577503	R4577503
23-123552-004[266]	2-7/8 "	R429218X	R429218X[39]	R406532	R4090070[40]	R4111993[302]	R4122386	R458632	R458632
23-122527-002[272]	2-7/8 "	R429218X	R429218X[39]	R406532	R4090070[40]	N/A[53]	-	R458632	R458632
23-123552-004[266]	2-7/8 "	R429218X	R429218X[39]	R406532	R4090070[40]	R4111993[302]	R4122386	R4577503	R4577503
R44141476[268]	2-7/8 "	R429218X	R429218X[39]	R406532	R4090070[40]	N/A[53]	-	R458632	R458632
R44141858[275]	2-7/8 "	R429218X	R429218X[39]	R406532	R4090070[40]	R4111993[302]	R4122386	R4577503	R4577503
23-123572-004[271]	2-7/8 "	R429218X	R429218X[39]	R406532	R4090070[40]	N/A[53]	-	R4577503	R4577503
23-122920-002[273]	2-7/8 "	R429218X	R429218X[39]	R406532	R4090070[40]	R4111993[302]	R4122386	R458632	R458632
R44141476[268]	2-7/8 "	R429218X	R429218X[39]	R406532	R4090070[40]	N/A[53]	-	R458632	R458632
23-122920-002[273]	2-7/8 "	R429218X	R429218X[39]	R406532	R4090070[40]	R4111993[302]	R4122386	R4577503	R4577503
R44141476[268]	2-7/8 "	R429218X	R429218X[39]	R406532	R4090070[40]	N/A[53]	-	R4577503	R4577503
R44141858[275]	2-7/8 "	R429218X	R429218X[39]	R406532	R4090070[40]	N/A[53]	-	R4577503	R4577503
23-123572-004[271]	2-7/8 "	R429218X	R429218X[39]	R406532	R4090070[40]	N/A[53]	-	R4577503	R4577503
23-122920-002[273]	2-7/8 "	R429218X	R429218X[39]	R406532	R4090070[40]	R4111993[302]	R4122386	R458632	R458632
R44141858[275]	2-7/8 "	R429218X	R429218X[39]	R406532	R4090070[40]	N/A[53]	-	R458632	R458632
R44141858[275]	2-7/8 "	R429218X	R429218X[39]	R406532	R4090070[40]	N/A[53]	-	R4577503	R4577503
23-123572-004[271]	2-7/8 "	R429218X	R429218X[39]	R406532	R4090070[40]	R4111993[302]	R4122386	R4577503	R4577503
23-123552-004[266]	2-7/8 "	R429218X	R429218X[39]	R406532	R4090070[40]	R4111993[302]	R4122386	R458632	R458632
23-122527-002[272]	2-7/8 "	R429218X	R429218X[39]	R406532	R4090070[40]	N/A[53]	-	R4577503	R4577503
R44141476[268]	2-7/8 "	R429218X	R429218X[39]	R406532	R4090070[40]	R4111993[302]	R4122386	R4577503	R4577503
23-122527-002[272]	2-7/8 "	R429218X	R429218X[39]	R406532	R4090070[40]	N/A[53]	-	R4577503	R4577503
R44141858[275]	2-7/8 "	R429218X	R429218X[39]	R406532	R4090070[40]	N/A[53]	-	R458632	R458632
23-123552-004[266]	2-7/8 "	R429218X	R429218X[39]	R406532	R4090070[40]	R4111993[302]	R4122386	R458632	R458632
23-122527-002[272]	2-7/8 "	R429218X	R429218X[39]	R406532	R4090070[40]	N/A[53]	-	R458632	R458632
23-123552-004[266]	2-7/8 "	R429218X	R429218X[39]	R406532	R4090070[40]	N/A[53]	-	R458632	R458632
23-123572-004[271]	2-7/8 "	R429218X	R429218X[39]	R406532	R4090070[40]	N/A[53]	-	R458632	R458632
23-123572-004[271]	2-7/8 "	R429218X	R429218X[39]	R406532	R4090070[40]	N/A[53]	-	R4577503	R4577503
23-123552-004[266]	2-7/8 "	R429218X	R429218X[39]	R406532	R4090070[40]	R4111993[302]	R4122386	R4577503	R4577503
23-123552-004[266]	2-7/8 "	R429218X	R429218X[39]	R406532	R4090070[40]	R4111993[302]	R4122386	R458632	R458632
23-122527-002[272]	3-3/8 "	R42R55099	R42R55098[37]	R4066780	R4090021[201]	R4111993[302]	R4122386	R4577503	R4577503
23-122527-002[272]	3-3/8 "	R42R55099	R42R55098[37]	R4066780	R4090021[201]	R4111993[302]	R4122386	R4577503	R4577503
23-122527-002[272]	3-3/8 "	R42R55099	R42R55098[37]	R4066780	R4090021[201]	R4111993[302]	R4122386	R458632	R458632
23-122527-002[272]	3-3/8 "	R42R55099	R42R55098[37]	R4066780	R4090021[201]	N/A[53]	-	R458632	R458632
23-122527-002[272]	3-3/8 "	R42R55099	R42R55098[37]	R4066780	R4090021[201]	N/A[53]	-	R4577503	R4577503
23-122527-002[272]	3-3/8 "	R42R55099	R42R55098[37]	R4066780	R4090021[201]	R4111993[302]	R4122386	R458632	R458632
23-122527-002[272]	3-3/8 "	R42R55099	R42R55098[37]	R4066780	R4090021[201]	N/A[53]	-	R4577503	R4577503
23-122527-002[272]	3-3/8 "	R42R55099	R42R55098[37]	R4066780	R4090021[201]	N/A[53]	-	R458632	R458632
23-122527-002[272]	2-7/8 "	R429218X	R429218X[39]	R406532	R4090070[40]	-	-	R458634[52]	R458634
R44141629[269]	2-7/8 "	R429218X	R429218X[39]	R406532	R4090070[40]	-	-	R458634[52]	R458634
R44141629[269]	2-7/8 "	R429218X	R429218X[39]	R406532	R4090070[40]	-	-	R458634[52]	R458634
23-123572-004[271]	2-19/32 "	R42R55245	R42R55245[38]	R402235118	R402238231[201]	-	-	R458634[52]	R458634
R44141628[269]	2-19/32 "	R42R55245	R42R55245[38]	R402235118	R402238231[201]	-	-	R458634[52]	R458634
23-123572-004[271]	2-7/8 "	R429218X	R429218X[39]	R406532	R4090070[40]	-	-	R458634[52]	R458634
R44141629[269]	2-7/8 "	R429218X	R429218X[39]	R406532	R4090070[40]	-	-	R458634[52]	R458634
R44141628[269]	2-7/8 "	R429218X	R429218X[39]	R406532	R4090070[40]	-	-	R458634[52]	R458634
R44141627[270]	2-19/32 "	R42R55245	R42R55245[38]	R402235118	R402238231[201]	-	-	R458634[52]	R458634
R44141608[267]	2-7/8 "	R429218X	R429218X[39]	R406532	R4090070[40]	-	-	R458634[52]	R458634
R44141608[267]	2-7/8 "	R429218X	R429218X[39]	R406532	R4090070[40]	-	-	R458634[52]	R458634
R44141628[269]	2-7/8 "	R429218X	R429218X[39]	R406532	R4090070[40]	-	-	R458634[52]	R458634
R44141629[269]	2-19/32 "	R42R55245	R42R55245[38]	R402235118	R402238231[201]	-	-	R458634[52]	R458634
23-122527-002[272]	2-7/8 "	R429218X	R429218X[39]	R406532	R4090070[40]	-	-	R458634[52]	R458634
23-123552-004[266]	2-19/32 "	R42R55245	R42R55245[38]	R402235118	R402238231[201]	-	-	R458634[52]	R458634
R44141628[269]	2-7/8 "	R429218X	R429218X[39]	R406532	R4090070[40]	-	-	R458634[52]	R458634
R44141608[267]	2-7/8 "	R429218X	R429218X[39]	R406532	R4090070[40]	-	-	R458634[52]	R458634
23-123572-004[271]	2-7/8 "	R429218X	R429218X[39]	R406532	R4090070[40]	-	-	R458634[52]	R458634
R44141627[270]	2-7/8 "	R429218X	R429218X[39]	R406532	R4090070[40]	-	-	R458634[52]	R458634
R44141628[269]	2-19/32 "	R42R55245	R42R55245[38]	R402235118	R402238231[201]	-	-	R458634[52]	R458634

268 - 5 Stud, Hat Shape

269 - 5 Stud, U Shape

270 - 5 Stud, U Shape, .766 Dia. Studs

271 - 6 Stud, Hat Shape

272 - 6 Stud, U Shape

273 - 5 Stud, U Shape, .780 Dia. Studs

275 - 5 Stud, U Shape, .656 Dia. Studs

302 - Power Brakes, Dual System

MAKE MODEL YEAR AXLE CODE AXLE WEIGHT	AXLE & BRK. TYPE	BRK. MFG.	BRAKE SIZE	FMSI	MERITOR DISC PAD OR BRAKE SHOE	MERITOR GUIDE PIN OR RETURN SPRING KIT	MERITOR CALIPER HWD. KIT OR RETURN SPRING KIT	MERITOR ADJUSTER KIT (LEFT WHEEL)	MERITOR ADJUSTER KIT (RIGHT WHEEL)
ITE(Cont.)									
170, 1700, 1710, 1723, 1724, 1750, 1753, 1754 SERIES CONVENTIONAL CAB, SCHOOL BUS, TILT CAB(Cont.)									
1983									
	Rd	BX		7142 - D225	MD225	R40H5010	R40H5522	NR	NR
	Rd	BX		7142 - D225	MD225	R40H5010	R40H5522	NR	NR
	Rd	BX		7108 - D184	MD184	R40H5010	R40H5519	NR	NR
	Rd	BX		7142 - D225	MD225	R40H5010	R40H5522	NR	NR
	Rd	BX		7108 - D184	MD184	R40H5010	R40H5519	NR	NR
	Rd	BX		7108 - D184	MD184	R40H5010	R40H5519	NR	NR
	Rd	BX		7142 - D225	MD225	R40H5010	R40H5522	NR	NR
	Rd	BX		7142 - D225	MD225	R40H5010	R40H5522	NR	NR
	Rd	BX		7142 - D225	MD225	R40H5010	R40H5522	NR	NR
	Rd	BX		7108 - D184	MD184	R40H5010	R40H5519	NR	NR
	Rd	BX		7108 - D184	MD184	R40H5010	R40H5519	NR	NR
	Rd	BX		7108 - D184	MD184	R40H5010	R40H5519	NR	NR
	Rd	BX		7142 - D225	MD225	R40H5010	R40H5522	NR	NR
	Rd	BX		7142 - D225	MD225	R40H5010	R40H5522	NR	NR
	Rd	BX		7108 - D184	MD184	R40H5010	R40H5519	NR	NR
	Rd	BX		7108 - D184	MD184	R40H5010	R40H5519	NR	NR
	Rd	BX		7142 - D225	MD225	R40H5010	R40H5522	NR	NR
	Rd	BX		7142 - D225	MD225	R40H5010	R40H5522	NR	NR
	Rd	BX		7142 - D225	MD225	R40H5010	R40H5522	NR	NR
	Rd	BX		7142 - D225	MD225	R40H5010	R40H5522	NR	NR
	Rd	BX		7142 - D225	MD225	R40H5010	R40H5522	NR	NR
	Rd	BX		7108 - D184	MD184	R40H5010	R40H5519	NR	NR
	Rd	BX		7142 - D225	MD225	R40H5010	R40H5522	NR	NR
	Rd	BX		7142 - D225	MD225	R40H5010	R40H5522	NR	NR
	Rd	BX		7142 - D225	MD225	R40H5010	R40H5522	NR	NR
	Rd	BX		7108 - D184	MD184	R40H5010	R40H5519	NR	NR
	Rd	BX		7108 - D184	MD184	R40H5010	R40H5519	NR	NR
	Rd	BX		7142 - D225	MD225	R40H5010	R40H5522	NR	NR
	Rd	BX		7142 - D225	MD225	R40H5010	R40H5522	NR	NR
	Rd	BX		7142 - D225	MD225	R40H5010	R40H5522	NR	NR
	Rd	BX		7142 - D225	MD225	R40H5010	R40H5522	NR	NR
	Rd	BX		7108 - D184	MD184	R40H5010	R40H5519	NR	NR
	Rd	BX		7108 - D184	MD184	R40H5010	R40H5519	NR	NR
	Rd	BX		7142 - D225	MD225	R40H5010	R40H5522	NR	NR
	Rd	BX		7142 - D225	MD225	R40H5010	R40H5522	NR	NR
	Rd	BX		7142 - D225	MD225	R40H5010	R40H5522	NR	NR
	Rd	BX		7142 - D225	MD225	R40H5010	R40H5522	NR	NR
	Rd	BX		7108 - D184	MD184	R40H5010	R40H5519	NR	NR
	Rd	BX		7108 - D184	MD184	R40H5010	R40H5519	NR	NR
	Rd	BX		7142 - D225	MD225	R40H5010	R40H5522	NR	NR
	Rd	BX		7142 - D225	MD225	R40H5010	R40H5522	NR	NR
	Rd	BX		7108 - D184	MD184	R40H5010	R40H5519	NR	NR
	Rd	BX		7108 - D184	MD184	R40H5010	R40H5519	NR	NR
	Rd	BX		7108 - D184	MD184	R40H5010	R40H5519	NR	NR
	Rd	BX		7142 - D225	MD225	R40H5010	R40H5522	NR	NR
	Rd	BX		7142 - D225	MD225	R40H5010	R40H5522	NR	NR
	Rd	BX		7108 - D184	MD184	R40H5010	R40H5519	NR	NR
	Rd	BX		7142 - D225	MD225	R40H5010	R40H5522	NR	NR
	Rd	BX		7142 - D225	MD225	R40H5010	R40H5522	NR	NR
	Rd	BX		7108 - D184	MD184	R40H5010	R40H5519	NR	NR
	Rd	BX		7142 - D225	MD225	R40H5010	R40H5522	NR	NR
S1724, S1754 Conventional FA109, 208	Fa	WG	15 " x 3 "	1245C - 321	R700321	R40H521	R40H9237	R40H3502	R40H3503
	Fm	WG	15 " x 3 "	1245A - 235	R700235	R40H521	R40H9201	R40H3524	R40H3524
S1724, S1754 Conventional FA208	Fa	WG	15 " x 3-1/2 "	1280B - 322	R464004	R40H521	R40H9237	R40H3502	R40H3503
	Fm	WG	15 " x 3-1/2 "	1280 - 463	R700463	R40H521	R40H9201	R40H3524	R40H3524
S1724, S1754 Conventional FA309, 329, 339	Fd	BX		7142 - D225	MD225	R40H5010	R40H5522	NR	NR
	Fd	BX		7142 - D225	MD225	R40H5010	R40H5522	NR	NR
	Fd	BX		7142 - D225	MD225	R40H5010	R40H5522	NR	NR
	Fd	BX		7142 - D225	MD225	R40H5010	R40H5522	NR	NR
S1724, S1754 Conventional FA48, 68, 70, 72	Fa	WG	14 " x 2-1/2 "	1294A - 325	N/A	R40H521	R40H9237	R40H3502	R40H3503
	Fm	WG	14 " x 2-1/2 "	1294 - 296	N/A	R40H521	R40H9201	R40H3524	R40H3524
S1724, S1754 Conventional FA71, 73, 101	Fa	WG	15 " x 3 "	1245C - 321	R700321	R40H521	R40H9237	R40H3502	R40H3503

38 - First design, may have external joining tube and uses steel pistons
39 - First design, uses steel pistons.
40 - For chrome plated steel version, use R4090070P
52 - 18" Length
201 - Steel Piston
266 - 10 Stud, Hat Shaped
267 - 10 Stud, U Shaped
269 - 5 Stud, U Shape
270 - 5 Stud, U Shape, .766 Dia. Studs

MERITOR DRUM OR ROTOR NO.	CALIPER OR CYLINDER BORE SIZE	MERITOR CALIPER OR WHEEL CYLINDER (LEFT)	MERITOR CALIPER OR WHEEL CYLINDER (RIGHT)	MERITOR CALIPER OR WHEEL CYLINDER REPAIR KIT	MERITOR CALIPER PISTON	MERITOR MASTER CYLINDER	MERITOR MASTER CYLINDER KIT	MERITOR BRAKE HOSE (LEFT)	MERITOR BRAKE HOSE (RIGHT)
									ITE(Cont.)
170, 1700, 1710, 1723, 1724, 1750, 1753, 1754 SERIES CONVENTIONAL CAB, SCHOOL BUS, TILT CAB(Cont.)									
23-123572-004[271]	2-7/8 "	R429218X	R429218X[39]	R406532	R4090070[40]	-	-	R458634[52]	R458634
R44141627[270]	2-7/8 "	R429218X	R429218X[39]	R406532	R4090070[40]	-	-	R458634[52]	R458634
R44141628[269]	2-19/32 "	R42R55245	R42R55245[38]	R402235118	R402238231[201]	-	-	R458634[52]	R458634
R44141608[267]	2-7/8 "	R429218X	R429218X[39]	R406532	R4090070[40]	-	-	R458634[52]	R458634
23-123572-004[271]	2-19/32 "	R42R55245	R42R55245[38]	R402235118	R402238231[201]	-	-	R458634[52]	R458634
23-123572-004[271]	2-19/32 "	R42R55245	R42R55245[38]	R402235118	R402238231[201]	-	-	R458634[52]	R458634
R44141608[267]	2-7/8 "	R429218X	R429218X[39]	R406532	R4090070[40]	-	-	R458634[52]	R458634
23-122527-002[272]	2-7/8 "	R429218X	R429218X[39]	R406532	R4090070[40]	-	-	R458634[52]	R458634
23-122527-002[272]	2-7/8 "	R429218X	R429218X[39]	R406532	R4090070[40]	-	-	R458634[52]	R458634
23-123552-004[266]	2-19/32 "	R42R55245	R42R55245[38]	R402235118	R402238231[201]	-	-	R458634[52]	R458634
R44141627[270]	2-19/32 "	R42R55245	R42R55245[38]	R402235118	R402238231[201]	-	-	R458634[52]	R458634
R44141628[269]	2-19/32 "	R42R55245	R42R55245[38]	R402235118	R402238231[201]	-	-	R458634[52]	R458634
R44141627[270]	2-7/8 "	R429218X	R429218X[39]	R406532	R4090070[40]	-	-	R458634[52]	R458634
R44141629[269]	2-7/8 "	R429218X	R429218X[39]	R406532	R4090070[40]	-	-	R458634[52]	R458634
R44141608[267]	2-19/32 "	R42R55245	R42R55245[38]	R402235118	R402238231[201]	-	-	R458634[52]	R458634
23-123572-004[271]	2-19/32 "	R42R55245	R42R55245[38]	R402235118	R402238231[201]	-	-	R458634[52]	R458634
23-122527-002[272]	2-7/8 "	R429218X	R429218X[39]	R406532	R4090070[40]	-	-	R458634[52]	R458634
23-123572-004[271]	2-7/8 "	R429218X	R429218X[39]	R406532	R4090070[40]	-	-	R458634[52]	R458634
R44141629[269]	2-7/8 "	R429218X	R429218X[39]	R406532	R4090070[40]	-	-	R458634[52]	R458634
23-122527-002[272]	2-7/8 "	R429218X	R429218X[39]	R406532	R4090070[40]	-	-	R458634[52]	R458634
R44141629[269]	2-7/8 "	R429218X	R429218X[39]	R406532	R4090070[40]	-	-	R458634[52]	R458634
23-122527-002[272]	2-19/32 "	R42R55245	R42R55245[38]	R402235118	R402238231[201]	-	-	R458634[52]	R458634
R44141627[270]	2-7/8 "	R429218X	R429218X[39]	R406532	R4090070[40]	-	-	R458634[52]	R458634
23-123552-004[266]	2-7/8 "	R429218X	R429218X[39]	R406532	R4090070[40]	-	-	R458634[52]	R458634
23-123572-004[271]	2-7/8 "	R429218X	R429218X[39]	R406532	R4090070[40]	-	-	R458634[52]	R458634
23-123552-004[266]	2-19/32 "	R42R55245	R42R55245[38]	R402235118	R402238231[201]	-	-	R458634[52]	R458634
R44141608[267]	2-19/32 "	R42R55245	R42R55245[38]	R402235118	R402238231[201]	-	-	R458634[52]	R458634
23-123552-004[266]	2-7/8 "	R429218X	R429218X[39]	R406532	R4090070[40]	-	-	R458634[52]	R458634
R44141608[267]	2-7/8 "	R429218X	R429218X[39]	R406532	R4090070[40]	-	-	R458634[52]	R458634
R44141628[269]	2-7/8 "	R429218X	R429218X[39]	R406532	R4090070[40]	-	-	R458634[52]	R458634
23-123552-004[266]	2-19/32 "	R42R55245	R42R55245[38]	R402235118	R402238231[201]	-	-	R458634[52]	R458634
R44141629[269]	2-19/32 "	R42R55245	R42R55245[38]	R402235118	R402238231[201]	-	-	R458634[52]	R458634
R44141628[269]	2-7/8 "	R429218X	R429218X[39]	R406532	R4090070[40]	-	-	R458634[52]	R458634
23-123552-004[266]	2-7/8 "	R429218X	R429218X[39]	R406532	R4090070[40]	-	-	R458634[52]	R458634
R44141627[270]	2-7/8 "	R429218X	R429218X[39]	R406532	R4090070[40]	-	-	R458634[52]	R458634
R44141628[269]	2-7/8 "	R429218X	R429218X[39]	R406532	R4090070[40]	-	-	R458634[52]	R458634
R44141629[269]	2-19/32 "	R42R55245	R42R55245[38]	R402235118	R402238231[201]	-	-	R458634[52]	R458634
R44141608[267]	2-19/32 "	R42R55245	R42R55245[38]	R402235118	R402238231[201]	-	-	R458634[52]	R458634
R44141629[269]	2-19/32 "	R42R55245	R42R55245[38]	R402235118	R402238231[201]	-	-	R458634[52]	R458634
23-123572-004[271]	2-7/8 "	R429218X	R429218X[39]	R406532	R4090070[40]	-	-	R458634[52]	R458634
23-123552-004[266]	2-7/8 "	R429218X	R429218X[39]	R406532	R4090070[40]	-	-	R458634[52]	R458634
23-122527-002[272]	2-19/32 "	R42R55245	R42R55245[38]	R402235118	R402238231[201]	-	-	R458634[52]	R458634
23-123552-004[266]	2-7/8 "	R429218X	R429218X[39]	R406532	R4090070[40]	-	-	R458634[52]	R458634
R44141627[270]	2-7/8 "	R429218X	R429218X[39]	R406532	R4090070[40]	-	-	R458634[52]	R458634
R44141608[267]	2-19/32 "	R42R55245	R42R55245[38]	R402235118	R402238231[201]	-	-	R458634[52]	R458634
23-123552-004[266]	2-7/8 "	R429218X	R429218X[39]	R406532	R4090070[40]	-	-	R458634[52]	R458634
N/A	1-1/4 "	R4133581	R4133582	R4166923	NR	-	-	-	-
N/A	1-1/4 "	R4133581	R4133582	R4166923	NR	-	-	-	-
N/A	1-1/4 "	R4133581	R4133582	R4166923	NR	-	-	-	-
N/A	1-1/4 "	R4133581	R4133582	R4166923	NR	-	-	-	-
23-122701-002[269]	2-7/8 "	R429218X	R429218X[39]	R406532	R4090070[40]	R4111993[302]	R4122386	R4577503	R4577503
23-122701-002[269]	2-7/8 "	R429218X	R429218X[39]	R406532	R4090070[40]	R4111993[302]	R4122386	R458632	R458632
23-122701-002[269]	2-7/8 "	R429218X	R429218X[39]	R406532	R4090070[40]	R4111294[332]	R4122346	R4577503	R4577503
23-122701-002[269]	2-7/8 "	R429218X	R429218X[39]	R406532	R4090070[40]	R4111294[332]	R4122346	R458632	R458632
N/A	1-1/8 "	R4133714	R4133715	R4166926	NR	-	-	-	-
N/A	1-1/8 "	R4133714	R4133715	R4166926	NR	-	-	-	-
N/A	1-1/4 "	R4133581	R4133582	R4166923	NR	-	-	-	-

271 - 6 Stud, Hat Shape

272 - 6 Stud, U Shape

302 - Power Brakes, Dual System

332 - Power Brakes, Hydraulic Booster

MAKE MODEL YEAR AXLE CODE AXLE WEIGHT	AXLE & BRK. TYPE	BRK. MFG.	BRAKE SIZE	FMSI	MERITOR DISC PAD OR BRAKE SHOE	MERITOR GUIDE PIN OR RETURN SPRING KIT	MERITOR CALIPER HWD. KIT OR RETURN SPRING KIT	MERITOR ADJUSTER KIT (LEFT WHEEL)	MERITOR ADJUSTER KIT (RIGHT WHEEL)
ITE(Cont.)									
170, 1700, 1710, 1723, 1724, 1750, 1753, 1754 SERIES CONVENTIONAL CAB, SCHOOL BUS, TILT CAB(Cont.)									
1983									
	Fa	WG	15 " x 3-1/2 "	1280B - 322	R464004	R40H521	R40H9237	R40H3502	R40H3503
	Fm	WG	15 " x 3 "	1245A - 235	R700235	R40H521	R40H9201	R40H3524	R40H3524
	Fm	WG	15 " x 3-1/2 "	1280 - 463	R700463	R40H521	R40H9201	R40H3524	R40H3524
S1724, S1754 Conventional FA73, 101	Fd	BX		7108 - D184	MD184	R40H5010	R40H5519	NR	NR
	Fd	BX		7108 - D184	MD184	R40H5010	R40H5519	NR	NR
	Fd	BX		7108 - D184	MD184	R40H5010	R40H5519	NR	NR
	Fd	BX		7108 - D184	MD184	R40H5010	R40H5519	NR	NR
S1724, S1754 Conventional FA73, 101, 104	Fd	BX		7108 - D184	MD184	R40H5010	R40H5519	NR	NR
	Fd	BX		7108 - D184	MD184	R40H5010	R40H5519	NR	NR
	Fd	BX		7108 - D184	MD184	R40H5010	R40H5519	NR	NR
	Fd	BX		7108 - D184	MD184	R40H5010	R40H5519	NR	NR
S1724, S1754 Conventional FA74	Fa	WG	15 " x 3 "	1245C - 321	R700321	R40H521	R40H9237	R40H3502	R40H3503
	Fm	WG	15 " x 3 "	1245A - 235	R700235	R40H521	R40H9201	R40H3524	R40H3524
S1724, S1754 Conventional FA78, 81	Fa	WG	15 " x 3 "	1245C - 321	R700321	R40H521	R40H9237	R40H3502	R40H3503
S1724, S1754 Conventional FA89, 91, 98	Fa	WG	15 " x 3 "	1245C - 321	R700321	R40H521	R40H9237	R40H3502	R40H3503
	Fm	WG	15 " x 3 "	1245A - 235	R700235	R40H521	R40H9201	R40H3524	R40H3524
S1724, S1754 Conventional RA184	Ra	WG	15 " x 4 "	4645A - 376	Discontinued	R40H597	R40H9200	R40H3540	R40H3541
	Rm	WG	15 " x 4 "	4645A - 376	Discontinued	R40H597	R40H9200	R40H3518	R404148
S1724, S1754 Conventional RA25, 184	Ra	WG	15 " x 5 "	1252 - 346	R700346	R40H597	R40H9200	R40H3540	R40H3541
	Rm	WG	15 " x 5 "	1252 - 346	R700346	R40H597	R40H9200	R40H3518	R404148
S1724, S1754 Conventional RA29, 30, 187	Ra	WG	15 " x 5 "	1252 - 346	R700346	R40H597	R40H9200	R40H3540	R40H3541
	Rm	WG	15 " x 5 "	1252 - 346	R700346	R40H597	R40H9200	R40H3518	R404148
S1724, S1754 Conventional RA29, 30, 39, 42, 187, 189, 199	Rd	BX		7108 - D184	MD184	R40H5010	R40H5519	NR	NR
S1724, S1754 Conventional RA30, 187	Ra	WG	16 " x 5 "	1254 - 385	N/A	R40H597	R40H9200	N/A	N/A
	Rm	WG	16 " x 5 "	1254 - 385	N/A	R40H597	R40H9200	R404149	R404150
S1724, S1754 Conventional RA30, 39, 44, 186, 189	Ra	WG	15 " x 6 "	4596 - 381	R700381	R40H597	R40H9200	R40H3540	R40H3541
	Rm	WG	15 " x 6 "	4596 - 381	R700381	R40H597	R40H9200	R40H3518	R404148
S1724, S1754 Conventional RA39, 199	Ra	WG	15 " x 7 "	4597 - 383	R700383	R40H597	R40H9200	R40H3540	R40H3541
	Rm	WG	15 " x 7 "	4597 - 383	R700383	R40H597	R40H9200	R40H3518	R404148
S1724, S1754 Conventional RA39, 42, 44, 186, 199	Rd	BX		7142 - D225	MD225	R40H5010	R40H5522	NR	NR
S1724, S1754 Conventional RA44, 186	Ra	WG	15 " x 7 "	4597 - 383	R700383	R40H597	R40H9200	N/A	N/A
	Rm	WG	15 " x 7 "	4597 - 383	R700383	R40H597	R40H9200	R40H3518	R404148
S1724, S1754 Conventional RA47, 57	Ra	WG	16 " x 6 "	1255 - 386	N/A	R40H597	R40H9200	N/A	N/A
	Rm	WG	16 " x 6 "	1255 - 386	N/A	R40H597	R40H9200	R404149	R404150
1982 C1710, C1750 Cargostar Tilt Cab FA109, 208	Fa	WG	15 " x 3 "	1245C - 321	R700321	R40H521	R40H9237	R40H3502	R40H3503
	Fm	WG	15 " x 3 "	1245A - 235	R700235	R40H521	R40H9201	R40H3524	R40H3524
C1710, C1750 Cargostar Tilt Cab FA118, 127, 139	Fa	WG	15 " x 5 "	1345A - 491	N/A	R40H521	R40H9237	R40H3502	R40H3503
	Fm	WG	15 " x 5 "	1345 - 490	N/A	R40H521	R40H9201	R40H3524	R40H3524
C1710, C1750 Cargostar Tilt Cab FA208	Fa	WG	15 " x 3-1/2 "	1280B - 322	R464004	R40H521	R40H9237	R40H3502	R40H3503

37 - Also available as a New unit

38 - First design, may have external joining tube and uses steel pistons

39 - First design, uses steel pistons.

40 - For chrome plated steel version, use R4090070P

52 - 18" Length

201 - Steel Piston

272 - 6 Stud, U Shape

302 - Power Brakes, Dual System

332 - Power Brakes, Hydraulic Booster

MERITOR DRUM OR ROTOR NO.	CALIPER OR CYLINDER BORE SIZE	MERITOR CALIPER OR WHEEL CYLINDER (LEFT)	MERITOR CALIPER OR WHEEL CYLINDER (RIGHT)	MERITOR CALIPER OR WHEEL CYLINDER REPAIR KIT	MERITOR CALIPER PISTON	MERITOR MASTER CYLINDER	MERITOR MASTER CYLINDER KIT	MERITOR BRAKE HOSE (LEFT)	MERITOR BRAKE HOSE (RIGHT)
									ITE(Cont.)
170, 1700, 1710, 1723, 1724, 1750, 1753, 1754 SERIES CONVENTIONAL CAB, SCHOOL BUS, TILT CAB(Cont.)									
N/A	1-1/4 "	R4133581	R4133582	R4166923	NR	-	-	-	-
N/A	1-1/4 "	R4133581	R4133582	R4166923	NR	-	-	-	-
N/A	1-1/4 "	R4133581	R4133582	R4166923	NR	-	-	-	-
23-122527-002[272]	3-3/8 "	R42R55099	R42R55098[37]	R4066780	R4090021[201]	R4111993[302]	R4122386	R458632	R458632
23-122527-002[272]	3-3/8 "	R42R55099	R42R55098[37]	R4066780	R4090021[201]	R4111993[302]	R4122386	R4577503	R4577503
23-122527-002[272]	3-3/8 "	R42R55099	R42R55098[37]	R4066780	R4090021[201]	R4111294[332]	R4122346	R458632	R458632
23-122527-002[272]	3-3/8 "	R42R55099	R42R55098[37]	R4066780	R4090021[201]	R4111294[332]	R4122346	R4577503	R4577503
23-122527-002[272]	2-19/32 "	R42R55245	R42R55245[38]	R402235118	R402238231[201]	R4111294[332]	R4122346	R4577503	R4577503
23-122527-002[272]	2-19/32 "	R42R55245	R42R55245[38]	R402235118	R402238231[201]	R4111993[302]	R4122386	R458632	R458632
23-122527-002[272]	2-19/32 "	R42R55245	R42R55245[38]	R402235118	R402238231[201]	R4111294[332]	R4122346	R458632	R458632
23-122527-002[272]	2-19/32 "	R42R55245	R42R55245[38]	R402235118	R402238231[201]	R4111993[302]	R4122386	R4577503	R4577503
N/A	1-1/4 "	R4133581	R4133582	R4166923	NR	-	-	-	-
N/A	1-1/4 "	R4133581	R4133582	R4166923	NR	-	-	-	-
N/A	1-1/4 "	R4133581	R4133582	R4166923	NR	-	-	-	-
N/A	1-1/4 "	R4133581	R4133582	R4166923	NR	-	-	-	-
N/A	1-1/4 "	R4133581	R4133582	R4166923	NR	-	-	-	-
N/A	1-1/2 "	R4133580	R4133580	Discontinued	NR	-	-	-	-
N/A	1-1/2 "	R4133580	R4133580	Discontinued	NR	-	-	-	-
N/A	1-1/2 "	R4133580	R4133580	Discontinued	NR	-	-	-	-
N/A	1-1/2 "	R4133580	R4133580	Discontinued	NR	-	-	-	-
N/A	1-1/2 "	R4133580	R4133580	Discontinued	NR	-	-	-	-
23-122527-002[272]	2-19/32 "	R42R55245	R42R55245[38]	R402235118	R402238231[201]	-	-	R458634[52]	R458634
N/A	1-5/8 "	R4133338	R4133338	R4166689	NR	-	-	-	-
N/A	1-5/8 "	R4133338	R4133338	R4166689	NR	-	-	-	-
N/A	1-5/8 "	R4133338	R4133338	R4166689	NR	-	-	-	-
N/A	1-5/8 "	R4133338	R4133338	R4166689	NR	-	-	-	-
N/A	1-5/8 "	R4133338	R4133338	R4166689	NR	-	-	-	-
N/A	1-5/8 "	R4133338	R4133338	R4166689	NR	-	-	-	-
N/A	2-7/8 "	R429218X	R429218X[39]	R406532	R4090070[40]	-	-	R458634[52]	R458634
N/A	1-5/8 "	R4133338	R4133338	R4166689	NR	-	-	-	-
N/A	1-5/8 "	R4133338	R4133338	R4166689	NR	-	-	-	-
N/A	1-3/4 "	R4133400	R4133400	R4166917	NR	-	-	-	-
N/A	1-3/4 "	R4133400	R4133400	R4166917	NR	-	-	-	-
N/A	1-1/4 "	R4133581	R4133582	R4166923	NR	-	-	-	-
N/A	1-1/4 "	R4133581	R4133582	R4166923	NR	-	-	-	-
N/A		-	-	N/A	N/A	-	-	-	-
N/A		-	-	N/A	N/A	-	-	-	-
N/A	1-1/4 "	R4133581	R4133582	R4166923	NR	-	-	-	-

MAKE MODEL YEAR AXLE CODE AXLE WEIGHT	AXLE & BRK. TYPE	BRK. MFG.	BRAKE SIZE	FMSI	MERITOR DISC PAD OR BRAKE SHOE	MERITOR GUIDE PIN OR RETURN SPRING KIT	MERITOR CALIPER HWD. KIT OR RETURN SPRING KIT	MERITOR ADJUSTER KIT (LEFT WHEEL)	MERITOR ADJUSTER KIT (RIGHT WHEEL)
ITE(Cont.)									
170, 1700, 1710, 1723, 1724, 1750, 1753, 1754 SERIES CONVENTIONAL CAB, SCHOOL BUS, TILT CAB(Cont.)									
1982 C1710, C1750 Cargostar Tilt Cab FA208	Fm	WG	15 " x 3-1/2 "	1280 - 463	R700463	R40H521	R40H9201	R40H3524	R40H3524
C1710, C1750 Cargostar Tilt Cab FA48, 68, 70, 72	Fa	WG	14 " x 2-1/2 "	1294A - 325	N/A	R40H521	R40H9237	R40H3502	R40H3503
	Fm	WG	14 " x 2-1/2 "	1294 - 296	N/A	R40H521	R40H9201	R40H3524	R40H3524
C1710, C1750 Cargostar Tilt Cab FA71, 73, 101	Fa	WG	15 " x 3 "	1245C - 321	R700321	R40H521	R40H9237	R40H3502	R40H3503
	Fa	WG	15 " x 3-1/2 "	1280B - 322	R464004	R40H521	R40H9237	R40H3502	R40H3503
	Fm	WG	15 " x 3 "	1245A - 235	R700235	R40H521	R40H9201	R40H3524	R40H3524
	Fm	WG	15 " x 3-1/2 "	1280 - 463	R700463	R40H521	R40H9201	R40H3524	R40H3524
C1710, C1750 Cargostar Tilt Cab FA74	Fa	WG	15 " x 3 "	1245C - 321	R700321	R40H521	R40H9237	R40H3502	R40H3503
	Fm	WG	15 " x 3 "	1245A - 235	R700235	R40H521	R40H9201	R40H3524	R40H3524
C1710, C1750 Cargostar Tilt Cab FA78, 81	Fa	WG	15 " x 3 "	1245C - 321	R700321	R40H521	R40H9237	R40H3502	R40H3503
C1710, C1750 Cargostar Tilt Cab FA89, 91, 98	Fa	WG	15 " x 3 "	1245C - 321	R700321	R40H521	R40H9237	R40H3502	R40H3503
	Fm	WG	15 " x 3 "	1245A - 235	R700235	R40H521	R40H9201	R40H3524	R40H3524
C1710, C1750 Cargostar Tilt Cab RA184	Ra	WG	15 " x 4 "	4645A - 376	Discontinued	R40H597	R40H9200	R40H3540	R40H3541
	Rm	WG	15 " x 4 "	4645A - 376	Discontinued	R40H597	R40H9200	R40H3518	R404148
C1710, C1750 Cargostar Tilt Cab RA25, 184	Ra	WG	15 " x 5 "	1252 - 346	R700346	R40H597	R40H9200	R40H3540	R40H3541
	Rm	WG	15 " x 5 "	1252 - 346	R700346	R40H597	R40H9200	R40H3518	R404148
C1710, C1750 Cargostar Tilt Cab RA29, 30, 187	Ra	WG	15 " x 5 "	1252 - 346	R700346	R40H597	R40H9200	R40H3540	R40H3541
	Rm	WG	15 " x 5 "	1252 - 346	R700346	R40H597	R40H9200	R40H3518	R404148
C1710, C1750 Cargostar Tilt Cab RA30, 187	Ra	WG	16 " x 5 "	1254 - 385	N/A	R40H597	R40H9200	N/A	N/A
	Rm	WG	16 " x 5 "	1254 - 385	N/A	R40H597	R40H9200	R404149	R404150
C1710, C1750 Cargostar Tilt Cab RA30, 39, 44, 186, 189	Ra	WG	15 " x 6 "	4596 - 381	R700381	R40H597	R40H9200	R40H3540	R40H3541
	Rm	WG	15 " x 6 "	4596 - 381	R700381	R40H597	R40H9200	R40H3518	R404148
C1710, C1750 Cargostar Tilt Cab RA39, 199	Ra	WG	15 " x 7 "	4597 - 383	R700383	R40H597	R40H9200	R40H3540	R40H3541
	Rm	WG	15 " x 7 "	4597 - 383	R700383	R40H597	R40H9200	R40H3518	R404148
C1710, C1750 Cargostar Tilt Cab RA44, 186	Ra	WG	15 " x 7 "	4597 - 383	R700383	R40H597	R40H9200	N/A	N/A
	Rm	WG	15 " x 7 "	4597 - 383	R700383	R40H597	R40H9200	R40H3518	R404148
C1710, C1750 Cargostar Tilt Cab RA47, 57	Ra	WG	16 " x 6 "	1255 - 386	N/A	R40H597	R40H9200	N/A	N/A
	Rm	WG	16 " x 6 "	1255 - 386	N/A	R40H597	R40H9200	R404149	R404150
S1723, S1753 School Bus	Fd	BX		7108 - D184	MD184	R40H5010	R40H5519	NR	NR
	Fd	BX		7108 - D184	MD184	R40H5010	R40H5519	NR	NR
	Fd	BX		7108 - D184	MD184	R40H5010	R40H5519	NR	NR
	Fd	BX		7108 - D184	MD184	R40H5010	R40H5519	NR	NR
	Fd	BX		7108 - D184	MD184	R40H5010	R40H5519	NR	NR
	Fd	BX		7108 - D184	MD184	R40H5010	R40H5519	NR	NR

37 - Also available as a New unit
266 - 10 Stud, Hat Shaped
275 - 5 Stud, U Shape, .656 Dia. Studs
53 - Power Brakes
268 - 5 Stud, Hat Shape
302 - Power Brakes, Dual System
201 - Steel Piston
273 - 5 Stud, U Shape, .780 Dia. Studs

MERITOR DRUM OR ROTOR NO.	CALIPER OR CYLINDER BORE SIZE	MERITOR CALIPER OR WHEEL CYLINDER (LEFT)	MERITOR CALIPER OR WHEEL CYLINDER (RIGHT)	MERITOR CALIPER OR WHEEL CYLINDER REPAIR KIT	MERITOR CALIPER PISTON	MERITOR MASTER CYLINDER	MERITOR MASTER CYLINDER KIT	MERITOR BRAKE HOSE (LEFT)	MERITOR BRAKE HOSE (RIGHT)
ITE(Cont.)									
170, 1700, 1710, 1723, 1724, 1750, 1753, 1754 SERIES CONVENTIONAL CAB, SCHOOL BUS, TILT CAB(Cont.)									
N/A	1-1/4 "	R4133581	R4133582	R4166923	NR	-	-	-	-
N/A	1-1/8 "	R4133714	R4133715	R4166926	NR	-	-	-	-
N/A	1-1/8 "	R4133714	R4133715	R4166926	NR	-	-	-	-
N/A	1-1/4 "	R4133581	R4133582	R4166923	NR	-	-	-	-
N/A	1-1/4 "	R4133581	R4133582	R4166923	NR	-	-	-	-
N/A	1-1/4 "	R4133581	R4133582	R4166923	NR	-	-	-	-
N/A	1-1/4 "	R4133581	R4133582	R4166923	NR	-	-	-	-
N/A	1-1/4 "	R4133581	R4133582	R4166923	NR	-	-	-	-
N/A	1-1/4 "	R4133581	R4133582	R4166923	NR	-	-	-	-
N/A	1-1/4 "	R4133581	R4133582	R4166923	NR	-	-	-	-
N/A	1-1/4 "	R4133581	R4133582	R4166923	NR	-	-	-	-
N/A	1-1/4 "	R4133581	R4133582	R4166923	NR	-	-	-	-
N/A	1-1/2 "	R4133580	R4133580	Discontinued	NR	-	-	-	-
N/A	1-1/2 "	R4133580	R4133580	Discontinued	NR	-	-	-	-
N/A	1-1/2 "	R4133580	R4133580	Discontinued	NR	-	-	-	-
N/A	1-1/2 "	R4133580	R4133580	Discontinued	NR	-	-	-	-
N/A	1-1/2 "	R4133580	R4133580	Discontinued	NR	-	-	-	-
N/A	1-1/2 "	R4133580	R4133580	Discontinued	NR	-	-	-	-
N/A	1-5/8 "	R4133338	R4133338	R4166689	NR	-	-	-	-
N/A	1-5/8 "	R4133338	R4133338	R4166689	NR	-	-	-	-
N/A	1-5/8 "	R4133338	R4133338	R4166689	NR	-	-	-	-
N/A	1-5/8 "	R4133338	R4133338	R4166689	NR	-	-	-	-
N/A	1-5/8 "	R4133338	R4133338	R4166689	NR	-	-	-	-
N/A	1-5/8 "	R4133338	R4133338	R4166689	NR	-	-	-	-
N/A	1-5/8 "	R4133338	R4133338	R4166689	NR	-	-	-	-
N/A	1-5/8 "	R4133338	R4133338	R4166689	NR	-	-	-	-
N/A	1-3/4 "	R4133400	R4133400	R4166917	NR	-	-	-	-
N/A	1-3/4 "	R4133400	R4133400	R4166917	NR	-	-	-	-
23-123552-004[266]	3-3/8 "	R42R55099	R42R55098[37]	R4066780	R4090021[201]	N/A[53]	-	R4577503	R4577503
R44141858[275]	3-3/8 "	R42R55099	R42R55098[37]	R4066780	R4090021[201]	R4111993[302]	R4122386	R4577503	R4577503
R44141476[268]	3-3/8 "	R42R55099	R42R55098[37]	R4066780	R4090021[201]	N/A[53]	-	R458632	R458632
23-122920-002[273]	3-3/8 "	R42R55099	R42R55098[37]	R4066780	R4090021[201]	R4111993[302]	R4122386	R458632	R458632
R44141858[275]	3-3/8 "	R42R55099	R42R55098[37]	R4066780	R4090021[201]	R4111993[302]	R4122386	R4577503	R4577503
R44141858[275]	3-3/8 "	R42R55099	R42R55098[37]	R4066780	R4090021[201]	R4111993[302]	R4122386	R458632	R458632

MAKE MODEL YEAR AXLE CODE AXLE WEIGHT	AXLE & BRK. TYPE	BRK. MFG.	BRAKE SIZE	FMSI	MERITOR DISC PAD OR BRAKE SHOE	MERITOR GUIDE PIN OR RETURN SPRING KIT	MERITOR CALIPER HWD. KIT OR RETURN SPRING KIT	MERITOR ADJUSTER KIT (LEFT WHEEL)	MERITOR ADJUSTER KIT (RIGHT WHEEL)
ITE(Cont.)									
170, 1700, 1710, 1723, 1724, 1750, 1753, 1754 SERIES CONVENTIONAL CAB, SCHOOL BUS, TILT CAB(Cont.)									
1982									
	Fd	BX		7108 - D184	MD184	R40H5010	R40H5519	NR	NR
	Fd	BX		7108 - D184	MD184	R40H5010	R40H5519	NR	NR
	Fd	BX		7108 - D184	MD184	R40H5010	R40H5519	NR	NR
	Fd	BX		7108 - D184	MD184	R40H5010	R40H5519	NR	NR
	Fd	BX		7108 - D184	MD184	R40H5010	R40H5519	NR	NR
	Fd	BX		7108 - D184	MD184	R40H5010	R40H5519	NR	NR
	Fd	BX		7108 - D184	MD184	R40H5010	R40H5519	NR	NR
	Fd	BX		7108 - D184	MD184	R40H5010	R40H5519	NR	NR
	Fd	BX		7108 - D184	MD184	R40H5010	R40H5519	NR	NR
	Fd	BX		7108 - D184	MD184	R40H5010	R40H5519	NR	NR
	Fd	BX		7108 - D184	MD184	R40H5010	R40H5519	NR	NR
	Fd	BX		7108 - D184	MD184	R40H5010	R40H5519	NR	NR
	Fd	BX		7108 - D184	MD184	R40H5010	R40H5519	NR	NR
	Fd	BX		7108 - D184	MD184	R40H5010	R40H5519	NR	NR
	Fd	BX		7108 - D184	MD184	R40H5010	R40H5519	NR	NR
	Fd	BX		7108 - D184	MD184	R40H5010	R40H5519	NR	NR
	Fd	BX		7108 - D184	MD184	R40H5010	R40H5519	NR	NR
	Fd	BX		7108 - D184	MD184	R40H5010	R40H5519	NR	NR
	Fd	BX		7108 - D184	MD184	R40H5010	R40H5519	NR	NR
	Fd	BX		7108 - D184	MD184	R40H5010	R40H5519	NR	NR
	Fd	BX		7108 - D184	MD184	R40H5010	R40H5519	NR	NR
	Fd	BX		7108 - D184	MD184	R40H5010	R40H5519	NR	NR
	Fd	BX		7108 - D184	MD184	R40H5010	R40H5519	NR	NR
	Fd	BX		7108 - D184	MD184	R40H5010	R40H5519	NR	NR
	Fd	BX		7108 - D184	MD184	R40H5010	R40H5519	NR	NR
	Fd	BX		7108 - D184	MD184	R40H5010	R40H5519	NR	NR
	Fd	BX		7108 - D184	MD184	R40H5010	R40H5519	NR	NR
	Fd	BX		7108 - D184	MD184	R40H5010	R40H5519	NR	NR
	Fd	BX		7108 - D184	MD184	R40H5010	R40H5519	NR	NR
	Fd	BX		7108 - D184	MD184	R40H5010	R40H5519	NR	NR
	Fd	BX		7108 - D184	MD184	R40H5010	R40H5519	NR	NR
	Fd	BX		7108 - D184	MD184	R40H5010	R40H5519	NR	NR
	Fd	BX		7108 - D184	MD184	R40H5010	R40H5519	NR	NR
	Fd	BX		7108 - D184	MD184	R40H5010	R40H5519	NR	NR
S1723, S1753 School Bus FA101									
	Fd	BX		7108 - D184	MD184	R40H5010	R40H5519	NR	NR
	Fd	BX		7108 - D184	MD184	R40H5010	R40H5519	NR	NR
	Fd	BX		7108 - D184	MD184	R40H5010	R40H5519	NR	NR
	Fd	BX		7108 - D184	MD184	R40H5010	R40H5519	NR	NR
	Fd	BX		7108 - D184	MD184	R40H5010	R40H5519	NR	NR
	Fd	BX		7108 - D184	MD184	R40H5010	R40H5519	NR	NR
	Fd	BX		7108 - D184	MD184	R40H5010	R40H5519	NR	NR
	Fd	BX		7108 - D184	MD184	R40H5010	R40H5519	NR	NR
	Fd	BX		7108 - D184	MD184	R40H5010	R40H5519	NR	NR
	Fd	BX		7108 - D184	MD184	R40H5010	R40H5519	NR	NR
	Fd	BX		7108 - D184	MD184	R40H5010	R40H5519	NR	NR
	Fd	BX		7108 - D184	MD184	R40H5010	R40H5519	NR	NR
	Fd	BX		7108 - D184	MD184	R40H5010	R40H5519	NR	NR
	Fd	BX		7108 - D184	MD184	R40H5010	R40H5519	NR	NR
	Fd	BX		7108 - D184	MD184	R40H5010	R40H5519	NR	NR
	Fd	BX		7108 - D184	MD184	R40H5010	R40H5519	NR	NR
	Fd	BX		7108 - D184	MD184	R40H5010	R40H5519	NR	NR
	Fd	BX		7108 - D184	MD184	R40H5010	R40H5519	NR	NR
	Fd	BX		7108 - D184	MD184	R40H5010	R40H5519	NR	NR
	Fd	BX		7108 - D184	MD184	R40H5010	R40H5519	NR	NR
	Fd	BX		7108 - D184	MD184	R40H5010	R40H5519	NR	NR
	Fd	BX		7108 - D184	MD184	R40H5010	R40H5519	NR	NR
	Fd	BX		7108 - D184	MD184	R40H5010	R40H5519	NR	NR
	Fd	BX		7108 - D184	MD184	R40H5010	R40H5519	NR	NR
	Fd	BX		7108 - D184	MD184	R40H5010	R40H5519	NR	NR
	Fd	BX		7108 - D184	MD184	R40H5010	R40H5519	NR	NR
	Fd	BX		7108 - D184	MD184	R40H5010	R40H5519	NR	NR
	Fd	BX		7108 - D184	MD184	R40H5010	R40H5519	NR	NR
	Fd	BX		7108 - D184	MD184	R40H5010	R40H5519	NR	NR
	Fd	BX		7108 - D184	MD184	R40H5010	R40H5519	NR	NR
S1723, S1753 School Bus FA309, 329, 339									
	Fd	BX		7142 - D225	MD225	R40H5010	R40H5522	NR	NR
	Fd	BX		7142 - D225	MD225	R40H5010	R40H5522	NR	NR
	Fd	BX		7142 - D225	MD225	R40H5010	R40H5522	NR	NR

37 - Also available as a New unit

38 - First design, may have external joining tube and uses steel pistons

39 - First design, uses steel pistons.

40 - For chrome plated steel version, use R4090070P

53 - Power Brakes

201 - Steel Piston

266 - 10 Stud, Hat Shaped

268 - 5 Stud, Hat Shape

271 - 6 Stud, Hat Shape

MERITOR DRUM OR ROTOR NO.	CALIPER OR CYLINDER BORE SIZE	MERITOR CALIPER OR WHEEL CYLINDER (LEFT)	MERITOR CALIPER OR WHEEL CYLINDER (RIGHT)	MERITOR CALIPER OR WHEEL CYLINDER REPAIR KIT	MERITOR CALIPER PISTON	MERITOR MASTER CYLINDER	MERITOR MASTER CYLINDER KIT	MERITOR BRAKE HOSE (LEFT)	MERITOR BRAKE HOSE (RIGHT)
									ITE(Cont.)
170, 1700, 1710, 1723, 1724, 1750, 1753, 1754 SERIES CONVENTIONAL CAB, SCHOOL BUS, TILT CAB(Cont.)									
23-123552-004[266]	3-3/8 "	R42R55099	R42R55098[37]	R4066780	R4090021[201]	R4111993[302]	R4122386	R458632	R458632
23-123572-004[271]	3-3/8 "	R42R55099	R42R55098[37]	R4066780	R4090021[201]	N/A[53]	-	R4577503	R4577503
23-123572-004[271]	3-3/8 "	R42R55099	R42R55098[37]	R4066780	R4090021[201]	N/A[53]	-	R458632	R458632
23-123552-004[266]	3-3/8 "	R42R55099	R42R55098[37]	R4066780	R4090021[201]	N/A[53]	-	R4577503	R4577503
23-123572-004[271]	3-3/8 "	R42R55099	R42R55098[37]	R4066780	R4090021[201]	R4111993[302]	R4122386	R4577503	R4577503
R44141858[275]	3-3/8 "	R42R55099	R42R55098[37]	R4066780	R4090021[201]	N/A[53]	-	R4577503	R4577503
R44141476[268]	3-3/8 "	R42R55099	R42R55098[37]	R4066780	R4090021[201]	N/A[53]	-	R458632	R458632
23-122920-002[273]	3-3/8 "	R42R55099	R42R55098[37]	R4066780	R4090021[201]	R4111993[302]	R4122386	R4577503	R4577503
R44141858[275]	3-3/8 "	R42R55099	R42R55098[37]	R4066780	R4090021[201]	R4111993[302]	R4122386	R458632	R458632
R44141476[268]	3-3/8 "	R42R55099	R42R55098[37]	R4066780	R4090021[201]	N/A[53]	-	R4577503	R4577503
23-123552-004[266]	3-3/8 "	R42R55099	R42R55098[37]	R4066780	R4090021[201]	R4111993[302]	R4122386	R4577503	R4577503
23-123572-004[271]	3-3/8 "	R42R55099	R42R55098[37]	R4066780	R4090021[201]	N/A[53]	-	R458632	R458632
R44141476[268]	3-3/8 "	R42R55099	R42R55098[37]	R4066780	R4090021[201]	R4111993[302]	R4122386	R458632	R458632
23-122920-002[273]	3-3/8 "	R42R55099	R42R55098[37]	R4066780	R4090021[201]	N/A[53]	-	R458632	R458632
R44141476[268]	3-3/8 "	R42R55099	R42R55098[37]	R4066780	R4090021[201]	R4111993[302]	R4122386	R458632	R458632
23-123572-004[271]	3-3/8 "	R42R55099	R42R55098[37]	R4066780	R4090021[201]	N/A[53]	-	R4577503	R4577503
23-123552-004[266]	3-3/8 "	R42R55099	R42R55098[37]	R4066780	R4090021[201]	R4111993[302]	R4122386	R4577503	R4577503
R44141476[268]	3-3/8 "	R42R55099	R42R55098[37]	R4066780	R4090021[201]	N/A[53]	-	R4577503	R4577503
23-122920-002[273]	3-3/8 "	R42R55099	R42R55098[37]	R4066780	R4090021[201]	N/A[53]	-	R458632	R458632
23-123572-004[271]	3-3/8 "	R42R55099	R42R55098[37]	R4066780	R4090021[201]	R4111993[302]	R4122386	R458632	R458632
R44141858[275]	3-3/8 "	R42R55099	R42R55098[37]	R4066780	R4090021[201]	N/A[53]	-	R458632	R458632
23-123552-004[266]	3-3/8 "	R42R55099	R42R55098[37]	R4066780	R4090021[201]	N/A[53]	-	R458632	R458632
23-123572-004[271]	3-3/8 "	R42R55099	R42R55098[37]	R4066780	R4090021[201]	R4111993[302]	R4122386	R4577503	R4577503
R44141858[275]	3-3/8 "	R42R55099	R42R55098[37]	R4066780	R4090021[201]	N/A[53]	-	R4577503	R4577503
23-122920-002[273]	3-3/8 "	R42R55099	R42R55098[37]	R4066780	R4090021[201]	N/A[53]	-	R4577503	R4577503
23-122920-002[273]	3-3/8 "	R42R55099	R42R55098[37]	R4066780	R4090021[201]	N/A[53]	-	R4577503	R4577503
R44141858[275]	3-3/8 "	R42R55099	R42R55098[37]	R4066780	R4090021[201]	N/A[53]	-	R458632	R458632
23-123552-004[266]	3-3/8 "	R42R55099	R42R55098[37]	R4066780	R4090021[201]	N/A[53]	-	R458632	R458632
R44141476[268]	3-3/8 "	R42R55099	R42R55098[37]	R4066780	R4090021[201]	R4111993[302]	R4122386	R4577503	R4577503
R44141476[268]	3-3/8 "	R42R55099	R42R55098[37]	R4066780	R4090021[201]	R4111993[302]	R4122386	R4577503	R4577503
23-123572-004[271]	3-3/8 "	R42R55099	R42R55098[37]	R4066780	R4090021[201]	R4111993[302]	R4122386	R458632	R458632
23-123552-004[266]	3-3/8 "	R42R55099	R42R55098[37]	R4066780	R4090021[201]	R4111993[302]	R4122386	R458632	R458632
23-122920-002[273]	3-3/8 "	R42R55099	R42R55098[37]	R4066780	R4090021[201]	R4111993[302]	R4122386	R458632	R458632
23-122920-002[273]	3-3/8 "	R42R55099	R42R55098[37]	R4066780	R4090021[201]	R4111993[302]	R4122386	R4577503	R4577503
R44141476[268]	2-19/32 "	R42R55245	R42R55245[38]	R402235118	R402238231[201]	N/A[53]	-	R458632	R458632
23-123572-004[271]	2-19/32 "	R42R55245	R42R55245[38]	R402235118	R402238231[201]	N/A[53]	-	R4577503	R4577503
R44141858[275]	2-19/32 "	R42R55245	R42R55245[38]	R402235118	R402238231[201]	R4111993[302]	R4122386	R4577503	R4577503
23-122527-002[272]	2-19/32 "	R42R55245	R42R55245[38]	R402235118	R402238231[201]	N/A[53]	-	R4577503	R4577503
23-122920-002[273]	2-19/32 "	R42R55245	R42R55245[38]	R402235118	R402238231[201]	R4111993[302]	R4122386	R458632	R458632
R44141858[275]	2-19/32 "	R42R55245	R42R55245[38]	R402235118	R402238231[201]	N/A[53]	-	R4577503	R4577503
R44141858[275]	2-19/32 "	R42R55245	R42R55245[38]	R402235118	R402238231[201]	R4111993[302]	R4122386	R458632	R458632
23-122920-002[273]	2-19/32 "	R42R55245	R42R55245[38]	R402235118	R402238231[201]	R4111993[302]	R4122386	R4577503	R4577503
23-122527-002[272]	2-19/32 "	R42R55245	R42R55245[38]	R402235118	R402238231[201]	R4111993[302]	R4122386	R458632	R458632
23-123552-004[266]	2-19/32 "	R42R55245	R42R55245[38]	R402235118	R402238231[201]	N/A[53]	-	R4577503	R4577503
23-123552-004[266]	2-19/32 "	R42R55245	R42R55245[38]	R402235118	R402238231[201]	N/A[53]	-	R458632	R458632
23-123572-004[271]	2-19/32 "	R42R55245	R42R55245[38]	R402235118	R402238231[201]	R4111993[302]	R4122386	R4577503	R4577503
R44141476[268]	2-19/32 "	R42R55245	R42R55245[38]	R402235118	R402238231[201]	R4111993[302]	R4122386	R4577503	R4577503
23-122920-002[273]	2-19/32 "	R42R55245	R42R55245[38]	R402235118	R402238231[201]	N/A[53]	-	R4577503	R4577503
23-122527-002[272]	2-19/32 "	R42R55245	R42R55245[38]	R402235118	R402238231[201]	N/A[53]	-	R458632	R458632
23-123572-004[271]	2-19/32 "	R42R55245	R42R55245[38]	R402235118	R402238231[201]	R4111993[302]	R4122386	R458632	R458632
R44141476[268]	2-19/32 "	R42R55245	R42R55245[38]	R402235118	R402238231[201]	R4111993[302]	R4122386	R458632	R458632
23-122920-002[273]	2-19/32 "	R42R55245	R42R55245[38]	R402235118	R402238231[201]	N/A[53]	-	R458632	R458632
23-123552-004[266]	2-19/32 "	R42R55245	R42R55245[38]	R402235118	R402238231[201]	R4111993[302]	R4122386	R458632	R458632
23-122527-002[272]	2-19/32 "	R42R55245	R42R55245[38]	R402235118	R402238231[201]	R4111993[302]	R4122386	R4577503	R4577503
23-123572-004[271]	2-19/32 "	R42R55245	R42R55245[38]	R402235118	R402238231[201]	N/A[53]	-	R458632	R458632
R44141476[268]	2-19/32 "	R42R55245	R42R55245[38]	R402235118	R402238231[201]	N/A[53]	-	R4577503	R4577503
R44141858[275]	2-19/32 "	R42R55245	R42R55245[38]	R402235118	R402238231[201]	N/A[53]	-	R458632	R458632
23-123552-004[266]	2-19/32 "	R42R55245	R42R55245[38]	R402235118	R402238231[201]	R4111993[302]	R4122386	R4577503	R4577503
23-123552-004[266]	2-7/8 "	R429218X	R429218X[39]	R406532	R4090070[40]	N/A[53]	-	R458632	R458632
23-122527-002[272]	2-7/8 "	R429218X	R429218X[39]	R406532	R4090070[40]	R4111993[302]	R4122386	R4577503	R4577503
23-122920-002[273]	2-7/8 "	R429218X	R429218X[39]	R406532	R4090070[40]	N/A[53]	-	R4577503	R4577503

272 - 6 Stud, U Shape

273 - 5 Stud, U Shape, .780 Dia. Studs

275 - 5 Stud, U Shape, .656 Dia. Studs

302 - Power Brakes, Dual System

MAKE MODEL YEAR AXLE CODE AXLE WEIGHT	AXLE & BRK. TYPE	BRK. MFG.	BRAKE SIZE	FMSI	MERITOR DISC PAD OR BRAKE SHOE	MERITOR GUIDE PIN OR RETURN SPRING KIT	MERITOR CALIPER HWD. KIT OR RETURN SPRING KIT	MERITOR ADJUSTER KIT (LEFT WHEEL)	MERITOR ADJUSTER KIT (RIGHT WHEEL)
ITE(Cont.)									
170, 1700, 1710, 1723, 1724, 1750, 1753, 1754 SERIES CONVENTIONAL CAB, SCHOOL BUS, TILT CAB(Cont.)									
1982									
	Fd	BX		7142 - D225	MD225	R40H5010	R40H5522	NR	NR
	Fd	BX		7142 - D225	MD225	R40H5010	R40H5522	NR	NR
	Fd	BX		7142 - D225	MD225	R40H5010	R40H5522	NR	NR
	Fd	BX		7142 - D225	MD225	R40H5010	R40H5522	NR	NR
	Fd	BX		7142 - D225	MD225	R40H5010	R40H5522	NR	NR
	Fd	BX		7142 - D225	MD225	R40H5010	R40H5522	NR	NR
	Fd	BX		7142 - D225	MD225	R40H5010	R40H5522	NR	NR
	Fd	BX		7142 - D225	MD225	R40H5010	R40H5522	NR	NR
	Fd	BX		7142 - D225	MD225	R40H5010	R40H5522	NR	NR
	Fd	BX		7142 - D225	MD225	R40H5010	R40H5522	NR	NR
	Fd	BX		7142 - D225	MD225	R40H5010	R40H5522	NR	NR
	Fd	BX		7142 - D225	MD225	R40H5010	R40H5522	NR	NR
	Fd	BX		7142 - D225	MD225	R40H5010	R40H5522	NR	NR
	Fd	BX		7142 - D225	MD225	R40H5010	R40H5522	NR	NR
	Fd	BX		7142 - D225	MD225	R40H5010	R40H5522	NR	NR
	Fd	BX		7142 - D225	MD225	R40H5010	R40H5522	NR	NR
	Fd	BX		7142 - D225	MD225	R40H5010	R40H5522	NR	NR
	Fd	BX		7142 - D225	MD225	R40H5010	R40H5522	NR	NR
	Fd	BX		7142 - D225	MD225	R40H5010	R40H5522	NR	NR
	Fd	BX		7142 - D225	MD225	R40H5010	R40H5522	NR	NR
	Fd	BX		7142 - D225	MD225	R40H5010	R40H5522	NR	NR
	Fd	BX		7142 - D225	MD225	R40H5010	R40H5522	NR	NR
	Fd	BX		7142 - D225	MD225	R40H5010	R40H5522	NR	NR
	Fd	BX		7142 - D225	MD225	R40H5010	R40H5522	NR	NR
	Fd	BX		7142 - D225	MD225	R40H5010	R40H5522	NR	NR
	Fd	BX		7142 - D225	MD225	R40H5010	R40H5522	NR	NR
	Fd	BX		7142 - D225	MD225	R40H5010	R40H5522	NR	NR
	Fd	BX		7142 - D225	MD225	R40H5010	R40H5522	NR	NR
	Fd	BX		7142 - D225	MD225	R40H5010	R40H5522	NR	NR
	Fd	BX		7142 - D225	MD225	R40H5010	R40H5522	NR	NR
	Fd	BX		7142 - D225	MD225	R40H5010	R40H5522	NR	NR
	Fd	BX		7142 - D225	MD225	R40H5010	R40H5522	NR	NR
	Fd	BX		7142 - D225	MD225	R40H5010	R40H5522	NR	NR
	Fd	BX		7142 - D225	MD225	R40H5010	R40H5522	NR	NR
	Fd	BX		7142 - D225	MD225	R40H5010	R40H5522	NR	NR
	Fd	BX		7142 - D225	MD225	R40H5010	R40H5522	NR	NR
	Fd	BX		7142 - D225	MD225	R40H5010	R40H5522	NR	NR
	Fd	BX		7142 - D225	MD225	R40H5010	R40H5522	NR	NR
	Fd	BX		7142 - D225	MD225	R40H5010	R40H5522	NR	NR
	Fd	BX		7142 - D225	MD225	R40H5010	R40H5522	NR	NR
	Fd	BX		7142 - D225	MD225	R40H5010	R40H5522	NR	NR
	Fd	BX		7142 - D225	MD225	R40H5010	R40H5522	NR	NR
	Fd	BX		7142 - D225	MD225	R40H5010	R40H5522	NR	NR
	Fd	BX		7142 - D225	MD225	R40H5010	R40H5522	NR	NR
	Fd	BX		7142 - D225	MD225	R40H5010	R40H5522	NR	NR
	Fd	BX		7142 - D225	MD225	R40H5010	R40H5522	NR	NR
	Fd	BX		7142 - D225	MD225	R40H5010	R40H5522	NR	NR
	Fd	BX		7142 - D225	MD225	R40H5010	R40H5522	NR	NR
	Fd	BX		7142 - D225	MD225	R40H5010	R40H5522	NR	NR
	Fd	BX		7142 - D225	MD225	R40H5010	R40H5522	NR	NR
	Fd	BX		7142 - D225	MD225	R40H5010	R40H5522	NR	NR
	Fd	BX		7142 - D225	MD225	R40H5010	R40H5522	NR	NR
	Fd	BX		7142 - D225	MD225	R40H5010	R40H5522	NR	NR
	Fd	BX		7142 - D225	MD225	R40H5010	R40H5522	NR	NR
	Fd	BX		7142 - D225	MD225	R40H5010	R40H5522	NR	NR
	Fd	BX		7142 - D225	MD225	R40H5010	R40H5522	NR	NR
	Fd	BX		7142 - D225	MD225	R40H5010	R40H5522	NR	NR
	Fd	BX		7142 - D225	MD225	R40H5010	R40H5522	NR	NR
	Fd	BX		7142 - D225	MD225	R40H5010	R40H5522	NR	NR
	Fd	BX		7142 - D225	MD225	R40H5010	R40H5522	NR	NR
	Fd	BX		7142 - D225	MD225	R40H5010	R40H5522	NR	NR
	Fd	BX		7142 - D225	MD225	R40H5010	R40H5522	NR	NR
	Fd	BX		7142 - D225	MD225	R40H5010	R40H5522	NR	NR
	Fd	BX		7142 - D225	MD225	R40H5010	R40H5522	NR	NR
	Fd	BX		7142 - D225	MD225	R40H5010	R40H5522	NR	NR
	Fd	BX		7142 - D225	MD225	R40H5010	R40H5522	NR	NR

39 - First design, uses steel pistons.
40 - For chrome plated steel version, use R4090070P
53 - Power Brakes
266 - 10 Stud, Hat Shaped
268 - 5 Stud, Hat Shape
271 - 6 Stud, Hat Shape
272 - 6 Stud, U Shape
273 - 5 Stud, U Shape, .780 Dia. Studs
275 - 5 Stud, U Shape, .656 Dia. Studs

MERITOR DRUM OR ROTOR NO.	CALIPER OR CYLINDER BORE SIZE	MERITOR CALIPER OR WHEEL CYLINDER (LEFT)	MERITOR CALIPER OR WHEEL CYLINDER (RIGHT)	MERITOR CALIPER OR WHEEL CYLINDER REPAIR KIT	MERITOR CALIPER PISTON	MERITOR MASTER CYLINDER	MERITOR MASTER CYLINDER KIT	MERITOR BRAKE HOSE (LEFT)	MERITOR BRAKE HOSE (RIGHT)
									ITE(Cont.)
170, 1700, 1710, 1723, 1724, 1750, 1753, 1754 SERIES CONVENTIONAL CAB, SCHOOL BUS, TILT CAB(Cont.)									
R44141858[275]	2-7/8 "	R429218X	R429218X[39]	R406532	R4090070[40]	R4111993[302]	R4122386	R4577503	R4577503
R44141858[275]	2-7/8 "	R429218X	R429218X[39]	R406532	R4090070[40]	R4111993[302]	R4122386	R458632	R458632
23-123572-004[271]	2-7/8 "	R429218X	R429218X[39]	R406532	R4090070[40]	N/A[53]	-	R4577503	R4577503
23-123572-004[271]	2-7/8 "	R429218X	R429218X[39]	R406532	R4090070[40]	N/A[53]	-	R458632	R458632
23-123552-004[266]	2-7/8 "	R429218X	R429218X[39]	R406532	R4090070[40]	R4111993[302]	R4122386	R4577503	R4577503
R44141858[275]	2-7/8 "	R429218X	R429218X[39]	R406532	R4090070[40]	N/A[53]	-	R4577503	R4577503
R44141858[275]	2-7/8 "	R429218X	R429218X[39]	R406532	R4090070[40]	R4111993[302]	R4122386	R458632	R458632
23-123572-004[271]	2-7/8 "	R429218X	R429218X[39]	R406532	R4090070[40]	N/A[53]	-	R458632	R458632
23-123552-004[266]	2-7/8 "	R429218X	R429218X[39]	R406532	R4090070[40]	R4111993[302]	R4122386	R4577503	R4577503
23-122920-002[273]	2-7/8 "	R429218X	R429218X[39]	R406532	R4090070[40]	R4111993[302]	R4122386	R4577503	R4577503
23-122527-002[272]	2-7/8 "	R429218X	R429218X[39]	R406532	R4090070[40]	N/A[53]	-	R458632	R458632
23-122527-002[272]	2-7/8 "	R429218X	R429218X[39]	R406532	R4090070[40]	N/A[53]	-	R4577503	R4577503
23-122920-002[273]	2-7/8 "	R429218X	R429218X[39]	R406532	R4090070[40]	R4111993[302]	R4122386	R458632	R458632
R44141858[275]	2-7/8 "	R429218X	R429218X[39]	R406532	R4090070[40]	R4111993[302]	R4122386	R458632	R458632
R44141858[275]	2-7/8 "	R429218X	R429218X[39]	R406532	R4090070[40]	N/A[53]	-	R4577503	R4577503
R44141858[275]	2-7/8 "	R429218X	R429218X[39]	R406532	R4090070[40]	N/A[53]	-	R458632	R458632
23-122920-002[273]	2-7/8 "	R429218X	R429218X[39]	R406532	R4090070[40]	R4111993[302]	R4122386	R4577503	R4577503
23-123552-004[266]	2-7/8 "	R429218X	R429218X[39]	R406532	R4090070[40]	R4111993[302]	R4122386	R458632	R458632
R44141476[268]	2-7/8 "	R429218X	R429218X[39]	R406532	R4090070[40]	R4111993[302]	R4122386	R458632	R458632
R44141476[268]	2-7/8 "	R429218X	R429218X[39]	R406532	R4090070[40]	N/A[53]	-	R4577503	R4577503
23-122920-002[273]	2-7/8 "	R429218X	R429218X[39]	R406532	R4090070[40]	R4111993[302]	R4122386	R458632	R458632
23-122920-002[273]	2-7/8 "	R429218X	R429218X[39]	R406532	R4090070[40]	N/A[53]	-	R458632	R458632
R44141476[268]	2-7/8 "	R429218X	R429218X[39]	R406532	R4090070[40]	N/A[53]	-	R458632	R458632
23-122527-002[272]	2-7/8 "	R429218X	R429218X[39]	R406532	R4090070[40]	N/A[53]	-	R4577503	R4577503
R44141476[268]	2-7/8 "	R429218X	R429218X[39]	R406532	R4090070[40]	R4111993[302]	R4122386	R4577503	R4577503
23-122920-002[273]	2-7/8 "	R429218X	R429218X[39]	R406532	R4090070[40]	N/A[53]	-	R4577503	R4577503
R44141476[268]	2-7/8 "	R429218X	R429218X[39]	R406532	R4090070[40]	N/A[53]	-	R4577503	R4577503
23-122527-002[272]	2-7/8 "	R429218X	R429218X[39]	R406532	R4090070[40]	N/A[53]	-	R458632	R458632
23-122527-002[272]	2-7/8 "	R429218X	R429218X[39]	R406532	R4090070[40]	R4111993[302]	R4122386	R458632	R458632
R44141476[268]	2-7/8 "	R429218X	R429218X[39]	R406532	R4090070[40]	N/A[53]	-	R4577503	R4577503
23-122920-002[273]	2-7/8 "	R429218X	R429218X[39]	R406532	R4090070[40]	R4111993[302]	R4122386	R4577503	R4577503
23-123572-004[271]	2-7/8 "	R429218X	R429218X[39]	R406532	R4090070[40]	N/A[53]	-	R4577503	R4577503
R44141476[268]	2-7/8 "	R429218X	R429218X[39]	R406532	R4090070[40]	R4111993[302]	R4122386	R4577503	R4577503
R44141476[268]	2-7/8 "	R429218X	R429218X[39]	R406532	R4090070[40]	N/A[53]	-	R458632	R458632
23-122527-002[272]	2-7/8 "	R429218X	R429218X[39]	R406532	R4090070[40]	R4111993[302]	R4122386	R4577503	R4577503
23-122920-002[273]	2-7/8 "	R429218X	R429218X[39]	R406532	R4090070[40]	N/A[53]	-	R458632	R458632
23-123572-004[271]	2-7/8 "	R429218X	R429218X[39]	R406532	R4090070[40]	N/A[53]	-	R458632	R458632
23-122527-002[272]	2-7/8 "	R429218X	R429218X[39]	R406532	R4090070[40]	R4111993[302]	R4122386	R458632	R458632
R44141476[268]	2-7/8 "	R429218X	R429218X[39]	R406532	R4090070[40]	R4111993[302]	R4122386	R4577503	R4577503
23-122920-002[273]	2-7/8 "	R429218X	R429218X[39]	R406532	R4090070[40]	N/A[53]	-	R4577503	R4577503
R44141858[275]	2-7/8 "	R429218X	R429218X[39]	R406532	R4090070[40]	R4111993[302]	R4122386	R458632	R458632
23-123572-004[271]	2-7/8 "	R429218X	R429218X[39]	R406532	R4090070[40]	R4111993[302]	R4122386	R4577503	R4577503
R44141476[268]	2-7/8 "	R429218X	R429218X[39]	R406532	R4090070[40]	R4111993[302]	R4122386	R458632	R458632
R44141858[275]	2-7/8 "	R429218X	R429218X[39]	R406532	R4090070[40]	N/A[53]	-	R4577503	R4577503
23-122920-002[273]	2-7/8 "	R429218X	R429218X[39]	R406532	R4090070[40]	R4111993[302]	R4122386	R458632	R458632
23-123572-004[271]	2-7/8 "	R429218X	R429218X[39]	R406532	R4090070[40]	N/A[53]	-	R4577503	R4577503
R44141858[275]	2-7/8 "	R429218X	R429218X[39]	R406532	R4090070[40]	R4111993[302]	R4122386	R4577503	R4577503
23-123552-004[266]	2-7/8 "	R429218X	R429218X[39]	R406532	R4090070[40]	R4111993[302]	R4122386	R4577503	R4577503
23-122920-002[273]	2-7/8 "	R429218X	R429218X[39]	R406532	R4090070[40]	N/A[53]	-	R458632	R458632
23-122920-002[273]	2-7/8 "	R429218X	R429218X[39]	R406532	R4090070[40]	R4111993[302]	R4122386	R458632	R458632
23-122527-002[272]	2-7/8 "	R429218X	R429218X[39]	R406532	R4090070[40]	R4111993[302]	R4122386	R458632	R458632
23-122920-002[273]	2-7/8 "	R429218X	R429218X[39]	R406532	R4090070[40]	N/A[53]	-	R458632	R458632
23-123552-004[266]	2-7/8 "	R429218X	R429218X[39]	R406532	R4090070[40]	N/A[53]	-	R458632	R458632
R44141476[268]	2-7/8 "	R429218X	R429218X[39]	R406532	R4090070[40]	R4111993[302]	R4122386	R4577503	R4577503
R44141476[268]	2-7/8 "	R429218X	R429218X[39]	R406532	R4090070[40]	R4111993[302]	R4122386	R458632	R458632
23-122527-002[272]	2-7/8 "	R429218X	R429218X[39]	R406532	R4090070[40]	N/A[53]	-	R4577503	R4577503
23-122920-002[273]	2-7/8 "	R429218X	R429218X[39]	R406532	R4090070[40]	R4111993[302]	R4122386	R4577503	R4577503
23-122527-002[272]	2-7/8 "	R429218X	R429218X[39]	R406532	R4090070[40]	R4111993[302]	R4122386	R458632	R458632
23-122527-002[272]	2-7/8 "	R429218X	R429218X[39]	R406532	R4090070[40]	R4111993[302]	R4122386	R458632	R458632
R44141476[268]	2-7/8 "	R429218X	R429218X[39]	R406532	R4090070[40]	N/A[53]	-	R4577503	R4577503
23-123572-004[271]	2-7/8 "	R429218X	R429218X[39]	R406532	R4090070[40]	N/A[53]	-	R458632	R458632
23-122527-002[272]	2-7/8 "	R429218X	R429218X[39]	R406532	R4090070[40]	N/A[53]	-	R458632	R458632
R44141476[268]	2-7/8 "	R429218X	R429218X[39]	R406532	R4090070[40]	N/A[53]	-	R458632	R458632

302 - Power Brakes, Dual System

MAKE MODEL YEAR AXLE CODE AXLE WEIGHT	AXLE & BRK. TYPE	BRK. MFG.	BRAKE SIZE	FMSI	MERITOR DISC PAD OR BRAKE SHOE	MERITOR GUIDE PIN OR RETURN SPRING KIT	MERITOR CALIPER HWD. KIT OR RETURN SPRING KIT	MERITOR ADJUSTER KIT (LEFT WHEEL)	MERITOR ADJUSTER KIT (RIGHT WHEEL)
ITE(Cont.)									
170, 1700, 1710, 1723, 1724, 1750, 1753, 1754 SERIES CONVENTIONAL CAB, SCHOOL BUS, TILT CAB(Cont.)									
1982									
	Fd	BX		7142 - D225	MD225	R40H5010	R40H5522	NR	NR
	Fd	BX		7142 - D225	MD225	R40H5010	R40H5522	NR	NR
	Fd	BX		7142 - D225	MD225	R40H5010	R40H5522	NR	NR
	Fd	BX		7142 - D225	MD225	R40H5010	R40H5522	NR	NR
	Fd	BX		7142 - D225	MD225	R40H5010	R40H5522	NR	NR
	Fd	BX		7142 - D225	MD225	R40H5010	R40H5522	NR	NR
	Fd	BX		7142 - D225	MD225	R40H5010	R40H5522	NR	NR
	Fd	BX		7142 - D225	MD225	R40H5010	R40H5522	NR	NR
	Fd	BX		7142 - D225	MD225	R40H5010	R40H5522	NR	NR
	Fd	BX		7142 - D225	MD225	R40H5010	R40H5522	NR	NR
	Fd	BX		7142 - D225	MD225	R40H5010	R40H5522	NR	NR
	Fd	BX		7142 - D225	MD225	R40H5010	R40H5522	NR	NR
	Fd	BX		7142 - D225	MD225	R40H5010	R40H5522	NR	NR
	Fd	BX		7142 - D225	MD225	R40H5010	R40H5522	NR	NR
	Fd	BX		7142 - D225	MD225	R40H5010	R40H5522	NR	NR
	Fd	BX		7142 - D225	MD225	R40H5010	R40H5522	NR	NR
	Fd	BX		7142 - D225	MD225	R40H5010	R40H5522	NR	NR
	Fd	BX		7142 - D225	MD225	R40H5010	R40H5522	NR	NR
	Fd	BX		7142 - D225	MD225	R40H5010	R40H5522	NR	NR
	Fd	BX		7142 - D225	MD225	R40H5010	R40H5522	NR	NR
	Fd	BX		7142 - D225	MD225	R40H5010	R40H5522	NR	NR
	Fd	BX		7142 - D225	MD225	R40H5010	R40H5522	NR	NR
	Fd	BX		7142 - D225	MD225	R40H5010	R40H5522	NR	NR
	Fd	BX		7142 - D225	MD225	R40H5010	R40H5522	NR	NR
	Fd	BX		7142 - D225	MD225	R40H5010	R40H5522	NR	NR
	Fd	BX		7142 - D225	MD225	R40H5010	R40H5522	NR	NR
	Fd	BX		7142 - D225	MD225	R40H5010	R40H5522	NR	NR
	Fd	BX		7142 - D225	MD225	R40H5010	R40H5522	NR	NR
	Fd	BX		7142 - D225	MD225	R40H5010	R40H5522	NR	NR
	Fd	BX		7142 - D225	MD225	R40H5010	R40H5522	NR	NR
	Fd	BX		7142 - D225	MD225	R40H5010	R40H5522	NR	NR
	Fd	BX		7142 - D225	MD225	R40H5010	R40H5522	NR	NR
	Fd	BX		7142 - D225	MD225	R40H5010	R40H5522	NR	NR
	Fd	BX		7142 - D225	MD225	R40H5010	R40H5522	NR	NR
	Fd	BX		7142 - D225	MD225	R40H5010	R40H5522	NR	NR
	Fd	BX		7142 - D225	MD225	R40H5010	R40H5522	NR	NR
	Fd	BX		7142 - D225	MD225	R40H5010	R40H5522	NR	NR
	Fd	BX		7142 - D225	MD225	R40H5010	R40H5522	NR	NR
	Fd	BX		7142 - D225	MD225	R40H5010	R40H5522	NR	NR
	Fd	BX		7142 - D225	MD225	R40H5010	R40H5522	NR	NR
	Fd	BX		7142 - D225	MD225	R40H5010	R40H5522	NR	NR
	Fd	BX		7142 - D225	MD225	R40H5010	R40H5522	NR	NR
	Fd	BX		7142 - D225	MD225	R40H5010	R40H5522	NR	NR
	Fd	BX		7142 - D225	MD225	R40H5010	R40H5522	NR	NR
	Fd	BX		7142 - D225	MD225	R40H5010	R40H5522	NR	NR
	Fd	BX		7142 - D225	MD225	R40H5010	R40H5522	NR	NR
	Fd	BX		7142 - D225	MD225	R40H5010	R40H5522	NR	NR
	Fd	BX		7142 - D225	MD225	R40H5010	R40H5522	NR	NR
	Fd	BX		7142 - D225	MD225	R40H5010	R40H5522	NR	NR
	Fd	BX		7142 - D225	MD225	R40H5010	R40H5522	NR	NR
	Fd	BX		7142 - D225	MD225	R40H5010	R40H5522	NR	NR
	Fd	BX		7142 - D225	MD225	R40H5010	R40H5522	NR	NR
	Fd	BX		7142 - D225	MD225	R40H5010	R40H5522	NR	NR
	Fd	BX		7142 - D225	MD225	R40H5010	R40H5522	NR	NR
	Fd	BX		7142 - D225	MD225	R40H5010	R40H5522	NR	NR
	Fd	BX		7142 - D225	MD225	R40H5010	R40H5522	NR	NR
	Fd	BX		7142 - D225	MD225	R40H5010	R40H5522	NR	NR
	Fd	BX		7142 - D225	MD225	R40H5010	R40H5522	NR	NR
	Fd	BX		7142 - D225	MD225	R40H5010	R40H5522	NR	NR
	Fd	BX		7142 - D225	MD225	R40H5010	R40H5522	NR	NR
	Fd	BX		7142 - D225	MD225	R40H5010	R40H5522	NR	NR
	Fd	BX		7142 - D225	MD225	R40H5010	R40H5522	NR	NR
	Fd	BX		7142 - D225	MD225	R40H5010	R40H5522	NR	NR
	Fd	BX		7142 - D225	MD225	R40H5010	R40H5522	NR	NR
	Fd	BX		7142 - D225	MD225	R40H5010	R40H5522	NR	NR
	Fd	BX		7142 - D225	MD225	R40H5010	R40H5522	NR	NR

39 - First design, uses steel pistons.
266 - 10 Stud, Hat Shaped
272 - 6 Stud, U Shape
40 - For chrome plated steel version, use R4090070P
268 - 5 Stud, Hat Shape
273 - 5 Stud, U Shape, .780 Dia. Studs
53 - Power Brakes
271 - 6 Stud, Hat Shape
275 - 5 Stud, U Shape, .656 Dia. Studs

MERITOR DRUM OR ROTOR NO.	CALIPER OR CYLINDER BORE SIZE	MERITOR CALIPER OR WHEEL CYLINDER (LEFT)	MERITOR CALIPER OR WHEEL CYLINDER (RIGHT)	MERITOR CALIPER OR WHEEL CYLINDER REPAIR KIT	MERITOR CALIPER PISTON	MERITOR MASTER CYLINDER	MERITOR MASTER CYLINDER KIT	MERITOR BRAKE HOSE (LEFT)	MERITOR BRAKE HOSE (RIGHT)
									ITE(Cont.)
170, 1700, 1710, 1723, 1724, 1750, 1753, 1754 SERIES CONVENTIONAL CAB, SCHOOL BUS, TILT CAB(Cont.)									
23-122920-002[273]	2-7/8 "	R429218X	R429218X[39]	R406532	R4090070[40]	N/A[53]	-	R458632	R458632
23-122527-002[272]	2-7/8 "	R429218X	R429218X[39]	R406532	R4090070[40]	R4111993[302]	R4122386	R4577503	R4577503
23-123552-004[266]	2-7/8 "	R429218X	R429218X[39]	R406532	R4090070[40]	R4111993[302]	R4122386	R458632	R458632
23-123552-004[266]	2-7/8 "	R429218X	R429218X[39]	R406532	R4090070[40]	N/A[53]	-	R458632	R458632
R44141858[275]	2-7/8 "	R429218X	R429218X[39]	R406532	R4090070[40]	N/A[53]	-	R458632	R458632
23-123572-004[271]	2-7/8 "	R429218X	R429218X[39]	R406532	R4090070[40]	R4111993[302]	R4122386	R4577503	R4577503
23-123572-004[271]	2-7/8 "	R429218X	R429218X[39]	R406532	R4090070[40]	R4111993[302]	R4122386	R458632	R458632
23-122527-002[272]	2-7/8 "	R429218X	R429218X[39]	R406532	R4090070[40]	N/A[53]	-	R458632	R458632
23-123572-004[271]	2-7/8 "	R429218X	R429218X[39]	R406532	R4090070[40]	N/A[53]	-	R4577503	R4577503
23-123552-004[266]	2-7/8 "	R429218X	R429218X[39]	R406532	R4090070[40]	N/A[53]	-	R4577503	R4577503
R44141858[275]	2-7/8 "	R429218X	R429218X[39]	R406532	R4090070[40]	N/A[53]	-	R4577503	R4577503
R44141858[275]	2-7/8 "	R429218X	R429218X[39]	R406532	R4090070[40]	R4111993[302]	R4122386	R4577503	R4577503
23-123572-004[271]	2-7/8 "	R429218X	R429218X[39]	R406532	R4090070[40]	N/A[53]	-	R4577503	R4577503
23-123552-004[266]	2-7/8 "	R429218X	R429218X[39]	R406532	R4090070[40]	R4111993[302]	R4122386	R4577503	R4577503
R44141858[275]	2-7/8 "	R429218X	R429218X[39]	R406532	R4090070[40]	N/A[53]	-	R458632	R458632
23-123572-004[271]	2-7/8 "	R429218X	R429218X[39]	R406532	R4090070[40]	N/A[53]	-	R4577503	R4577503
R44141858[275]	2-7/8 "	R429218X	R429218X[39]	R406532	R4090070[40]	R4111993[302]	R4122386	R458632	R458632
23-123572-004[271]	2-7/8 "	R429218X	R429218X[39]	R406532	R4090070[40]	R4111993[302]	R4122386	R458632	R458632
23-123552-004[266]	2-7/8 "	R429218X	R429218X[39]	R406532	R4090070[40]	R4111993[302]	R4122386	R458632	R458632
23-122527-002[272]	2-7/8 "	R429218X	R429218X[39]	R406532	R4090070[40]	N/A[53]	-	R4577503	R4577503
23-123552-004[266]	2-7/8 "	R429218X	R429218X[39]	R406532	R4090070[40]	R4111993[302]	R4122386	R4577503	R4577503
R44141858[275]	2-7/8 "	R429218X	R429218X[39]	R406532	R4090070[40]	R4111993[302]	R4122386	R4577503	R4577503
23-122527-002[272]	2-7/8 "	R429218X	R429218X[39]	R406532	R4090070[40]	R4111993[302]	R4122386	R4577503	R4577503
23-123572-004[271]	2-7/8 "	R429218X	R429218X[39]	R406532	R4090070[40]	R4111993[302]	R4122386	R458632	R458632
R44141858[275]	2-7/8 "	R429218X	R429218X[39]	R406532	R4090070[40]	R4111993[302]	R4122386	R458632	R458632
23-122920-002[273]	2-7/8 "	R429218X	R429218X[39]	R406532	R4090070[40]	N/A[53]	-	R458632	R458632
23-122527-002[272]	2-7/8 "	R429218X	R429218X[39]	R406532	R4090070[40]	R4111993[302]	R4122386	R458632	R458632
23-123572-004[271]	2-7/8 "	R429218X	R429218X[39]	R406532	R4090070[40]	R4111993[302]	R4122386	R4577503	R4577503
R44141858[275]	2-7/8 "	R429218X	R429218X[39]	R406532	R4090070[40]	N/A[53]	-	R458632	R458632
23-123552-004[266]	2-7/8 "	R429218X	R429218X[39]	R406532	R4090070[40]	N/A[53]	-	R458632	R458632
23-123572-004[271]	2-7/8 "	R429218X	R429218X[39]	R406532	R4090070[40]	N/A[53]	-	R458632	R458632
23-123572-004[271]	2-7/8 "	R429218X	R429218X[39]	R406532	R4090070[40]	R4111993[302]	R4122386	R4577503	R4577503
23-122527-002[272]	2-7/8 "	R429218X	R429218X[39]	R406532	R4090070[40]	N/A[53]	-	R458632	R458632
23-123552-004[266]	2-7/8 "	R429218X	R429218X[39]	R406532	R4090070[40]	N/A[53]	-	R458632	R458632
23-123552-004[266]	2-7/8 "	R429218X	R429218X[39]	R406532	R4090070[40]	N/A[53]	-	R4577503	R4577503
23-122920-002[273]	2-7/8 "	R429218X	R429218X[39]	R406532	R4090070[40]	R4111993[302]	R4122386	R4577503	R4577503
R44141476[268]	2-7/8 "	R429218X	R429218X[39]	R406532	R4090070[40]	R4111993[302]	R4122386	R458632	R458632
23-122527-002[272]	2-7/8 "	R429218X	R429218X[39]	R406532	R4090070[40]	N/A[53]	-	R4577503	R4577503
23-122527-002[272]	2-7/8 "	R429218X	R429218X[39]	R406532	R4090070[40]	N/A[53]	-	R458632	R458632
23-123552-004[266]	2-7/8 "	R429218X	R429218X[39]	R406532	R4090070[40]	N/A[53]	-	R4577503	R4577503
R44141476[268]	2-7/8 "	R429218X	R429218X[39]	R406532	R4090070[40]	R4111993[302]	R4122386	R4577503	R4577503
23-122920-002[273]	2-7/8 "	R429218X	R429218X[39]	R406532	R4090070[40]	R4111993[302]	R4122386	R4577503	R4577503
23-123552-004[266]	2-7/8 "	R429218X	R429218X[39]	R406532	R4090070[40]	N/A[53]	-	R4577503	R4577503
R44141476[268]	2-7/8 "	R429218X	R429218X[39]	R406532	R4090070[40]	R4111993[302]	R4122386	R458632	R458632
R44141476[268]	2-7/8 "	R429218X	R429218X[39]	R406532	R4090070[40]	N/A[53]	-	R4577503	R4577503
23-123572-004[271]	2-7/8 "	R429218X	R429218X[39]	R406532	R4090070[40]	R4111993[302]	R4122386	R458632	R458632
23-123552-004[266]	2-7/8 "	R429218X	R429218X[39]	R406532	R4090070[40]	R4111993[302]	R4122386	R458632	R458632
23-122527-002[272]	2-7/8 "	R429218X	R429218X[39]	R406532	R4090070[40]	R4111993[302]	R4122386	R4577503	R4577503
R44141476[268]	2-7/8 "	R429218X	R429218X[39]	R406532	R4090070[40]	R4111993[302]	R4122386	R4577503	R4577503
23-123552-004[266]	2-7/8 "	R429218X	R429218X[39]	R406532	R4090070[40]	N/A[53]	-	R458632	R458632
R44141858[275]	2-7/8 "	R429218X	R429218X[39]	R406532	R4090070[40]	R4111993[302]	R4122386	R4577503	R4577503
23-122920-002[273]	2-7/8 "	R429218X	R429218X[39]	R406532	R4090070[40]	N/A[53]	-	R4577503	R4577503
23-123572-004[271]	2-7/8 "	R429218X	R429218X[39]	R406532	R4090070[40]	N/A[53]	-	R458632	R458632
23-122527-002[272]	2-7/8 "	R429218X	R429218X[39]	R406532	R4090070[40]	N/A[53]	-	R4577503	R4577503
23-122920-002[273]	2-7/8 "	R429218X	R429218X[39]	R406532	R4090070[40]	N/A[53]	-	R4577503	R4577503
R44141476[268]	2-7/8 "	R429218X	R429218X[39]	R406532	R4090070[40]	N/A[53]	-	R458632	R458632
23-122920-002[273]	2-7/8 "	R429218X	R429218X[39]	R406532	R4090070[40]	R4111993[302]	R4122386	R458632	R458632
23-122527-002[272]	2-7/8 "	R429218X	R429218X[39]	R406532	R4090070[40]	R4111993[302]	R4122386	R4577503	R4577503
23-122920-002[273]	2-7/8 "	R429218X	R429218X[39]	R406532	R4090070[40]	N/A[53]	-	R4577503	R4577503
R44141476[268]	2-7/8 "	R429218X	R429218X[39]	R406532	R4090070[40]	N/A[53]	-	R458632	R458632
R44141858[275]	2-7/8 "	R429218X	R429218X[39]	R406532	R4090070[40]	N/A[53]	-	R4577503	R4577503
R44141858[275]	2-7/8 "	R429218X	R429218X[39]	R406532	R4090070[40]	N/A[53]	-	R458632	R458632
23-123552-004[266]	2-7/8 "	R429218X	R429218X[39]	R406532	R4090070[40]	N/A[53]	-	R4577503	R4577503

302 - Power Brakes, Dual System

MAKE MODEL YEAR AXLE CODE AXLE WEIGHT	AXLE & BRK. TYPE	BRK. MFG.	BRAKE SIZE	FMSI	MERITOR DISC PAD OR BRAKE SHOE	MERITOR GUIDE PIN OR RETURN SPRING KIT	MERITOR CALIPER HWD. KIT OR RETURN SPRING KIT	MERITOR ADJUSTER KIT (LEFT WHEEL)	MERITOR ADJUSTER KIT (RIGHT WHEEL)
ITE(Cont.)									
170, 1700, 1710, 1723, 1724, 1750, 1753, 1754 SERIES CONVENTIONAL CAB, SCHOOL BUS, TILT CAB(Cont.)									
1982									
	Fd	BX		7142 - D225	MD225	R40H5010	R40H5522	NR	NR
	Fd	BX		7142 - D225	MD225	R40H5010	R40H5522	NR	NR
	Fd	BX		7142 - D225	MD225	R40H5010	R40H5522	NR	NR
	Fd	BX		7142 - D225	MD225	R40H5010	R40H5522	NR	NR
	Fd	BX		7142 - D225	MD225	R40H5010	R40H5522	NR	NR
	Fd	BX		7142 - D225	MD225	R40H5010	R40H5522	NR	NR
	Fd	BX		7142 - D225	MD225	R40H5010	R40H5522	NR	NR
	Fd	BX		7142 - D225	MD225	R40H5010	R40H5522	NR	NR
	Fd	BX		7142 - D225	MD225	R40H5010	R40H5522	NR	NR
	Fd	BX		7142 - D225	MD225	R40H5010	R40H5522	NR	NR
	Fd	BX		7142 - D225	MD225	R40H5010	R40H5522	NR	NR
	Fd	BX		7142 - D225	MD225	R40H5010	R40H5522	NR	NR
	Fd	BX		7142 - D225	MD225	R40H5010	R40H5522	NR	NR
	Fd	BX		7142 - D225	MD225	R40H5010	R40H5522	NR	NR
	Fd	BX		7142 - D225	MD225	R40H5010	R40H5522	NR	NR
S1723, S1753 School Bus FA73	Fd	BX		7108 - D184	MD184	R40H5010	R40H5519	NR	NR
	Fd	BX		7108 - D184	MD184	R40H5010	R40H5519	NR	NR
	Fd	BX		7108 - D184	MD184	R40H5010	R40H5519	NR	NR
	Fd	BX		7108 - D184	MD184	R40H5010	R40H5519	NR	NR
	Fd	BX		7108 - D184	MD184	R40H5010	R40H5519	NR	NR
	Fd	BX		7108 - D184	MD184	R40H5010	R40H5519	NR	NR
	Fd	BX		7108 - D184	MD184	R40H5010	R40H5519	NR	NR
	Fd	BX		7108 - D184	MD184	R40H5010	R40H5519	NR	NR
S1723, S1753 School Bus RA29, 30, 42, 44	Rd	BX		7142 - D225	MD225	R40H5010	R40H5522	NR	NR
	Rd	BX		7142 - D225	MD225	R40H5010	R40H5522	NR	NR
	Rd	BX		7142 - D225	MD225	R40H5010	R40H5522	NR	NR
	Rd	BX		7108 - D184	MD184	R40H5010	R40H5519	NR	NR
	Rd	BX		7142 - D225	MD225	R40H5010	R40H5522	NR	NR
	Rd	BX		7108 - D184	MD184	R40H5010	R40H5519	NR	NR
	Rd	BX		7108 - D184	MD184	R40H5010	R40H5519	NR	NR
	Rd	BX		7142 - D225	MD225	R40H5010	R40H5522	NR	NR
	Rd	BX		7142 - D225	MD225	R40H5010	R40H5522	NR	NR
	Rd	BX		7142 - D225	MD225	R40H5010	R40H5522	NR	NR
	Rd	BX		7142 - D225	MD225	R40H5010	R40H5522	NR	NR
	Rd	BX		7108 - D184	MD184	R40H5010	R40H5519	NR	NR
	Rd	BX		7108 - D184	MD184	R40H5010	R40H5519	NR	NR
	Rd	BX		7108 - D184	MD184	R40H5010	R40H5519	NR	NR
	Rd	BX		7142 - D225	MD225	R40H5010	R40H5522	NR	NR
	Rd	BX		7142 - D225	MD225	R40H5010	R40H5522	NR	NR
	Rd	BX		7108 - D184	MD184	R40H5010	R40H5519	NR	NR
	Rd	BX		7142 - D225	MD225	R40H5010	R40H5522	NR	NR
	Rd	BX		7142 - D225	MD225	R40H5010	R40H5522	NR	NR
	Rd	BX		7142 - D225	MD225	R40H5010	R40H5522	NR	NR
	Rd	BX		7142 - D225	MD225	R40H5010	R40H5522	NR	NR
	Rd	BX		7142 - D225	MD225	R40H5010	R40H5522	NR	NR
	Rd	BX		7108 - D184	MD184	R40H5010	R40H5519	NR	NR
	Rd	BX		7108 - D184	MD184	R40H5010	R40H5519	NR	NR
	Rd	BX		7108 - D184	MD184	R40H5010	R40H5519	NR	NR
	Rd	BX		7142 - D225	MD225	R40H5010	R40H5522	NR	NR
	Rd	BX		7142 - D225	MD225	R40H5010	R40H5522	NR	NR
	Rd	BX		7142 - D225	MD225	R40H5010	R40H5522	NR	NR
	Rd	BX		7142 - D225	MD225	R40H5010	R40H5522	NR	NR
	Rd	BX		7142 - D225	MD225	R40H5010	R40H5522	NR	NR
	Rd	BX		7108 - D184	MD184	R40H5010	R40H5519	NR	NR
	Rd	BX		7142 - D225	MD225	R40H5010	R40H5522	NR	NR
	Rd	BX		7108 - D184	MD184	R40H5010	R40H5519	NR	NR
	Rd	BX		7142 - D225	MD225	R40H5010	R40H5522	NR	NR
	Rd	BX		7108 - D184	MD184	R40H5010	R40H5519	NR	NR
	Rd	BX		7142 - D225	MD225	R40H5010	R40H5522	NR	NR
	Rd	BX		7142 - D225	MD225	R40H5010	R40H5522	NR	NR
	Rd	BX		7142 - D225	MD225	R40H5010	R40H5522	NR	NR
	Rd	BX		7142 - D225	MD225	R40H5010	R40H5522	NR	NR
	Rd	BX		7108 - D184	MD184	R40H5010	R40H5519	NR	NR

37 - Also available as a New unit

38 - First design, may have external joining tube and uses steel pistons

39 - First design, uses steel pistons.

40 - For chrome plated steel version, use R4090070P

52 - 18" Length

53 - Power Brakes

201 - Steel Piston

266 - 10 Stud, Hat Shaped

267 - 10 Stud, U Shaped

MERITOR DRUM OR ROTOR NO.	CALIPER OR CYLINDER BORE SIZE	MERITOR CALIPER OR WHEEL CYLINDER (LEFT)	MERITOR CALIPER OR WHEEL CYLINDER (RIGHT)	MERITOR CALIPER OR WHEEL CYLINDER REPAIR KIT	MERITOR CALIPER PISTON	MERITOR MASTER CYLINDER	MERITOR MASTER CYLINDER KIT	MERITOR BRAKE HOSE (LEFT)	MERITOR BRAKE HOSE (RIGHT)
									ITE(Cont.)
170, 1700, 1710, 1723, 1724, 1750, 1753, 1754 SERIES CONVENTIONAL CAB, SCHOOL BUS, TILT CAB(Cont.)									
23-123552-004[266]	2-7/8 "	R429218X	R429218X[39]	R406532	R4090070[40]	R4111993[302]	R4122386	R458632	R458632
23-123572-004[271]	2-7/8 "	R429218X	R429218X[39]	R406532	R4090070[40]	R4111993[302]	R4122386	R458632	R458632
23-123572-004[271]	2-7/8 "	R429218X	R429218X[39]	R406532	R4090070[40]	R4111993[302]	R4122386	R4577503	R4577503
23-123572-004[271]	2-7/8 "	R429218X	R429218X[39]	R406532	R4090070[40]	R4111993[302]	R4122386	R4577503	R4577503
23-123552-004[266]	2-7/8 "	R429218X	R429218X[39]	R406532	R4090070[40]	N/A[53]	-	R4577503	R4577503
23-123552-004[266]	2-7/8 "	R429218X	R429218X[39]	R406532	R4090070[40]	R4111993[302]	R4122386	R458632	R458632
R44141476[268]	2-7/8 "	R429218X	R429218X[39]	R406532	R4090070[40]	N/A[53]	-	R4577503	R4577503
R44141858[275]	2-7/8 "	R429218X	R429218X[39]	R406532	R4090070[40]	N/A[53]	-	R458632	R458632
R44141476[268]	2-7/8 "	R429218X	R429218X[39]	R406532	R4090070[40]	N/A[53]	-	R458632	R458632
23-123552-004[266]	2-7/8 "	R429218X	R429218X[39]	R406532	R4090070[40]	R4111993[302]	R4122386	R4577503	R4577503
23-122920-002[273]	2-7/8 "	R429218X	R429218X[39]	R406532	R4090070[40]	R4111993[302]	R4122386	R458632	R458632
R44141858[275]	2-7/8 "	R429218X	R429218X[39]	R406532	R4090070[40]	N/A[53]	-	R4577503	R4577503
23-123572-004[271]	2-7/8 "	R429218X	R429218X[39]	R406532	R4090070[40]	R4111993[302]	R4122386	R458632	R458632
R44141858[275]	2-7/8 "	R429218X	R429218X[39]	R406532	R4090070[40]	R4111993[302]	R4122386	R4577503	R4577503
R44141476[268]	2-7/8 "	R429218X	R429218X[39]	R406532	R4090070[40]	R4111993[302]	R4122386	R458632	R458632
23-122527-002[272]	3-3/8 "	R42R55099	R42R55098[37]	R4066780	R4090021[201]	R4111993[302]	R4122386	R458632	R458632
23-122527-002[272]	3-3/8 "	R42R55099	R42R55098[37]	R4066780	R4090021[201]	N/A[53]	-	R4577503	R4577503
23-122527-002[272]	3-3/8 "	R42R55099	R42R55098[37]	R4066780	R4090021[201]	N/A[53]	-	R4577503	R4577503
23-122527-002[272]	3-3/8 "	R42R55099	R42R55098[37]	R4066780	R4090021[201]	N/A[53]	-	R458632	R458632
23-122527-002[272]	3-3/8 "	R42R55099	R42R55098[37]	R4066780	R4090021[201]	N/A[53]	-	R458632	R458632
23-122527-002[272]	3-3/8 "	R42R55099	R42R55098[37]	R4066780	R4090021[201]	R4111993[302]	R4122386	R458632	R458632
23-122527-002[272]	3-3/8 "	R42R55099	R42R55098[37]	R4066780	R4090021[201]	R4111993[302]	R4122386	R4577503	R4577503
23-122527-002[272]	3-3/8 "	R42R55099	R42R55098[37]	R4066780	R4090021[201]	R4111993[302]	R4122386	R4577503	R4577503
R44141627[270]	2-7/8 "	R429218X	R429218X[39]	R406532	R4090070[40]	-	-	R458634[52]	R458634
23-123572-004[271]	2-7/8 "	R429218X	R429218X[39]	R406532	R4090070[40]	-	-	R458634[52]	R458634
R44141608[267]	2-7/8 "	R429218X	R429218X[39]	R406532	R4090070[40]	-	-	R458634[52]	R458634
R44141627[270]	2-19/32 "	R42R55245	R42R55245[38]	R402235118	R402238231[201]	-	-	R458634[52]	R458634
R44141608[267]	2-7/8 "	R429218X	R429218X[39]	R406532	R4090070[40]	-	-	R458634[52]	R458634
23-122527-002[272]	2-19/32 "	R42R55245	R42R55245[38]	R402235118	R402238231[201]	-	-	R458634[52]	R458634
R44141629[269]	2-19/32 "	R42R55245	R42R55245[38]	R402235118	R402238231[201]	-	-	R458634[52]	R458634
R44141627[270]	2-7/8 "	R429218X	R429218X[39]	R406532	R4090070[40]	-	-	R458634[52]	R458634
R44141629[269]	2-7/8 "	R429218X	R429218X[39]	R406532	R4090070[40]	-	-	R458634[52]	R458634
R44141629[269]	2-7/8 "	R429218X	R429218X[39]	R406532	R4090070[40]	-	-	R458634[52]	R458634
R44141628[269]	2-7/8 "	R429218X	R429218X[39]	R406532	R4090070[40]	-	-	R458634[52]	R458634
R44141608[267]	2-19/32 "	R42R55245	R42R55245[38]	R402235118	R402238231[201]	-	-	R458634[52]	R458634
23-123552-004[266]	2-19/32 "	R42R55245	R42R55245[38]	R402235118	R402238231[201]	-	-	R458634[52]	R458634
23-122527-002[272]	2-19/32 "	R42R55245	R42R55245[38]	R402235118	R402238231[201]	-	-	R458634[52]	R458634
R44141629[269]	2-7/8 "	R429218X	R429218X[39]	R406532	R4090070[40]	-	-	R458634[52]	R458634
R44141627[270]	2-7/8 "	R429218X	R429218X[39]	R406532	R4090070[40]	-	-	R458634[52]	R458634
R44141629[269]	2-19/32 "	R42R55245	R42R55245[38]	R402235118	R402238231[201]	-	-	R458634[52]	R458634
R44141608[267]	2-7/8 "	R429218X	R429218X[39]	R406532	R4090070[40]	-	-	R458634[52]	R458634
R44141627[270]	2-7/8 "	R429218X	R429218X[39]	R406532	R4090070[40]	-	-	R458634[52]	R458634
R44141628[269]	2-7/8 "	R429218X	R429218X[39]	R406532	R4090070[40]	-	-	R458634[52]	R458634
23-123552-004[266]	2-7/8 "	R429218X	R429218X[39]	R406532	R4090070[40]	-	-	R458634[52]	R458634
R44141608[267]	2-19/32 "	R42R55245	R42R55245[38]	R402235118	R402238231[201]	-	-	R458634[52]	R458634
R44141629[269]	2-19/32 "	R42R55245	R42R55245[38]	R402235118	R402238231[201]	-	-	R458634[52]	R458634
R44141608[267]	2-19/32 "	R42R55245	R42R55245[38]	R402235118	R402238231[201]	-	-	R458634[52]	R458634
R44141628[269]	2-7/8 "	R429218X	R429218X[39]	R406532	R4090070[40]	-	-	R458634[52]	R458634
23-123552-004[266]	2-7/8 "	R429218X	R429218X[39]	R406532	R4090070[40]	-	-	R458634[52]	R458634
23-123572-004[271]	2-7/8 "	R429218X	R429218X[39]	R406532	R4090070[40]	-	-	R458634[52]	R458634
23-123572-004[271]	2-7/8 "	R429218X	R429218X[39]	R406532	R4090070[40]	-	-	R458634[52]	R458634
23-123552-004[266]	2-19/32 "	R42R55245	R42R55245[38]	R402235118	R402238231[201]	-	-	R458634[52]	R458634
23-123572-004[271]	2-7/8 "	R429218X	R429218X[39]	R406532	R4090070[40]	-	-	R458634[52]	R458634
23-123552-004[266]	2-19/32 "	R42R55245	R42R55245[38]	R402235118	R402238231[201]	-	-	R458634[52]	R458634
R44141628[269]	2-7/8 "	R429218X	R429218X[39]	R406532	R4090070[40]	-	-	R458634[52]	R458634
23-123572-004[271]	2-19/32 "	R42R55245	R42R55245[38]	R402235118	R402238231[201]	-	-	R458634[52]	R458634
23-122527-002[272]	2-7/8 "	R429218X	R429218X[39]	R406532	R4090070[40]	-	-	R458634[52]	R458634
R44141629[269]	2-7/8 "	R429218X	R429218X[39]	R406532	R4090070[40]	-	-	R458634[52]	R458634
23-122527-002[272]	2-7/8 "	R429218X	R429218X[39]	R406532	R4090070[40]	-	-	R458634[52]	R458634
23-123552-004[266]	2-7/8 "	R429218X	R429218X[39]	R406532	R4090070[40]	-	-	R458634[52]	R458634
23-123572-004[271]	2-19/32 "	R42R55245	R42R55245[38]	R402235118	R402238231[201]	-	-	R458634[52]	R458634

268 - 5 Stud, Hat Shape

269 - 5 Stud, U Shape

270 - 5 Stud, U Shape, .766 Dia. Studs

271 - 6 Stud, Hat Shape

272 - 6 Stud, U Shape

273 - 5 Stud, U Shape, .780 Dia. Studs

275 - 5 Stud, U Shape, .656 Dia. Studs

302 - Power Brakes, Dual System

MAKE MODEL YEAR AXLE CODE AXLE WEIGHT	AXLE & BRK. TYPE	BRK. MFG.	BRAKE SIZE	FMSI	MERITOR DISC PAD OR BRAKE SHOE	MERITOR GUIDE PIN OR RETURN SPRING KIT	MERITOR CALIPER HWD. KIT OR RETURN SPRING KIT	MERITOR ADJUSTER KIT (LEFT WHEEL)	MERITOR ADJUSTER KIT (RIGHT WHEEL)
ITE(Cont.)									
170, 1700, 1710, 1723, 1724, 1750, 1753, 1754 SERIES CONVENTIONAL CAB, SCHOOL BUS, TILT CAB(Cont.)									
1982 S1723, S1753 School Bus RA29, 30, 42, 44	Rd	BX		7108 - D184	MD184	R40H5010	R40H5519	NR	NR
	Rd	BX		7108 - D184	MD184	R40H5010	R40H5519	NR	NR
	Rd	BX		7108 - D184	MD184	R40H5010	R40H5519	NR	NR
	Rd	BX		7108 - D184	MD184	R40H5010	R40H5519	NR	NR
	Rd	BX		7142 - D225	MD225	R40H5010	R40H5522	NR	NR
	Rd	BX		7142 - D225	MD225	R40H5010	R40H5522	NR	NR
	Rd	BX		7142 - D225	MD225	R40H5010	R40H5522	NR	NR
	Rd	BX		7108 - D184	MD184	R40H5010	R40H5519	NR	NR
	Rd	BX		7142 - D225	MD225	R40H5010	R40H5522	NR	NR
	Rd	BX		7142 - D225	MD225	R40H5010	R40H5522	NR	NR
	Rd	BX		7142 - D225	MD225	R40H5010	R40H5522	NR	NR
	Rd	BX		7142 - D225	MD225	R40H5010	R40H5522	NR	NR
	Rd	BX		7108 - D184	MD184	R40H5010	R40H5519	NR	NR
	Rd	BX		7142 - D225	MD225	R40H5010	R40H5522	NR	NR
	Rd	BX		7142 - D225	MD225	R40H5010	R40H5522	NR	NR
	Rd	BX		7142 - D225	MD225	R40H5010	R40H5522	NR	NR
	Rd	BX		7142 - D225	MD225	R40H5010	R40H5522	NR	NR
	Rd	BX		7108 - D184	MD184	R40H5010	R40H5519	NR	NR
	Rd	BX		7142 - D225	MD225	R40H5010	R40H5522	NR	NR
	Rd	BX		7108 - D184	MD184	R40H5010	R40H5519	NR	NR
	Rd	BX		7142 - D225	MD225	R40H5010	R40H5522	NR	NR
	Rd	BX		7108 - D184	MD184	R40H5010	R40H5519	NR	NR
	Rd	BX		7108 - D184	MD184	R40H5010	R40H5519	NR	NR
	Rd	BX		7142 - D225	MD225	R40H5010	R40H5522	NR	NR
	Rd	BX		7142 - D225	MD225	R40H5010	R40H5522	NR	NR
	Rd	BX		7142 - D225	MD225	R40H5010	R40H5522	NR	NR
	Rd	BX		7142 - D225	MD225	R40H5010	R40H5522	NR	NR
S1724, S1754 Conventional FA109, 208	Fa	WG	15 " x 3 "	1245C - 321	R700321	R40H521	R40H9237	R40H3502	R40H3503
	Fm	WG	15 " x 3 "	1245A - 235	R700235	R40H521	R40H9201	R40H3524	R40H3524
S1724, S1754 Conventional FA118, 127, 139	Fa	WG	15 " x 5 "	1345A - 491	N/A	R40H521	R40H9237	R40H3502	R40H3503
	Fm	WG	15 " x 5 "	1345 - 490	N/A	R40H521	R40H9201	R40H3524	R40H3524
S1724, S1754 Conventional FA208	Fa	WG	15 " x 3-1/2 "	1280B - 322	R464004	R40H521	R40H9237	R40H3502	R40H3503
	Fm	WG	15 " x 3-1/2 "	1280 - 463	R700463	R40H521	R40H9201	R40H3524	R40H3524
S1724, S1754 Conventional FA48, 68, 70, 72	Fa	WG	14 " x 2-1/2 "	1294A - 325	N/A	R40H521	R40H9237	R40H3502	R40H3503
	Fm	WG	14 " x 2-1/2 "	1294 - 296	N/A	R40H521	R40H9201	R40H3524	R40H3524
S1724, S1754 Conventional FA71, 73, 101	Fa	WG	15 " x 3 "	1245C - 321	R700321	R40H521	R40H9237	R40H3502	R40H3503
	Fa	WG	15 " x 3-1/2 "	1280B - 322	R464004	R40H521	R40H9237	R40H3502	R40H3503
	Fm	WG	15 " x 3 "	1245A - 235	R700235	R40H521	R40H9201	R40H3524	R40H3524
	Fm	WG	15 " x 3-1/2 "	1280 - 463	R700463	R40H521	R40H9201	R40H3524	R40H3524
S1724, S1754 Conventional FA74	Fa	WG	15 " x 3 "	1245C - 321	R700321	R40H521	R40H9237	R40H3502	R40H3503
	Fm	WG	15 " x 3 "	1245A - 235	R700235	R40H521	R40H9201	R40H3524	R40H3524
S1724, S1754 Conventional FA78, 81	Fa	WG	15 " x 3 "	1245C - 321	R700321	R40H521	R40H9237	R40H3502	R40H3503
S1724, S1754 Conventional FA89, 91, 98	Fa	WG	15 " x 3 "	1245C - 321	R700321	R40H521	R40H9237	R40H3502	R40H3503
	Fm	WG	15 " x 3 "	1245A - 235	R700235	R40H521	R40H9201	R40H3524	R40H3524
S1724, S1754 Conventional RA184	Ra	WG	15 " x 4 "	4645A - 376	Discontinued	R40H597	R40H9200	R40H3540	R40H3541
	Rm	WG	15 " x 4 "	4645A - 376	Discontinued	R40H597	R40H9200	R40H3518	R404148
S1724, S1754 Conventional RA25, 184	Ra	WG	15 " x 5 "	1252 - 346	R700346	R40H597	R40H9200	R40H3540	R40H3541
	Rm	WG	15 " x 5 "	1252 - 346	R700346	R40H597	R40H9200	R40H3518	R404148
S1724, S1754 Conventional RA29, 30, 187	Ra	WG	15 " x 5 "	1252 - 346	R700346	R40H597	R40H9200	R40H3540	R40H3541

38 - First design, may have external joining tube and uses steel pistons
39 - First design, uses steel pistons.
40 - For chrome plated steel version, use R4090070P
52 - 18" Length
201 - Steel Piston
266 - 10 Stud, Hat Shaped
267 - 10 Stud, U Shaped
269 - 5 Stud, U Shape
270 - 5 Stud, U Shape, .766 Dia. Studs

MERITOR DRUM OR ROTOR NO.	CALIPER OR CYLINDER BORE SIZE	MERITOR CALIPER OR WHEEL CYLINDER (LEFT)	MERITOR CALIPER OR WHEEL CYLINDER (RIGHT)	MERITOR CALIPER OR WHEEL CYLINDER REPAIR KIT	MERITOR CALIPER PISTON	MERITOR MASTER CYLINDER	MERITOR MASTER CYLINDER KIT	MERITOR BRAKE HOSE (LEFT)	MERITOR BRAKE HOSE (RIGHT)
									ITE(Cont.)
170, 1700, 1710, 1723, 1724, 1750, 1753, 1754 SERIES CONVENTIONAL CAB, SCHOOL BUS, TILT CAB(Cont.)									
R44141628[269]	2-19/32 "	R42R55245	R42R55245[38]	R402235118	R402238231[201]	-	-	R458634[52]	R458634
R44141608[267]	2-19/32 "	R42R55245	R42R55245[38]	R402235118	R402238231[201]	-	-	R458634[52]	R458634
R44141628[269]	2-19/32 "	R42R55245	R42R55245[38]	R402235118	R402238231[201]	-	-	R458634[52]	R458634
R44141628[269]	2-19/32 "	R42R55245	R42R55245[38]	R402235118	R402238231[201]	-	-	R458634[52]	R458634
R44141627[270]	2-7/8 "	R429218X	R429218X[39]	R406532	R4090070[40]	-	-	R458634[52]	R458634
23-122527-002[272]	2-7/8 "	R429218X	R429218X[39]	R406532	R4090070[40]	-	-	R458634[52]	R458634
R44141628[269]	2-7/8 "	R429218X	R429218X[39]	R406532	R4090070[40]	-	-	R458634[52]	R458634
23-123572-004[271]	2-19/32 "	R42R55245	R42R55245[38]	R402235118	R402238231[201]	-	-	R458634[52]	R458634
23-123572-004[271]	2-7/8 "	R429218X	R429218X[39]	R406532	R4090070[40]	-	-	R458634[52]	R458634
23-122527-002[272]	2-7/8 "	R429218X	R429218X[39]	R406532	R4090070[40]	-	-	R458634[52]	R458634
R44141608[267]	2-7/8 "	R429218X	R429218X[39]	R406532	R4090070[40]	-	-	R458634[52]	R458634
R44141608[267]	2-7/8 "	R429218X	R429218X[39]	R406532	R4090070[40]	-	-	R458634[52]	R458634
23-123552-004[266]	2-19/32 "	R42R55245	R42R55245[38]	R402235118	R402238231[201]	-	-	R458634[52]	R458634
R44141628[269]	2-7/8 "	R429218X	R429218X[39]	R406532	R4090070[40]	-	-	R458634[52]	R458634
R44141629[269]	2-7/8 "	R429218X	R429218X[39]	R406532	R4090070[40]	-	-	R458634[52]	R458634
23-123572-004[271]	2-7/8 "	R429218X	R429218X[39]	R406532	R4090070[40]	-	-	R458634[52]	R458634
R44141627[270]	2-7/8 "	R429218X	R429218X[39]	R406532	R4090070[40]	-	-	R458634[52]	R458634
R44141629[269]	2-7/8 "	R429218X	R429218X[39]	R406532	R4090070[40]	-	-	R458634[52]	R458634
R44141627[270]	2-19/32 "	R42R55245	R42R55245[38]	R402235118	R402238231[201]	-	-	R458634[52]	R458634
R44141608[267]	2-7/8 "	R429218X	R429218X[39]	R406532	R4090070[40]	-	-	R458634[52]	R458634
23-123572-004[271]	2-19/32 "	R42R55245	R42R55245[38]	R402235118	R402238231[201]	-	-	R458634[52]	R458634
23-123552-004[266]	2-7/8 "	R429218X	R429218X[39]	R406532	R4090070[40]	-	-	R458634[52]	R458634
R44141629[269]	2-19/32 "	R42R55245	R42R55245[38]	R402235118	R402238231[201]	-	-	R458634[52]	R458634
R44141628[269]	2-19/32 "	R42R55245	R42R55245[38]	R402235118	R402238231[201]	-	-	R458634[52]	R458634
23-122527-002[272]	2-7/8 "	R429218X	R429218X[39]	R406532	R4090070[40]	-	-	R458634[52]	R458634
23-123552-004[266]	2-7/8 "	R429218X	R429218X[39]	R406532	R4090070[40]	-	-	R458634[52]	R458634
23-123552-004[266]	2-7/8 "	R429218X	R429218X[39]	R406532	R4090070[40]	-	-	R458634[52]	R458634
23-122527-002[272]	2-7/8 "	R429218X	R429218X[39]	R406532	R4090070[40]	-	-	R458634[52]	R458634
N/A	1-1/4 "	R4133581	R4133582	R4166923	NR	-	-	-	-
N/A	1-1/4 "	R4133581	R4133582	R4166923	NR	-	-	-	-
N/A		-	-	N/A	N/A	-	-	-	-
N/A		-	-	N/A	N/A	-	-	-	-
N/A	1-1/4 "	R4133581	R4133582	R4166923	NR	-	-	-	-
N/A	1-1/4 "	R4133581	R4133582	R4166923	NR	-	-	-	-
N/A	1-1/8 "	R4133714	R4133715	R4166926	NR	-	-	-	-
N/A	1-1/8 "	R4133714	R4133715	R4166926	NR	-	-	-	-
N/A	1-1/4 "	R4133581	R4133582	R4166923	NR	-	-	-	-
N/A	1-1/4 "	R4133581	R4133582	R4166923	NR	-	-	-	-
N/A	1-1/4 "	R4133581	R4133582	R4166923	NR	-	-	-	-
N/A	1-1/4 "	R4133581	R4133582	R4166923	NR	-	-	-	-
N/A	1-1/4 "	R4133581	R4133582	R4166923	NR	-	-	-	-
N/A	1-1/4 "	R4133581	R4133582	R4166923	NR	-	-	-	-
N/A	1-1/4 "	R4133581	R4133582	R4166923	NR	-	-	-	-
N/A	1-1/4 "	R4133581	R4133582	R4166923	NR	-	-	-	-
N/A	1-1/2 "	R4133580	R4133580	Discontinued	NR	-	-	-	-
N/A	1-1/2 "	R4133580	R4133580	Discontinued	NR	-	-	-	-
N/A	1-1/2 "	R4133580	R4133580	Discontinued	NR	-	-	-	-
N/A	1-1/2 "	R4133580	R4133580	Discontinued	NR	-	-	-	-
N/A	1-1/2 "	R4133580	R4133580	Discontinued	NR	-	-	-	-

271 - 6 Stud, Hat Shape

272 - 6 Stud, U Shape

MAKE MODEL YEAR AXLE CODE AXLE WEIGHT	AXLE & BRK. TYPE	BRK. MFG.	BRAKE SIZE	FMSI	MERITOR DISC PAD OR BRAKE SHOE	MERITOR GUIDE PIN OR RETURN SPRING KIT	MERITOR CALIPER HWD. KIT OR RETURN SPRING KIT	MERITOR ADJUSTER KIT (LEFT WHEEL)	MERITOR ADJUSTER KIT (RIGHT WHEEL)
ITE(Cont.)									
170, 1700, 1710, 1723, 1724, 1750, 1753, 1754 SERIES CONVENTIONAL CAB, SCHOOL BUS, TILT CAB(Cont.)									
1982									
	Rm	WG	15 " x 5 "	1252 - 346	R700346	R40H597	R40H9200	R40H3518	R404148
S1724, S1754 Conventional									
RA30, 187	Ra	WG	16 " x 5 "	1254 - 385	N/A	R40H597	R40H9200	N/A	N/A
	Rm	WG	16 " x 5 "	1254 - 385	N/A	R40H597	R40H9200	R404149	R404150
S1724, S1754 Conventional									
RA30, 39, 44, 186, 189	Ra	WG	15 " x 6 "	4596 - 381	R700381	R40H597	R40H9200	R40H3540	R40H3541
	Rm	WG	15 " x 6 "	4596 - 381	R700381	R40H597	R40H9200	R40H3518	R404148
S1724, S1754 Conventional									
RA39, 199	Ra	WG	15 " x 7 "	4597 - 383	R700383	R40H597	R40H9200	R40H3540	R40H3541
	Rm	WG	15 " x 7 "	4597 - 383	R700383	R40H597	R40H9200	R40H3518	R404148
S1724, S1754 Conventional									
RA44, 186	Ra	WG	15 " x 7 "	4597 - 383	R700383	R40H597	R40H9200	N/A	N/A
	Rm	WG	15 " x 7 "	4597 - 383	R700383	R40H597	R40H9200	R40H3518	R404148
S1724, S1754 Conventional									
RA47, 57	Ra	WG	16 " x 6 "	1255 - 386	N/A	R40H597	R40H9200	N/A	N/A
	Rm	WG	16 " x 6 "	1255 - 386	N/A	R40H597	R40H9200	R404149	R404150
1981									
C1710, C1750 Cargostar Tilt Cab									
FA109, 208	Fa	WG	15 " x 3 "	1245C - 321	R700321	R40H521	R40H9237	R40H3502	R40H3503
	Fm	WG	15 " x 3 "	1245A - 235	R700235	R40H521	R40H9201	R40H3524	R40H3524
C1710, C1750 Cargostar Tilt Cab									
FA118, 127, 139	Fa	WG	15 " x 5 "	1345A - 491	N/A	R40H521	R40H9237	R40H3502	R40H3503
	Fm	WG	15 " x 5 "	1345 - 490	N/A	R40H521	R40H9201	R40H3524	R40H3524
C1710, C1750 Cargostar Tilt Cab									
FA208	Fa	WG	15 " x 3-1/2 "	1280B - 322	R464004	R40H521	R40H9237	R40H3502	R40H3503
	Fm	WG	15 " x 3-1/2 "	1280 - 463	R700463	R40H521	R40H9201	R40H3524	R40H3524
C1710, C1750 Cargostar Tilt Cab									
FA48, 68, 70, 72	Fa	WG	14 " x 2-1/2 "	1294A - 325	N/A	R40H521	R40H9237	R40H3502	R40H3503
	Fm	WG	14 " x 2-1/2 "	1294 - 296	N/A	R40H521	R40H9201	R40H3524	R40H3524
C1710, C1750 Cargostar Tilt Cab									
FA71, 73, 101	Fa	WG	15 " x 3 "	1245C - 321	R700321	R40H521	R40H9237	R40H3502	R40H3503
	Fa	WG	15 " x 3-1/2 "	1280B - 322	R464004	R40H521	R40H9237	R40H3502	R40H3503
	Fm	WG	15 " x 3 "	1245A - 235	R700235	R40H521	R40H9201	R40H3524	R40H3524
	Fm	WG	15 " x 3-1/2 "	1280 - 463	R700463	R40H521	R40H9201	R40H3524	R40H3524
C1710, C1750 Cargostar Tilt Cab									
FA74	Fa	WG	15 " x 3 "	1245C - 321	R700321	R40H521	R40H9237	R40H3502	R40H3503
	Fm	WG	15 " x 3 "	1245A - 235	R700235	R40H521	R40H9201	R40H3524	R40H3524
C1710, C1750 Cargostar Tilt Cab									
FA78, 81	Fa	WG	15 " x 3 "	1245C - 321	R700321	R40H521	R40H9237	R40H3502	R40H3503
C1710, C1750 Cargostar Tilt Cab									
FA89, 91, 98	Fa	WG	15 " x 3 "	1245C - 321	R700321	R40H521	R40H9237	R40H3502	R40H3503
	Fm	WG	15 " x 3 "	1245A - 235	R700235	R40H521	R40H9201	R40H3524	R40H3524
C1710, C1750 Cargostar Tilt Cab									
RA184	Ra	WG	15 " x 4 "	4645A - 376	Discontinued	R40H597	R40H9200	R40H3540	R40H3541
	Rm	WG	15 " x 4 "	4645A - 376	Discontinued	R40H597	R40H9200	R40H3518	R404148
C1710, C1750 Cargostar Tilt Cab									
RA25, 184	Ra	WG	15 " x 5 "	1252 - 346	R700346	R40H597	R40H9200	R40H3540	R40H3541
	Rm	WG	15 " x 5 "	1252 - 346	R700346	R40H597	R40H9200	R40H3518	R404148
C1710, C1750 Cargostar Tilt Cab									
RA29, 30, 187	Ra	WG	15 " x 5 "	1252 - 346	R700346	R40H597	R40H9200	R40H3540	R40H3541

MERITOR DRUM OR ROTOR NO.	CALIPER OR CYLINDER BORE SIZE	MERITOR CALIPER OR WHEEL CYLINDER (LEFT)	MERITOR CALIPER OR WHEEL CYLINDER (RIGHT)	MERITOR CALIPER OR WHEEL CYLINDER REPAIR KIT	MERITOR CALIPER PISTON	MERITOR MASTER CYLINDER	MERITOR MASTER CYLINDER KIT	MERITOR BRAKE HOSE (LEFT)	MERITOR BRAKE HOSE (RIGHT)
									ITE(Cont.)
170, 1700, 1710, 1723, 1724, 1750, 1753, 1754 SERIES CONVENTIONAL CAB, SCHOOL BUS, TILT CAB(Cont.)									
N/A	1-1/2 "	R4133580	R4133580	Discontinued	NR	-	-	-	-
N/A	1-5/8 "	R4133338	R4133338	R4166689	NR	-	-	-	-
N/A	1-5/8 "	R4133338	R4133338	R4166689	NR	-	-	-	-
N/A	1-5/8 "	R4133338	R4133338	R4166689	NR	-	-	-	-
N/A	1-5/8 "	R4133338	R4133338	R4166689	NR	-	-	-	-
N/A	1-5/8 "	R4133338	R4133338	R4166689	NR	-	-	-	-
N/A	1-5/8 "	R4133338	R4133338	R4166689	NR	-	-	-	-
N/A	1-5/8 "	R4133338	R4133338	R4166689	NR	-	-	-	-
N/A	1-3/4 "	R4133400	R4133400	R4166917	NR	-	-	-	-
N/A	1-3/4 "	R4133400	R4133400	R4166917	NR	-	-	-	-
N/A	1-1/4 "	R4133581	R4133582	R4166923	NR	-	-	-	-
N/A	1-1/4 "	R4133581	R4133582	R4166923	NR	-	-	-	-
N/A		-	-	N/A	N/A	-	-	-	-
N/A		-	-	N/A	N/A	-	-	-	-
N/A	1-1/4 "	R4133581	R4133582	R4166923	NR	-	-	-	-
N/A	1-1/4 "	R4133581	R4133582	R4166923	NR	-	-	-	-
N/A	1-1/8 "	R4133714	R4133715	R4166926	NR	-	-	-	-
N/A	1-1/8 "	R4133714	R4133715	R4166926	NR	-	-	-	-
N/A	1-1/4 "	R4133581	R4133582	R4166923	NR	-	-	-	-
N/A	1-1/4 "	R4133581	R4133582	R4166923	NR	-	-	-	-
N/A	1-1/4 "	R4133581	R4133582	R4166923	NR	-	-	-	-
N/A	1-1/4 "	R4133581	R4133582	R4166923	NR	-	-	-	-
N/A	1-1/4 "	R4133581	R4133582	R4166923	NR	-	-	-	-
N/A	1-1/4 "	R4133581	R4133582	R4166923	NR	-	-	-	-
N/A	1-1/4 "	R4133581	R4133582	R4166923	NR	-	-	-	-
N/A	1-1/4 "	R4133581	R4133582	R4166923	NR	-	-	-	-
N/A	1-1/2 "	R4133580	R4133580	Discontinued	NR	-	-	-	-
N/A	1-1/2 "	R4133580	R4133580	Discontinued	NR	-	-	-	-
N/A	1-1/2 "	R4133580	R4133580	Discontinued	NR	-	-	-	-
N/A	1-1/2 "	R4133580	R4133580	Discontinued	NR	-	-	-	-
N/A	1-1/2 "	R4133580	R4133580	Discontinued	NR	-	-	-	-

MAKE MODEL YEAR AXLE CODE AXLE WEIGHT	AXLE & BRK. TYPE	BRK. MFG.	BRAKE SIZE	FMSI	MERITOR DISC PAD OR BRAKE SHOE	MERITOR GUIDE PIN OR RETURN SPRING KIT	MERITOR CALIPER HWD. KIT OR RETURN SPRING KIT	MERITOR ADJUSTER KIT (LEFT WHEEL)	MERITOR ADJUSTER KIT (RIGHT WHEEL)
ITE(Cont.)									
170, 1700, 1710, 1723, 1724, 1750, 1753, 1754 SERIES CONVENTIONAL CAB, SCHOOL BUS, TILT CAB(Cont.)									
1981	Rm	WG	15 " x 5 "	1252 - 346	R700346	R40H597	R40H9200	R40H3518	R404148
C1710, C1750 Cargostar Tilt Cab RA30, 187	Ra	WG	16 " x 5 "	1254 - 385	N/A	R40H597	R40H9200	N/A	N/A
	Rm	WG	16 " x 5 "	1254 - 385	N/A	R40H597	R40H9200	R404149	R404150
C1710, C1750 Cargostar Tilt Cab RA30, 39, 44, 186, 189	Ra	WG	15 " x 6 "	4596 - 381	R700381	R40H597	R40H9200	R40H3540	R40H3541
	Rm	WG	15 " x 6 "	4596 - 381	R700381	R40H597	R40H9200	R40H3518	R404148
C1710, C1750 Cargostar Tilt Cab RA39, 199	Ra	WG	15 " x 7 "	4597 - 383	R700383	R40H597	R40H9200	R40H3540	R40H3541
	Rm	WG	15 " x 7 "	4597 - 383	R700383	R40H597	R40H9200	R40H3518	R404148
C1710, C1750 Cargostar Tilt Cab RA44, 186	Ra	WG	15 " x 7 "	4597 - 383	R700383	R40H597	R40H9200	N/A	N/A
	Rm	WG	15 " x 7 "	4597 - 383	R700383	R40H597	R40H9200	R40H3518	R404148
C1710, C1750 Cargostar Tilt Cab RA47, 57	Ra	WG	16 " x 6 "	1255 - 386	N/A	R40H597	R40H9200	N/A	N/A
	Rm	WG	16 " x 6 "	1255 - 386	N/A	R40H597	R40H9200	R404149	R404150
S1723, S1753 School Bus	Fd	BX		7108 - D184	MD184	R40H5010	R40H5519	NR	NR
	Fd	BX		7108 - D184	MD184	R40H5010	R40H5519	NR	NR
	Fd	BX		7108 - D184	MD184	R40H5010	R40H5519	NR	NR
	Fd	BX		7108 - D184	MD184	R40H5010	R40H5519	NR	NR
	Fd	BX		7108 - D184	MD184	R40H5010	R40H5519	NR	NR
	Fd	BX		7108 - D184	MD184	R40H5010	R40H5519	NR	NR
	Fd	BX		7108 - D184	MD184	R40H5010	R40H5519	NR	NR
	Fd	BX		7108 - D184	MD184	R40H5010	R40H5519	NR	NR
	Fd	BX		7108 - D184	MD184	R40H5010	R40H5519	NR	NR
	Fd	BX		7108 - D184	MD184	R40H5010	R40H5519	NR	NR
	Fd	BX		7108 - D184	MD184	R40H5010	R40H5519	NR	NR
	Fd	BX		7108 - D184	MD184	R40H5010	R40H5519	NR	NR
	Fd	BX		7108 - D184	MD184	R40H5010	R40H5519	NR	NR
	Fd	BX		7108 - D184	MD184	R40H5010	R40H5519	NR	NR
	Fd	BX		7108 - D184	MD184	R40H5010	R40H5519	NR	NR
	Fd	BX		7108 - D184	MD184	R40H5010	R40H5519	NR	NR
	Fd	BX		7108 - D184	MD184	R40H5010	R40H5519	NR	NR
	Fd	BX		7108 - D184	MD184	R40H5010	R40H5519	NR	NR
	Fd	BX		7108 - D184	MD184	R40H5010	R40H5519	NR	NR
	Fd	BX		7108 - D184	MD184	R40H5010	R40H5519	NR	NR
	Fd	BX		7108 - D184	MD184	R40H5010	R40H5519	NR	NR
	Fd	BX		7108 - D184	MD184	R40H5010	R40H5519	NR	NR
	Fd	BX		7108 - D184	MD184	R40H5010	R40H5519	NR	NR
	Fd	BX		7108 - D184	MD184	R40H5010	R40H5519	NR	NR
	Fd	BX		7108 - D184	MD184	R40H5010	R40H5519	NR	NR
	Fd	BX		7108 - D184	MD184	R40H5010	R40H5519	NR	NR
	Fd	BX		7108 - D184	MD184	R40H5010	R40H5519	NR	NR
	Fd	BX		7108 - D184	MD184	R40H5010	R40H5519	NR	NR
	Fd	BX		7108 - D184	MD184	R40H5010	R40H5519	NR	NR
	Fd	BX		7108 - D184	MD184	R40H5010	R40H5519	NR	NR
	Fd	BX		7108 - D184	MD184	R40H5010	R40H5519	NR	NR
	Fd	BX		7108 - D184	MD184	R40H5010	R40H5519	NR	NR
	Fd	BX		7108 - D184	MD184	R40H5010	R40H5519	NR	NR
	Fd	BX		7108 - D184	MD184	R40H5010	R40H5519	NR	NR
	Fd	BX		7108 - D184	MD184	R40H5010	R40H5519	NR	NR
	Fd	BX		7108 - D184	MD184	R40H5010	R40H5519	NR	NR
	Fd	BX		7108 - D184	MD184	R40H5010	R40H5519	NR	NR
	Fd	BX		7108 - D184	MD184	R40H5010	R40H5519	NR	NR
	Fd	BX		7108 - D184	MD184	R40H5010	R40H5519	NR	NR
	Fd	BX		7108 - D184	MD184	R40H5010	R40H5519	NR	NR
	Fd	BX		7108 - D184	MD184	R40H5010	R40H5519	NR	NR
	Fd	BX		7108 - D184	MD184	R40H5010	R40H5519	NR	NR
	Fd	BX		7108 - D184	MD184	R40H5010	R40H5519	NR	NR
	Fd	BX		7108 - D184	MD184	R40H5010	R40H5519	NR	NR
	Fd	BX		7108 - D184	MD184	R40H5010	R40H5519	NR	NR
	Fd	BX		7108 - D184	MD184	R40H5010	R40H5519	NR	NR
	Fd	BX		7108 - D184	MD184	R40H5010	R40H5519	NR	NR
	Fd	BX		7108 - D184	MD184	R40H5010	R40H5519	NR	NR
	Fd	BX		7108 - D184	MD184	R40H5010	R40H5519	NR	NR
	Fd	BX		7108 - D184	MD184	R40H5010	R40H5519	NR	NR
	Fd	BX		7108 - D184	MD184	R40H5010	R40H5519	NR	NR
	Fd	BX		7108 - D184	MD184	R40H5010	R40H5519	NR	NR
	Fd	BX		7108 - D184	MD184	R40H5010	R40H5519	NR	NR
	Fd	BX		7108 - D184	MD184	R40H5010	R40H5519	NR	NR
	Fd	BX		7108 - D184	MD184	R40H5010	R40H5519	NR	NR
	Fd	BX		7108 - D184	MD184	R40H5010	R40H5519	NR	NR
	Fd	BX		7108 - D184	MD184	R40H5010	R40H5519	NR	NR
	Fd	BX		7108 - D184	MD184	R40H5010	R40H5519	NR	NR
	Fd	BX		7108 - D184	MD184	R40H5010	R40H5519	NR	NR
	Fd	BX		7108 - D184	MD184	R40H5010	R40H5519	NR	NR
	Fd	BX		7108 - D184	MD184	R40H5010	R40H5519	NR	NR
	Fd	BX		7108 - D184	MD184	R40H5010	R40H5519	NR	NR
	Fd	BX		7108 - D184	MD184	R40H5010	R40H5519	NR	NR
	Fd	BX		7108 - D184	MD184	R40H5010	R40H5519	NR	NR
	Fd	BX		7108 - D184	MD184	R40H5010	R40H5519	NR	NR
	Fd	BX		7108 - D184	MD184	R40H5010	R40H5519	NR	NR
	Fd	BX		7108 - D184	MD184	R40H5010	R40H5519	NR	NR
S1723, S1753 School Bus FA101	Fd	BX		7108 - D184	MD184	R40H5010	R40H5519	NR	NR

37 - Also available as a New unit

38 - First design, may have external joining tube and uses steel pistons

53 - Power Brakes

201 - Steel Piston

266 - 10 Stud, Hat Shaped

268 - 5 Stud, Hat Shape

271 - 6 Stud, Hat Shape

272 - 6 Stud, U Shape

273 - 5 Stud, U Shape, .780 Dia. Studs

MERITOR DRUM OR ROTOR NO.	CALIPER OR CYLINDER BORE SIZE	MERITOR CALIPER OR WHEEL CYLINDER (LEFT)	MERITOR CALIPER OR WHEEL CYLINDER (RIGHT)	MERITOR CALIPER OR WHEEL CYLINDER REPAIR KIT	MERITOR CALIPER PISTON	MERITOR MASTER CYLINDER	MERITOR MASTER CYLINDER KIT	MERITOR BRAKE HOSE (LEFT)	MERITOR BRAKE HOSE (RIGHT)
									ITE(Cont.)
170, 1700, 1710, 1723, 1724, 1750, 1753, 1754 SERIES CONVENTIONAL CAB, SCHOOL BUS, TILT CAB(Cont.)									
N/A	1-1/2 "	R4133580	R4133580	Discontinued	NR	-	-	-	-
N/A	1-5/8 "	R4133338	R4133338	R4166689	NR	-	-	-	-
N/A	1-5/8 "	R4133338	R4133338	R4166689	NR	-	-	-	-
N/A	1-5/8 "	R4133338	R4133338	R4166689	NR	-	-	-	-
N/A	1-5/8 "	R4133338	R4133338	R4166689	NR	-	-	-	-
N/A	1-5/8 "	R4133338	R4133338	R4166689	NR	-	-	-	-
N/A	1-5/8 "	R4133338	R4133338	R4166689	NR	-	-	-	-
N/A	1-5/8 "	R4133338	R4133338	R4166689	NR	-	-	-	-
N/A	1-3/4 "	R4133400	R4133400	R4166917	NR	-	-	-	-
N/A	1-3/4 "	R4133400	R4133400	R4166917	NR	-	-	-	-
23-123572-004[271]	3-3/8 "	R42R55099	R42R55098[37]	R4066780	R4090021[201]	R4111993[302]	R4122386	R4577503	R4577503
R44141858[275]	3-3/8 "	R42R55099	R42R55098[37]	R4066780	R4090021[201]	R4111993[302]	R4122386	R458632	R458632
23-123552-004[266]	3-3/8 "	R42R55099	R42R55098[37]	R4066780	R4090021[201]	N/A[53]	-	R4577503	R4577503
23-122920-002[273]	3-3/8 "	R42R55099	R42R55098[37]	R4066780	R4090021[201]	R4111993[302]	R4122386	R4577503	R4577503
R44141476[268]	3-3/8 "	R42R55099	R42R55098[37]	R4066780	R4090021[201]	N/A[53]	-	R458632	R458632
23-123552-004[266]	3-3/8 "	R42R55099	R42R55098[37]	R4066780	R4090021[201]	N/A[53]	-	R4577503	R4577503
R44141858[275]	3-3/8 "	R42R55099	R42R55098[37]	R4066780	R4090021[201]	R4111993[302]	R4122386	R458632	R458632
R44141476[268]	3-3/8 "	R42R55099	R42R55098[37]	R4066780	R4090021[201]	N/A[53]	-	R4577503	R4577503
23-123572-004[271]	3-3/8 "	R42R55099	R42R55098[37]	R4066780	R4090021[201]	N/A[53]	-	R458632	R458632
R44141476[268]	3-3/8 "	R42R55099	R42R55098[37]	R4066780	R4090021[201]	R4111993[302]	R4122386	R458632	R458632
R44141476[268]	3-3/8 "	R42R55099	R42R55098[37]	R4066780	R4090021[201]	R4111993[302]	R4122386	R458632	R458632
R44141858[275]	3-3/8 "	R42R55099	R42R55098[37]	R4066780	R4090021[201]	N/A[53]	-	R4577503	R4577503
23-123552-004[266]	3-3/8 "	R42R55099	R42R55098[37]	R4066780	R4090021[201]	N/A[53]	-	R458632	R458632
R44141858[275]	3-3/8 "	R42R55099	R42R55098[37]	R4066780	R4090021[201]	R4111993[302]	R4122386	R4577503	R4577503
23-123552-004[266]	3-3/8 "	R42R55099	R42R55098[37]	R4066780	R4090021[201]	R4111993[302]	R4122386	R458632	R458632
23-122920-002[273]	3-3/8 "	R42R55099	R42R55098[37]	R4066780	R4090021[201]	R4111993[302]	R4122386	R458632	R458632
23-122920-002[273]	3-3/8 "	R42R55099	R42R55098[37]	R4066780	R4090021[201]	R4111993[302]	R4122386	R4577503	R4577503
R44141476[268]	3-3/8 "	R42R55099	R42R55098[37]	R4066780	R4090021[201]	N/A[53]	-	R458632	R458632
R44141476[268]	3-3/8 "	R42R55099	R42R55098[37]	R4066780	R4090021[201]	R4111993[302]	R4122386	R4577503	R4577503
23-122920-002[273]	3-3/8 "	R42R55099	R42R55098[37]	R4066780	R4090021[201]	N/A[53]	-	R458632	R458632
23-122920-002[273]	3-3/8 "	R42R55099	R42R55098[37]	R4066780	R4090021[201]	N/A[53]	-	R458632	R458632
R44141858[275]	3-3/8 "	R42R55099	R42R55098[37]	R4066780	R4090021[201]	N/A[53]	-	R4577503	R4577503
23-122920-002[273]	3-3/8 "	R42R55099	R42R55098[37]	R4066780	R4090021[201]	N/A[53]	-	R4577503	R4577503
23-123552-004[266]	3-3/8 "	R42R55099	R42R55098[37]	R4066780	R4090021[201]	N/A[53]	-	R458632	R458632
R44141476[268]	3-3/8 "	R42R55099	R42R55098[37]	R4066780	R4090021[201]	N/A[53]	-	R4577503	R4577503
23-123572-004[271]	3-3/8 "	R42R55099	R42R55098[37]	R4066780	R4090021[201]	N/A[53]	-	R4577503	R4577503
23-123552-004[266]	3-3/8 "	R42R55099	R42R55098[37]	R4066780	R4090021[201]	R4111993[302]	R4122386	R4577503	R4577503
23-123572-004[271]	3-3/8 "	R42R55099	R42R55098[37]	R4066780	R4090021[201]	R4111993[302]	R4122386	R4577503	R4577503
23-122920-002[273]	3-3/8 "	R42R55099	R42R55098[37]	R4066780	R4090021[201]	N/A[53]	-	R4577503	R4577503
R44141858[275]	3-3/8 "	R42R55099	R42R55098[37]	R4066780	R4090021[201]	N/A[53]	-	R458632	R458632
23-123572-004[271]	3-3/8 "	R42R55099	R42R55098[37]	R4066780	R4090021[201]	R4111993[302]	R4122386	R458632	R458632
R44141476[268]	3-3/8 "	R42R55099	R42R55098[37]	R4066780	R4090021[201]	R4111993[302]	R4122386	R4577503	R4577503
23-123572-004[271]	3-3/8 "	R42R55099	R42R55098[37]	R4066780	R4090021[201]	N/A[53]	-	R4577503	R4577503
23-123552-004[266]	3-3/8 "	R42R55099	R42R55098[37]	R4066780	R4090021[201]	R4111993[302]	R4122386	R4577503	R4577503
R44141858[275]	3-3/8 "	R42R55099	R42R55098[37]	R4066780	R4090021[201]	R4111993[302]	R4122386	R4577503	R4577503
23-123572-004[271]	3-3/8 "	R42R55099	R42R55098[37]	R4066780	R4090021[201]	R4111993[302]	R4122386	R458632	R458632
23-123552-004[266]	3-3/8 "	R42R55099	R42R55098[37]	R4066780	R4090021[201]	R4111993[302]	R4122386	R458632	R458632
23-123572-004[271]	3-3/8 "	R42R55099	R42R55098[37]	R4066780	R4090021[201]	N/A[53]	-	R458632	R458632
23-122920-002[273]	3-3/8 "	R42R55099	R42R55098[37]	R4066780	R4090021[201]	R4111993[302]	R4122386	R458632	R458632
R44141858[275]	3-3/8 "	R42R55099	R42R55098[37]	R4066780	R4090021[201]	N/A[53]	-	R458632	R458632
23-122527-002[272]	2-19/32 "	R42R55245	R42R55245[38]	R402235118	R402238231[201]	R4111993[302]	R4122386	R458632	R458632

275 - 5 Stud, U Shape, .656 Dia. Studs

302 - Power Brakes, Dual System

MAKE MODEL YEAR AXLE CODE AXLE WEIGHT	AXLE & BRK. TYPE	BRK. MFG.	BRAKE SIZE	FMSI	MERITOR DISC PAD OR BRAKE SHOE	MERITOR GUIDE PIN OR RETURN SPRING KIT	MERITOR CALIPER HWD. KIT OR RETURN SPRING KIT	MERITOR ADJUSTER KIT (LEFT WHEEL)	MERITOR ADJUSTER KIT (RIGHT WHEEL)
ITE(Cont.)									
170, 1700, 1710, 1723, 1724, 1750, 1753, 1754 SERIES CONVENTIONAL CAB, SCHOOL BUS, TILT CAB(Cont.)									
1981									
	Fd	BX		7108 - D184	MD184	R40H5010	R40H5519	NR	NR
	Fd	BX		7108 - D184	MD184	R40H5010	R40H5519	NR	NR
	Fd	BX		7108 - D184	MD184	R40H5010	R40H5519	NR	NR
	Fd	BX		7108 - D184	MD184	R40H5010	R40H5519	NR	NR
	Fd	BX		7108 - D184	MD184	R40H5010	R40H5519	NR	NR
	Fd	BX		7108 - D184	MD184	R40H5010	R40H5519	NR	NR
	Fd	BX		7108 - D184	MD184	R40H5010	R40H5519	NR	NR
	Fd	BX		7108 - D184	MD184	R40H5010	R40H5519	NR	NR
	Fd	BX		7108 - D184	MD184	R40H5010	R40H5519	NR	NR
	Fd	BX		7108 - D184	MD184	R40H5010	R40H5519	NR	NR
	Fd	BX		7108 - D184	MD184	R40H5010	R40H5519	NR	NR
	Fd	BX		7108 - D184	MD184	R40H5010	R40H5519	NR	NR
	Fd	BX		7108 - D184	MD184	R40H5010	R40H5519	NR	NR
	Fd	BX		7108 - D184	MD184	R40H5010	R40H5519	NR	NR
	Fd	BX		7108 - D184	MD184	R40H5010	R40H5519	NR	NR
	Fd	BX		7108 - D184	MD184	R40H5010	R40H5519	NR	NR
	Fd	BX		7108 - D184	MD184	R40H5010	R40H5519	NR	NR
	Fd	BX		7108 - D184	MD184	R40H5010	R40H5519	NR	NR
	Fd	BX		7108 - D184	MD184	R40H5010	R40H5519	NR	NR
	Fd	BX		7108 - D184	MD184	R40H5010	R40H5519	NR	NR
	Fd	BX		7108 - D184	MD184	R40H5010	R40H5519	NR	NR
	Fd	BX		7108 - D184	MD184	R40H5010	R40H5519	NR	NR
	Fd	BX		7108 - D184	MD184	R40H5010	R40H5519	NR	NR
S1723, S1753 School Bus									
FA309, 329, 339	Fd	BX		7142 - D225	MD225	R40H5010	R40H5522	NR	NR
	Fd	BX		7142 - D225	MD225	R40H5010	R40H5522	NR	NR
	Fd	BX		7142 - D225	MD225	R40H5010	R40H5522	NR	NR
	Fd	BX		7142 - D225	MD225	R40H5010	R40H5522	NR	NR
	Fd	BX		7142 - D225	MD225	R40H5010	R40H5522	NR	NR
	Fd	BX		7142 - D225	MD225	R40H5010	R40H5522	NR	NR
	Fd	BX		7142 - D225	MD225	R40H5010	R40H5522	NR	NR
	Fd	BX		7142 - D225	MD225	R40H5010	R40H5522	NR	NR
	Fd	BX		7142 - D225	MD225	R40H5010	R40H5522	NR	NR
	Fd	BX		7142 - D225	MD225	R40H5010	R40H5522	NR	NR
	Fd	BX		7142 - D225	MD225	R40H5010	R40H5522	NR	NR
	Fd	BX		7142 - D225	MD225	R40H5010	R40H5522	NR	NR
	Fd	BX		7142 - D225	MD225	R40H5010	R40H5522	NR	NR
	Fd	BX		7142 - D225	MD225	R40H5010	R40H5522	NR	NR
	Fd	BX		7142 - D225	MD225	R40H5010	R40H5522	NR	NR
	Fd	BX		7142 - D225	MD225	R40H5010	R40H5522	NR	NR
	Fd	BX		7142 - D225	MD225	R40H5010	R40H5522	NR	NR
	Fd	BX		7142 - D225	MD225	R40H5010	R40H5522	NR	NR
	Fd	BX		7142 - D225	MD225	R40H5010	R40H5522	NR	NR
	Fd	BX		7142 - D225	MD225	R40H5010	R40H5522	NR	NR
	Fd	BX		7142 - D225	MD225	R40H5010	R40H5522	NR	NR
	Fd	BX		7142 - D225	MD225	R40H5010	R40H5522	NR	NR
	Fd	BX		7142 - D225	MD225	R40H5010	R40H5522	NR	NR
	Fd	BX		7142 - D225	MD225	R40H5010	R40H5522	NR	NR
	Fd	BX		7142 - D225	MD225	R40H5010	R40H5522	NR	NR
	Fd	BX		7142 - D225	MD225	R40H5010	R40H5522	NR	NR
	Fd	BX		7142 - D225	MD225	R40H5010	R40H5522	NR	NR
	Fd	BX		7142 - D225	MD225	R40H5010	R40H5522	NR	NR
	Fd	BX		7142 - D225	MD225	R40H5010	R40H5522	NR	NR
	Fd	BX		7142 - D225	MD225	R40H5010	R40H5522	NR	NR
	Fd	BX		7142 - D225	MD225	R40H5010	R40H5522	NR	NR
	Fd	BX		7142 - D225	MD225	R40H5010	R40H5522	NR	NR
	Fd	BX		7142 - D225	MD225	R40H5010	R40H5522	NR	NR
	Fd	BX		7142 - D225	MD225	R40H5010	R40H5522	NR	NR
	Fd	BX		7142 - D225	MD225	R40H5010	R40H5522	NR	NR
	Fd	BX		7142 - D225	MD225	R40H5010	R40H5522	NR	NR
	Fd	BX		7142 - D225	MD225	R40H5010	R40H5522	NR	NR
	Fd	BX		7142 - D225	MD225	R40H5010	R40H5522	NR	NR
	Fd	BX		7142 - D225	MD225	R40H5010	R40H5522	NR	NR

38 - First design, may have external joining tube and uses steel pistons
39 - First design, uses steel pistons.
40 - For chrome plated steel version, use R4090070P
53 - Power Brakes
201 - Steel Piston
266 - 10 Stud, Hat Shaped
268 - 5 Stud, Hat Shape
271 - 6 Stud, Hat Shape
272 - 6 Stud, U Shape

MERITOR DRUM OR ROTOR NO.	CALIPER OR CYLINDER BORE SIZE	MERITOR CALIPER OR WHEEL CYLINDER (LEFT)	MERITOR CALIPER OR WHEEL CYLINDER (RIGHT)	MERITOR CALIPER OR WHEEL CYLINDER REPAIR KIT	MERITOR CALIPER PISTON	MERITOR MASTER CYLINDER	MERITOR MASTER CYLINDER KIT	MERITOR BRAKE HOSE (LEFT)	MERITOR BRAKE HOSE (RIGHT)
									ITE(Cont.)
170, 1700, 1710, 1723, 1724, 1750, 1753, 1754 SERIES CONVENTIONAL CAB, SCHOOL BUS, TILT CAB(Cont.)									
23-123572-004[271]	2-19/32 "	R42R55245	R42R55245[38]	R402235118	R402238231[201]	R4111993[302]	R4122386	R4577503	R4577503
R44141858[275]	2-19/32 "	R42R55245	R42R55245[38]	R402235118	R402238231[201]	N/A[53]	-	R4577503	R4577503
23-123552-004[266]	2-19/32 "	R42R55245	R42R55245[38]	R402235118	R402238231[201]	N/A[53]	-	R458632	R458632
23-122527-002[272]	2-19/32 "	R42R55245	R42R55245[38]	R402235118	R402238231[201]	N/A[53]	-	R4577503	R4577503
23-122920-002[273]	2-19/32 "	R42R55245	R42R55245[38]	R402235118	R402238231[201]	R4111993[302]	R4122386	R458632	R458632
23-123552-004[266]	2-19/32 "	R42R55245	R42R55245[38]	R402235118	R402238231[201]	N/A[53]	-	R4577503	R4577503
R44141858[275]	2-19/32 "	R42R55245	R42R55245[38]	R402235118	R402238231[201]	N/A[53]	-	R458632	R458632
23-123572-004[271]	2-19/32 "	R42R55245	R42R55245[38]	R402235118	R402238231[201]	N/A[53]	-	R4577503	R4577503
23-123572-004[271]	2-19/32 "	R42R55245	R42R55245[38]	R402235118	R402238231[201]	R4111993[302]	R4122386	R458632	R458632
23-123552-004[266]	2-19/32 "	R42R55245	R42R55245[38]	R402235118	R402238231[201]	R4111993[302]	R4122386	R4577503	R4577503
23-122920-002[273]	2-19/32 "	R42R55245	R42R55245[38]	R402235118	R402238231[201]	N/A[53]	-	R458632	R458632
R44141476[268]	2-19/32 "	R42R55245	R42R55245[38]	R402235118	R402238231[201]	R4111993[302]	R4122386	R4577503	R4577503
23-122527-002[272]	2-19/32 "	R42R55245	R42R55245[38]	R402235118	R402238231[201]	R4111993[302]	R4122386	R4577503	R4577503
R44141476[268]	2-19/32 "	R42R55245	R42R55245[38]	R402235118	R402238231[201]	N/A[53]	-	R4577503	R4577503
23-122920-002[273]	2-19/32 "	R42R55245	R42R55245[38]	R402235118	R402238231[201]	R4111993[302]	R4122386	R4577503	R4577503
R44141476[268]	2-19/32 "	R42R55245	R42R55245[38]	R402235118	R402238231[201]	N/A[53]	-	R458632	R458632
R44141858[275]	2-19/32 "	R42R55245	R42R55245[38]	R402235118	R402238231[201]	R4111993[302]	R4122386	R4577503	R4577503
23-123552-004[266]	2-19/32 "	R42R55245	R42R55245[38]	R402235118	R402238231[201]	R4111993[302]	R4122386	R458632	R458632
23-122527-002[272]	2-19/32 "	R42R55245	R42R55245[38]	R402235118	R402238231[201]	N/A[53]	-	R458632	R458632
23-122920-002[273]	2-19/32 "	R42R55245	R42R55245[38]	R402235118	R402238231[201]	N/A[53]	-	R4577503	R4577503
R44141476[268]	2-19/32 "	R42R55245	R42R55245[38]	R402235118	R402238231[201]	R4111993[302]	R4122386	R458632	R458632
23-123572-004[271]	2-19/32 "	R42R55245	R42R55245[38]	R402235118	R402238231[201]	N/A[53]	-	R458632	R458632
R44141858[275]	2-19/32 "	R42R55245	R42R55245[38]	R402235118	R402238231[201]	R4111993[302]	R4122386	R458632	R458632
R44141858[275]	2-7/8 "	R429218X	R429218X[39]	R406532	R4090070[40]	R4111993[302]	R4122386	R458632	R458632
23-122527-002[272]	2-7/8 "	R429218X	R429218X[39]	R406532	R4090070[40]	N/A[53]	-	R4577503	R4577503
R44141476[268]	2-7/8 "	R429218X	R429218X[39]	R406532	R4090070[40]	R4111993[302]	R4122386	R4577503	R4577503
23-123572-004[271]	2-7/8 "	R429218X	R429218X[39]	R406532	R4090070[40]	N/A[53]	-	R458632	R458632
R44141858[275]	2-7/8 "	R429218X	R429218X[39]	R406532	R4090070[40]	N/A[53]	-	R4577503	R4577503
R44141476[268]	2-7/8 "	R429218X	R429218X[39]	R406532	R4090070[40]	R4111993[302]	R4122386	R4577503	R4577503
R44141858[275]	2-7/8 "	R429218X	R429218X[39]	R406532	R4090070[40]	R4111993[302]	R4122386	R458632	R458632
R44141858[275]	2-7/8 "	R429218X	R429218X[39]	R406532	R4090070[40]	R4111993[302]	R4122386	R458632	R458632
23-123552-004[266]	2-7/8 "	R429218X	R429218X[39]	R406532	R4090070[40]	R4111993[302]	R4122386	R458632	R458632
R44141858[275]	2-7/8 "	R429218X	R429218X[39]	R406532	R4090070[40]	N/A[53]	-	R4577503	R4577503
23-122920-002[273]	2-7/8 "	R429218X	R429218X[39]	R406532	R4090070[40]	N/A[53]	-	R458632	R458632
R44141476[268]	2-7/8 "	R429218X	R429218X[39]	R406532	R4090070[40]	N/A[53]	-	R458632	R458632
23-123572-004[271]	2-7/8 "	R429218X	R429218X[39]	R406532	R4090070[40]	R4111993[302]	R4122386	R4577503	R4577503
23-123552-004[266]	2-7/8 "	R429218X	R429218X[39]	R406532	R4090070[40]	R4111993[302]	R4122386	R4577503	R4577503
23-123572-004[271]	2-7/8 "	R429218X	R429218X[39]	R406532	R4090070[40]	N/A[53]	-	R458632	R458632
R44141858[275]	2-7/8 "	R429218X	R429218X[39]	R406532	R4090070[40]	N/A[53]	-	R458632	R458632
R44141476[268]	2-7/8 "	R429218X	R429218X[39]	R406532	R4090070[40]	N/A[53]	-	R4577503	R4577503
R44141476[268]	2-7/8 "	R429218X	R429218X[39]	R406532	R4090070[40]	R4111993[302]	R4122386	R458632	R458632
23-122527-002[272]	2-7/8 "	R429218X	R429218X[39]	R406532	R4090070[40]	N/A[53]	-	R458632	R458632
R44141476[268]	2-7/8 "	R429218X	R429218X[39]	R406532	R4090070[40]	R4111993[302]	R4122386	R4577503	R4577503
23-122527-002[272]	2-7/8 "	R429218X	R429218X[39]	R406532	R4090070[40]	N/A[53]	-	R4577503	R4577503
23-122527-002[272]	2-7/8 "	R429218X	R429218X[39]	R406532	R4090070[40]	R4111993[302]	R4122386	R458632	R458632
23-122920-002[273]	2-7/8 "	R429218X	R429218X[39]	R406532	R4090070[40]	N/A[53]	-	R458632	R458632
23-122920-002[273]	2-7/8 "	R429218X	R429218X[39]	R406532	R4090070[40]	R4111993[302]	R4122386	R458632	R458632
R44141476[268]	2-7/8 "	R429218X	R429218X[39]	R406532	R4090070[40]	R4111993[302]	R4122386	R458632	R458632
23-123552-004[266]	2-7/8 "	R429218X	R429218X[39]	R406532	R4090070[40]	N/A[53]	-	R458632	R458632
R44141858[275]	2-7/8 "	R429218X	R429218X[39]	R406532	R4090070[40]	R4111993[302]	R4122386	R4577503	R4577503
23-122527-002[272]	2-7/8 "	R429218X	R429218X[39]	R406532	R4090070[40]	N/A[53]	-	R458632	R458632
R44141476[268]	2-7/8 "	R429218X	R429218X[39]	R406532	R4090070[40]	R4111993[302]	R4122386	R458632	R458632
23-123572-004[271]	2-7/8 "	R429218X	R429218X[39]	R406532	R4090070[40]	N/A[53]	-	R4577503	R4577503
23-122920-002[273]	2-7/8 "	R429218X	R429218X[39]	R406532	R4090070[40]	R4111993[302]	R4122386	R4577503	R4577503
23-122527-002[272]	2-7/8 "	R429218X	R429218X[39]	R406532	R4090070[40]	N/A[53]	-	R458632	R458632
23-123572-004[271]	2-7/8 "	R429218X	R429218X[39]	R406532	R4090070[40]	R4111993[302]	R4122386	R458632	R458632
23-123572-004[271]	2-7/8 "	R429218X	R429218X[39]	R406532	R4090070[40]	R4111993[302]	R4122386	R4577503	R4577503
R44141476[268]	2-7/8 "	R429218X	R429218X[39]	R406532	R4090070[40]	N/A[53]	-	R4577503	R4577503
23-123552-004[266]	2-7/8 "	R429218X	R429218X[39]	R406532	R4090070[40]	N/A[53]	-	R458632	R458632
23-122920-002[273]	2-7/8 "	R429218X	R429218X[39]	R406532	R4090070[40]	N/A[53]	-	R4577503	R4577503
R44141858[275]	2-7/8 "	R429218X	R429218X[39]	R406532	R4090070[40]	R4111993[302]	R4122386	R4577503	R4577503
23-123552-004[266]	2-7/8 "	R429218X	R429218X[39]	R406532	R4090070[40]	N/A[53]	-	R4577503	R4577503

273 - 5 Stud, U Shape, .780 Dia. Studs

275 - 5 Stud, U Shape, .656 Dia. Studs

302 - Power Brakes, Dual System

MAKE MODEL YEAR AXLE CODE AXLE WEIGHT	AXLE & BRK. TYPE	BRK. MFG.	BRAKE SIZE	FMSI	MERITOR DISC PAD OR BRAKE SHOE	MERITOR GUIDE PIN OR RETURN SPRING KIT	MERITOR CALIPER HWD. KIT OR RETURN SPRING KIT	MERITOR ADJUSTER KIT (LEFT WHEEL)	MERITOR ADJUSTER KIT (RIGHT WHEEL)
ITE(Cont.)									
170, 1700, 1710, 1723, 1724, 1750, 1753, 1754 SERIES CONVENTIONAL CAB, SCHOOL BUS, TILT CAB(Cont.)									
1981									
	Fd	BX		7142 - D225	MD225	R40H5010	R40H5522	NR	NR
	Fd	BX		7142 - D225	MD225	R40H5010	R40H5522	NR	NR
	Fd	BX		7142 - D225	MD225	R40H5010	R40H5522	NR	NR
	Fd	BX		7142 - D225	MD225	R40H5010	R40H5522	NR	NR
	Fd	BX		7142 - D225	MD225	R40H5010	R40H5522	NR	NR
	Fd	BX		7142 - D225	MD225	R40H5010	R40H5522	NR	NR
	Fd	BX		7142 - D225	MD225	R40H5010	R40H5522	NR	NR
	Fd	BX		7142 - D225	MD225	R40H5010	R40H5522	NR	NR
	Fd	BX		7142 - D225	MD225	R40H5010	R40H5522	NR	NR
	Fd	BX		7142 - D225	MD225	R40H5010	R40H5522	NR	NR
	Fd	BX		7142 - D225	MD225	R40H5010	R40H5522	NR	NR
	Fd	BX		7142 - D225	MD225	R40H5010	R40H5522	NR	NR
	Fd	BX		7142 - D225	MD225	R40H5010	R40H5522	NR	NR
	Fd	BX		7142 - D225	MD225	R40H5010	R40H5522	NR	NR
	Fd	BX		7142 - D225	MD225	R40H5010	R40H5522	NR	NR
	Fd	BX		7142 - D225	MD225	R40H5010	R40H5522	NR	NR
	Fd	BX		7142 - D225	MD225	R40H5010	R40H5522	NR	NR
	Fd	BX		7142 - D225	MD225	R40H5010	R40H5522	NR	NR
	Fd	BX		7142 - D225	MD225	R40H5010	R40H5522	NR	NR
	Fd	BX		7142 - D225	MD225	R40H5010	R40H5522	NR	NR
	Fd	BX		7142 - D225	MD225	R40H5010	R40H5522	NR	NR
	Fd	BX		7142 - D225	MD225	R40H5010	R40H5522	NR	NR
	Fd	BX		7142 - D225	MD225	R40H5010	R40H5522	NR	NR
	Fd	BX		7142 - D225	MD225	R40H5010	R40H5522	NR	NR
	Fd	BX		7142 - D225	MD225	R40H5010	R40H5522	NR	NR
	Fd	BX		7142 - D225	MD225	R40H5010	R40H5522	NR	NR
	Fd	BX		7142 - D225	MD225	R40H5010	R40H5522	NR	NR
	Fd	BX		7142 - D225	MD225	R40H5010	R40H5522	NR	NR
	Fd	BX		7142 - D225	MD225	R40H5010	R40H5522	NR	NR
	Fd	BX		7142 - D225	MD225	R40H5010	R40H5522	NR	NR
	Fd	BX		7142 - D225	MD225	R40H5010	R40H5522	NR	NR
	Fd	BX		7142 - D225	MD225	R40H5010	R40H5522	NR	NR
	Fd	BX		7142 - D225	MD225	R40H5010	R40H5522	NR	NR
	Fd	BX		7142 - D225	MD225	R40H5010	R40H5522	NR	NR
	Fd	BX		7142 - D225	MD225	R40H5010	R40H5522	NR	NR
	Fd	BX		7142 - D225	MD225	R40H5010	R40H5522	NR	NR
	Fd	BX		7142 - D225	MD225	R40H5010	R40H5522	NR	NR
	Fd	BX		7142 - D225	MD225	R40H5010	R40H5522	NR	NR
	Fd	BX		7142 - D225	MD225	R40H5010	R40H5522	NR	NR
	Fd	BX		7142 - D225	MD225	R40H5010	R40H5522	NR	NR
	Fd	BX		7142 - D225	MD225	R40H5010	R40H5522	NR	NR
	Fd	BX		7142 - D225	MD225	R40H5010	R40H5522	NR	NR
	Fd	BX		7142 - D225	MD225	R40H5010	R40H5522	NR	NR
	Fd	BX		7142 - D225	MD225	R40H5010	R40H5522	NR	NR
	Fd	BX		7142 - D225	MD225	R40H5010	R40H5522	NR	NR
	Fd	BX		7142 - D225	MD225	R40H5010	R40H5522	NR	NR
	Fd	BX		7142 - D225	MD225	R40H5010	R40H5522	NR	NR
	Fd	BX		7142 - D225	MD225	R40H5010	R40H5522	NR	NR
	Fd	BX		7142 - D225	MD225	R40H5010	R40H5522	NR	NR
	Fd	BX		7142 - D225	MD225	R40H5010	R40H5522	NR	NR
	Fd	BX		7142 - D225	MD225	R40H5010	R40H5522	NR	NR
	Fd	BX		7142 - D225	MD225	R40H5010	R40H5522	NR	NR
	Fd	BX		7142 - D225	MD225	R40H5010	R40H5522	NR	NR
	Fd	BX		7142 - D225	MD225	R40H5010	R40H5522	NR	NR
	Fd	BX		7142 - D225	MD225	R40H5010	R40H5522	NR	NR
	Fd	BX		7142 - D225	MD225	R40H5010	R40H5522	NR	NR
	Fd	BX		7142 - D225	MD225	R40H5010	R40H5522	NR	NR
	Fd	BX		7142 - D225	MD225	R40H5010	R40H5522	NR	NR
	Fd	BX		7142 - D225	MD225	R40H5010	R40H5522	NR	NR
	Fd	BX		7142 - D225	MD225	R40H5010	R40H5522	NR	NR
	Fd	BX		7142 - D225	MD225	R40H5010	R40H5522	NR	NR
	Fd	BX		7142 - D225	MD225	R40H5010	R40H5522	NR	NR
	Fd	BX		7142 - D225	MD225	R40H5010	R40H5522	NR	NR
	Fd	BX		7142 - D225	MD225	R40H5010	R40H5522	NR	NR
	Fd	BX		7142 - D225	MD225	R40H5010	R40H5522	NR	NR
	Fd	BX		7142 - D225	MD225	R40H5010	R40H5522	NR	NR
	Fd	BX		7142 - D225	MD225	R40H5010	R40H5522	NR	NR

39 - First design, uses steel pistons.
40 - For chrome plated steel version, use R4090070P
53 - Power Brakes
266 - 10 Stud, Hat Shaped
268 - 5 Stud, Hat Shape
271 - 6 Stud, Hat Shape
272 - 6 Stud, U Shape
273 - 5 Stud, U Shape, .780 Dia. Studs
275 - 5 Stud, U Shape, .656 Dia. Studs

MERITOR DRUM OR ROTOR NO.	CALIPER OR CYLINDER BORE SIZE	MERITOR CALIPER OR WHEEL CYLINDER (LEFT)	MERITOR CALIPER OR WHEEL CYLINDER (RIGHT)	MERITOR CALIPER OR WHEEL CYLINDER REPAIR KIT	MERITOR CALIPER PISTON	MERITOR MASTER CYLINDER	MERITOR MASTER CYLINDER KIT	MERITOR BRAKE HOSE (LEFT)	MERITOR BRAKE HOSE (RIGHT)
									ITE(Cont.)
170, 1700, 1710, 1723, 1724, 1750, 1753, 1754 SERIES CONVENTIONAL CAB, SCHOOL BUS, TILT CAB(Cont.)									
23-122920-002[273]	2-7/8 "	R429218X	R429218X[39]	R406532	R4090070[40]	R4111993[302]	R4122386	R4577503	R4577503
R44141476[268]	2-7/8 "	R429218X	R429218X[39]	R406532	R4090070[40]	N/A[53]	-	R4577503	R4577503
R44141476[268]	2-7/8 "	R429218X	R429218X[39]	R406532	R4090070[40]	N/A[53]	-	R458632	R458632
23-122920-002[273]	2-7/8 "	R429218X	R429218X[39]	R406532	R4090070[40]	R4111993[302]	R4122386	R458632	R458632
23-122527-002[272]	2-7/8 "	R429218X	R429218X[39]	R406532	R4090070[40]	N/A[53]	-	R458632	R458632
23-123572-004[271]	2-7/8 "	R429218X	R429218X[39]	R406532	R4090070[40]	R4111993[302]	R4122386	R458632	R458632
23-122920-002[273]	2-7/8 "	R429218X	R429218X[39]	R406532	R4090070[40]	R4111993[302]	R4122386	R4577503	R4577503
23-123572-004[271]	2-7/8 "	R429218X	R429218X[39]	R406532	R4090070[40]	R4111993[302]	R4122386	R458632	R458632
R44141476[268]	2-7/8 "	R429218X	R429218X[39]	R406532	R4090070[40]	N/A[53]	-	R4577503	R4577503
23-122920-002[273]	2-7/8 "	R429218X	R429218X[39]	R406532	R4090070[40]	R4111993[302]	R4122386	R458632	R458632
23-123572-004[271]	2-7/8 "	R429218X	R429218X[39]	R406532	R4090070[40]	N/A[53]	-	R4577503	R4577503
23-123552-004[266]	2-7/8 "	R429218X	R429218X[39]	R406532	R4090070[40]	N/A[53]	-	R4577503	R4577503
23-123552-004[266]	2-7/8 "	R429218X	R429218X[39]	R406532	R4090070[40]	N/A[53]	-	R4577503	R4577503
23-123572-004[271]	2-7/8 "	R429218X	R429218X[39]	R406532	R4090070[40]	R4111993[302]	R4122386	R4577503	R4577503
R44141858[275]	2-7/8 "	R429218X	R429218X[39]	R406532	R4090070[40]	N/A[53]	-	R4577503	R4577503
23-122527-002[272]	2-7/8 "	R429218X	R429218X[39]	R406532	R4090070[40]	R4111993[302]	R4122386	R458632	R458632
R44141476[268]	2-7/8 "	R429218X	R429218X[39]	R406532	R4090070[40]	R4111993[302]	R4122386	R458632	R458632
23-123552-004[266]	2-7/8 "	R429218X	R429218X[39]	R406532	R4090070[40]	R4111993[302]	R4122386	R4577503	R4577503
23-123572-004[271]	2-7/8 "	R429218X	R429218X[39]	R406532	R4090070[40]	N/A[53]	-	R458632	R458632
23-122920-002[273]	2-7/8 "	R429218X	R429218X[39]	R406532	R4090070[40]	R4111993[302]	R4122386	R458632	R458632
23-123552-004[266]	2-7/8 "	R429218X	R429218X[39]	R406532	R4090070[40]	R4111993[302]	R4122386	R458632	R458632
R44141858[275]	2-7/8 "	R429218X	R429218X[39]	R406532	R4090070[40]	N/A[53]	-	R458632	R458632
23-122527-002[272]	2-7/8 "	R429218X	R429218X[39]	R406532	R4090070[40]	R4111993[302]	R4122386	R4577503	R4577503
23-122920-002[273]	2-7/8 "	R429218X	R429218X[39]	R406532	R4090070[40]	N/A[53]	-	R458632	R458632
R44141476[268]	2-7/8 "	R429218X	R429218X[39]	R406532	R4090070[40]	N/A[53]	-	R458632	R458632
23-123572-004[271]	2-7/8 "	R429218X	R429218X[39]	R406532	R4090070[40]	N/A[53]	-	R4577503	R4577503
23-123552-004[266]	2-7/8 "	R429218X	R429218X[39]	R406532	R4090070[40]	R4111993[302]	R4122386	R4577503	R4577503
23-122527-002[272]	2-7/8 "	R429218X	R429218X[39]	R406532	R4090070[40]	R4111993[302]	R4122386	R4577503	R4577503
23-122920-002[273]	2-7/8 "	R429218X	R429218X[39]	R406532	R4090070[40]	N/A[53]	-	R4577503	R4577503
23-122920-002[273]	2-7/8 "	R429218X	R429218X[39]	R406532	R4090070[40]	N/A[53]	-	R458632	R458632
23-122527-002[272]	2-7/8 "	R429218X	R429218X[39]	R406532	R4090070[40]	R4111993[302]	R4122386	R458632	R458632
R44141476[268]	2-7/8 "	R429218X	R429218X[39]	R406532	R4090070[40]	N/A[53]	-	R458632	R458632
23-122920-002[273]	2-7/8 "	R429218X	R429218X[39]	R406532	R4090070[40]	N/A[53]	-	R458632	R458632
23-122527-002[272]	2-7/8 "	R429218X	R429218X[39]	R406532	R4090070[40]	R4111993[302]	R4122386	R458632	R458632
23-122920-002[273]	2-7/8 "	R429218X	R429218X[39]	R406532	R4090070[40]	N/A[53]	-	R458632	R458632
23-123552-004[266]	2-7/8 "	R429218X	R429218X[39]	R406532	R4090070[40]	R4111993[302]	R4122386	R4577503	R4577503
23-123552-004[266]	2-7/8 "	R429218X	R429218X[39]	R406532	R4090070[40]	N/A[53]	-	R4577503	R4577503
23-123572-004[271]	2-7/8 "	R429218X	R429218X[39]	R406532	R4090070[40]	R4111993[302]	R4122386	R458632	R458632
23-123552-004[266]	2-7/8 "	R429218X	R429218X[39]	R406532	R4090070[40]	N/A[53]	-	R458632	R458632
R44141476[268]	2-7/8 "	R429218X	R429218X[39]	R406532	R4090070[40]	R4111993[302]	R4122386	R4577503	R4577503
23-123572-004[271]	2-7/8 "	R429218X	R429218X[39]	R406532	R4090070[40]	N/A[53]	-	R4577503	R4577503
23-123572-004[271]	2-7/8 "	R429218X	R429218X[39]	R406532	R4090070[40]	N/A[53]	-	R4577503	R4577503
23-123572-004[271]	2-7/8 "	R429218X	R429218X[39]	R406532	R4090070[40]	R4111993[302]	R4122386	R458632	R458632
23-123552-004[266]	2-7/8 "	R429218X	R429218X[39]	R406532	R4090070[40]	N/A[53]	-	R4577503	R4577503
23-123552-004[266]	2-7/8 "	R429218X	R429218X[39]	R406532	R4090070[40]	N/A[53]	-	R458632	R458632
R44141858[275]	2-7/8 "	R429218X	R429218X[39]	R406532	R4090070[40]	R4111993[302]	R4122386	R4577503	R4577503
R44141476[268]	2-7/8 "	R429218X	R429218X[39]	R406532	R4090070[40]	N/A[53]	-	R4577503	R4577503
23-123572-004[271]	2-7/8 "	R429218X	R429218X[39]	R406532	R4090070[40]	R4111993[302]	R4122386	R4577503	R4577503
23-122527-002[272]	2-7/8 "	R429218X	R429218X[39]	R406532	R4090070[40]	N/A[53]	-	R4577503	R4577503
23-122920-002[273]	2-7/8 "	R429218X	R429218X[39]	R406532	R4090070[40]	N/A[53]	-	R4577503	R4577503
R44141858[275]	2-7/8 "	R429218X	R429218X[39]	R406532	R4090070[40]	R4111993[302]	R4122386	R4577503	R4577503
23-123552-004[266]	2-7/8 "	R429218X	R429218X[39]	R406532	R4090070[40]	N/A[53]	-	R458632	R458632
R44141858[275]	2-7/8 "	R429218X	R429218X[39]	R406532	R4090070[40]	R4111993[302]	R4122386	R458632	R458632
23-123552-004[266]	2-7/8 "	R429218X	R429218X[39]	R406532	R4090070[40]	R4111993[302]	R4122386	R458632	R458632
23-123572-004[271]	2-7/8 "	R429218X	R429218X[39]	R406532	R4090070[40]	N/A[53]	-	R458632	R458632
23-122527-002[272]	2-7/8 "	R429218X	R429218X[39]	R406532	R4090070[40]	N/A[53]	-	R4577503	R4577503
R44141858[275]	2-7/8 "	R429218X	R429218X[39]	R406532	R4090070[40]	R4111993[302]	R4122386	R4577503	R4577503
R44141858[275]	2-7/8 "	R429218X	R429218X[39]	R406532	R4090070[40]	R4111993[302]	R4122386	R458632	R458632
R44141858[275]	2-7/8 "	R429218X	R429218X[39]	R406532	R4090070[40]	N/A[53]	-	R458632	R458632
23-122527-002[272]	2-7/8 "	R429218X	R429218X[39]	R406532	R4090070[40]	R4111993[302]	R4122386	R4577503	R4577503
R44141476[268]	2-7/8 "	R429218X	R429218X[39]	R406532	R4090070[40]	N/A[53]	-	R458632	R458632
23-123552-004[266]	2-7/8 "	R429218X	R429218X[39]	R406532	R4090070[40]	R4111993[302]	R4122386	R458632	R458632
23-122527-002[272]	2-7/8 "	R429218X	R429218X[39]	R406532	R4090070[40]	N/A[53]	-	R458632	R458632

302 - Power Brakes, Dual System

MAKE MODEL YEAR AXLE CODE AXLE WEIGHT	AXLE & BRK. TYPE	BRK. MFG.	BRAKE SIZE	FMSI	MERITOR DISC PAD OR BRAKE SHOE	MERITOR GUIDE PIN OR RETURN SPRING KIT	MERITOR CALIPER HWD. KIT OR RETURN SPRING KIT	MERITOR ADJUSTER KIT (LEFT WHEEL)	MERITOR ADJUSTER KIT (RIGHT WHEEL)
ITE(Cont.)									
170, 1700, 1710, 1723, 1724, 1750, 1753, 1754 SERIES CONVENTIONAL CAB, SCHOOL BUS, TILT CAB(Cont.)									
1981 S1723, S1753 School Bus FA309, 329, 339	Fd	BX		7142 - D225	MD225	R40H5010	R40H5522	NR	NR
	Fd	BX		7142 - D225	MD225	R40H5010	R40H5522	NR	NR
	Fd	BX		7142 - D225	MD225	R40H5010	R40H5522	NR	NR
	Fd	BX		7142 - D225	MD225	R40H5010	R40H5522	NR	NR
	Fd	BX		7142 - D225	MD225	R40H5010	R40H5522	NR	NR
	Fd	BX		7142 - D225	MD225	R40H5010	R40H5522	NR	NR
	Fd	BX		7142 - D225	MD225	R40H5010	R40H5522	NR	NR
	Fd	BX		7142 - D225	MD225	R40H5010	R40H5522	NR	NR
	Fd	BX		7142 - D225	MD225	R40H5010	R40H5522	NR	NR
	Fd	BX		7142 - D225	MD225	R40H5010	R40H5522	NR	NR
	Fd	BX		7142 - D225	MD225	R40H5010	R40H5522	NR	NR
	Fd	BX		7142 - D225	MD225	R40H5010	R40H5522	NR	NR
	Fd	BX		7142 - D225	MD225	R40H5010	R40H5522	NR	NR
	Fd	BX		7142 - D225	MD225	R40H5010	R40H5522	NR	NR
	Fd	BX		7142 - D225	MD225	R40H5010	R40H5522	NR	NR
	Fd	BX		7142 - D225	MD225	R40H5010	R40H5522	NR	NR
	Fd	BX		7142 - D225	MD225	R40H5010	R40H5522	NR	NR
	Fd	BX		7142 - D225	MD225	R40H5010	R40H5522	NR	NR
	Fd	BX		7142 - D225	MD225	R40H5010	R40H5522	NR	NR
	Fd	BX		7142 - D225	MD225	R40H5010	R40H5522	NR	NR
	Fd	BX		7142 - D225	MD225	R40H5010	R40H5522	NR	NR
	Fd	BX		7142 - D225	MD225	R40H5010	R40H5522	NR	NR
	Fd	BX		7142 - D225	MD225	R40H5010	R40H5522	NR	NR
	Fd	BX		7142 - D225	MD225	R40H5010	R40H5522	NR	NR
	Fd	BX		7142 - D225	MD225	R40H5010	R40H5522	NR	NR
	Fd	BX		7142 - D225	MD225	R40H5010	R40H5522	NR	NR
	Fd	BX		7142 - D225	MD225	R40H5010	R40H5522	NR	NR
	Fd	BX		7142 - D225	MD225	R40H5010	R40H5522	NR	NR
	Fd	BX		7142 - D225	MD225	R40H5010	R40H5522	NR	NR
	Fd	BX		7142 - D225	MD225	R40H5010	R40H5522	NR	NR
	Fd	BX		7142 - D225	MD225	R40H5010	R40H5522	NR	NR
	Fd	BX		7142 - D225	MD225	R40H5010	R40H5522	NR	NR
	Fd	BX		7142 - D225	MD225	R40H5010	R40H5522	NR	NR
	Fd	BX		7142 - D225	MD225	R40H5010	R40H5522	NR	NR
	Fd	BX		7142 - D225	MD225	R40H5010	R40H5522	NR	NR
	Fd	BX		7142 - D225	MD225	R40H5010	R40H5522	NR	NR
	Fd	BX		7142 - D225	MD225	R40H5010	R40H5522	NR	NR
	Fd	BX		7142 - D225	MD225	R40H5010	R40H5522	NR	NR
	Fd	BX		7142 - D225	MD225	R40H5010	R40H5522	NR	NR
	Fd	BX		7142 - D225	MD225	R40H5010	R40H5522	NR	NR
	Fd	BX		7142 - D225	MD225	R40H5010	R40H5522	NR	NR
	Fd	BX		7142 - D225	MD225	R40H5010	R40H5522	NR	NR
	Fd	BX		7142 - D225	MD225	R40H5010	R40H5522	NR	NR
	Fd	BX		7142 - D225	MD225	R40H5010	R40H5522	NR	NR
S1723, S1753 School Bus FA73	Fd	BX		7108 - D184	MD184	R40H5010	R40H5519	NR	NR
	Fd	BX		7108 - D184	MD184	R40H5010	R40H5519	NR	NR
	Fd	BX		7108 - D184	MD184	R40H5010	R40H5519	NR	NR
	Fd	BX		7108 - D184	MD184	R40H5010	R40H5519	NR	NR
	Fd	BX		7108 - D184	MD184	R40H5010	R40H5519	NR	NR
	Fd	BX		7108 - D184	MD184	R40H5010	R40H5519	NR	NR
	Fd	BX		7108 - D184	MD184	R40H5010	R40H5519	NR	NR
	Fd	BX		7108 - D184	MD184	R40H5010	R40H5519	NR	NR
S1723, S1753 School Bus RA29, 30, 42, 44	Rd	BX		7108 - D184	MD184	R40H5010	R40H5519	NR	NR
	Rd	BX		7142 - D225	MD225	R40H5010	R40H5522	NR	NR
	Rd	BX		7108 - D184	MD184	R40H5010	R40H5519	NR	NR
	Rd	BX		7142 - D225	MD225	R40H5010	R40H5522	NR	NR
	Rd	BX		7108 - D184	MD184	R40H5010	R40H5519	NR	NR
	Rd	BX		7142 - D225	MD225	R40H5010	R40H5522	NR	NR
	Rd	BX		7108 - D184	MD184	R40H5010	R40H5519	NR	NR
	Rd	BX		7142 - D225	MD225	R40H5010	R40H5522	NR	NR
	Rd	BX		7142 - D225	MD225	R40H5010	R40H5522	NR	NR
	Rd	BX		7142 - D225	MD225	R40H5010	R40H5522	NR	NR

37 - Also available as a New unit

38 - First design, may have external joining tube and uses steel pistons

39 - First design, uses steel pistons.

40 - For chrome plated steel version, use R4090070P

52 - 18" Length

53 - Power Brakes

201 - Steel Piston

266 - 10 Stud, Hat Shaped

267 - 10 Stud, U Shaped

MERITOR DRUM OR ROTOR NO.	CALIPER OR CYLINDER BORE SIZE	MERITOR CALIPER OR WHEEL CYLINDER (LEFT)	MERITOR CALIPER OR WHEEL CYLINDER (RIGHT)	MERITOR CALIPER OR WHEEL CYLINDER REPAIR KIT	MERITOR CALIPER PISTON	MERITOR MASTER CYLINDER	MERITOR MASTER CYLINDER KIT	MERITOR BRAKE HOSE (LEFT)	MERITOR BRAKE HOSE (RIGHT)
									ITE(Cont.)
170, 1700, 1710, 1723, 1724, 1750, 1753, 1754 SERIES CONVENTIONAL CAB, SCHOOL BUS, TILT CAB(Cont.)									
23-123552-004[266]	2-7/8 "	R429218X	R429218X[39]	R406532	R4090070[40]	R4111993[302]	R4122386	R4577503	R4577503
R44141858[275]	2-7/8 "	R429218X	R429218X[39]	R406532	R4090070[40]	N/A[53]	-	R4577503	R4577503
R44141858[275]	2-7/8 "	R429218X	R429218X[39]	R406532	R4090070[40]	N/A[53]	-	R458632	R458632
23-123572-004[271]	2-7/8 "	R429218X	R429218X[39]	R406532	R4090070[40]	N/A[53]	-	R458632	R458632
23-123552-004[266]	2-7/8 "	R429218X	R429218X[39]	R406532	R4090070[40]	R4111993[302]	R4122386	R4577503	R4577503
23-122527-002[272]	2-7/8 "	R429218X	R429218X[39]	R406532	R4090070[40]	N/A[53]	-	R4577503	R4577503
23-123572-004[271]	2-7/8 "	R429218X	R429218X[39]	R406532	R4090070[40]	N/A[53]	-	R458632	R458632
23-122527-002[272]	2-7/8 "	R429218X	R429218X[39]	R406532	R4090070[40]	N/A[53]	-	R458632	R458632
R44141476[268]	2-7/8 "	R429218X	R429218X[39]	R406532	R4090070[40]	N/A[53]	-	R458632	R458632
R44141858[275]	2-7/8 "	R429218X	R429218X[39]	R406532	R4090070[40]	N/A[53]	-	R458632	R458632
R44141858[275]	2-7/8 "	R429218X	R429218X[39]	R406532	R4090070[40]	N/A[53]	-	R4577503	R4577503
23-123552-004[266]	2-7/8 "	R429218X	R429218X[39]	R406532	R4090070[40]	R4111993[302]	R4122386	R458632	R458632
23-122920-002[273]	2-7/8 "	R429218X	R429218X[39]	R406532	R4090070[40]	R4111993[302]	R4122386	R458632	R458632
R44141476[268]	2-7/8 "	R429218X	R429218X[39]	R406532	R4090070[40]	R4111993[302]	R4122386	R458632	R458632
23-122920-002[273]	2-7/8 "	R429218X	R429218X[39]	R406532	R4090070[40]	N/A[53]	-	R4577503	R4577503
R44141476[268]	2-7/8 "	R429218X	R429218X[39]	R406532	R4090070[40]	R4111993[302]	R4122386	R4577503	R4577503
23-122527-002[272]	2-7/8 "	R429218X	R429218X[39]	R406532	R4090070[40]	R4111993[302]	R4122386	R4577503	R4577503
23-122920-002[273]	2-7/8 "	R429218X	R429218X[39]	R406532	R4090070[40]	R4111993[302]	R4122386	R4577503	R4577503
23-122527-002[272]	2-7/8 "	R429218X	R429218X[39]	R406532	R4090070[40]	R4111993[302]	R4122386	R458632	R458632
23-123572-004[271]	2-7/8 "	R429218X	R429218X[39]	R406532	R4090070[40]	N/A[53]	-	R4577503	R4577503
23-123552-004[266]	2-7/8 "	R429218X	R429218X[39]	R406532	R4090070[40]	N/A[53]	-	R4577503	R4577503
R44141858[275]	2-7/8 "	R429218X	R429218X[39]	R406532	R4090070[40]	R4111993[302]	R4122386	R4577503	R4577503
23-122527-002[272]	2-7/8 "	R429218X	R429218X[39]	R406532	R4090070[40]	R4111993[302]	R4122386	R458632	R458632
R44141858[275]	2-7/8 "	R429218X	R429218X[39]	R406532	R4090070[40]	N/A[53]	-	R4577503	R4577503
23-123572-004[271]	2-7/8 "	R429218X	R429218X[39]	R406532	R4090070[40]	R4111993[302]	R4122386	R4577503	R4577503
23-123572-004[271]	2-7/8 "	R429218X	R429218X[39]	R406532	R4090070[40]	R4111993[302]	R4122386	R4577503	R4577503
23-123552-004[266]	2-7/8 "	R429218X	R429218X[39]	R406532	R4090070[40]	N/A[53]	-	R458632	R458632
23-123572-004[271]	2-7/8 "	R429218X	R429218X[39]	R406532	R4090070[40]	R4111993[302]	R4122386	R458632	R458632
23-123552-004[266]	2-7/8 "	R429218X	R429218X[39]	R406532	R4090070[40]	R4111993[302]	R4122386	R458632	R458632
23-122527-002[272]	2-7/8 "	R429218X	R429218X[39]	R406532	R4090070[40]	N/A[53]	-	R4577503	R4577503
R44141858[275]	2-7/8 "	R429218X	R429218X[39]	R406532	R4090070[40]	R4111993[302]	R4122386	R458632	R458632
23-122920-002[273]	2-7/8 "	R429218X	R429218X[39]	R406532	R4090070[40]	R4111993[302]	R4122386	R4577503	R4577503
R44141858[275]	2-7/8 "	R429218X	R429218X[39]	R406532	R4090070[40]	N/A[53]	-	R458632	R458632
23-122527-002[272]	2-7/8 "	R429218X	R429218X[39]	R406532	R4090070[40]	R4111993[302]	R4122386	R4577503	R4577503
23-122920-002[273]	2-7/8 "	R429218X	R429218X[39]	R406532	R4090070[40]	N/A[53]	-	R4577503	R4577503
R44141476[268]	2-7/8 "	R429218X	R429218X[39]	R406532	R4090070[40]	N/A[53]	-	R4577503	R4577503
R44141476[268]	2-7/8 "	R429218X	R429218X[39]	R406532	R4090070[40]	R4111993[302]	R4122386	R458632	R458632
23-122920-002[273]	2-7/8 "	R429218X	R429218X[39]	R406532	R4090070[40]	R4111993[302]	R4122386	R458632	R458632
R44141476[268]	2-7/8 "	R429218X	R429218X[39]	R406532	R4090070[40]	R4111993[302]	R4122386	R4577503	R4577503
23-122920-002[273]	2-7/8 "	R429218X	R429218X[39]	R406532	R4090070[40]	N/A[53]	-	R4577503	R4577503
23-122527-002[272]	2-7/8 "	R429218X	R429218X[39]	R406532	R4090070[40]	R4111993[302]	R4122386	R4577503	R4577503
23-122920-002[273]	2-7/8 "	R429218X	R429218X[39]	R406532	R4090070[40]	R4111993[302]	R4122386	R4577503	R4577503
23-122527-002[272]	3-3/8 "	R42R55099	R42R55098[37]	R4066780	R4090021[201]	N/A[53]	-	R4577503	R4577503
23-122527-002[272]	3-3/8 "	R42R55099	R42R55098[37]	R4066780	R4090021[201]	N/A[53]	-	R458632	R458632
23-122527-002[272]	3-3/8 "	R42R55099	R42R55098[37]	R4066780	R4090021[201]	R4111993[302]	R4122386	R458632	R458632
23-122527-002[272]	3-3/8 "	R42R55099	R42R55098[37]	R4066780	R4090021[201]	N/A[53]	-	R4577503	R4577503
23-122527-002[272]	3-3/8 "	R42R55099	R42R55098[37]	R4066780	R4090021[201]	R4111993[302]	R4122386	R4577503	R4577503
23-122527-002[272]	3-3/8 "	R42R55099	R42R55098[37]	R4066780	R4090021[201]	R4111993[302]	R4122386	R458632	R458632
23-122527-002[272]	3-3/8 "	R42R55099	R42R55098[37]	R4066780	R4090021[201]	N/A[53]	-	R458632	R458632
23-122527-002[272]	3-3/8 "	R42R55099	R42R55098[37]	R4066780	R4090021[201]	R4111993[302]	R4122386	R4577503	R4577503
R44141608[267]	2-19/32 "	R42R55245	R42R55245[38]	R402235118	R402238231[201]	-	-	R458634[52]	R458634
R44141628[269]	2-7/8 "	R429218X	R429218X[39]	R406532	R4090070[40]	-	-	R458634[52]	R458634
R44141629[269]	2-19/32 "	R42R55245	R42R55245[38]	R402235118	R402238231[201]	-	-	R458634[52]	R458634
R44141627[270]	2-7/8 "	R429218X	R429218X[39]	R406532	R4090070[40]	-	-	R458634[52]	R458634
23-123552-004[266]	2-19/32 "	R42R55245	R42R55245[38]	R402235118	R402238231[201]	-	-	R458634[52]	R458634
23-122527-002[272]	2-7/8 "	R429218X	R429218X[39]	R406532	R4090070[40]	-	-	R458634[52]	R458634
R44141628[269]	2-19/32 "	R42R55245	R42R55245[38]	R402235118	R402238231[201]	-	-	R458634[52]	R458634
23-122527-002[272]	2-7/8 "	R429218X	R429218X[39]	R406532	R4090070[40]	-	-	R458634[52]	R458634
R44141628[269]	2-7/8 "	R429218X	R429218X[39]	R406532	R4090070[40]	-	-	R458634[52]	R458634
23-123552-004[266]	2-7/8 "	R429218X	R429218X[39]	R406532	R4090070[40]	-	-	R458634[52]	R458634

268 - 5 Stud, Hat Shape

269 - 5 Stud, U Shape

270 - 5 Stud, U Shape, .766 Dia. Studs

271 - 6 Stud, Hat Shape

272 - 6 Stud, U Shape

273 - 5 Stud, U Shape, .780 Dia. Studs

275 - 5 Stud, U Shape, .656 Dia. Studs

302 - Power Brakes, Dual System

MAKE MODEL YEAR AXLE CODE AXLE WEIGHT	AXLE & BRK. TYPE	BRK. MFG.	BRAKE SIZE	FMSI	MERITOR DISC PAD OR BRAKE SHOE	MERITOR GUIDE PIN OR RETURN SPRING KIT	MERITOR CALIPER HWD. KIT OR RETURN SPRING KIT	MERITOR ADJUSTER KIT (LEFT WHEEL)	MERITOR ADJUSTER KIT (RIGHT WHEEL)
ITE(Cont.)									
170, 1700, 1710, 1723, 1724, 1750, 1753, 1754 SERIES CONVENTIONAL CAB, SCHOOL BUS, TILT CAB(Cont.)									
1981									
	Rd	BX		7108 - D184	MD184	R40H5010	R40H5519	NR	NR
	Rd	BX		7108 - D184	MD184	R40H5010	R40H5519	NR	NR
	Rd	BX		7142 - D225	MD225	R40H5010	R40H5522	NR	NR
	Rd	BX		7142 - D225	MD225	R40H5010	R40H5522	NR	NR
	Rd	BX		7142 - D225	MD225	R40H5010	R40H5522	NR	NR
	Rd	BX		7108 - D184	MD184	R40H5010	R40H5519	NR	NR
	Rd	BX		7142 - D225	MD225	R40H5010	R40H5522	NR	NR
	Rd	BX		7108 - D184	MD184	R40H5010	R40H5519	NR	NR
	Rd	BX		7142 - D225	MD225	R40H5010	R40H5522	NR	NR
	Rd	BX		7142 - D225	MD225	R40H5010	R40H5522	NR	NR
	Rd	BX		7142 - D225	MD225	R40H5010	R40H5522	NR	NR
	Rd	BX		7142 - D225	MD225	R40H5010	R40H5522	NR	NR
	Rd	BX		7108 - D184	MD184	R40H5010	R40H5519	NR	NR
	Rd	BX		7142 - D225	MD225	R40H5010	R40H5522	NR	NR
	Rd	BX		7108 - D184	MD184	R40H5010	R40H5519	NR	NR
	Rd	BX		7142 - D225	MD225	R40H5010	R40H5522	NR	NR
	Rd	BX		7108 - D184	MD184	R40H5010	R40H5519	NR	NR
	Rd	BX		7142 - D225	MD225	R40H5010	R40H5522	NR	NR
	Rd	BX		7142 - D225	MD225	R40H5010	R40H5522	NR	NR
	Rd	BX		7142 - D225	MD225	R40H5010	R40H5522	NR	NR
	Rd	BX		7108 - D184	MD184	R40H5010	R40H5519	NR	NR
	Rd	BX		7108 - D184	MD184	R40H5010	R40H5519	NR	NR
	Rd	BX		7108 - D184	MD184	R40H5010	R40H5519	NR	NR
	Rd	BX		7142 - D225	MD225	R40H5010	R40H5522	NR	NR
	Rd	BX		7142 - D225	MD225	R40H5010	R40H5522	NR	NR
	Rd	BX		7142 - D225	MD225	R40H5010	R40H5522	NR	NR
	Rd	BX		7142 - D225	MD225	R40H5010	R40H5522	NR	NR
	Rd	BX		7108 - D184	MD184	R40H5010	R40H5519	NR	NR
	Rd	BX		7108 - D184	MD184	R40H5010	R40H5519	NR	NR
	Rd	BX		7108 - D184	MD184	R40H5010	R40H5519	NR	NR
	Rd	BX		7108 - D184	MD184	R40H5010	R40H5519	NR	NR
	Rd	BX		7142 - D225	MD225	R40H5010	R40H5522	NR	NR
	Rd	BX		7142 - D225	MD225	R40H5010	R40H5522	NR	NR
	Rd	BX		7142 - D225	MD225	R40H5010	R40H5522	NR	NR
	Rd	BX		7142 - D225	MD225	R40H5010	R40H5522	NR	NR
	Rd	BX		7142 - D225	MD225	R40H5010	R40H5522	NR	NR
	Rd	BX		7142 - D225	MD225	R40H5010	R40H5522	NR	NR
	Rd	BX		7142 - D225	MD225	R40H5010	R40H5522	NR	NR
	Rd	BX		7142 - D225	MD225	R40H5010	R40H5522	NR	NR
	Rd	BX		7142 - D225	MD225	R40H5010	R40H5522	NR	NR
	Rd	BX		7142 - D225	MD225	R40H5010	R40H5522	NR	NR
	Rd	BX		7108 - D184	MD184	R40H5010	R40H5519	NR	NR
	Rd	BX		7108 - D184	MD184	R40H5010	R40H5519	NR	NR
	Rd	BX		7142 - D225	MD225	R40H5010	R40H5522	NR	NR
	Rd	BX		7108 - D184	MD184	R40H5010	R40H5519	NR	NR
	Rd	BX		7142 - D225	MD225	R40H5010	R40H5522	NR	NR
	Rd	BX		7108 - D184	MD184	R40H5010	R40H5519	NR	NR
	Rd	BX		7108 - D184	MD184	R40H5010	R40H5519	NR	NR
	Rd	BX		7142 - D225	MD225	R40H5010	R40H5522	NR	NR
	Rd	BX		7142 - D225	MD225	R40H5010	R40H5522	NR	NR
	Rd	BX		7108 - D184	MD184	R40H5010	R40H5519	NR	NR
	Rd	BX		7142 - D225	MD225	R40H5010	R40H5522	NR	NR
	Rd	BX		7142 - D225	MD225	R40H5010	R40H5522	NR	NR
	Rd	BX		7142 - D225	MD225	R40H5010	R40H5522	NR	NR
	Rd	BX		7142 - D225	MD225	R40H5010	R40H5522	NR	NR
	Rd	BX		7142 - D225	MD225	R40H5010	R40H5522	NR	NR
	Rd	BX		7108 - D184	MD184	R40H5010	R40H5519	NR	NR
	Rd	BX		7142 - D225	MD225	R40H5010	R40H5522	NR	NR
	Rd	BX		7142 - D225	MD225	R40H5010	R40H5522	NR	NR
	Rd	BX		7142 - D225	MD225	R40H5010	R40H5522	NR	NR
S1724, S1754 Conventional FA109, 208	Fa	WG	15 " x 3 "	1245C - 321	R700321	R40H521	R40H9237	R40H3502	R40H3503
	Fm	WG	15 " x 3 "	1245A - 235	R700235	R40H521	R40H9201	R40H3524	R40H3524
S1724, S1754 Conventional FA118, 127, 139	Fa	WG	15 " x 5 "	1345A - 491	N/A	R40H521	R40H9237	R40H3502	R40H3503
	Fm	WG	15 " x 5 "	1345 - 490	N/A	R40H521	R40H9201	R40H3524	R40H3524
S1724, S1754 Conventional FA208	Fa	WG	15 " x 3-1/2 "	1280B - 322	R464004	R40H521	R40H9237	R40H3502	R40H3503

38 - First design, may have external joining tube and uses steel pistons
39 - First design, uses steel pistons.
40 - For chrome plated steel version, use R4090070P
52 - 18" Length
201 - Steel Piston
266 - 10 Stud, Hat Shaped
267 - 10 Stud, U Shaped
269 - 5 Stud, U Shape
270 - 5 Stud, U Shape, .766 Dia. Studs

MERITOR DRUM OR ROTOR NO.	CALIPER OR CYLINDER BORE SIZE	MERITOR CALIPER OR WHEEL CYLINDER (LEFT)	MERITOR CALIPER OR WHEEL CYLINDER (RIGHT)	MERITOR CALIPER OR WHEEL CYLINDER REPAIR KIT	MERITOR CALIPER PISTON	MERITOR MASTER CYLINDER	MERITOR MASTER CYLINDER KIT	MERITOR BRAKE HOSE (LEFT)	MERITOR BRAKE HOSE (RIGHT)
									ITE(Cont.)
170, 1700, 1710, 1723, 1724, 1750, 1753, 1754 SERIES CONVENTIONAL CAB, SCHOOL BUS, TILT CAB(Cont.)									
R44141629[269]	2-19/32 "	R42R55245	R42R55245[38]	R402235118	R402238231[201]	-	-	R458634[52]	R458634
23-123552-004[266]	2-19/32 "	R42R55245	R42R55245[38]	R402235118	R402238231[201]	-	-	R458634[52]	R458634
R44141627[270]	2-7/8 "	R429218X	R429218X[39]	R406532	R4090070[40]	-	-	R458634[52]	R458634
23-123572-004[271]	2-7/8 "	R429218X	R429218X[39]	R406532	R4090070[40]	-	-	R458634[52]	R458634
23-122527-002[272]	2-7/8 "	R429218X	R429218X[39]	R406532	R4090070[40]	-	-	R458634[52]	R458634
R44141608[267]	2-19/32 "	R42R55245	R42R55245[38]	R402235118	R402238231[201]	-	-	R458634[52]	R458634
R44141628[269]	2-7/8 "	R429218X	R429218X[39]	R406532	R4090070[40]	-	-	R458634[52]	R458634
23-123572-004[271]	2-19/32 "	R42R55245	R42R55245[38]	R402235118	R402238231[201]	-	-	R458634[52]	R458634
R44141608[267]	2-7/8 "	R429218X	R429218X[39]	R406532	R4090070[40]	-	-	R458634[52]	R458634
R44141608[267]	2-7/8 "	R429218X	R429218X[39]	R406532	R4090070[40]	-	-	R458634[52]	R458634
R44141628[269]	2-7/8 "	R429218X	R429218X[39]	R406532	R4090070[40]	-	-	R458634[52]	R458634
23-123552-004[266]	2-7/8 "	R429218X	R429218X[39]	R406532	R4090070[40]	-	-	R458634[52]	R458634
R44141629[269]	2-19/32 "	R42R55245	R42R55245[38]	R402235118	R402238231[201]	-	-	R458634[52]	R458634
23-122527-002[272]	2-7/8 "	R429218X	R429218X[39]	R406532	R4090070[40]	-	-	R458634[52]	R458634
R44141628[269]	2-19/32 "	R42R55245	R42R55245[38]	R402235118	R402238231[201]	-	-	R458634[52]	R458634
23-123572-004[271]	2-7/8 "	R429218X	R429218X[39]	R406532	R4090070[40]	-	-	R458634[52]	R458634
R44141629[269]	2-19/32 "	R42R55245	R42R55245[38]	R402235118	R402238231[201]	-	-	R458634[52]	R458634
R44141628[269]	2-7/8 "	R429218X	R429218X[39]	R406532	R4090070[40]	-	-	R458634[52]	R458634
R44141629[269]	2-7/8 "	R429218X	R429218X[39]	R406532	R4090070[40]	-	-	R458634[52]	R458634
23-123552-004[266]	2-7/8 "	R429218X	R429218X[39]	R406532	R4090070[40]	-	-	R458634[52]	R458634
R44141608[267]	2-19/32 "	R42R55245	R42R55245[38]	R402235118	R402238231[201]	-	-	R458634[52]	R458634
23-122527-002[272]	2-19/32 "	R42R55245	R42R55245[38]	R402235118	R402238231[201]	-	-	R458634[52]	R458634
23-123552-004[266]	2-19/32 "	R42R55245	R42R55245[38]	R402235118	R402238231[201]	-	-	R458634[52]	R458634
23-123552-004[266]	2-7/8 "	R429218X	R429218X[39]	R406532	R4090070[40]	-	-	R458634[52]	R458634
23-123572-004[271]	2-7/8 "	R429218X	R429218X[39]	R406532	R4090070[40]	-	-	R458634[52]	R458634
23-122527-002[272]	2-7/8 "	R429218X	R429218X[39]	R406532	R4090070[40]	-	-	R458634[52]	R458634
R44141608[267]	2-7/8 "	R429218X	R429218X[39]	R406532	R4090070[40]	-	-	R458634[52]	R458634
23-123572-004[271]	2-19/32 "	R42R55245	R42R55245[38]	R402235118	R402238231[201]	-	-	R458634[52]	R458634
23-123572-004[271]	2-19/32 "	R42R55245	R42R55245[38]	R402235118	R402238231[201]	-	-	R458634[52]	R458634
23-122527-002[272]	2-19/32 "	R42R55245	R42R55245[38]	R402235118	R402238231[201]	-	-	R458634[52]	R458634
R44141629[269]	2-7/8 "	R429218X	R429218X[39]	R406532	R4090070[40]	-	-	R458634[52]	R458634
R44141627[270]	2-7/8 "	R429218X	R429218X[39]	R406532	R4090070[40]	-	-	R458634[52]	R458634
R44141629[269]	2-7/8 "	R429218X	R429218X[39]	R406532	R4090070[40]	-	-	R458634[52]	R458634
R44141627[270]	2-7/8 "	R429218X	R429218X[39]	R406532	R4090070[40]	-	-	R458634[52]	R458634
R44141608[267]	2-7/8 "	R429218X	R429218X[39]	R406532	R4090070[40]	-	-	R458634[52]	R458634
23-123552-004[266]	2-7/8 "	R429218X	R429218X[39]	R406532	R4090070[40]	-	-	R458634[52]	R458634
23-123572-004[271]	2-7/8 "	R429218X	R429218X[39]	R406532	R4090070[40]	-	-	R458634[52]	R458634
R44141629[269]	2-7/8 "	R429218X	R429218X[39]	R406532	R4090070[40]	-	-	R458634[52]	R458634
R44141628[269]	2-19/32 "	R42R55245	R42R55245[38]	R402235118	R402238231[201]	-	-	R458634[52]	R458634
R44141627[270]	2-19/32 "	R42R55245	R42R55245[38]	R402235118	R402238231[201]	-	-	R458634[52]	R458634
R44141629[269]	2-7/8 "	R429218X	R429218X[39]	R406532	R4090070[40]	-	-	R458634[52]	R458634
23-123552-004[266]	2-19/32 "	R42R55245	R42R55245[38]	R402235118	R402238231[201]	-	-	R458634[52]	R458634
23-123572-004[271]	2-7/8 "	R429218X	R429218X[39]	R406532	R4090070[40]	-	-	R458634[52]	R458634
23-123572-004[271]	2-19/32 "	R42R55245	R42R55245[38]	R402235118	R402238231[201]	-	-	R458634[52]	R458634
R44141627[270]	2-19/32 "	R42R55245	R42R55245[38]	R402235118	R402238231[201]	-	-	R458634[52]	R458634
R44141627[270]	2-7/8 "	R429218X	R429218X[39]	R406532	R4090070[40]	-	-	R458634[52]	R458634
R44141608[267]	2-7/8 "	R429218X	R429218X[39]	R406532	R4090070[40]	-	-	R458634[52]	R458634
R44141608[267]	2-19/32 "	R42R55245	R42R55245[38]	R402235118	R402238231[201]	-	-	R458634[52]	R458634
23-123552-004[266]	2-7/8 "	R429218X	R429218X[39]	R406532	R4090070[40]	-	-	R458634[52]	R458634
23-123572-004[271]	2-7/8 "	R429218X	R429218X[39]	R406532	R4090070[40]	-	-	R458634[52]	R458634
R44141629[269]	2-7/8 "	R429218X	R429218X[39]	R406532	R4090070[40]	-	-	R458634[52]	R458634
R44141628[269]	2-7/8 "	R429218X	R429218X[39]	R406532	R4090070[40]	-	-	R458634[52]	R458634
R44141628[269]	2-19/32 "	R42R55245	R42R55245[38]	R402235118	R402238231[201]	-	-	R458634[52]	R458634
R44141627[270]	2-7/8 "	R429218X	R429218X[39]	R406532	R4090070[40]	-	-	R458634[52]	R458634
23-122527-002[272]	2-7/8 "	R429218X	R429218X[39]	R406532	R4090070[40]	-	-	R458634[52]	R458634
R44141608[267]	2-7/8 "	R429218X	R429218X[39]	R406532	R4090070[40]	-	-	R458634[52]	R458634
N/A	1-1/4 "	R4133581	R4133582	R4166923	NR	-	-	-	-
N/A	1-1/4 "	R4133581	R4133582	R4166923	NR	-	-	-	-
N/A		-	-	N/A	N/A	-	-	-	-
N/A		-	-	N/A	N/A	-	-	-	-
N/A	1-1/4 "	R4133581	R4133582	R4166923	NR	-	-	-	-

271 - 6 Stud, Hat Shape

272 - 6 Stud, U Shape

MAKE MODEL YEAR AXLE CODE AXLE WEIGHT	AXLE & BRK. TYPE	BRK. MFG.	BRAKE SIZE	FMSI	MERITOR DISC PAD OR BRAKE SHOE	MERITOR GUIDE PIN OR RETURN SPRING KIT	MERITOR CALIPER HWD. KIT OR RETURN SPRING KIT	MERITOR ADJUSTER KIT (LEFT WHEEL)	MERITOR ADJUSTER KIT (RIGHT WHEEL)
ITE(Cont.)									
170, 1700, 1710, 1723, 1724, 1750, 1753, 1754 SERIES CONVENTIONAL CAB, SCHOOL BUS, TILT CAB(Cont.)									
1981									
	Fm	WG	15 " x 3-1/2 "	1280 - 463	R700463	R40H521	R40H9201	R40H3524	R40H3524
S1724, S1754 Conventional									
FA48, 68, 70, 72	Fa	WG	14 " x 2-1/2 "	1294A - 325	N/A	R40H521	R40H9237	R40H3502	R40H3503
	Fm	WG	14 " x 2-1/2 "	1294 - 296	N/A	R40H521	R40H9201	R40H3524	R40H3524
S1724, S1754 Conventional									
FA71, 73, 101	Fa	WG	15 " x 3 "	1245C - 321	R700321	R40H521	R40H9237	R40H3502	R40H3503
	Fa	WG	15 " x 3-1/2 "	1280B - 322	R464004	R40H521	R40H9237	R40H3502	R40H3503
	Fm	WG	15 " x 3 "	1245A - 235	R700235	R40H521	R40H9201	R40H3524	R40H3524
	Fm	WG	15 " x 3-1/2 "	1280 - 463	R700463	R40H521	R40H9201	R40H3524	R40H3524
S1724, S1754 Conventional									
FA74	Fa	WG	15 " x 3 "	1245C - 321	R700321	R40H521	R40H9237	R40H3502	R40H3503
	Fm	WG	15 " x 3 "	1245A - 235	R700235	R40H521	R40H9201	R40H3524	R40H3524
S1724, S1754 Conventional									
FA78, 81	Fa	WG	15 " x 3 "	1245C - 321	R700321	R40H521	R40H9237	R40H3502	R40H3503
S1724, S1754 Conventional									
FA89, 91, 98	Fa	WG	15 " x 3 "	1245C - 321	R700321	R40H521	R40H9237	R40H3502	R40H3503
	Fm	WG	15 " x 3 "	1245A - 235	R700235	R40H521	R40H9201	R40H3524	R40H3524
S1724, S1754 Conventional									
RA184	Ra	WG	15 " x 4 "	4645A - 376	Discontinued	R40H597	R40H9200	R40H3540	R40H3541
	Rm	WG	15 " x 4 "	4645A - 376	Discontinued	R40H597	R40H9200	R40H3518	R404148
S1724, S1754 Conventional									
RA25, 184	Ra	WG	15 " x 5 "	1252 - 346	R700346	R40H597	R40H9200	R40H3540	R40H3541
	Rm	WG	15 " x 5 "	1252 - 346	R700346	R40H597	R40H9200	R40H3518	R404148
S1724, S1754 Conventional									
RA29, 30, 187	Ra	WG	15 " x 5 "	1252 - 346	R700346	R40H597	R40H9200	R40H3540	R40H3541
	Rm	WG	15 " x 5 "	1252 - 346	R700346	R40H597	R40H9200	R40H3518	R404148
S1724, S1754 Conventional									
RA30, 187	Ra	WG	16 " x 5 "	1254 - 385	N/A	R40H597	R40H9200	N/A	N/A
	Rm	WG	16 " x 5 "	1254 - 385	N/A	R40H597	R40H9200	R404149	R404150
S1724, S1754 Conventional									
RA30, 39, 44, 186, 189	Ra	WG	15 " x 6 "	4596 - 381	R700381	R40H597	R40H9200	R40H3540	R40H3541
	Rm	WG	15 " x 6 "	4596 - 381	R700381	R40H597	R40H9200	R40H3518	R404148
S1724, S1754 Conventional									
RA39, 199	Ra	WG	15 " x 7 "	4597 - 383	R700383	R40H597	R40H9200	R40H3540	R40H3541
	Rm	WG	15 " x 7 "	4597 - 383	R700383	R40H597	R40H9200	R40H3518	R404148
S1724, S1754 Conventional									
RA44, 186	Ra	WG	15 " x 7 "	4597 - 383	R700383	R40H597	R40H9200	N/A	N/A
	Rm	WG	15 " x 7 "	4597 - 383	R700383	R40H597	R40H9200	R40H3518	R404148
S1724, S1754 Conventional									
RA47, 57	Ra	WG	16 " x 6 "	1255 - 386	N/A	R40H597	R40H9200	N/A	N/A
	Rm	WG	16 " x 6 "	1255 - 386	N/A	R40H597	R40H9200	R404149	R404150
1980									
C1710, C1750 Cargostar Tilt Cab									
FA109, 208	Fa	WG	15 " x 3 "	1245C - 321	R700321	R40H521	R40H9237	R40H3502	R40H3503
	Fm	WG	15 " x 3 "	1245A - 235	R700235	R40H521	R40H9201	R40H3524	R40H3524
C1710, C1750 Cargostar Tilt Cab									
FA118, 127, 139	Fa	WG	15 " x 5 "	1345A - 491	N/A	R40H521	R40H9237	R40H3502	R40H3503
	Fm	WG	15 " x 5 "	1345 - 490	N/A	R40H521	R40H9201	R40H3524	R40H3524
C1710, C1750 Cargostar Tilt Cab									
FA208	Fa	WG	15 " x 3-1/2 "	1280B - 322	R464004	R40H521	R40H9237	R40H3502	R40H3503
	Fm	WG	15 " x 3-1/2 "	1280 - 463	R700463	R40H521	R40H9201	R40H3524	R40H3524
C1710, C1750 Cargostar Tilt Cab									
FA48, 68, 70, 72	Fa	WG	14 " x 2-1/2 "	1294A - 325	N/A	R40H521	R40H9237	R40H3502	R40H3503
	Fm	WG	14 " x 2-1/2 "	1294 - 296	N/A	R40H521	R40H9201	R40H3524	R40H3524
C1710, C1750 Cargostar Tilt Cab									
FA71, 73, 101	Fa	WG	15 " x 3 "	1245C - 321	R700321	R40H521	R40H9237	R40H3502	R40H3503

MERITOR DRUM OR ROTOR NO.	CALIPER OR CYLINDER BORE SIZE	MERITOR CALIPER OR WHEEL CYLINDER (LEFT)	MERITOR CALIPER OR WHEEL CYLINDER (RIGHT)	MERITOR CALIPER OR WHEEL CYLINDER REPAIR KIT	MERITOR CALIPER PISTON	MERITOR MASTER CYLINDER	MERITOR MASTER CYLINDER KIT	MERITOR BRAKE HOSE (LEFT)	MERITOR BRAKE HOSE (RIGHT)
									ITE(Cont.)
170, 1700, 1710, 1723, 1724, 1750, 1753, 1754 SERIES CONVENTIONAL CAB, SCHOOL BUS, TILT CAB(Cont.)									
N/A	1-1/4 "	R4133581	R4133582	R4166923	NR	-	-	-	-
N/A	1-1/8 "	R4133714	R4133715	R4166926	NR	-	-	-	-
N/A	1-1/8 "	R4133714	R4133715	R4166926	NR	-	-	-	-
N/A	1-1/4 "	R4133581	R4133582	R4166923	NR	-	-	-	-
N/A	1-1/4 "	R4133581	R4133582	R4166923	NR	-	-	-	-
N/A	1-1/4 "	R4133581	R4133582	R4166923	NR	-	-	-	-
N/A	1-1/4 "	R4133581	R4133582	R4166923	NR	-	-	-	-
N/A	1-1/4 "	R4133581	R4133582	R4166923	NR	-	-	-	-
N/A	1-1/4 "	R4133581	R4133582	R4166923	NR	-	-	-	-
N/A	1-1/4 "	R4133581	R4133582	R4166923	NR	-	-	-	-
N/A	1-1/4 "	R4133581	R4133582	R4166923	NR	-	-	-	-
N/A	1-1/4 "	R4133581	R4133582	R4166923	NR	-	-	-	-
N/A	1-1/2 "	R4133580	R4133580	Discontinued	NR	-	-	-	-
N/A	1-1/2 "	R4133580	R4133580	Discontinued	NR	-	-	-	-
N/A	1-1/2 "	R4133580	R4133580	Discontinued	NR	-	-	-	-
N/A	1-1/2 "	R4133580	R4133580	Discontinued	NR	-	-	-	-
N/A	1-1/2 "	R4133580	R4133580	Discontinued	NR	-	-	-	-
N/A	1-1/2 "	R4133580	R4133580	Discontinued	NR	-	-	-	-
N/A	1-5/8 "	R4133338	R4133338	R4166689	NR	-	-	-	-
N/A	1-5/8 "	R4133338	R4133338	R4166689	NR	-	-	-	-
N/A	1-5/8 "	R4133338	R4133338	R4166689	NR	-	-	-	-
N/A	1-5/8 "	R4133338	R4133338	R4166689	NR	-	-	-	-
N/A	1-5/8 "	R4133338	R4133338	R4166689	NR	-	-	-	-
N/A	1-5/8 "	R4133338	R4133338	R4166689	NR	-	-	-	-
N/A	1-5/8 "	R4133338	R4133338	R4166689	NR	-	-	-	-
N/A	1-3/4 "	R4133400	R4133400	R4166917	NR	-	-	-	-
N/A	1-3/4 "	R4133400	R4133400	R4166917	NR	-	-	-	-
N/A	1-1/4 "	R4133581	R4133582	R4166923	NR	-	-	-	-
N/A	1-1/4 "	R4133581	R4133582	R4166923	NR	-	-	-	-
N/A		-	-	N/A	N/A	-	-	-	-
N/A		-	-	N/A	N/A	-	-	-	-
N/A	1-1/4 "	R4133581	R4133582	R4166923	NR	-	-	-	-
N/A	1-1/4 "	R4133581	R4133582	R4166923	NR	-	-	-	-
N/A	1-1/8 "	R4133714	R4133715	R4166926	NR	-	-	-	-
N/A	1-1/8 "	R4133714	R4133715	R4166926	NR	-	-	-	-
N/A	1-1/4 "	R4133581	R4133582	R4166923	NR	-	-	-	-

MAKE MODEL YEAR AXLE CODE AXLE WEIGHT	AXLE & BRK. TYPE	BRK. MFG.	BRAKE SIZE	FMSI	MERITOR DISC PAD OR BRAKE SHOE	MERITOR GUIDE PIN OR RETURN SPRING KIT	MERITOR CALIPER HWD. KIT OR RETURN SPRING KIT	MERITOR ADJUSTER KIT (LEFT WHEEL)	MERITOR ADJUSTER KIT (RIGHT WHEEL)
ITE(Cont.)									
170, 1700, 1710, 1723, 1724, 1750, 1753, 1754 SERIES CONVENTIONAL CAB, SCHOOL BUS, TILT CAB(Cont.)									
1980									
	Fa	WG	15 " x 3-1/2 "	1280B - 322	R464004	R40H521	R40H9237	R40H3502	R40H3503
	Fm	WG	15 " x 3 "	1245A - 235	R700235	R40H521	R40H9201	R40H3524	R40H3524
	Fm	WG	15 " x 3-1/2 "	1280 - 463	R700463	R40H521	R40H9201	R40H3524	R40H3524
C1710, C1750 Cargostar Tilt Cab FA74	Fa	WG	15 " x 3 "	1245C - 321	R700321	R40H521	R40H9237	R40H3502	R40H3503
	Fm	WG	15 " x 3 "	1245A - 235	R700235	R40H521	R40H9201	R40H3524	R40H3524
C1710, C1750 Cargostar Tilt Cab FA78, 81	Fa	WG	15 " x 3 "	1245C - 321	R700321	R40H521	R40H9237	R40H3502	R40H3503
C1710, C1750 Cargostar Tilt Cab FA89, 91, 98	Fa	WG	15 " x 3 "	1245C - 321	R700321	R40H521	R40H9237	R40H3502	R40H3503
	Fm	WG	15 " x 3 "	1245A - 235	R700235	R40H521	R40H9201	R40H3524	R40H3524
C1710, C1750 Cargostar Tilt Cab RA184	Ra	WG	15 " x 4 "	4645A - 376	Discontinued	R40H597	R40H9200	R40H3540	R40H3541
	Rm	WG	15 " x 4 "	4645A - 376	Discontinued	R40H597	R40H9200	R40H3518	R404148
C1710, C1750 Cargostar Tilt Cab RA25, 184	Ra	WG	15 " x 5 "	1252 - 346	R700346	R40H597	R40H9200	R40H3540	R40H3541
	Rm	WG	15 " x 5 "	1252 - 346	R700346	R40H597	R40H9200	R40H3518	R404148
C1710, C1750 Cargostar Tilt Cab RA29, 30, 187	Ra	WG	15 " x 5 "	1252 - 346	R700346	R40H597	R40H9200	R40H3540	R40H3541
	Rm	WG	15 " x 5 "	1252 - 346	R700346	R40H597	R40H9200	R40H3518	R404148
C1710, C1750 Cargostar Tilt Cab RA30, 187	Ra	WG	16 " x 5 "	1254 - 385	N/A	R40H597	R40H9200	N/A	N/A
	Rm	WG	16 " x 5 "	1254 - 385	N/A	R40H597	R40H9200	R404149	R404150
C1710, C1750 Cargostar Tilt Cab RA30, 39, 44, 186, 189	Ra	WG	15 " x 6 "	4596 - 381	R700381	R40H597	R40H9200	R40H3540	R40H3541
	Rm	WG	15 " x 6 "	4596 - 381	R700381	R40H597	R40H9200	R40H3518	R404148
C1710, C1750 Cargostar Tilt Cab RA39, 199	Ra	WG	15 " x 7 "	4597 - 383	R700383	R40H597	R40H9200	R40H3540	R40H3541
	Rm	WG	15 " x 7 "	4597 - 383	R700383	R40H597	R40H9200	R40H3518	R404148
C1710, C1750 Cargostar Tilt Cab RA44, 186	Ra	WG	15 " x 7 "	4597 - 383	R700383	R40H597	R40H9200	N/A	N/A
	Rm	WG	15 " x 7 "	4597 - 383	R700383	R40H597	R40H9200	R40H3518	R404148
C1710, C1750 Cargostar Tilt Cab RA47, 57	Ra	WG	16 " x 6 "	1255 - 386	N/A	R40H597	R40H9200	N/A	N/A
	Rm	WG	16 " x 6 "	1255 - 386	N/A	R40H597	R40H9200	R404149	R404150
S1723, S1753 School Bus	Fd	BX		7108 - D184	MD184	R40H5010	R40H5519	NR	NR
	Fd	BX		7108 - D184	MD184	R40H5010	R40H5519	NR	NR
	Fd	BX		7108 - D184	MD184	R40H5010	R40H5519	NR	NR
	Fd	BX		7108 - D184	MD184	R40H5010	R40H5519	NR	NR
	Fd	BX		7108 - D184	MD184	R40H5010	R40H5519	NR	NR
	Fd	BX		7108 - D184	MD184	R40H5010	R40H5519	NR	NR
	Fd	BX		7108 - D184	MD184	R40H5010	R40H5519	NR	NR
	Fd	BX		7108 - D184	MD184	R40H5010	R40H5519	NR	NR
	Fd	BX		7108 - D184	MD184	R40H5010	R40H5519	NR	NR
	Fd	BX		7108 - D184	MD184	R40H5010	R40H5519	NR	NR
	Fd	BX		7108 - D184	MD184	R40H5010	R40H5519	NR	NR
	Fd	BX		7108 - D184	MD184	R40H5010	R40H5519	NR	NR
	Fd	BX		7108 - D184	MD184	R40H5010	R40H5519	NR	NR
	Fd	BX		7108 - D184	MD184	R40H5010	R40H5519	NR	NR
	Fd	BX		7108 - D184	MD184	R40H5010	R40H5519	NR	NR
	Fd	BX		7108 - D184	MD184	R40H5010	R40H5519	NR	NR
	Fd	BX		7108 - D184	MD184	R40H5010	R40H5519	NR	NR

37 - Also available as a New unit
266 - 10 Stud, Hat Shaped
273 - 5 Stud, U Shape, .780 Dia. Studs
53 - Power Brakes
268 - 5 Stud, Hat Shape
275 - 5 Stud, U Shape, .656 Dia. Studs
201 - Steel Piston
271 - 6 Stud, Hat Shape
302 - Power Brakes, Dual System

MERITOR DRUM OR ROTOR NO.	CALIPER OR CYLINDER BORE SIZE	MERITOR CALIPER OR WHEEL CYLINDER (LEFT)	MERITOR CALIPER OR WHEEL CYLINDER (RIGHT)	MERITOR CALIPER OR WHEEL CYLINDER REPAIR KIT	MERITOR CALIPER PISTON	MERITOR MASTER CYLINDER	MERITOR MASTER CYLINDER KIT	MERITOR BRAKE HOSE (LEFT)	MERITOR BRAKE HOSE (RIGHT)
									ITE(Cont.)
170, 1700, 1710, 1723, 1724, 1750, 1753, 1754 SERIES CONVENTIONAL CAB, SCHOOL BUS, TILT CAB(Cont.)									
N/A	1-1/4 "	R4133581	R4133582	R4166923	NR	-	-	-	-
N/A	1-1/4 "	R4133581	R4133582	R4166923	NR	-	-	-	-
N/A	1-1/4 "	R4133581	R4133582	R4166923	NR	-	-	-	-
N/A	1-1/4 "	R4133581	R4133582	R4166923	NR	-	-	-	-
N/A	1-1/4 "	R4133581	R4133582	R4166923	NR	-	-	-	-
N/A	1-1/4 "	R4133581	R4133582	R4166923	NR	-	-	-	-
N/A	1-1/4 "	R4133581	R4133582	R4166923	NR	-	-	-	-
N/A	1-1/2 "	R4133580	R4133580	Discontinued	NR	-	-	-	-
N/A	1-1/2 "	R4133580	R4133580	Discontinued	NR	-	-	-	-
N/A	1-1/2 "	R4133580	R4133580	Discontinued	NR	-	-	-	-
N/A	1-1/2 "	R4133580	R4133580	Discontinued	NR	-	-	-	-
N/A	1-1/2 "	R4133580	R4133580	Discontinued	NR	-	-	-	-
N/A	1-1/2 "	R4133580	R4133580	Discontinued	NR	-	-	-	-
N/A	1-5/8 "	R4133338	R4133338	R4166689	NR	-	-	-	-
N/A	1-5/8 "	R4133338	R4133338	R4166689	NR	-	-	-	-
N/A	1-5/8 "	R4133338	R4133338	R4166689	NR	-	-	-	-
N/A	1-5/8 "	R4133338	R4133338	R4166689	NR	-	-	-	-
N/A	1-5/8 "	R4133338	R4133338	R4166689	NR	-	-	-	-
N/A	1-5/8 "	R4133338	R4133338	R4166689	NR	-	-	-	-
N/A	1-5/8 "	R4133338	R4133338	R4166689	NR	-	-	-	-
N/A	1-5/8 "	R4133338	R4133338	R4166689	NR	-	-	-	-
N/A	1-3/4 "	R4133400	R4133400	R4166917	NR	-	-	-	-
N/A	1-3/4 "	R4133400	R4133400	R4166917	NR	-	-	-	-
23-122920-002[273]	3-3/8 "	R42R55099	R42R55098[37]	R4066780	R4090021[201]	N/A[53]	-	R4577503	R4577503
R44141476[268]	3-3/8 "	R42R55099	R42R55098[37]	R4066780	R4090021[201]	R4111993[302]	R4122386	R4577503	R4577503
23-122920-002[273]	3-3/8 "	R42R55099	R42R55098[37]	R4066780	R4090021[201]	N/A[53]	-	R458632	R458632
23-123552-004[266]	3-3/8 "	R42R55099	R42R55098[37]	R4066780	R4090021[201]	N/A[53]	-	R458632	R458632
R44141476[268]	3-3/8 "	R42R55099	R42R55098[37]	R4066780	R4090021[201]	N/A[53]	-	R458632	R458632
R44141476[268]	3-3/8 "	R42R55099	R42R55098[37]	R4066780	R4090021[201]	N/A[53]	-	R458632	R458632
23-123572-004[271]	3-3/8 "	R42R55099	R42R55098[37]	R4066780	R4090021[201]	R4111993[302]	R4122386	R4577503	R4577503
R44141858[275]	3-3/8 "	R42R55099	R42R55098[37]	R4066780	R4090021[201]	N/A[53]	-	R458632	R458632
23-122920-002[273]	3-3/8 "	R42R55099	R42R55098[37]	R4066780	R4090021[201]	R4111993[302]	R4122386	R458632	R458632
R44141476[268]	3-3/8 "	R42R55099	R42R55098[37]	R4066780	R4090021[201]	R4111993[302]	R4122386	R458632	R458632
23-122920-002[273]	3-3/8 "	R42R55099	R42R55098[37]	R4066780	R4090021[201]	R4111993[302]	R4122386	R4577503	R4577503
23-122920-002[273]	3-3/8 "	R42R55099	R42R55098[37]	R4066780	R4090021[201]	R4111993[302]	R4122386	R4577503	R4577503
23-122920-002[273]	3-3/8 "	R42R55099	R42R55098[37]	R4066780	R4090021[201]	R4111993[302]	R4122386	R458632	R458632
R44141858[275]	3-3/8 "	R42R55099	R42R55098[37]	R4066780	R4090021[201]	N/A[53]	-	R4577503	R4577503
23-123552-004[266]	3-3/8 "	R42R55099	R42R55098[37]	R4066780	R4090021[201]	N/A[53]	-	R4577503	R4577503
23-123572-004[271]	3-3/8 "	R42R55099	R42R55098[37]	R4066780	R4090021[201]	R4111993[302]	R4122386	R4577503	R4577503

MAKE MODEL YEAR AXLE CODE AXLE WEIGHT	AXLE & BRK. TYPE	BRK. MFG.	BRAKE SIZE	FMSI	MERITOR DISC PAD OR BRAKE SHOE	MERITOR GUIDE PIN OR RETURN SPRING KIT	MERITOR CALIPER HWD. KIT OR RETURN SPRING KIT	MERITOR ADJUSTER KIT (LEFT WHEEL)	MERITOR ADJUSTER KIT (RIGHT WHEEL)
ITE(Cont.)									
170, 1700, 1710, 1723, 1724, 1750, 1753, 1754 SERIES CONVENTIONAL CAB, SCHOOL BUS, TILT CAB(Cont.)									
1980									
	Fd	BX		7108 - D184	MD184	R40H5010	R40H5519	NR	NR
	Fd	BX		7108 - D184	MD184	R40H5010	R40H5519	NR	NR
	Fd	BX		7108 - D184	MD184	R40H5010	R40H5519	NR	NR
	Fd	BX		7108 - D184	MD184	R40H5010	R40H5519	NR	NR
	Fd	BX		7108 - D184	MD184	R40H5010	R40H5519	NR	NR
	Fd	BX		7108 - D184	MD184	R40H5010	R40H5519	NR	NR
	Fd	BX		7108 - D184	MD184	R40H5010	R40H5519	NR	NR
	Fd	BX		7108 - D184	MD184	R40H5010	R40H5519	NR	NR
	Fd	BX		7108 - D184	MD184	R40H5010	R40H5519	NR	NR
	Fd	BX		7108 - D184	MD184	R40H5010	R40H5519	NR	NR
	Fd	BX		7108 - D184	MD184	R40H5010	R40H5519	NR	NR
	Fd	BX		7108 - D184	MD184	R40H5010	R40H5519	NR	NR
	Fd	BX		7108 - D184	MD184	R40H5010	R40H5519	NR	NR
	Fd	BX		7108 - D184	MD184	R40H5010	R40H5519	NR	NR
	Fd	BX		7108 - D184	MD184	R40H5010	R40H5519	NR	NR
	Fd	BX		7108 - D184	MD184	R40H5010	R40H5519	NR	NR
	Fd	BX		7108 - D184	MD184	R40H5010	R40H5519	NR	NR
	Fd	BX		7108 - D184	MD184	R40H5010	R40H5519	NR	NR
	Fd	BX		7108 - D184	MD184	R40H5010	R40H5519	NR	NR
	Fd	BX		7108 - D184	MD184	R40H5010	R40H5519	NR	NR
	Fd	BX		7108 - D184	MD184	R40H5010	R40H5519	NR	NR
	Fd	BX		7108 - D184	MD184	R40H5010	R40H5519	NR	NR
	Fd	BX		7108 - D184	MD184	R40H5010	R40H5519	NR	NR
	Fd	BX		7108 - D184	MD184	R40H5010	R40H5519	NR	NR
S1723, S1753 School Bus FA101									
	Fd	BX		7108 - D184	MD184	R40H5010	R40H5519	NR	NR
	Fd	BX		7108 - D184	MD184	R40H5010	R40H5519	NR	NR
	Fd	BX		7108 - D184	MD184	R40H5010	R40H5519	NR	NR
	Fd	BX		7108 - D184	MD184	R40H5010	R40H5519	NR	NR
	Fd	BX		7108 - D184	MD184	R40H5010	R40H5519	NR	NR
	Fd	BX		7108 - D184	MD184	R40H5010	R40H5519	NR	NR
	Fd	BX		7108 - D184	MD184	R40H5010	R40H5519	NR	NR
	Fd	BX		7108 - D184	MD184	R40H5010	R40H5519	NR	NR
	Fd	BX		7108 - D184	MD184	R40H5010	R40H5519	NR	NR
	Fd	BX		7108 - D184	MD184	R40H5010	R40H5519	NR	NR
	Fd	BX		7108 - D184	MD184	R40H5010	R40H5519	NR	NR
	Fd	BX		7108 - D184	MD184	R40H5010	R40H5519	NR	NR
	Fd	BX		7108 - D184	MD184	R40H5010	R40H5519	NR	NR
	Fd	BX		7108 - D184	MD184	R40H5010	R40H5519	NR	NR
	Fd	BX		7108 - D184	MD184	R40H5010	R40H5519	NR	NR
	Fd	BX		7108 - D184	MD184	R40H5010	R40H5519	NR	NR
	Fd	BX		7108 - D184	MD184	R40H5010	R40H5519	NR	NR
	Fd	BX		7108 - D184	MD184	R40H5010	R40H5519	NR	NR
	Fd	BX		7108 - D184	MD184	R40H5010	R40H5519	NR	NR
	Fd	BX		7108 - D184	MD184	R40H5010	R40H5519	NR	NR
	Fd	BX		7108 - D184	MD184	R40H5010	R40H5519	NR	NR
	Fd	BX		7108 - D184	MD184	R40H5010	R40H5519	NR	NR
	Fd	BX		7108 - D184	MD184	R40H5010	R40H5519	NR	NR
	Fd	BX		7108 - D184	MD184	R40H5010	R40H5519	NR	NR
	Fd	BX		7108 - D184	MD184	R40H5010	R40H5519	NR	NR
	Fd	BX		7108 - D184	MD184	R40H5010	R40H5519	NR	NR
S1723, S1753 School Bus FA309, 329, 339									
	Fd	BX		7142 - D225	MD225	R40H5010	R40H5522	NR	NR
	Fd	BX		7142 - D225	MD225	R40H5010	R40H5522	NR	NR
	Fd	BX		7142 - D225	MD225	R40H5010	R40H5522	NR	NR
	Fd	BX		7142 - D225	MD225	R40H5010	R40H5522	NR	NR
	Fd	BX		7142 - D225	MD225	R40H5010	R40H5522	NR	NR
	Fd	BX		7142 - D225	MD225	R40H5010	R40H5522	NR	NR
	Fd	BX		7142 - D225	MD225	R40H5010	R40H5522	NR	NR
	Fd	BX		7142 - D225	MD225	R40H5010	R40H5522	NR	NR
	Fd	BX		7142 - D225	MD225	R40H5010	R40H5522	NR	NR
	Fd	BX		7142 - D225	MD225	R40H5010	R40H5522	NR	NR
	Fd	BX		7142 - D225	MD225	R40H5010	R40H5522	NR	NR
	Fd	BX		7142 - D225	MD225	R40H5010	R40H5522	NR	NR
	Fd	BX		7142 - D225	MD225	R40H5010	R40H5522	NR	NR
	Fd	BX		7142 - D225	MD225	R40H5010	R40H5522	NR	NR

37 - Also available as a New unit

38 - First design, may have external joining tube and uses steel pistons

39 - First design, uses steel pistons.

40 - For chrome plated steel version, use R4090070P

53 - Power Brakes

201 - Steel Piston

266 - 10 Stud, Hat Shaped

268 - 5 Stud, Hat Shape

271 - 6 Stud, Hat Shape

MERITOR DRUM OR ROTOR NO.	CALIPER OR CYLINDER BORE SIZE	MERITOR CALIPER OR WHEEL CYLINDER (LEFT)	MERITOR CALIPER OR WHEEL CYLINDER (RIGHT)	MERITOR CALIPER OR WHEEL CYLINDER REPAIR KIT	MERITOR CALIPER PISTON	MERITOR MASTER CYLINDER	MERITOR MASTER CYLINDER KIT	MERITOR BRAKE HOSE (LEFT)	MERITOR BRAKE HOSE (RIGHT)
									ITE(Cont.)
170, 1700, 1710, 1723, 1724, 1750, 1753, 1754 SERIES CONVENTIONAL CAB, SCHOOL BUS, TILT CAB(Cont.)									
23-123552-004[266]	3-3/8 "	R42R55099	R42R55098[37]	R4066780	R4090021[201]	N/A[53]	-	R458632	R458632
R44141858[275]	3-3/8 "	R42R55099	R42R55098[37]	R4066780	R4090021[201]	R4111993[302]	R4122386	R458632	R458632
23-123552-004[266]	3-3/8 "	R42R55099	R42R55098[37]	R4066780	R4090021[201]	N/A[53]	-	R4577503	R4577503
R44141858[275]	3-3/8 "	R42R55099	R42R55098[37]	R4066780	R4090021[201]	R4111993[302]	R4122386	R458632	R458632
23-123552-004[266]	3-3/8 "	R42R55099	R42R55098[37]	R4066780	R4090021[201]	R4111993[302]	R4122386	R458632	R458632
23-123572-004[271]	3-3/8 "	R42R55099	R42R55098[37]	R4066780	R4090021[201]	N/A[53]	-	R458632	R458632
R44141858[275]	3-3/8 "	R42R55099	R42R55098[37]	R4066780	R4090021[201]	R4111993[302]	R4122386	R4577503	R4577503
R44141476[268]	3-3/8 "	R42R55099	R42R55098[37]	R4066780	R4090021[201]	N/A[53]	-	R4577503	R4577503
23-123552-004[266]	3-3/8 "	R42R55099	R42R55098[37]	R4066780	R4090021[201]	R4111993[302]	R4122386	R458632	R458632
R44141858[275]	3-3/8 "	R42R55099	R42R55098[37]	R4066780	R4090021[201]	R4111993[302]	R4122386	R4577503	R4577503
23-123572-004[271]	3-3/8 "	R42R55099	R42R55098[37]	R4066780	R4090021[201]	N/A[53]	-	R458632	R458632
R44141476[268]	3-3/8 "	R42R55099	R42R55098[37]	R4066780	R4090021[201]	R4111993[302]	R4122386	R458632	R458632
23-123552-004[266]	3-3/8 "	R42R55099	R42R55098[37]	R4066780	R4090021[201]	R4111993[302]	R4122386	R4577503	R4577503
23-123572-004[271]	3-3/8 "	R42R55099	R42R55098[37]	R4066780	R4090021[201]	R4111993[302]	R4122386	R458632	R458632
23-123572-004[271]	3-3/8 "	R42R55099	R42R55098[37]	R4066780	R4090021[201]	R4111993[302]	R4122386	R458632	R458632
R44141858[275]	3-3/8 "	R42R55099	R42R55098[37]	R4066780	R4090021[201]	N/A[53]	-	R4577503	R4577503
23-123572-004[271]	3-3/8 "	R42R55099	R42R55098[37]	R4066780	R4090021[201]	N/A[53]	-	R4577503	R4577503
R44141858[275]	3-3/8 "	R42R55099	R42R55098[37]	R4066780	R4090021[201]	N/A[53]	-	R458632	R458632
23-123552-004[266]	3-3/8 "	R42R55099	R42R55098[37]	R4066780	R4090021[201]	R4111993[302]	R4122386	R4577503	R4577503
23-122920-002[273]	3-3/8 "	R42R55099	R42R55098[37]	R4066780	R4090021[201]	N/A[53]	-	R458632	R458632
23-122920-002[273]	3-3/8 "	R42R55099	R42R55098[37]	R4066780	R4090021[201]	N/A[53]	-	R4577503	R4577503
R44141476[268]	3-3/8 "	R42R55099	R42R55098[37]	R4066780	R4090021[201]	R4111993[302]	R4122386	R4577503	R4577503
23-123572-004[271]	3-3/8 "	R42R55099	R42R55098[37]	R4066780	R4090021[201]	N/A[53]	-	R4577503	R4577503
R44141476[268]	3-3/8 "	R42R55099	R42R55098[37]	R4066780	R4090021[201]	N/A[53]	-	R4577503	R4577503
23-122920-002[273]	2-19/32 "	R42R55245	R42R55245[38]	R402235118	R402238231[201]	N/A[53]	-	R458632	R458632
23-122527-002[272]	2-19/32 "	R42R55245	R42R55245[38]	R402235118	R402238231[201]	N/A[53]	-	R4577503	R4577503
23-123572-004[271]	2-19/32 "	R42R55245	R42R55245[38]	R402235118	R402238231[201]	R4111993[302]	R4122386	R458632	R458632
R44141858[275]	2-19/32 "	R42R55245	R42R55245[38]	R402235118	R402238231[201]	N/A[53]	-	R4577503	R4577503
R44141476[268]	2-19/32 "	R42R55245	R42R55245[38]	R402235118	R402238231[201]	R4111993[302]	R4122386	R458632	R458632
23-123552-004[266]	2-19/32 "	R42R55245	R42R55245[38]	R402235118	R402238231[201]	N/A[53]	-	R458632	R458632
23-123552-004[266]	2-19/32 "	R42R55245	R42R55245[38]	R402235118	R402238231[201]	R4111993[302]	R4122386	R4577503	R4577503
23-123572-004[271]	2-19/32 "	R42R55245	R42R55245[38]	R402235118	R402238231[201]	N/A[53]	-	R4577503	R4577503
R44141858[275]	2-19/32 "	R42R55245	R42R55245[38]	R402235118	R402238231[201]	R4111993[302]	R4122386	R4577503	R4577503
23-123572-004[271]	2-19/32 "	R42R55245	R42R55245[38]	R402235118	R402238231[201]	N/A[53]	-	R458632	R458632
R44141476[268]	2-19/32 "	R42R55245	R42R55245[38]	R402235118	R402238231[201]	N/A[53]	-	R4577503	R4577503
23-122527-002[272]	2-19/32 "	R42R55245	R42R55245[38]	R402235118	R402238231[201]	R4111993[302]	R4122386	R458632	R458632
23-123552-004[266]	2-19/32 "	R42R55245	R42R55245[38]	R402235118	R402238231[201]	N/A[53]	-	R4577503	R4577503
R44141476[268]	2-19/32 "	R42R55245	R42R55245[38]	R402235118	R402238231[201]	N/A[53]	-	R458632	R458632
23-123552-004[266]	2-19/32 "	R42R55245	R42R55245[38]	R402235118	R402238231[201]	R4111993[302]	R4122386	R458632	R458632
23-123572-004[271]	2-19/32 "	R42R55245	R42R55245[38]	R402235118	R402238231[201]	R4111993[302]	R4122386	R4577503	R4577503
23-122920-002[273]	2-19/32 "	R42R55245	R42R55245[38]	R402235118	R402238231[201]	R4111993[302]	R4122386	R4577503	R4577503
R44141858[275]	2-19/32 "	R42R55245	R42R55245[38]	R402235118	R402238231[201]	R4111993[302]	R4122386	R458632	R458632
R44141858[275]	2-19/32 "	R42R55245	R42R55245[38]	R402235118	R402238231[201]	N/A[53]	-	R458632	R458632
23-122527-002[272]	2-19/32 "	R42R55245	R42R55245[38]	R402235118	R402238231[201]	R4111993[302]	R4122386	R4577503	R4577503
23-122527-002[272]	2-19/32 "	R42R55245	R42R55245[38]	R402235118	R402238231[201]	N/A[53]	-	R458632	R458632
R44141476[268]	2-19/32 "	R42R55245	R42R55245[38]	R402235118	R402238231[201]	R4111993[302]	R4122386	R4577503	R4577503
23-122920-002[273]	2-19/32 "	R42R55245	R42R55245[38]	R402235118	R402238231[201]	N/A[53]	-	R4577503	R4577503
23-122920-002[273]	2-19/32 "	R42R55245	R42R55245[38]	R402235118	R402238231[201]	R4111993[302]	R4122386	R458632	R458632
R44141858[275]	2-7/8 "	R429218X	R429218X[39]	R406532	R4090070[40]	N/A[53]	-	R4577503	R4577503
23-122527-002[272]	2-7/8 "	R429218X	R429218X[39]	R406532	R4090070[40]	N/A[53]	-	R458632	R458632
R44141858[275]	2-7/8 "	R429218X	R429218X[39]	R406532	R4090070[40]	N/A[53]	-	R458632	R458632
23-123572-004[271]	2-7/8 "	R429218X	R429218X[39]	R406532	R4090070[40]	N/A[53]	-	R4577503	R4577503
23-122920-002[273]	2-7/8 "	R429218X	R429218X[39]	R406532	R4090070[40]	R4111993[302]	R4122386	R458632	R458632
23-122527-002[272]	2-7/8 "	R429218X	R429218X[39]	R406532	R4090070[40]	R4111993[302]	R4122386	R458632	R458632
23-122920-002[273]	2-7/8 "	R429218X	R429218X[39]	R406532	R4090070[40]	N/A[53]	-	R4577503	R4577503
23-122527-002[272]	2-7/8 "	R429218X	R429218X[39]	R406532	R4090070[40]	R4111993[302]	R4122386	R4577503	R4577503
23-123572-004[271]	2-7/8 "	R429218X	R429218X[39]	R406532	R4090070[40]	N/A[53]	-	R458632	R458632
23-123552-004[266]	2-7/8 "	R429218X	R429218X[39]	R406532	R4090070[40]	N/A[53]	-	R458632	R458632
R44141476[268]	2-7/8 "	R429218X	R429218X[39]	R406532	R4090070[40]	R4111993[302]	R4122386	R458632	R458632
R44141858[275]	2-7/8 "	R429218X	R429218X[39]	R406532	R4090070[40]	R4111993[302]	R4122386	R4577503	R4577503
23-123552-004[266]	2-7/8 "	R429218X	R429218X[39]	R406532	R4090070[40]	R4111993[302]	R4122386	R4577503	R4577503

272 - 6 Stud, U Shape

273 - 5 Stud, U Shape, .780 Dia. Studs

275 - 5 Stud, U Shape, .656 Dia. Studs

302 - Power Brakes, Dual System

MAKE MODEL YEAR AXLE CODE AXLE WEIGHT	AXLE & BRK. TYPE	BRK. MFG.	BRAKE SIZE	FMSI	MERITOR DISC PAD OR BRAKE SHOE	MERITOR GUIDE PIN OR RETURN SPRING KIT	MERITOR CALIPER HWD. KIT OR RETURN SPRING KIT	MERITOR ADJUSTER KIT (LEFT WHEEL)	MERITOR ADJUSTER KIT (RIGHT WHEEL)
ITE(Cont.)									
170, 1700, 1710, 1723, 1724, 1750, 1753, 1754 SERIES CONVENTIONAL CAB, SCHOOL BUS, TILT CAB(Cont.)									
1980 S1723, S1753 School Bus FA309, 329, 339	Fd	BX		7142 - D225	MD225	R40H5010	R40H5522	NR	NR
	Fd	BX		7142 - D225	MD225	R40H5010	R40H5522	NR	NR
	Fd	BX		7142 - D225	MD225	R40H5010	R40H5522	NR	NR
	Fd	BX		7142 - D225	MD225	R40H5010	R40H5522	NR	NR
	Fd	BX		7142 - D225	MD225	R40H5010	R40H5522	NR	NR
	Fd	BX		7142 - D225	MD225	R40H5010	R40H5522	NR	NR
	Fd	BX		7142 - D225	MD225	R40H5010	R40H5522	NR	NR
	Fd	BX		7142 - D225	MD225	R40H5010	R40H5522	NR	NR
	Fd	BX		7142 - D225	MD225	R40H5010	R40H5522	NR	NR
	Fd	BX		7142 - D225	MD225	R40H5010	R40H5522	NR	NR
	Fd	BX		7142 - D225	MD225	R40H5010	R40H5522	NR	NR
	Fd	BX		7142 - D225	MD225	R40H5010	R40H5522	NR	NR
	Fd	BX		7142 - D225	MD225	R40H5010	R40H5522	NR	NR
	Fd	BX		7142 - D225	MD225	R40H5010	R40H5522	NR	NR
	Fd	BX		7142 - D225	MD225	R40H5010	R40H5522	NR	NR
	Fd	BX		7142 - D225	MD225	R40H5010	R40H5522	NR	NR
	Fd	BX		7142 - D225	MD225	R40H5010	R40H5522	NR	NR
	Fd	BX		7142 - D225	MD225	R40H5010	R40H5522	NR	NR
	Fd	BX		7142 - D225	MD225	R40H5010	R40H5522	NR	NR
	Fd	BX		7142 - D225	MD225	R40H5010	R40H5522	NR	NR
	Fd	BX		7142 - D225	MD225	R40H5010	R40H5522	NR	NR
	Fd	BX		7142 - D225	MD225	R40H5010	R40H5522	NR	NR
	Fd	BX		7142 - D225	MD225	R40H5010	R40H5522	NR	NR
	Fd	BX		7142 - D225	MD225	R40H5010	R40H5522	NR	NR
	Fd	BX		7142 - D225	MD225	R40H5010	R40H5522	NR	NR
	Fd	BX		7142 - D225	MD225	R40H5010	R40H5522	NR	NR
	Fd	BX		7142 - D225	MD225	R40H5010	R40H5522	NR	NR
	Fd	BX		7142 - D225	MD225	R40H5010	R40H5522	NR	NR
	Fd	BX		7142 - D225	MD225	R40H5010	R40H5522	NR	NR
	Fd	BX		7142 - D225	MD225	R40H5010	R40H5522	NR	NR
	Fd	BX		7142 - D225	MD225	R40H5010	R40H5522	NR	NR
	Fd	BX		7142 - D225	MD225	R40H5010	R40H5522	NR	NR
	Fd	BX		7142 - D225	MD225	R40H5010	R40H5522	NR	NR
	Fd	BX		7142 - D225	MD225	R40H5010	R40H5522	NR	NR
	Fd	BX		7142 - D225	MD225	R40H5010	R40H5522	NR	NR
	Fd	BX		7142 - D225	MD225	R40H5010	R40H5522	NR	NR
	Fd	BX		7142 - D225	MD225	R40H5010	R40H5522	NR	NR
	Fd	BX		7142 - D225	MD225	R40H5010	R40H5522	NR	NR
	Fd	BX		7142 - D225	MD225	R40H5010	R40H5522	NR	NR
	Fd	BX		7142 - D225	MD225	R40H5010	R40H5522	NR	NR
	Fd	BX		7142 - D225	MD225	R40H5010	R40H5522	NR	NR
	Fd	BX		7142 - D225	MD225	R40H5010	R40H5522	NR	NR
	Fd	BX		7142 - D225	MD225	R40H5010	R40H5522	NR	NR
	Fd	BX		7142 - D225	MD225	R40H5010	R40H5522	NR	NR
	Fd	BX		7142 - D225	MD225	R40H5010	R40H5522	NR	NR
	Fd	BX		7142 - D225	MD225	R40H5010	R40H5522	NR	NR
	Fd	BX		7142 - D225	MD225	R40H5010	R40H5522	NR	NR
	Fd	BX		7142 - D225	MD225	R40H5010	R40H5522	NR	NR
	Fd	BX		7142 - D225	MD225	R40H5010	R40H5522	NR	NR
	Fd	BX		7142 - D225	MD225	R40H5010	R40H5522	NR	NR
	Fd	BX		7142 - D225	MD225	R40H5010	R40H5522	NR	NR
	Fd	BX		7142 - D225	MD225	R40H5010	R40H5522	NR	NR
	Fd	BX		7142 - D225	MD225	R40H5010	R40H5522	NR	NR
	Fd	BX		7142 - D225	MD225	R40H5010	R40H5522	NR	NR
	Fd	BX		7142 - D225	MD225	R40H5010	R40H5522	NR	NR
	Fd	BX		7142 - D225	MD225	R40H5010	R40H5522	NR	NR
	Fd	BX		7142 - D225	MD225	R40H5010	R40H5522	NR	NR
	Fd	BX		7142 - D225	MD225	R40H5010	R40H5522	NR	NR
	Fd	BX		7142 - D225	MD225	R40H5010	R40H5522	NR	NR
	Fd	BX		7142 - D225	MD225	R40H5010	R40H5522	NR	NR
	Fd	BX		7142 - D225	MD225	R40H5010	R40H5522	NR	NR
	Fd	BX		7142 - D225	MD225	R40H5010	R40H5522	NR	NR
	Fd	BX		7142 - D225	MD225	R40H5010	R40H5522	NR	NR
	Fd	BX		7142 - D225	MD225	R40H5010	R40H5522	NR	NR
	Fd	BX		7142 - D225	MD225	R40H5010	R40H5522	NR	NR

39 - First design, uses steel pistons.
266 - 10 Stud, Hat Shaped
272 - 6 Stud, U Shape

40 - For chrome plated steel version, use R4090070P
268 - 5 Stud, Hat Shape
273 - 5 Stud, U Shape, .780 Dia. Studs

53 - Power Brakes
271 - 6 Stud, Hat Shape
275 - 5 Stud, U Shape, .656 Dia. Studs

MERITOR DRUM OR ROTOR NO.	CALIPER OR CYLINDER BORE SIZE	MERITOR CALIPER OR WHEEL CYLINDER (LEFT)	MERITOR CALIPER OR WHEEL CYLINDER (RIGHT)	MERITOR CALIPER OR WHEEL CYLINDER REPAIR KIT	MERITOR CALIPER PISTON	MERITOR MASTER CYLINDER	MERITOR MASTER CYLINDER KIT	MERITOR BRAKE HOSE (LEFT)	MERITOR BRAKE HOSE (RIGHT)
									ITE(Cont.)
170, 1700, 1710, 1723, 1724, 1750, 1753, 1754 SERIES CONVENTIONAL CAB, SCHOOL BUS, TILT CAB(Cont.)									
23-123572-004[271]	2-7/8 "	R429218X	R429218X[39]	R406532	R4090070[40]	R4111993[302]	R4122386	R4577503	R4577503
R44141858[275]	2-7/8 "	R429218X	R429218X[39]	R406532	R4090070[40]	N/A[53]	-	R458632	R458632
23-122527-002[272]	2-7/8 "	R429218X	R429218X[39]	R406532	R4090070[40]	N/A[53]	-	R4577503	R4577503
23-123552-004[266]	2-7/8 "	R429218X	R429218X[39]	R406532	R4090070[40]	R4111993[302]	R4122386	R458632	R458632
23-123552-004[266]	2-7/8 "	R429218X	R429218X[39]	R406532	R4090070[40]	R4111993[302]	R4122386	R4577503	R4577503
R44141476[268]	2-7/8 "	R429218X	R429218X[39]	R406532	R4090070[40]	N/A[53]	-	R458632	R458632
23-123552-004[266]	2-7/8 "	R429218X	R429218X[39]	R406532	R4090070[40]	R4111993[302]	R4122386	R4577503	R4577503
R44141476[268]	2-7/8 "	R429218X	R429218X[39]	R406532	R4090070[40]	N/A[53]	-	R458632	R458632
23-122527-002[272]	2-7/8 "	R429218X	R429218X[39]	R406532	R4090070[40]	R4111993[302]	R4122386	R4577503	R4577503
23-122920-002[273]	2-7/8 "	R429218X	R429218X[39]	R406532	R4090070[40]	N/A[53]	-	R4577503	R4577503
23-122920-002[273]	2-7/8 "	R429218X	R429218X[39]	R406532	R4090070[40]	R4111993[302]	R4122386	R458632	R458632
23-122920-002[273]	2-7/8 "	R429218X	R429218X[39]	R406532	R4090070[40]	N/A[53]	-	R458632	R458632
23-122527-002[272]	2-7/8 "	R429218X	R429218X[39]	R406532	R4090070[40]	N/A[53]	-	R4577503	R4577503
R44141476[268]	2-7/8 "	R429218X	R429218X[39]	R406532	R4090070[40]	R4111993[302]	R4122386	R4577503	R4577503
23-122527-002[272]	2-7/8 "	R429218X	R429218X[39]	R406532	R4090070[40]	N/A[53]	-	R458632	R458632
23-122527-002[272]	2-7/8 "	R429218X	R429218X[39]	R406532	R4090070[40]	N/A[53]	-	R4577503	R4577503
23-122527-002[272]	2-7/8 "	R429218X	R429218X[39]	R406532	R4090070[40]	R4111993[302]	R4122386	R458632	R458632
R44141858[275]	2-7/8 "	R429218X	R429218X[39]	R406532	R4090070[40]	N/A[53]	-	R4577503	R4577503
R44141476[268]	2-7/8 "	R429218X	R429218X[39]	R406532	R4090070[40]	N/A[53]	-	R4577503	R4577503
R44141476[268]	2-7/8 "	R429218X	R429218X[39]	R406532	R4090070[40]	R4111993[302]	R4122386	R4577503	R4577503
R44141476[268]	2-7/8 "	R429218X	R429218X[39]	R406532	R4090070[40]	R4111993[302]	R4122386	R458632	R458632
23-123552-004[266]	2-7/8 "	R429218X	R429218X[39]	R406532	R4090070[40]	R4111993[302]	R4122386	R458632	R458632
R44141858[275]	2-7/8 "	R429218X	R429218X[39]	R406532	R4090070[40]	N/A[53]	-	R4577503	R4577503
23-123572-004[271]	2-7/8 "	R429218X	R429218X[39]	R406532	R4090070[40]	N/A[53]	-	R4577503	R4577503
23-123552-004[266]	2-7/8 "	R429218X	R429218X[39]	R406532	R4090070[40]	R4111993[302]	R4122386	R4577503	R4577503
R44141858[275]	2-7/8 "	R429218X	R429218X[39]	R406532	R4090070[40]	R4111993[302]	R4122386	R4577503	R4577503
23-123572-004[271]	2-7/8 "	R429218X	R429218X[39]	R406532	R4090070[40]	R4111993[302]	R4122386	R458632	R458632
R44141858[275]	2-7/8 "	R429218X	R429218X[39]	R406532	R4090070[40]	R4111993[302]	R4122386	R458632	R458632
R44141476[268]	2-7/8 "	R429218X	R429218X[39]	R406532	R4090070[40]	R4111993[302]	R4122386	R458632	R458632
23-122920-002[273]	2-7/8 "	R429218X	R429218X[39]	R406532	R4090070[40]	R4111993[302]	R4122386	R458632	R458632
23-123572-004[271]	2-7/8 "	R429218X	R429218X[39]	R406532	R4090070[40]	N/A[53]	-	R458632	R458632
23-123552-004[266]	2-7/8 "	R429218X	R429218X[39]	R406532	R4090070[40]	N/A[53]	-	R4577503	R4577503
23-122920-002[273]	2-7/8 "	R429218X	R429218X[39]	R406532	R4090070[40]	R4111993[302]	R4122386	R4577503	R4577503
23-122527-002[272]	2-7/8 "	R429218X	R429218X[39]	R406532	R4090070[40]	R4111993[302]	R4122386	R4577503	R4577503
23-122920-002[273]	2-7/8 "	R429218X	R429218X[39]	R406532	R4090070[40]	R4111993[302]	R4122386	R4577503	R4577503
23-123552-004[266]	2-7/8 "	R429218X	R429218X[39]	R406532	R4090070[40]	R4111993[302]	R4122386	R458632	R458632
23-122920-002[273]	2-7/8 "	R429218X	R429218X[39]	R406532	R4090070[40]	N/A[53]	-	R458632	R458632
R44141476[268]	2-7/8 "	R429218X	R429218X[39]	R406532	R4090070[40]	N/A[53]	-	R458632	R458632
23-122527-002[272]	2-7/8 "	R429218X	R429218X[39]	R406532	R4090070[40]	N/A[53]	-	R458632	R458632
R44141476[268]	2-7/8 "	R429218X	R429218X[39]	R406532	R4090070[40]	R4111993[302]	R4122386	R4577503	R4577503
R44141858[275]	2-7/8 "	R429218X	R429218X[39]	R406532	R4090070[40]	R4111993[302]	R4122386	R458632	R458632
23-123572-004[271]	2-7/8 "	R429218X	R429218X[39]	R406532	R4090070[40]	R4111993[302]	R4122386	R458632	R458632
R44141476[268]	2-7/8 "	R429218X	R429218X[39]	R406532	R4090070[40]	N/A[53]	-	R4577503	R4577503
23-123552-004[266]	2-7/8 "	R429218X	R429218X[39]	R406532	R4090070[40]	N/A[53]	-	R4577503	R4577503
23-122527-002[272]	2-7/8 "	R429218X	R429218X[39]	R406532	R4090070[40]	N/A[53]	-	R4577503	R4577503
R44141858[275]	2-7/8 "	R429218X	R429218X[39]	R406532	R4090070[40]	N/A[53]	-	R458632	R458632
23-122920-002[273]	2-7/8 "	R429218X	R429218X[39]	R406532	R4090070[40]	R4111993[302]	R4122386	R4577503	R4577503
23-123572-004[271]	2-7/8 "	R429218X	R429218X[39]	R406532	R4090070[40]	N/A[53]	-	R458632	R458632
23-123572-004[271]	2-7/8 "	R429218X	R429218X[39]	R406532	R4090070[40]	R4111993[302]	R4122386	R4577503	R4577503
23-122920-002[273]	2-7/8 "	R429218X	R429218X[39]	R406532	R4090070[40]	N/A[53]	-	R458632	R458632
23-123552-004[266]	2-7/8 "	R429218X	R429218X[39]	R406532	R4090070[40]	N/A[53]	-	R4577503	R4577503
23-122527-002[272]	2-7/8 "	R429218X	R429218X[39]	R406532	R4090070[40]	R4111993[302]	R4122386	R458632	R458632
23-122920-002[273]	2-7/8 "	R429218X	R429218X[39]	R406532	R4090070[40]	N/A[53]	-	R458632	R458632
R44141476[268]	2-7/8 "	R429218X	R429218X[39]	R406532	R4090070[40]	R4111993[302]	R4122386	R4577503	R4577503
R44141476[268]	2-7/8 "	R429218X	R429218X[39]	R406532	R4090070[40]	R4111993[302]	R4122386	R458632	R458632
23-122527-002[272]	2-7/8 "	R429218X	R429218X[39]	R406532	R4090070[40]	R4111993[302]	R4122386	R458632	R458632
23-123552-004[266]	2-7/8 "	R429218X	R429218X[39]	R406532	R4090070[40]	N/A[53]	-	R458632	R458632
23-123572-004[271]	2-7/8 "	R429218X	R429218X[39]	R406532	R4090070[40]	N/A[53]	-	R458632	R458632
23-123572-004[271]	2-7/8 "	R429218X	R429218X[39]	R406532	R4090070[40]	R4111993[302]	R4122386	R458632	R458632
R44141858[275]	2-7/8 "	R429218X	R429218X[39]	R406532	R4090070[40]	R4111993[302]	R4122386	R458632	R458632
23-123572-004[271]	2-7/8 "	R429218X	R429218X[39]	R406532	R4090070[40]	R4111993[302]	R4122386	R4577503	R4577503
23-123552-004[266]	2-7/8 "	R429218X	R429218X[39]	R406532	R4090070[40]	R4111993[302]	R4122386	R4577503	R4577503

302 - Power Brakes, Dual System

MAKE MODEL YEAR AXLE CODE AXLE WEIGHT	AXLE & BRK. TYPE	BRK. MFG.	BRAKE SIZE	FMSI	MERITOR DISC PAD OR BRAKE SHOE	MERITOR GUIDE PIN OR RETURN SPRING KIT	MERITOR CALIPER HWD. KIT OR RETURN SPRING KIT	MERITOR ADJUSTER KIT (LEFT WHEEL)	MERITOR ADJUSTER KIT (RIGHT WHEEL)
ITE(Cont.)									
170, 1700, 1710, 1723, 1724, 1750, 1753, 1754 SERIES CONVENTIONAL CAB, SCHOOL BUS, TILT CAB(Cont.)									
1980									
	Fd	BX		7142 - D225	MD225	R40H5010	R40H5522	NR	NR
	Fd	BX		7142 - D225	MD225	R40H5010	R40H5522	NR	NR
	Fd	BX		7142 - D225	MD225	R40H5010	R40H5522	NR	NR
	Fd	BX		7142 - D225	MD225	R40H5010	R40H5522	NR	NR
	Fd	BX		7142 - D225	MD225	R40H5010	R40H5522	NR	NR
	Fd	BX		7142 - D225	MD225	R40H5010	R40H5522	NR	NR
	Fd	BX		7142 - D225	MD225	R40H5010	R40H5522	NR	NR
	Fd	BX		7142 - D225	MD225	R40H5010	R40H5522	NR	NR
	Fd	BX		7142 - D225	MD225	R40H5010	R40H5522	NR	NR
	Fd	BX		7142 - D225	MD225	R40H5010	R40H5522	NR	NR
	Fd	BX		7142 - D225	MD225	R40H5010	R40H5522	NR	NR
	Fd	BX		7142 - D225	MD225	R40H5010	R40H5522	NR	NR
	Fd	BX		7142 - D225	MD225	R40H5010	R40H5522	NR	NR
	Fd	BX		7142 - D225	MD225	R40H5010	R40H5522	NR	NR
	Fd	BX		7142 - D225	MD225	R40H5010	R40H5522	NR	NR
	Fd	BX		7142 - D225	MD225	R40H5010	R40H5522	NR	NR
	Fd	BX		7142 - D225	MD225	R40H5010	R40H5522	NR	NR
	Fd	BX		7142 - D225	MD225	R40H5010	R40H5522	NR	NR
	Fd	BX		7142 - D225	MD225	R40H5010	R40H5522	NR	NR
	Fd	BX		7142 - D225	MD225	R40H5010	R40H5522	NR	NR
	Fd	BX		7142 - D225	MD225	R40H5010	R40H5522	NR	NR
	Fd	BX		7142 - D225	MD225	R40H5010	R40H5522	NR	NR
	Fd	BX		7142 - D225	MD225	R40H5010	R40H5522	NR	NR
	Fd	BX		7142 - D225	MD225	R40H5010	R40H5522	NR	NR
	Fd	BX		7142 - D225	MD225	R40H5010	R40H5522	NR	NR
	Fd	BX		7142 - D225	MD225	R40H5010	R40H5522	NR	NR
	Fd	BX		7142 - D225	MD225	R40H5010	R40H5522	NR	NR
	Fd	BX		7142 - D225	MD225	R40H5010	R40H5522	NR	NR
	Fd	BX		7142 - D225	MD225	R40H5010	R40H5522	NR	NR
	Fd	BX		7142 - D225	MD225	R40H5010	R40H5522	NR	NR
	Fd	BX		7142 - D225	MD225	R40H5010	R40H5522	NR	NR
	Fd	BX		7142 - D225	MD225	R40H5010	R40H5522	NR	NR
	Fd	BX		7142 - D225	MD225	R40H5010	R40H5522	NR	NR
	Fd	BX		7142 - D225	MD225	R40H5010	R40H5522	NR	NR
	Fd	BX		7142 - D225	MD225	R40H5010	R40H5522	NR	NR
	Fd	BX		7142 - D225	MD225	R40H5010	R40H5522	NR	NR
	Fd	BX		7142 - D225	MD225	R40H5010	R40H5522	NR	NR
	Fd	BX		7142 - D225	MD225	R40H5010	R40H5522	NR	NR
	Fd	BX		7142 - D225	MD225	R40H5010	R40H5522	NR	NR
	Fd	BX		7142 - D225	MD225	R40H5010	R40H5522	NR	NR
	Fd	BX		7142 - D225	MD225	R40H5010	R40H5522	NR	NR
	Fd	BX		7142 - D225	MD225	R40H5010	R40H5522	NR	NR
	Fd	BX		7142 - D225	MD225	R40H5010	R40H5522	NR	NR
	Fd	BX		7142 - D225	MD225	R40H5010	R40H5522	NR	NR
	Fd	BX		7142 - D225	MD225	R40H5010	R40H5522	NR	NR
	Fd	BX		7142 - D225	MD225	R40H5010	R40H5522	NR	NR
	Fd	BX		7142 - D225	MD225	R40H5010	R40H5522	NR	NR
	Fd	BX		7142 - D225	MD225	R40H5010	R40H5522	NR	NR
	Fd	BX		7142 - D225	MD225	R40H5010	R40H5522	NR	NR
	Fd	BX		7142 - D225	MD225	R40H5010	R40H5522	NR	NR
	Fd	BX		7142 - D225	MD225	R40H5010	R40H5522	NR	NR
	Fd	BX		7142 - D225	MD225	R40H5010	R40H5522	NR	NR
	Fd	BX		7142 - D225	MD225	R40H5010	R40H5522	NR	NR
	Fd	BX		7142 - D225	MD225	R40H5010	R40H5522	NR	NR
	Fd	BX		7142 - D225	MD225	R40H5010	R40H5522	NR	NR
	Fd	BX		7142 - D225	MD225	R40H5010	R40H5522	NR	NR
	Fd	BX		7142 - D225	MD225	R40H5010	R40H5522	NR	NR
	Fd	BX		7142 - D225	MD225	R40H5010	R40H5522	NR	NR
	Fd	BX		7142 - D225	MD225	R40H5010	R40H5522	NR	NR
	Fd	BX		7142 - D225	MD225	R40H5010	R40H5522	NR	NR
	Fd	BX		7142 - D225	MD225	R40H5010	R40H5522	NR	NR
	Fd	BX		7142 - D225	MD225	R40H5010	R40H5522	NR	NR
	Fd	BX		7142 - D225	MD225	R40H5010	R40H5522	NR	NR
	Fd	BX		7142 - D225	MD225	R40H5010	R40H5522	NR	NR
	Fd	BX		7142 - D225	MD225	R40H5010	R40H5522	NR	NR
	Fd	BX		7142 - D225	MD225	R40H5010	R40H5522	NR	NR
	Fd	BX		7142 - D225	MD225	R40H5010	R40H5522	NR	NR

39 - First design, uses steel pistons.
40 - For chrome plated steel version, use R4090070P
53 - Power Brakes
266 - 10 Stud, Hat Shaped
268 - 5 Stud, Hat Shape
271 - 6 Stud, Hat Shape
272 - 6 Stud, U Shape
273 - 5 Stud, U Shape, .780 Dia. Studs
275 - 5 Stud, U Shape, .656 Dia. Studs

MERITOR DRUM OR ROTOR NO.	CALIPER OR CYLINDER BORE SIZE	MERITOR CALIPER OR WHEEL CYLINDER (LEFT)	MERITOR CALIPER OR WHEEL CYLINDER (RIGHT)	MERITOR CALIPER OR WHEEL CYLINDER REPAIR KIT	MERITOR CALIPER PISTON	MERITOR MASTER CYLINDER	MERITOR MASTER CYLINDER KIT	MERITOR BRAKE HOSE (LEFT)	MERITOR BRAKE HOSE (RIGHT)
									ITE(Cont.)
170, 1700, 1710, 1723, 1724, 1750, 1753, 1754 SERIES CONVENTIONAL CAB, SCHOOL BUS, TILT CAB(Cont.)									
R44141858[275]	2-7/8 "	R429218X	R429218X[39]	R406532	R4090070[40]	N/A[53]	-	R4577503	R4577503
R44141476[268]	2-7/8 "	R429218X	R429218X[39]	R406532	R4090070[40]	N/A[53]	-	R4577503	R4577503
23-122527-002[272]	2-7/8 "	R429218X	R429218X[39]	R406532	R4090070[40]	N/A[53]	-	R4577503	R4577503
R44141858[275]	2-7/8 "	R429218X	R429218X[39]	R406532	R4090070[40]	R4111993[302]	R4122386	R4577503	R4577503
23-122920-002[273]	2-7/8 "	R429218X	R429218X[39]	R406532	R4090070[40]	N/A[53]	-	R458632	R458632
23-123552-004[266]	2-7/8 "	R429218X	R429218X[39]	R406532	R4090070[40]	R4111993[302]	R4122386	R4577503	R4577503
23-122527-002[272]	2-7/8 "	R429218X	R429218X[39]	R406532	R4090070[40]	N/A[53]	-	R458632	R458632
23-122527-002[272]	2-7/8 "	R429218X	R429218X[39]	R406532	R4090070[40]	R4111993[302]	R4122386	R458632	R458632
R44141476[268]	2-7/8 "	R429218X	R429218X[39]	R406532	R4090070[40]	R4111993[302]	R4122386	R458632	R458632
23-122920-002[273]	2-7/8 "	R429218X	R429218X[39]	R406532	R4090070[40]	N/A[53]	-	R458632	R458632
23-122527-002[272]	2-7/8 "	R429218X	R429218X[39]	R406532	R4090070[40]	R4111993[302]	R4122386	R4577503	R4577503
23-122920-002[273]	2-7/8 "	R429218X	R429218X[39]	R406532	R4090070[40]	R4111993[302]	R4122386	R4577503	R4577503
R44141476[268]	2-7/8 "	R429218X	R429218X[39]	R406532	R4090070[40]	N/A[53]	-	R4577503	R4577503
23-122527-002[272]	2-7/8 "	R429218X	R429218X[39]	R406532	R4090070[40]	R4111993[302]	R4122386	R458632	R458632
23-122920-002[273]	2-7/8 "	R429218X	R429218X[39]	R406532	R4090070[40]	R4111993[302]	R4122386	R458632	R458632
R44141476[268]	2-7/8 "	R429218X	R429218X[39]	R406532	R4090070[40]	R4111993[302]	R4122386	R458632	R458632
23-123552-004[266]	2-7/8 "	R429218X	R429218X[39]	R406532	R4090070[40]	R4111993[302]	R4122386	R458632	R458632
23-122527-002[272]	2-7/8 "	R429218X	R429218X[39]	R406532	R4090070[40]	N/A[53]	-	R458632	R458632
23-122920-002[273]	2-7/8 "	R429218X	R429218X[39]	R406532	R4090070[40]	N/A[53]	-	R4577503	R4577503
23-123552-004[266]	2-7/8 "	R429218X	R429218X[39]	R406532	R4090070[40]	N/A[53]	-	R4577503	R4577503
R44141858[275]	2-7/8 "	R429218X	R429218X[39]	R406532	R4090070[40]	N/A[53]	-	R4577503	R4577503
R44141476[268]	2-7/8 "	R429218X	R429218X[39]	R406532	R4090070[40]	N/A[53]	-	R458632	R458632
23-123572-004[271]	2-7/8 "	R429218X	R429218X[39]	R406532	R4090070[40]	N/A[53]	-	R4577503	R4577503
23-122920-002[273]	2-7/8 "	R429218X	R429218X[39]	R406532	R4090070[40]	R4111993[302]	R4122386	R4577503	R4577503
23-122527-002[272]	2-7/8 "	R429218X	R429218X[39]	R406532	R4090070[40]	R4111993[302]	R4122386	R4577503	R4577503
R44141858[275]	2-7/8 "	R429218X	R429218X[39]	R406532	R4090070[40]	R4111993[302]	R4122386	R4577503	R4577503
R44141476[268]	2-7/8 "	R429218X	R429218X[39]	R406532	R4090070[40]	R4111993[302]	R4122386	R4577503	R4577503
R44141858[275]	2-7/8 "	R429218X	R429218X[39]	R406532	R4090070[40]	R4111993[302]	R4122386	R458632	R458632
23-122527-002[272]	2-7/8 "	R429218X	R429218X[39]	R406532	R4090070[40]	N/A[53]	-	R458632	R458632
23-123552-004[266]	2-7/8 "	R429218X	R429218X[39]	R406532	R4090070[40]	N/A[53]	-	R458632	R458632
23-122920-002[273]	2-7/8 "	R429218X	R429218X[39]	R406532	R4090070[40]	N/A[53]	-	R4577503	R4577503
R44141858[275]	2-7/8 "	R429218X	R429218X[39]	R406532	R4090070[40]	R4111993[302]	R4122386	R458632	R458632
R44141858[275]	2-7/8 "	R429218X	R429218X[39]	R406532	R4090070[40]	R4111993[302]	R4122386	R4577503	R4577503
23-123572-004[271]	2-7/8 "	R429218X	R429218X[39]	R406532	R4090070[40]	R4111993[302]	R4122386	R458632	R458632
23-123552-004[266]	2-7/8 "	R429218X	R429218X[39]	R406532	R4090070[40]	N/A[53]	-	R458632	R458632
R44141858[275]	2-7/8 "	R429218X	R429218X[39]	R406532	R4090070[40]	N/A[53]	-	R4577503	R4577503
23-123572-004[271]	2-7/8 "	R429218X	R429218X[39]	R406532	R4090070[40]	N/A[53]	-	R458632	R458632
23-123572-004[271]	2-7/8 "	R429218X	R429218X[39]	R406532	R4090070[40]	N/A[53]	-	R4577503	R4577503
23-122920-002[273]	2-7/8 "	R429218X	R429218X[39]	R406532	R4090070[40]	R4111993[302]	R4122386	R458632	R458632
R44141858[275]	2-7/8 "	R429218X	R429218X[39]	R406532	R4090070[40]	R4111993[302]	R4122386	R4577503	R4577503
23-123572-004[271]	2-7/8 "	R429218X	R429218X[39]	R406532	R4090070[40]	N/A[53]	-	R458632	R458632
23-123572-004[271]	2-7/8 "	R429218X	R429218X[39]	R406532	R4090070[40]	N/A[53]	-	R4577503	R4577503
23-122920-002[273]	2-7/8 "	R429218X	R429218X[39]	R406532	R4090070[40]	N/A[53]	-	R4577503	R4577503
23-123572-004[271]	2-7/8 "	R429218X	R429218X[39]	R406532	R4090070[40]	R4111993[302]	R4122386	R458632	R458632
R44141476[268]	2-7/8 "	R429218X	R429218X[39]	R406532	R4090070[40]	N/A[53]	-	R458632	R458632
23-122920-002[273]	2-7/8 "	R429218X	R429218X[39]	R406532	R4090070[40]	N/A[53]	-	R4577503	R4577503
23-122920-002[273]	2-7/8 "	R429218X	R429218X[39]	R406532	R4090070[40]	R4111993[302]	R4122386	R458632	R458632
R44141476[268]	2-7/8 "	R429218X	R429218X[39]	R406532	R4090070[40]	N/A[53]	-	R4577503	R4577503
R44141476[268]	2-7/8 "	R429218X	R429218X[39]	R406532	R4090070[40]	N/A[53]	-	R458632	R458632
R44141858[275]	2-7/8 "	R429218X	R429218X[39]	R406532	R4090070[40]	R4111993[302]	R4122386	R458632	R458632
23-123552-004[266]	2-7/8 "	R429218X	R429218X[39]	R406532	R4090070[40]	N/A[53]	-	R458632	R458632
23-123572-004[271]	2-7/8 "	R429218X	R429218X[39]	R406532	R4090070[40]	N/A[53]	-	R4577503	R4577503
23-123572-004[271]	2-7/8 "	R429218X	R429218X[39]	R406532	R4090070[40]	R4111993[302]	R4122386	R458632	R458632
R44141858[275]	2-7/8 "	R429218X	R429218X[39]	R406532	R4090070[40]	N/A[53]	-	R458632	R458632
23-122527-002[272]	2-7/8 "	R429218X	R429218X[39]	R406532	R4090070[40]	N/A[53]	-	R4577503	R4577503
23-123552-004[266]	2-7/8 "	R429218X	R429218X[39]	R406532	R4090070[40]	R4111993[302]	R4122386	R458632	R458632
23-123552-004[266]	2-7/8 "	R429218X	R429218X[39]	R406532	R4090070[40]	N/A[53]	-	R458632	R458632
R44141476[268]	2-7/8 "	R429218X	R429218X[39]	R406532	R4090070[40]	N/A[53]	-	R4577503	R4577503
23-122527-002[272]	2-7/8 "	R429218X	R429218X[39]	R406532	R4090070[40]	R4111993[302]	R4122386	R4577503	R4577503
23-122920-002[273]	2-7/8 "	R429218X	R429218X[39]	R406532	R4090070[40]	R4111993[302]	R4122386	R4577503	R4577503
R44141476[268]	2-7/8 "	R429218X	R429218X[39]	R406532	R4090070[40]	R4111993[302]	R4122386	R4577503	R4577503
23-123572-004[271]	2-7/8 "	R429218X	R429218X[39]	R406532	R4090070[40]	R4111993[302]	R4122386	R4577503	R4577503
23-123572-004[271]	2-7/8 "	R429218X	R429218X[39]	R406532	R4090070[40]	R4111993[302]	R4122386	R4577503	R4577503

302 - Power Brakes, Dual System

MAKE MODEL YEAR AXLE CODE AXLE WEIGHT	AXLE & BRK. TYPE	BRK. MFG.	BRAKE SIZE	FMSI	MERITOR DISC PAD OR BRAKE SHOE	MERITOR GUIDE PIN OR RETURN SPRING KIT	MERITOR CALIPER HWD. KIT OR RETURN SPRING KIT	MERITOR ADJUSTER KIT (LEFT WHEEL)	MERITOR ADJUSTER KIT (RIGHT WHEEL)
ITE(Cont.)									
170, 1700, 1710, 1723, 1724, 1750, 1753, 1754 SERIES CONVENTIONAL CAB, SCHOOL BUS, TILT CAB(Cont.)									
1980									
	Fd	BX		7142 - D225	MD225	R40H5010	R40H5522	NR	NR
	Fd	BX		7142 - D225	MD225	R40H5010	R40H5522	NR	NR
	Fd	BX		7142 - D225	MD225	R40H5010	R40H5522	NR	NR
	Fd	BX		7142 - D225	MD225	R40H5010	R40H5522	NR	NR
	Fd	BX		7142 - D225	MD225	R40H5010	R40H5522	NR	NR
	Fd	BX		7142 - D225	MD225	R40H5010	R40H5522	NR	NR
S1723, S1753 School Bus FA73									
	Fd	BX		7108 - D184	MD184	R40H5010	R40H5519	NR	NR
	Fd	BX		7108 - D184	MD184	R40H5010	R40H5519	NR	NR
	Fd	BX		7108 - D184	MD184	R40H5010	R40H5519	NR	NR
	Fd	BX		7108 - D184	MD184	R40H5010	R40H5519	NR	NR
	Fd	BX		7108 - D184	MD184	R40H5010	R40H5519	NR	NR
	Fd	BX		7108 - D184	MD184	R40H5010	R40H5519	NR	NR
	Fd	BX		7108 - D184	MD184	R40H5010	R40H5519	NR	NR
	Fd	BX		7108 - D184	MD184	R40H5010	R40H5519	NR	NR
S1723, S1753 School Bus RA29, 30, 42, 44									
	Rd	BX		7142 - D225	MD225	R40H5010	R40H5522	NR	NR
	Rd	BX		7142 - D225	MD225	R40H5010	R40H5522	NR	NR
	Rd	BX		7108 - D184	MD184	R40H5010	R40H5519	NR	NR
	Rd	BX		7142 - D225	MD225	R40H5010	R40H5522	NR	NR
	Rd	BX		7142 - D225	MD225	R40H5010	R40H5522	NR	NR
	Rd	BX		7142 - D225	MD225	R40H5010	R40H5522	NR	NR
	Rd	BX		7108 - D184	MD184	R40H5010	R40H5519	NR	NR
	Rd	BX		7142 - D225	MD225	R40H5010	R40H5522	NR	NR
	Rd	BX		7108 - D184	MD184	R40H5010	R40H5519	NR	NR
	Rd	BX		7142 - D225	MD225	R40H5010	R40H5522	NR	NR
	Rd	BX		7108 - D184	MD184	R40H5010	R40H5519	NR	NR
	Rd	BX		7142 - D225	MD225	R40H5010	R40H5522	NR	NR
	Rd	BX		7142 - D225	MD225	R40H5010	R40H5522	NR	NR
	Rd	BX		7108 - D184	MD184	R40H5010	R40H5519	NR	NR
	Rd	BX		7142 - D225	MD225	R40H5010	R40H5522	NR	NR
	Rd	BX		7142 - D225	MD225	R40H5010	R40H5522	NR	NR
	Rd	BX		7142 - D225	MD225	R40H5010	R40H5522	NR	NR
	Rd	BX		7142 - D225	MD225	R40H5010	R40H5522	NR	NR
	Rd	BX		7108 - D184	MD184	R40H5010	R40H5519	NR	NR
	Rd	BX		7142 - D225	MD225	R40H5010	R40H5522	NR	NR
	Rd	BX		7142 - D225	MD225	R40H5010	R40H5522	NR	NR
	Rd	BX		7142 - D225	MD225	R40H5010	R40H5522	NR	NR
	Rd	BX		7142 - D225	MD225	R40H5010	R40H5522	NR	NR
	Rd	BX		7108 - D184	MD184	R40H5010	R40H5519	NR	NR
	Rd	BX		7142 - D225	MD225	R40H5010	R40H5522	NR	NR
	Rd	BX		7108 - D184	MD184	R40H5010	R40H5519	NR	NR
	Rd	BX		7142 - D225	MD225	R40H5010	R40H5522	NR	NR
	Rd	BX		7142 - D225	MD225	R40H5010	R40H5522	NR	NR
	Rd	BX		7108 - D184	MD184	R40H5010	R40H5519	NR	NR
	Rd	BX		7142 - D225	MD225	R40H5010	R40H5522	NR	NR
	Rd	BX		7108 - D184	MD184	R40H5010	R40H5519	NR	NR
	Rd	BX		7142 - D225	MD225	R40H5010	R40H5522	NR	NR
	Rd	BX		7108 - D184	MD184	R40H5010	R40H5519	NR	NR
	Rd	BX		7142 - D225	MD225	R40H5010	R40H5522	NR	NR
	Rd	BX		7108 - D184	MD184	R40H5010	R40H5519	NR	NR
	Rd	BX		7142 - D225	MD225	R40H5010	R40H5522	NR	NR
	Rd	BX		7108 - D184	MD184	R40H5010	R40H5519	NR	NR
	Rd	BX		7142 - D225	MD225	R40H5010	R40H5522	NR	NR
	Rd	BX		7142 - D225	MD225	R40H5010	R40H5522	NR	NR
	Rd	BX		7108 - D184	MD184	R40H5010	R40H5519	NR	NR
	Rd	BX		7142 - D225	MD225	R40H5010	R40H5522	NR	NR
	Rd	BX		7142 - D225	MD225	R40H5010	R40H5522	NR	NR
	Rd	BX		7108 - D184	MD184	R40H5010	R40H5519	NR	NR
	Rd	BX		7142 - D225	MD225	R40H5010	R40H5522	NR	NR
	Rd	BX		7108 - D184	MD184	R40H5010	R40H5519	NR	NR
	Rd	BX		7108 - D184	MD184	R40H5010	R40H5519	NR	NR
	Rd	BX		7108 - D184	MD184	R40H5010	R40H5519	NR	NR
	Rd	BX		7142 - D225	MD225	R40H5010	R40H5522	NR	NR
	Rd	BX		7142 - D225	MD225	R40H5010	R40H5522	NR	NR

37 - Also available as a New unit

38 - First design, may have external joining tube and uses steel pistons

39 - First design, uses steel pistons.

40 - For chrome plated steel version, use R4090070P

52 - 18" Length

53 - Power Brakes

201 - Steel Piston

266 - 10 Stud, Hat Shaped

267 - 10 Stud, U Shaped

MERITOR DRUM OR ROTOR NO.	CALIPER OR CYLINDER BORE SIZE	MERITOR CALIPER OR WHEEL CYLINDER (LEFT)	MERITOR CALIPER OR WHEEL CYLINDER (RIGHT)	MERITOR CALIPER OR WHEEL CYLINDER REPAIR KIT	MERITOR CALIPER PISTON	MERITOR MASTER CYLINDER	MERITOR MASTER CYLINDER KIT	MERITOR BRAKE HOSE (LEFT)	MERITOR BRAKE HOSE (RIGHT)
									ITE(Cont.)
170, 1700, 1710, 1723, 1724, 1750, 1753, 1754 SERIES CONVENTIONAL CAB, SCHOOL BUS, TILT CAB(Cont.)									
23-123552-004[266]	2-7/8 "	R429218X	R429218X[39]	R406532	R4090070[40]	N/A[53]	-	R4577503	R4577503
R44141858[275]	2-7/8 "	R429218X	R429218X[39]	R406532	R4090070[40]	N/A[53]	-	R458632	R458632
23-123572-004[271]	2-7/8 "	R429218X	R429218X[39]	R406532	R4090070[40]	R4111993[302]	R4122386	R4577503	R4577503
R44141858[275]	2-7/8 "	R429218X	R429218X[39]	R406532	R4090070[40]	N/A[53]	-	R458632	R458632
23-123552-004[266]	2-7/8 "	R429218X	R429218X[39]	R406532	R4090070[40]	R4111993[302]	R4122386	R458632	R458632
23-123552-004[266]	2-7/8 "	R429218X	R429218X[39]	R406532	R4090070[40]	N/A[53]	-	R4577503	R4577503
23-122527-002[272]	3-3/8 "	R42R55099	R42R55098[37]	R4066780	R4090021[201]	N/A[53]	-	R458632	R458632
23-122527-002[272]	3-3/8 "	R42R55099	R42R55098[37]	R4066780	R4090021[201]	N/A[53]	-	R4577503	R4577503
23-122527-002[272]	3-3/8 "	R42R55099	R42R55098[37]	R4066780	R4090021[201]	N/A[53]	-	R4577503	R4577503
23-122527-002[272]	3-3/8 "	R42R55099	R42R55098[37]	R4066780	R4090021[201]	R4111993[302]	R4122386	R4577503	R4577503
23-122527-002[272]	3-3/8 "	R42R55099	R42R55098[37]	R4066780	R4090021[201]	R4111993[302]	R4122386	R4577503	R4577503
23-122527-002[272]	3-3/8 "	R42R55099	R42R55098[37]	R4066780	R4090021[201]	R4111993[302]	R4122386	R458632	R458632
23-122527-002[272]	3-3/8 "	R42R55099	R42R55098[37]	R4066780	R4090021[201]	R4111993[302]	R4122386	R458632	R458632
23-122527-002[272]	3-3/8 "	R42R55099	R42R55098[37]	R4066780	R4090021[201]	N/A[53]	-	R458632	R458632
23-122527-002[272]	2-7/8 "	R429218X	R429218X[39]	R406532	R4090070[40]	-	-	R458634[52]	R458634
R44141628[269]	2-7/8 "	R429218X	R429218X[39]	R406532	R4090070[40]	-	-	R458634[52]	R458634
23-123572-004[271]	2-19/32 "	R42R55245	R42R55245[38]	R402235118	R402238231[201]	-	-	R458634[52]	R458634
R44141629[269]	2-7/8 "	R429218X	R429218X[39]	R406532	R4090070[40]	-	-	R458634[52]	R458634
23-123572-004[271]	2-7/8 "	R429218X	R429218X[39]	R406532	R4090070[40]	-	-	R458634[52]	R458634
23-122527-002[272]	2-7/8 "	R429218X	R429218X[39]	R406532	R4090070[40]	-	-	R458634[52]	R458634
R44141608[267]	2-19/32 "	R42R55245	R42R55245[38]	R402235118	R402238231[201]	-	-	R458634[52]	R458634
R44141629[269]	2-7/8 "	R429218X	R429218X[39]	R406532	R4090070[40]	-	-	R458634[52]	R458634
R44141628[269]	2-19/32 "	R42R55245	R42R55245[38]	R402235118	R402238231[201]	-	-	R458634[52]	R458634
R44141627[270]	2-7/8 "	R429218X	R429218X[39]	R406532	R4090070[40]	-	-	R458634[52]	R458634
23-123552-004[266]	2-19/32 "	R42R55245	R42R55245[38]	R402235118	R402238231[201]	-	-	R458634[52]	R458634
23-123552-004[266]	2-7/8 "	R429218X	R429218X[39]	R406532	R4090070[40]	-	-	R458634[52]	R458634
R44141627[270]	2-7/8 "	R429218X	R429218X[39]	R406532	R4090070[40]	-	-	R458634[52]	R458634
R44141629[269]	2-19/32 "	R42R55245	R42R55245[38]	R402235118	R402238231[201]	-	-	R458634[52]	R458634
23-123552-004[266]	2-7/8 "	R429218X	R429218X[39]	R406532	R4090070[40]	-	-	R458634[52]	R458634
R44141629[269]	2-7/8 "	R429218X	R429218X[39]	R406532	R4090070[40]	-	-	R458634[52]	R458634
23-122527-002[272]	2-7/8 "	R429218X	R429218X[39]	R406532	R4090070[40]	-	-	R458634[52]	R458634
23-122527-002[272]	2-7/8 "	R429218X	R429218X[39]	R406532	R4090070[40]	-	-	R458634[52]	R458634
R44141628[269]	2-19/32 "	R42R55245	R42R55245[38]	R402235118	R402238231[201]	-	-	R458634[52]	R458634
R44141608[267]	2-7/8 "	R429218X	R429218X[39]	R406532	R4090070[40]	-	-	R458634[52]	R458634
R44141627[270]	2-7/8 "	R429218X	R429218X[39]	R406532	R4090070[40]	-	-	R458634[52]	R458634
R44141627[270]	2-7/8 "	R429218X	R429218X[39]	R406532	R4090070[40]	-	-	R458634[52]	R458634
23-123572-004[271]	2-7/8 "	R429218X	R429218X[39]	R406532	R4090070[40]	-	-	R458634[52]	R458634
23-123552-004[266]	2-19/32 "	R42R55245	R42R55245[38]	R402235118	R402238231[201]	-	-	R458634[52]	R458634
R44141628[269]	2-7/8 "	R429218X	R429218X[39]	R406532	R4090070[40]	-	-	R458634[52]	R458634
R44141627[270]	2-19/32 "	R42R55245	R42R55245[38]	R402235118	R402238231[201]	-	-	R458634[52]	R458634
23-122527-002[272]	2-7/8 "	R429218X	R429218X[39]	R406532	R4090070[40]	-	-	R458634[52]	R458634
23-123572-004[271]	2-7/8 "	R429218X	R429218X[39]	R406532	R4090070[40]	-	-	R458634[52]	R458634
R44141628[269]	2-19/32 "	R42R55245	R42R55245[38]	R402235118	R402238231[201]	-	-	R458634[52]	R458634
23-123552-004[266]	2-7/8 "	R429218X	R429218X[39]	R406532	R4090070[40]	-	-	R458634[52]	R458634
23-123572-004[271]	2-19/32 "	R42R55245	R42R55245[38]	R402235118	R402238231[201]	-	-	R458634[52]	R458634
23-123572-004[271]	2-7/8 "	R429218X	R429218X[39]	R406532	R4090070[40]	-	-	R458634[52]	R458634
23-123552-004[266]	2-19/32 "	R42R55245	R42R55245[38]	R402235118	R402238231[201]	-	-	R458634[52]	R458634
R44141628[269]	2-7/8 "	R429218X	R429218X[39]	R406532	R4090070[40]	-	-	R458634[52]	R458634
R44141629[269]	2-19/32 "	R42R55245	R42R55245[38]	R402235118	R402238231[201]	-	-	R458634[52]	R458634
23-123572-004[271]	2-7/8 "	R429218X	R429218X[39]	R406532	R4090070[40]	-	-	R458634[52]	R458634
23-123572-004[271]	2-7/8 "	R429218X	R429218X[39]	R406532	R4090070[40]	-	-	R458634[52]	R458634
R44141629[269]	2-19/32 "	R42R55245	R42R55245[38]	R402235118	R402238231[201]	-	-	R458634[52]	R458634
R44141627[270]	2-7/8 "	R429218X	R429218X[39]	R406532	R4090070[40]	-	-	R458634[52]	R458634
R44141628[269]	2-7/8 "	R429218X	R429218X[39]	R406532	R4090070[40]	-	-	R458634[52]	R458634
R44141627[270]	2-19/32 "	R42R55245	R42R55245[38]	R402235118	R402238231[201]	-	-	R458634[52]	R458634
R44141608[267]	2-7/8 "	R429218X	R429218X[39]	R406532	R4090070[40]	-	-	R458634[52]	R458634
23-123572-004[271]	2-19/32 "	R42R55245	R42R55245[38]	R402235118	R402238231[201]	-	-	R458634[52]	R458634
R44141628[269]	2-19/32 "	R42R55245	R42R55245[38]	R402235118	R402238231[201]	-	-	R458634[52]	R458634
R44141608[267]	2-19/32 "	R42R55245	R42R55245[38]	R402235118	R402238231[201]	-	-	R458634[52]	R458634
23-123552-004[266]	2-7/8 "	R429218X	R429218X[39]	R406532	R4090070[40]	-	-	R458634[52]	R458634
R44141629[269]	2-7/8 "	R429218X	R429218X[39]	R406532	R4090070[40]	-	-	R458634[52]	R458634

269 - 5 Stud, U Shape

270 - 5 Stud, U Shape, .766 Dia. Studs

271 - 6 Stud, Hat Shape

272 - 6 Stud, U Shape

275 - 5 Stud, U Shape, .656 Dia. Studs

302 - Power Brakes, Dual System

MAKE MODEL YEAR AXLE CODE AXLE WEIGHT	AXLE & BRK. TYPE	BRK. MFG.	BRAKE SIZE	FMSI	MERITOR DISC PAD OR BRAKE SHOE	MERITOR GUIDE PIN OR RETURN SPRING KIT	MERITOR CALIPER HWD. KIT OR RETURN SPRING KIT	MERITOR ADJUSTER KIT (LEFT WHEEL)	MERITOR ADJUSTER KIT (RIGHT WHEEL)
ITE(Cont.)									
170, 1700, 1710, 1723, 1724, 1750, 1753, 1754 SERIES CONVENTIONAL CAB, SCHOOL BUS, TILT CAB(Cont.)									
1980									
	Rd	BX		7142 - D225	MD225	R40H5010	R40H5522	NR	NR
	Rd	BX		7108 - D184	MD184	R40H5010	R40H5519	NR	NR
	Rd	BX		7108 - D184	MD184	R40H5010	R40H5519	NR	NR
	Rd	BX		7142 - D225	MD225	R40H5010	R40H5522	NR	NR
	Rd	BX		7142 - D225	MD225	R40H5010	R40H5522	NR	NR
	Rd	BX		7142 - D225	MD225	R40H5010	R40H5522	NR	NR
	Rd	BX		7142 - D225	MD225	R40H5010	R40H5522	NR	NR
	Rd	BX		7108 - D184	MD184	R40H5010	R40H5519	NR	NR
	Rd	BX		7108 - D184	MD184	R40H5010	R40H5519	NR	NR
	Rd	BX		7142 - D225	MD225	R40H5010	R40H5522	NR	NR
	Rd	BX		7142 - D225	MD225	R40H5010	R40H5522	NR	NR
	Rd	BX		7108 - D184	MD184	R40H5010	R40H5519	NR	NR
	Rd	BX		7142 - D225	MD225	R40H5010	R40H5522	NR	NR
	Rd	BX		7142 - D225	MD225	R40H5010	R40H5522	NR	NR
	Rd	BX		7142 - D225	MD225	R40H5010	R40H5522	NR	NR
	Rd	BX		7142 - D225	MD225	R40H5010	R40H5522	NR	NR
	Rd	BX		7108 - D184	MD184	R40H5010	R40H5519	NR	NR
	Rd	BX		7108 - D184	MD184	R40H5010	R40H5519	NR	NR
	Rd	BX		7142 - D225	MD225	R40H5010	R40H5522	NR	NR
S1724, S1754 Conventional FA109, 208	Fa	WG	15 " x 3 "	1245C - 321	R700321	R40H521	R40H9237	R40H3502	R40H3503
	Fm	WG	15 " x 3 "	1245A - 235	R700235	R40H521	R40H9201	R40H3524	R40H3524
S1724, S1754 Conventional FA118, 127, 139	Fa	WG	15 " x 5 "	1345A - 491	N/A	R40H521	R40H9237	R40H3502	R40H3503
	Fm	WG	15 " x 5 "	1345 - 490	N/A	R40H521	R40H9201	R40H3524	R40H3524
S1724, S1754 Conventional FA208	Fa	WG	15 " x 3-1/2 "	1280B - 322	R464004	R40H521	R40H9237	R40H3502	R40H3503
	Fm	WG	15 " x 3-1/2 "	1280 - 463	R700463	R40H521	R40H9201	R40H3524	R40H3524
S1724, S1754 Conventional FA48, 68, 70, 72	Fa	WG	14 " x 2-1/2 "	1294A - 325	N/A	R40H521	R40H9237	R40H3502	R40H3503
	Fm	WG	14 " x 2-1/2 "	1294 - 296	N/A	R40H521	R40H9201	R40H3524	R40H3524
S1724, S1754 Conventional FA71, 73, 101	Fa	WG	15 " x 3 "	1245C - 321	R700321	R40H521	R40H9237	R40H3502	R40H3503
	Fa	WG	15 " x 3-1/2 "	1280B - 322	R464004	R40H521	R40H9237	R40H3502	R40H3503
	Fm	WG	15 " x 3 "	1245A - 235	R700235	R40H521	R40H9201	R40H3524	R40H3524
	Fm	WG	15 " x 3-1/2 "	1280 - 463	R700463	R40H521	R40H9201	R40H3524	R40H3524
S1724, S1754 Conventional FA74	Fa	WG	15 " x 3 "	1245C - 321	R700321	R40H521	R40H9237	R40H3502	R40H3503
	Fm	WG	15 " x 3 "	1245A - 235	R700235	R40H521	R40H9201	R40H3524	R40H3524
S1724, S1754 Conventional FA78, 81	Fa	WG	15 " x 3 "	1245C - 321	R700321	R40H521	R40H9237	R40H3502	R40H3503
S1724, S1754 Conventional FA89, 91, 98	Fa	WG	15 " x 3 "	1245C - 321	R700321	R40H521	R40H9237	R40H3502	R40H3503
	Fm	WG	15 " x 3 "	1245A - 235	R700235	R40H521	R40H9201	R40H3524	R40H3524
S1724, S1754 Conventional RA184	Ra	WG	15 " x 4 "	4645A - 376	Discontinued	R40H597	R40H9200	R40H3540	R40H3541
	Rm	WG	15 " x 4 "	4645A - 376	Discontinued	R40H597	R40H9200	R40H3518	R404148
S1724, S1754 Conventional RA25, 184	Ra	WG	15 " x 5 "	1252 - 346	R700346	R40H597	R40H9200	R40H3540	R40H3541
	Rm	WG	15 " x 5 "	1252 - 346	R700346	R40H597	R40H9200	R40H3518	R404148
S1724, S1754 Conventional RA29, 30, 187	Ra	WG	15 " x 5 "	1252 - 346	R700346	R40H597	R40H9200	R40H3540	R40H3541
	Rm	WG	15 " x 5 "	1252 - 346	R700346	R40H597	R40H9200	R40H3518	R404148
S1724, S1754 Conventional RA30, 187	Ra	WG	16 " x 5 "	1254 - 385	N/A	R40H597	R40H9200	N/A	N/A
	Rm	WG	16 " x 5 "	1254 - 385	N/A	R40H597	R40H9200	R404149	R404150
S1724, S1754 Conventional RA30, 39, 44, 186, 189	Ra	WG	15 " x 6 "	4596 - 381	R700381	R40H597	R40H9200	R40H3540	R40H3541
	Rm	WG	15 " x 6 "	4596 - 381	R700381	R40H597	R40H9200	R40H3518	R404148
S1724, S1754 Conventional RA39, 199	Ra	WG	15 " x 7 "	4597 - 383	R700383	R40H597	R40H9200	R40H3540	R40H3541
	Rm	WG	15 " x 7 "	4597 - 383	R700383	R40H597	R40H9200	R40H3518	R404148

38 - First design, may have external joining tube and uses steel pistons
39 - First design, uses steel pistons.
40 - For chrome plated steel version, use R4090070P
52 - 18" Length
201 - Steel Piston
266 - 10 Stud, Hat Shaped
267 - 10 Stud, U Shaped
269 - 5 Stud, U Shape
270 - 5 Stud, U Shape, .766 Dia. Studs

MERITOR DRUM OR ROTOR NO.	CALIPER OR CYLINDER BORE SIZE	MERITOR CALIPER OR WHEEL CYLINDER (LEFT)	MERITOR CALIPER OR WHEEL CYLINDER (RIGHT)	MERITOR CALIPER OR WHEEL CYLINDER REPAIR KIT	MERITOR CALIPER PISTON	MERITOR MASTER CYLINDER	MERITOR MASTER CYLINDER KIT	MERITOR BRAKE HOSE (LEFT)	MERITOR BRAKE HOSE (RIGHT)
									ITE(Cont.)
170, 1700, 1710, 1723, 1724, 1750, 1753, 1754 SERIES CONVENTIONAL CAB, SCHOOL BUS, TILT CAB(Cont.)									
R44141608[267]	2-7/8 "	R429218X	R429218X[39]	R406532	R4090070[40]	-	-	R458634[52]	R458634
R44141608[267]	2-19/32 "	R42R55245	R42R55245[38]	R402235118	R402238231[201]	-	-	R458634[52]	R458634
23-123552-004[266]	2-19/32 "	R42R55245	R42R55245[38]	R402235118	R402238231[201]	-	-	R458634[52]	R458634
R44141608[267]	2-7/8 "	R429218X	R429218X[39]	R406532	R4090070[40]	-	-	R458634[52]	R458634
R44141628[269]	2-7/8 "	R429218X	R429218X[39]	R406532	R4090070[40]	-	-	R458634[52]	R458634
R44141628[269]	2-7/8 "	R429218X	R429218X[39]	R406532	R4090070[40]	-	-	R458634[52]	R458634
R44141608[267]	2-7/8 "	R429218X	R429218X[39]	R406532	R4090070[40]	-	-	R458634[52]	R458634
R44141629[269]	2-19/32 "	R42R55245	R42R55245[38]	R402235118	R402238231[201]	-	-	R458634[52]	R458634
R44141608[267]	2-19/32 "	R42R55245	R42R55245[38]	R402235118	R402238231[201]	-	-	R458634[52]	R458634
23-123552-004[266]	2-7/8 "	R429218X	R429218X[39]	R406532	R4090070[40]	-	-	R458634[52]	R458634
R44141608[267]	2-7/8 "	R429218X	R429218X[39]	R406532	R4090070[40]	-	-	R458634[52]	R458634
23-123572-004[271]	2-19/32 "	R42R55245	R42R55245[38]	R402235118	R402238231[201]	-	-	R458634[52]	R458634
R44141627[270]	2-7/8 "	R429218X	R429218X[39]	R406532	R4090070[40]	-	-	R458634[52]	R458634
R44141629[269]	2-7/8 "	R429218X	R429218X[39]	R406532	R4090070[40]	-	-	R458634[52]	R458634
23-123552-004[266]	2-7/8 "	R429218X	R429218X[39]	R406532	R4090070[40]	-	-	R458634[52]	R458634
23-122527-002[272]	2-7/8 "	R429218X	R429218X[39]	R406532	R4090070[40]	-	-	R458634[52]	R458634
23-122527-002[272]	2-19/32 "	R42R55245	R42R55245[38]	R402235118	R402238231[201]	-	-	R458634[52]	R458634
23-122527-002[272]	2-19/32 "	R42R55245	R42R55245[38]	R402235118	R402238231[201]	-	-	R458634[52]	R458634
R44141629[269]	2-7/8 "	R429218X	R429218X[39]	R406532	R4090070[40]	-	-	R458634[52]	R458634
N/A	1-1/4 "	R4133581	R4133582	R4166923	NR	-	-	-	-
N/A	1-1/4 "	R4133581	R4133582	R4166923	NR	-	-	-	-
N/A		-	-	N/A	N/A	-	-	-	-
N/A		-	-	N/A	N/A	-	-	-	-
N/A	1-1/4 "	R4133581	R4133582	R4166923	NR	-	-	-	-
N/A	1-1/4 "	R4133581	R4133582	R4166923	NR	-	-	-	-
N/A	1-1/8 "	R4133714	R4133715	R4166926	NR	-	-	-	-
N/A	1-1/8 "	R4133714	R4133715	R4166926	NR	-	-	-	-
N/A	1-1/4 "	R4133581	R4133582	R4166923	NR	-	-	-	-
N/A	1-1/4 "	R4133581	R4133582	R4166923	NR	-	-	-	-
N/A	1-1/4 "	R4133581	R4133582	R4166923	NR	-	-	-	-
N/A	1-1/4 "	R4133581	R4133582	R4166923	NR	-	-	-	-
N/A	1-1/4 "	R4133581	R4133582	R4166923	NR	-	-	-	-
N/A	1-1/4 "	R4133581	R4133582	R4166923	NR	-	-	-	-
N/A	1-1/4 "	R4133581	R4133582	R4166923	NR	-	-	-	-
N/A	1-1/4 "	R4133581	R4133582	R4166923	NR	-	-	-	-
N/A	1-1/2 "	R4133580	R4133580	Discontinued	NR	-	-	-	-
N/A	1-1/2 "	R4133580	R4133580	Discontinued	NR	-	-	-	-
N/A	1-1/2 "	R4133580	R4133580	Discontinued	NR	-	-	-	-
N/A	1-1/2 "	R4133580	R4133580	Discontinued	NR	-	-	-	-
N/A	1-1/2 "	R4133580	R4133580	Discontinued	NR	-	-	-	-
N/A	1-1/2 "	R4133580	R4133580	Discontinued	NR	-	-	-	-
N/A	1-5/8 "	R4133338	R4133338	R4166689	NR	-	-	-	-
N/A	1-5/8 "	R4133338	R4133338	R4166689	NR	-	-	-	-
N/A	1-5/8 "	R4133338	R4133338	R4166689	NR	-	-	-	-
N/A	1-5/8 "	R4133338	R4133338	R4166689	NR	-	-	-	-
N/A	1-5/8 "	R4133338	R4133338	R4166689	NR	-	-	-	-
N/A	1-5/8 "	R4133338	R4133338	R4166689	NR	-	-	-	-

271 - 6 Stud, Hat Shape

272 - 6 Stud, U Shape

MAKE MODEL YEAR AXLE CODE AXLE WEIGHT	AXLE & BRK. TYPE	BRK. MFG.	BRAKE SIZE	FMSI	MERITOR DISC PAD OR BRAKE SHOE	MERITOR GUIDE PIN OR RETURN SPRING KIT	MERITOR CALIPER HWD. KIT OR RETURN SPRING KIT	MERITOR ADJUSTER KIT (LEFT WHEEL)	MERITOR ADJUSTER KIT (RIGHT WHEEL)
ITE(Cont.)									
170, 1700, 1710, 1723, 1724, 1750, 1753, 1754 SERIES CONVENTIONAL CAB, SCHOOL BUS, TILT CAB(Cont.)									
1980 S1724, S1754 Conventional RA44, 186	Ra	WG	15 " x 7 "	4597 - 383	R700383	R40H597	R40H9200	N/A	N/A
	Rm	WG	15 " x 7 "	4597 - 383	R700383	R40H597	R40H9200	R40H3518	R404148
S1724, S1754 Conventional RA47, 57	Ra	WG	16 " x 6 "	1255 - 386	N/A	R40H597	R40H9200	N/A	N/A
	Rm	WG	16 " x 6 "	1255 - 386	N/A	R40H597	R40H9200	R404149	R404150
1979 C1710, C1750 Cargostar Tilt Cab FA109, 208	Fa	WG	15 " x 3 "	1245C - 321	R700321	R40H521	R40H9237	R40H3502	R40H3503
	Fm	WG	15 " x 3 "	1245A - 235	R700235	R40H521	R40H9201	R40H3524	R40H3524
C1710, C1750 Cargostar Tilt Cab FA118, 127, 139	Fa	WG	15 " x 5 "	1345A - 491	N/A	R40H521	R40H9237	R40H3502	R40H3503
	Fm	WG	15 " x 5 "	1345 - 490	N/A	R40H521	R40H9201	R40H3524	R40H3524
C1710, C1750 Cargostar Tilt Cab FA208	Fa	WG	15 " x 3-1/2 "	1280B - 322	R464004	R40H521	R40H9237	R40H3502	R40H3503
	Fm	WG	15 " x 3-1/2 "	1280 - 463	R700463	R40H521	R40H9201	R40H3524	R40H3524
C1710, C1750 Cargostar Tilt Cab FA48, 68, 70, 72	Fa	WG	14 " x 2-1/2 "	1294A - 325	N/A	R40H521	R40H9237	R40H3502	R40H3503
	Fm	WG	14 " x 2-1/2 "	1294 - 296	N/A	R40H521	R40H9201	R40H3524	R40H3524
C1710, C1750 Cargostar Tilt Cab FA71, 73, 101	Fa	WG	15 " x 3 "	1245C - 321	R700321	R40H521	R40H9237	R40H3502	R40H3503
	Fa	WG	15 " x 3-1/2 "	1280B - 322	R464004	R40H521	R40H9237	R40H3502	R40H3503
	Fm	WG	15 " x 3 "	1245A - 235	R700235	R40H521	R40H9201	R40H3524	R40H3524
	Fm	WG	15 " x 3-1/2 "	1280 - 463	R700463	R40H521	R40H9201	R40H3524	R40H3524
C1710, C1750 Cargostar Tilt Cab FA74	Fa	WG	15 " x 3 "	1245C - 321	R700321	R40H521	R40H9237	R40H3502	R40H3503
	Fm	WG	15 " x 3 "	1245A - 235	R700235	R40H521	R40H9201	R40H3524	R40H3524
C1710, C1750 Cargostar Tilt Cab FA78, 81	Fa	WG	15 " x 3 "	1245C - 321	R700321	R40H521	R40H9237	R40H3502	R40H3503
C1710, C1750 Cargostar Tilt Cab FA89, 91, 98	Fa	WG	15 " x 3 "	1245C - 321	R700321	R40H521	R40H9237	R40H3502	R40H3503
	Fm	WG	15 " x 3 "	1245A - 235	R700235	R40H521	R40H9201	R40H3524	R40H3524
C1710, C1750 Cargostar Tilt Cab RA184	Ra	WG	15 " x 4 "	4645A - 376	Discontinued	R40H597	R40H9200	R40H3540	R40H3541
	Rm	WG	15 " x 4 "	4645A - 376	Discontinued	R40H597	R40H9200	R40H3518	R404148
C1710, C1750 Cargostar Tilt Cab RA25, 184	Ra	WG	15 " x 5 "	1252 - 346	R700346	R40H597	R40H9200	R40H3540	R40H3541
	Rm	WG	15 " x 5 "	1252 - 346	R700346	R40H597	R40H9200	R40H3518	R404148
C1710, C1750 Cargostar Tilt Cab RA29, 30, 187	Ra	WG	15 " x 5 "	1252 - 346	R700346	R40H597	R40H9200	R40H3540	R40H3541
	Rm	WG	15 " x 5 "	1252 - 346	R700346	R40H597	R40H9200	R40H3518	R404148
C1710, C1750 Cargostar Tilt Cab RA30, 187	Ra	WG	16 " x 5 "	1254 - 385	N/A	R40H597	R40H9200	N/A	N/A
	Rm	WG	16 " x 5 "	1254 - 385	N/A	R40H597	R40H9200	R404149	R404150
C1710, C1750 Cargostar Tilt Cab RA30, 39, 44, 186, 189	Ra	WG	15 " x 6 "	4596 - 381	R700381	R40H597	R40H9200	R40H3540	R40H3541
	Rm	WG	15 " x 6 "	4596 - 381	R700381	R40H597	R40H9200	R40H3518	R404148
C1710, C1750 Cargostar Tilt Cab RA39, 199	Ra	WG	15 " x 7 "	4597 - 383	R700383	R40H597	R40H9200	R40H3540	R40H3541

MERITOR DRUM OR ROTOR NO.	CALIPER OR CYLINDER BORE SIZE	MERITOR CALIPER OR WHEEL CYLINDER (LEFT)	MERITOR CALIPER OR WHEEL CYLINDER (RIGHT)	MERITOR CALIPER OR WHEEL CYLINDER REPAIR KIT	MERITOR CALIPER PISTON	MERITOR MASTER CYLINDER	MERITOR MASTER CYLINDER KIT	MERITOR BRAKE HOSE (LEFT)	MERITOR BRAKE HOSE (RIGHT)
									ITE(Cont.)
170, 1700, 1710, 1723, 1724, 1750, 1753, 1754 SERIES CONVENTIONAL CAB, SCHOOL BUS, TILT CAB(Cont.)									
N/A	1-5/8 "	R4133338	R4133338	R4166689	NR	-	-	-	-
N/A	1-5/8 "	R4133338	R4133338	R4166689	NR	-	-	-	-
N/A	1-3/4 "	R4133400	R4133400	R4166917	NR	-	-	-	-
N/A	1-3/4 "	R4133400	R4133400	R4166917	NR	-	-	-	-
N/A	1-1/4 "	R4133581	R4133582	R4166923	NR	-	-	-	-
N/A	1-1/4 "	R4133581	R4133582	R4166923	NR	-	-	-	-
N/A		-	-	N/A	N/A	-	-	-	-
N/A		-	-	N/A	N/A	-	-	-	-
N/A	1-1/4 "	R4133581	R4133582	R4166923	NR	-	-	-	-
N/A	1-1/4 "	R4133581	R4133582	R4166923	NR	-	-	-	-
N/A	1-1/8 "	R4133714	R4133715	R4166926	NR	-	-	-	-
N/A	1-1/8 "	R4133714	R4133715	R4166926	NR	-	-	-	-
N/A	1-1/4 "	R4133581	R4133582	R4166923	NR	-	-	-	-
N/A	1-1/4 "	R4133581	R4133582	R4166923	NR	-	-	-	-
N/A	1-1/4 "	R4133581	R4133582	R4166923	NR	-	-	-	-
N/A	1-1/4 "	R4133581	R4133582	R4166923	NR	-	-	-	-
N/A	1-1/4 "	R4133581	R4133582	R4166923	NR	-	-	-	-
N/A	1-1/4 "	R4133581	R4133582	R4166923	NR	-	-	-	-
N/A	1-1/4 "	R4133581	R4133582	R4166923	NR	-	-	-	-
N/A	1-1/4 "	R4133581	R4133582	R4166923	NR	-	-	-	-
N/A	1-1/4 "	R4133581	R4133582	R4166923	NR	-	-	-	-
N/A	1-1/4 "	R4133581	R4133582	R4166923	NR	-	-	-	-
N/A	1-1/2 "	R4133580	R4133580	Discontinued	NR	-	-	-	-
N/A	1-1/2 "	R4133580	R4133580	Discontinued	NR	-	-	-	-
N/A	1-1/2 "	R4133580	R4133580	Discontinued	NR	-	-	-	-
N/A	1-1/2 "	R4133580	R4133580	Discontinued	NR	-	-	-	-
N/A	1-1/2 "	R4133580	R4133580	Discontinued	NR	-	-	-	-
N/A	1-1/2 "	R4133580	R4133580	Discontinued	NR	-	-	-	-
N/A	1-5/8 "	R4133338	R4133338	R4166689	NR	-	-	-	-
N/A	1-5/8 "	R4133338	R4133338	R4166689	NR	-	-	-	-
N/A	1-5/8 "	R4133338	R4133338	R4166689	NR	-	-	-	-
N/A	1-5/8 "	R4133338	R4133338	R4166689	NR	-	-	-	-
N/A	1-5/8 "	R4133338	R4133338	R4166689	NR	-	-	-	-

MAKE MODEL YEAR AXLE CODE AXLE WEIGHT	AXLE & BRK. TYPE	BRK. MFG.	BRAKE SIZE	FMSI	MERITOR DISC PAD OR BRAKE SHOE	MERITOR GUIDE PIN OR RETURN SPRING KIT	MERITOR CALIPER HWD. KIT OR RETURN SPRING KIT	MERITOR ADJUSTER KIT (LEFT WHEEL)	MERITOR ADJUSTER KIT (RIGHT WHEEL)
ITE(Cont.)									
170, 1700, 1710, 1723, 1724, 1750, 1753, 1754 SERIES CONVENTIONAL CAB, SCHOOL BUS, TILT CAB(Cont.)									
1979 C1710, C1750 Cargostar Tilt Cab RA39, 199	Rm	WG	15 " x 7 "	4597 - 383	R700383	R40H597	R40H9200	R40H3518	R404148
C1710, C1750 Cargostar Tilt Cab RA44, 186	Ra	WG	15 " x 7 "	4597 - 383	R700383	R40H597	R40H9200	N/A	N/A
	Rm	WG	15 " x 7 "	4597 - 383	R700383	R40H597	R40H9200	R40H3518	R404148
C1710, C1750 Cargostar Tilt Cab RA47, 57	Ra	WG	16 " x 6 "	1255 - 386	N/A	R40H597	R40H9200	N/A	N/A
	Rm	WG	16 " x 6 "	1255 - 386	N/A	R40H597	R40H9200	R404149	R404150
S1723, S1753 School Bus FA109, 208	Fa	WG	15 " x 3 "	1245C - 321	R700321	R40H521	R40H9237	R40H3502	R40H3503
	Fm	WG	15 " x 3 "	1245A - 235	R700235	R40H521	R40H9201	R40H3524	R40H3524
S1723, S1753 School Bus FA118, 127, 139	Fa	WG	15 " x 5 "	1345A - 491	N/A	R40H521	R40H9237	R40H3502	R40H3503
	Fm	WG	15 " x 5 "	1345 - 490	N/A	R40H521	R40H9201	R40H3524	R40H3524
S1723, S1753 School Bus FA208	Fa	WG	15 " x 3-1/2 "	1280B - 322	R464004	R40H521	R40H9237	R40H3502	R40H3503
	Fm	WG	15 " x 3-1/2 "	1280 - 463	R700463	R40H521	R40H9201	R40H3524	R40H3524
S1723, S1753 School Bus FA48, 68, 70, 72	Fa	WG	14 " x 2-1/2 "	1294A - 325	N/A	R40H521	R40H9237	R40H3502	R40H3503
	Fm	WG	14 " x 2-1/2 "	1294 - 296	N/A	R40H521	R40H9201	R40H3524	R40H3524
S1723, S1753 School Bus FA71, 73, 101	Fa	WG	15 " x 3 "	1245C - 321	R700321	R40H521	R40H9237	R40H3502	R40H3503
	Fa	WG	15 " x 3-1/2 "	1280B - 322	R464004	R40H521	R40H9237	R40H3502	R40H3503
	Fm	WG	15 " x 3 "	1245A - 235	R700235	R40H521	R40H9201	R40H3524	R40H3524
	Fm	WG	15 " x 3-1/2 "	1280 - 463	R700463	R40H521	R40H9201	R40H3524	R40H3524
S1723, S1753 School Bus FA74	Fa	WG	15 " x 3 "	1245C - 321	R700321	R40H521	R40H9237	R40H3502	R40H3503
	Fm	WG	15 " x 3 "	1245A - 235	R700235	R40H521	R40H9201	R40H3524	R40H3524
S1723, S1753 School Bus FA78, 81	Fa	WG	15 " x 3 "	1245C - 321	R700321	R40H521	R40H9237	R40H3502	R40H3503
S1723, S1753 School Bus FA89, 91, 98	Fa	WG	15 " x 3 "	1245C - 321	R700321	R40H521	R40H9237	R40H3502	R40H3503
	Fm	WG	15 " x 3 "	1245A - 235	R700235	R40H521	R40H9201	R40H3524	R40H3524
S1723, S1753 School Bus RA184	Ra	WG	15 " x 4 "	4645A - 376	Discontinued	R40H597	R40H9200	R40H3540	R40H3541
	Rm	WG	15 " x 4 "	4645A - 376	Discontinued	R40H597	R40H9200	R40H3518	R404148
S1723, S1753 School Bus RA25, 184	Ra	WG	15 " x 5 "	1252 - 346	R700346	R40H597	R40H9200	R40H3540	R40H3541
	Rm	WG	15 " x 5 "	1252 - 346	R700346	R40H597	R40H9200	R40H3518	R404148
S1723, S1753 School Bus RA29, 30, 187	Ra	WG	15 " x 5 "	1252 - 346	R700346	R40H597	R40H9200	R40H3540	R40H3541
	Rm	WG	15 " x 5 "	1252 - 346	R700346	R40H597	R40H9200	R40H3518	R404148
S1723, S1753 School Bus RA30, 187	Ra	WG	16 " x 5 "	1254 - 385	N/A	R40H597	R40H9200	N/A	N/A
	Rm	WG	16 " x 5 "	1254 - 385	N/A	R40H597	R40H9200	R404149	R404150
S1723, S1753 School Bus RA30, 39, 44, 186, 189	Ra	WG	15 " x 6 "	4596 - 381	R700381	R40H597	R40H9200	R40H3540	R40H3541
	Rm	WG	15 " x 6 "	4596 - 381	R700381	R40H597	R40H9200	R40H3518	R404148
S1723, S1753 School Bus RA39, 199	Ra	WG	15 " x 7 "	4597 - 383	R700383	R40H597	R40H9200	R40H3540	R40H3541
	Rm	WG	15 " x 7 "	4597 - 383	R700383	R40H597	R40H9200	R40H3518	R404148
S1723, S1753 School Bus RA44, 186	Ra	WG	15 " x 7 "	4597 - 383	R700383	R40H597	R40H9200	N/A	N/A
	Rm	WG	15 " x 7 "	4597 - 383	R700383	R40H597	R40H9200	R40H3518	R404148
S1723, S1753 School Bus RA47, 57	Ra	WG	16 " x 6 "	1255 - 386	N/A	R40H597	R40H9200	N/A	N/A
	Rm	WG	16 " x 6 "	1255 - 386	N/A	R40H597	R40H9200	R404149	R404150
S1724, S1754 Conventional FA109, 208	Fa	WG	15 " x 3 "	1245C - 321	R700321	R40H521	R40H9237	R40H3502	R40H3503

MERITOR DRUM OR ROTOR NO.	CALIPER OR CYLINDER BORE SIZE	MERITOR CALIPER OR WHEEL CYLINDER (LEFT)	MERITOR CALIPER OR WHEEL CYLINDER (RIGHT)	MERITOR CALIPER OR WHEEL CYLINDER REPAIR KIT	MERITOR CALIPER PISTON	MERITOR MASTER CYLINDER	MERITOR MASTER CYLINDER KIT	MERITOR BRAKE HOSE (LEFT)	MERITOR BRAKE HOSE (RIGHT)
									ITE(Cont.)
170, 1700, 1710, 1723, 1724, 1750, 1753, 1754 SERIES CONVENTIONAL CAB, SCHOOL BUS, TILT CAB(Cont.)									
N/A	1-5/8 "	R4133338	R4133338	R4166689	NR	-	-	-	-
N/A	1-5/8 "	R4133338	R4133338	R4166689	NR	-	-	-	-
N/A	1-5/8 "	R4133338	R4133338	R4166689	NR	-	-	-	-
N/A	1-3/4 "	R4133400	R4133400	R4166917	NR	-	-	-	-
N/A	1-3/4 "	R4133400	R4133400	R4166917	NR	-	-	-	-
N/A	1-1/4 "	R4133581	R4133582	R4166923	NR	-	-	-	-
N/A	1-1/4 "	R4133581	R4133582	R4166923	NR	-	-	-	-
N/A		-	-	N/A	N/A	-	-	-	-
N/A		-	-	N/A	N/A	-	-	-	-
N/A	1-1/4 "	R4133581	R4133582	R4166923	NR	-	-	-	-
N/A	1-1/4 "	R4133581	R4133582	R4166923	NR	-	-	-	-
N/A	1-1/8 "	R4133714	R4133715	R4166926	NR	-	-	-	-
N/A	1-1/8 "	R4133714	R4133715	R4166926	NR	-	-	-	-
N/A	1-1/4 "	R4133581	R4133582	R4166923	NR	-	-	-	-
N/A	1-1/4 "	R4133581	R4133582	R4166923	NR	-	-	-	-
N/A	1-1/4 "	R4133581	R4133582	R4166923	NR	-	-	-	-
N/A	1-1/4 "	R4133581	R4133582	R4166923	NR	-	-	-	-
N/A	1-1/4 "	R4133581	R4133582	R4166923	NR	-	-	-	-
N/A	1-1/4 "	R4133581	R4133582	R4166923	NR	-	-	-	-
N/A	1-1/4 "	R4133581	R4133582	R4166923	NR	-	-	-	-
N/A	1-1/4 "	R4133581	R4133582	R4166923	NR	-	-	-	-
N/A	1-1/4 "	R4133581	R4133582	R4166923	NR	-	-	-	-
N/A	1-1/2 "	R4133580	R4133580	Discontinued	NR	-	-	-	-
N/A	1-1/2 "	R4133580	R4133580	Discontinued	NR	-	-	-	-
N/A	1-1/2 "	R4133580	R4133580	Discontinued	NR	-	-	-	-
N/A	1-1/2 "	R4133580	R4133580	Discontinued	NR	-	-	-	-
N/A	1-1/2 "	R4133580	R4133580	Discontinued	NR	-	-	-	-
N/A	1-1/2 "	R4133580	R4133580	Discontinued	NR	-	-	-	-
N/A	1-5/8 "	R4133338	R4133338	R4166689	NR	-	-	-	-
N/A	1-5/8 "	R4133338	R4133338	R4166689	NR	-	-	-	-
N/A	1-5/8 "	R4133338	R4133338	R4166689	NR	-	-	-	-
N/A	1-5/8 "	R4133338	R4133338	R4166689	NR	-	-	-	-
N/A	1-5/8 "	R4133338	R4133338	R4166689	NR	-	-	-	-
N/A	1-5/8 "	R4133338	R4133338	R4166689	NR	-	-	-	-
N/A	1-5/8 "	R4133338	R4133338	R4166689	NR	-	-	-	-
N/A	1-5/8 "	R4133338	R4133338	R4166689	NR	-	-	-	-
N/A	1-3/4 "	R4133400	R4133400	R4166917	NR	-	-	-	-
N/A	1-3/4 "	R4133400	R4133400	R4166917	NR	-	-	-	-
N/A	1-1/4 "	R4133581	R4133582	R4166923	NR	-	-	-	-

MAKE MODEL YEAR AXLE CODE AXLE WEIGHT	AXLE & BRK. TYPE	BRK. MFG.	BRAKE SIZE	FMSI	MERITOR DISC PAD OR BRAKE SHOE	MERITOR GUIDE PIN OR RETURN SPRING KIT	MERITOR CALIPER HWD. KIT OR RETURN SPRING KIT	MERITOR ADJUSTER KIT (LEFT WHEEL)	MERITOR ADJUSTER KIT (RIGHT WHEEL)
ITE(Cont.)									
170, 1700, 1710, 1723, 1724, 1750, 1753, 1754 SERIES CONVENTIONAL CAB, SCHOOL BUS, TILT CAB(Cont.)									
1979									
	Fm	WG	15 " x 3 "	1245A - 235	R700235	R40H521	R40H9201	R40H3524	R40H3524
S1724, S1754 Conventional FA118, 127, 139	Fa	WG	15 " x 5 "	1345A - 491	N/A	R40H521	R40H9237	R40H3502	R40H3503
	Fm	WG	15 " x 5 "	1345 - 490	N/A	R40H521	R40H9201	R40H3524	R40H3524
S1724, S1754 Conventional FA208	Fa	WG	15 " x 3-1/2 "	1280B - 322	R464004	R40H521	R40H9237	R40H3502	R40H3503
	Fm	WG	15 " x 3-1/2 "	1280 - 463	R700463	R40H521	R40H9201	R40H3524	R40H3524
S1724, S1754 Conventional FA48, 68, 70, 72	Fa	WG	14 " x 2-1/2 "	1294A - 325	N/A	R40H521	R40H9237	R40H3502	R40H3503
	Fm	WG	14 " x 2-1/2 "	1294 - 296	N/A	R40H521	R40H9201	R40H3524	R40H3524
S1724, S1754 Conventional FA71, 73, 101	Fa	WG	15 " x 3 "	1245C - 321	R700321	R40H521	R40H9237	R40H3502	R40H3503
	Fa	WG	15 " x 3-1/2 "	1280B - 322	R464004	R40H521	R40H9237	R40H3502	R40H3503
	Fm	WG	15 " x 3 "	1245A - 235	R700235	R40H521	R40H9201	R40H3524	R40H3524
	Fm	WG	15 " x 3-1/2 "	1280 - 463	R700463	R40H521	R40H9201	R40H3524	R40H3524
S1724, S1754 Conventional FA74	Fa	WG	15 " x 3 "	1245C - 321	R700321	R40H521	R40H9237	R40H3502	R40H3503
	Fm	WG	15 " x 3 "	1245A - 235	R700235	R40H521	R40H9201	R40H3524	R40H3524
S1724, S1754 Conventional FA78, 81	Fa	WG	15 " x 3 "	1245C - 321	R700321	R40H521	R40H9237	R40H3502	R40H3503
S1724, S1754 Conventional FA89, 91, 98	Fa	WG	15 " x 3 "	1245C - 321	R700321	R40H521	R40H9237	R40H3502	R40H3503
	Fm	WG	15 " x 3 "	1245A - 235	R700235	R40H521	R40H9201	R40H3524	R40H3524
S1724, S1754 Conventional RA184	Ra	WG	15 " x 4 "	4645A - 376	Discontinued	R40H597	R40H9200	R40H3540	R40H3541
	Rm	WG	15 " x 4 "	4645A - 376	Discontinued	R40H597	R40H9200	R40H3518	R404148
S1724, S1754 Conventional RA25, 184	Ra	WG	15 " x 5 "	1252 - 346	R700346	R40H597	R40H9200	R40H3540	R40H3541
	Rm	WG	15 " x 5 "	1252 - 346	R700346	R40H597	R40H9200	R40H3518	R404148
S1724, S1754 Conventional RA29, 30, 187	Ra	WG	15 " x 5 "	1252 - 346	R700346	R40H597	R40H9200	R40H3540	R40H3541
	Rm	WG	15 " x 5 "	1252 - 346	R700346	R40H597	R40H9200	R40H3518	R404148
S1724, S1754 Conventional RA30, 187	Ra	WG	16 " x 5 "	1254 - 385	N/A	R40H597	R40H9200	N/A	N/A
	Rm	WG	16 " x 5 "	1254 - 385	N/A	R40H597	R40H9200	R404149	R404150
S1724, S1754 Conventional RA30, 39, 44, 186, 189	Ra	WG	15 " x 6 "	4596 - 381	R700381	R40H597	R40H9200	R40H3540	R40H3541
	Rm	WG	15 " x 6 "	4596 - 381	R700381	R40H597	R40H9200	R40H3518	R404148
S1724, S1754 Conventional RA39, 199	Ra	WG	15 " x 7 "	4597 - 383	R700383	R40H597	R40H9200	R40H3540	R40H3541
	Rm	WG	15 " x 7 "	4597 - 383	R700383	R40H597	R40H9200	R40H3518	R404148
S1724, S1754 Conventional RA44, 186	Ra	WG	15 " x 7 "	4597 - 383	R700383	R40H597	R40H9200	N/A	N/A
	Rm	WG	15 " x 7 "	4597 - 383	R700383	R40H597	R40H9200	R40H3518	R404148
S1724, S1754 Conventional RA47, 57	Ra	WG	16 " x 6 "	1255 - 386	N/A	R40H597	R40H9200	N/A	N/A
	Rm	WG	16 " x 6 "	1255 - 386	N/A	R40H597	R40H9200	R404149	R404150
1978									
C1710, C1750 Cargostar Tilt Cab FA109, 208	Fa	WG	15 " x 3 "	1245C - 321	R700321	R40H521	R40H9237	R40H3502	R40H3503
	Fm	WG	15 " x 3 "	1245A - 235	R700235	R40H521	R40H9201	R40H3524	R40H3524
C1710, C1750 Cargostar Tilt Cab FA118, 127, 139	Fa	WG	15 " x 5 "	1345A - 491	N/A	R40H521	R40H9237	R40H3502	R40H3503
	Fm	WG	15 " x 5 "	1345 - 490	N/A	R40H521	R40H9201	R40H3524	R40H3524
C1710, C1750 Cargostar Tilt Cab FA208	Fa	WG	15 " x 3-1/2 "	1280B - 322	R464004	R40H521	R40H9237	R40H3502	R40H3503
	Fm	WG	15 " x 3-1/2 "	1280 - 463	R700463	R40H521	R40H9201	R40H3524	R40H3524
C1710, C1750 Cargostar Tilt Cab FA48, 68, 70, 72	Fa	WG	14 " x 2-1/2 "	1294A - 325	N/A	R40H521	R40H9237	R40H3502	R40H3503

MERITOR DRUM OR ROTOR NO.	CALIPER OR CYLINDER BORE SIZE	MERITOR CALIPER OR WHEEL CYLINDER (LEFT)	MERITOR CALIPER OR WHEEL CYLINDER (RIGHT)	MERITOR CALIPER OR WHEEL CYLINDER REPAIR KIT	MERITOR CALIPER PISTON	MERITOR MASTER CYLINDER	MERITOR MASTER CYLINDER KIT	MERITOR BRAKE HOSE (LEFT)	MERITOR BRAKE HOSE (RIGHT)
									ITE(Cont.)
170, 1700, 1710, 1723, 1724, 1750, 1753, 1754 SERIES CONVENTIONAL CAB, SCHOOL BUS, TILT CAB(Cont.)									
N/A	1-1/4 "	R4133581	R4133582	R4166923	NR	-	-	-	-
N/A		-	-	N/A	N/A	-	-	-	-
N/A		-	-	N/A	N/A	-	-	-	-
N/A	1-1/4 "	R4133581	R4133582	R4166923	NR	-	-	-	-
N/A	1-1/4 "	R4133581	R4133582	R4166923	NR	-	-	-	-
N/A	1-1/8 "	R4133714	R4133715	R4166926	NR	-	-	-	-
N/A	1-1/8 "	R4133714	R4133715	R4166926	NR	-	-	-	-
N/A	1-1/4 "	R4133581	R4133582	R4166923	NR	-	-	-	-
N/A	1-1/4 "	R4133581	R4133582	R4166923	NR	-	-	-	-
N/A	1-1/4 "	R4133581	R4133582	R4166923	NR	-	-	-	-
N/A	1-1/4 "	R4133581	R4133582	R4166923	NR	-	-	-	-
N/A	1-1/4 "	R4133581	R4133582	R4166923	NR	-	-	-	-
N/A	1-1/4 "	R4133581	R4133582	R4166923	NR	-	-	-	-
N/A	1-1/4 "	R4133581	R4133582	R4166923	NR	-	-	-	-
N/A	1-1/4 "	R4133581	R4133582	R4166923	NR	-	-	-	-
N/A	1-1/4 "	R4133581	R4133582	R4166923	NR	-	-	-	-
N/A	1-1/4 "	R4133581	R4133582	R4166923	NR	-	-	-	-
N/A	1-1/2 "	R4133580	R4133580	Discontinued	NR	-	-	-	-
N/A	1-1/2 "	R4133580	R4133580	Discontinued	NR	-	-	-	-
N/A	1-1/2 "	R4133580	R4133580	Discontinued	NR	-	-	-	-
N/A	1-1/2 "	R4133580	R4133580	Discontinued	NR	-	-	-	-
N/A	1-1/2 "	R4133580	R4133580	Discontinued	NR	-	-	-	-
N/A	1-1/2 "	R4133580	R4133580	Discontinued	NR	-	-	-	-
N/A	1-5/8 "	R4133338	R4133338	R4166689	NR	-	-	-	-
N/A	1-5/8 "	R4133338	R4133338	R4166689	NR	-	-	-	-
N/A	1-5/8 "	R4133338	R4133338	R4166689	NR	-	-	-	-
N/A	1-5/8 "	R4133338	R4133338	R4166689	NR	-	-	-	-
N/A	1-5/8 "	R4133338	R4133338	R4166689	NR	-	-	-	-
N/A	1-5/8 "	R4133338	R4133338	R4166689	NR	-	-	-	-
N/A	1-5/8 "	R4133338	R4133338	R4166689	NR	-	-	-	-
N/A	1-5/8 "	R4133338	R4133338	R4166689	NR	-	-	-	-
N/A	1-3/4 "	R4133400	R4133400	R4166917	NR	-	-	-	-
N/A	1-3/4 "	R4133400	R4133400	R4166917	NR	-	-	-	-
N/A	1-1/4 "	R4133581	R4133582	R4166923	NR	-	-	-	-
N/A	1-1/4 "	R4133581	R4133582	R4166923	NR	-	-	-	-
N/A		-	-	N/A	N/A	-	-	-	-
N/A		-	-	N/A	N/A	-	-	-	-
N/A	1-1/4 "	R4133581	R4133582	R4166923	NR	-	-	-	-
N/A	1-1/4 "	R4133581	R4133582	R4166923	NR	-	-	-	-
N/A	1-1/8 "	R4133714	R4133715	R4166926	NR	-	-	-	-

MAKE MODEL YEAR AXLE CODE AXLE WEIGHT	AXLE & BRK. TYPE	BRK. MFG.	BRAKE SIZE	FMSI	MERITOR DISC PAD OR BRAKE SHOE	MERITOR GUIDE PIN OR RETURN SPRING KIT	MERITOR CALIPER HWD. KIT OR RETURN SPRING KIT	MERITOR ADJUSTER KIT (LEFT WHEEL)	MERITOR ADJUSTER KIT (RIGHT WHEEL)
ITE(Cont.)									
170, 1700, 1710, 1723, 1724, 1750, 1753, 1754 SERIES CONVENTIONAL CAB, SCHOOL BUS, TILT CAB(Cont.)									
1978	Fm	WG	14 " x 2-1/2 "	1294 - 296	N/A	R40H521	R40H9201	R40H3524	R40H3524
C1710, C1750 Cargostar Tilt Cab									
FA71, 73, 101	Fa	WG	15 " x 3 "	1245C - 321	R700321	R40H521	R40H9237	R40H3502	R40H3503
	Fa	WG	15 " x 3-1/2 "	1280B - 322	R464004	R40H521	R40H9237	R40H3502	R40H3503
	Fm	WG	15 " x 3 "	1245A - 235	R700235	R40H521	R40H9201	R40H3524	R40H3524
	Fm	WG	15 " x 3-1/2 "	1280 - 463	R700463	R40H521	R40H9201	R40H3524	R40H3524
C1710, C1750 Cargostar Tilt Cab									
FA74	Fa	WG	15 " x 3 "	1245C - 321	R700321	R40H521	R40H9237	R40H3502	R40H3503
	Fm	WG	15 " x 3 "	1245A - 235	R700235	R40H521	R40H9201	R40H3524	R40H3524
C1710, C1750 Cargostar Tilt Cab									
FA78, 81	Fa	WG	15 " x 3 "	1245C - 321	R700321	R40H521	R40H9237	R40H3502	R40H3503
C1710, C1750 Cargostar Tilt Cab									
FA89, 91, 98	Fa	WG	15 " x 3 "	1245C - 321	R700321	R40H521	R40H9237	R40H3502	R40H3503
	Fm	WG	15 " x 3 "	1245A - 235	R700235	R40H521	R40H9201	R40H3524	R40H3524
C1710, C1750 Cargostar Tilt Cab									
RA184	Ra	WG	15 " x 4 "	4645A - 376	Discontinued	R40H597	R40H9200	R40H3540	R40H3541
	Rm	WG	15 " x 4 "	4645A - 376	Discontinued	R40H597	R40H9200	R40H3518	R404148
C1710, C1750 Cargostar Tilt Cab									
RA25, 184	Ra	WG	15 " x 5 "	1252 - 346	R700346	R40H597	R40H9200	R40H3540	R40H3541
	Rm	WG	15 " x 5 "	1252 - 346	R700346	R40H597	R40H9200	R40H3518	R404148
C1710, C1750 Cargostar Tilt Cab									
RA29, 30, 187	Ra	WG	15 " x 5 "	1252 - 346	R700346	R40H597	R40H9200	R40H3540	R40H3541
	Rm	WG	15 " x 5 "	1252 - 346	R700346	R40H597	R40H9200	R40H3518	R404148
C1710, C1750 Cargostar Tilt Cab									
RA30, 187	Ra	WG	16 " x 5 "	1254 - 385	N/A	R40H597	R40H9200	N/A	N/A
	Rm	WG	16 " x 5 "	1254 - 385	N/A	R40H597	R40H9200	R404149	R404150
C1710, C1750 Cargostar Tilt Cab									
RA30, 39, 44, 186, 189	Ra	WG	15 " x 6 "	4596 - 381	R700381	R40H597	R40H9200	R40H3540	R40H3541
	Rm	WG	15 " x 6 "	4596 - 381	R700381	R40H597	R40H9200	R40H3518	R404148
C1710, C1750 Cargostar Tilt Cab									
RA39, 199	Ra	WG	15 " x 7 "	4597 - 383	R700383	R40H597	R40H9200	R40H3540	R40H3541
	Rm	WG	15 " x 7 "	4597 - 383	R700383	R40H597	R40H9200	R40H3518	R404148
C1710, C1750 Cargostar Tilt Cab									
RA44, 186	Ra	WG	15 " x 7 "	4597 - 383	R700383	R40H597	R40H9200	N/A	N/A
	Rm	WG	15 " x 7 "	4597 - 383	R700383	R40H597	R40H9200	R40H3518	R404148
C1710, C1750 Cargostar Tilt Cab									
RA47, 57	Ra	WG	16 " x 6 "	1255 - 386	N/A	R40H597	R40H9200	N/A	N/A
	Rm	WG	16 " x 6 "	1255 - 386	N/A	R40H597	R40H9200	R404149	R404150
S1723, S1753 School Bus									
FA109, 208	Fa	WG	15 " x 3 "	1245C - 321	R700321	R40H521	R40H9237	R40H3502	R40H3503
	Fm	WG	15 " x 3 "	1245A - 235	R700235	R40H521	R40H9201	R40H3524	R40H3524
S1723, S1753 School Bus									
FA118, 127, 139	Fa	WG	15 " x 5 "	1345A - 491	N/A	R40H521	R40H9237	R40H3502	R40H3503
	Fm	WG	15 " x 5 "	1345 - 490	N/A	R40H521	R40H9201	R40H3524	R40H3524
S1723, S1753 School Bus									
FA208	Fa	WG	15 " x 3-1/2 "	1280B - 322	R464004	R40H521	R40H9237	R40H3502	R40H3503
	Fm	WG	15 " x 3-1/2 "	1280 - 463	R700463	R40H521	R40H9201	R40H3524	R40H3524
S1723, S1753 School Bus									
FA48, 68, 70, 72	Fa	WG	14 " x 2-1/2 "	1294A - 325	N/A	R40H521	R40H9237	R40H3502	R40H3503

MERITOR DRUM OR ROTOR NO.	CALIPER OR CYLINDER BORE SIZE	MERITOR CALIPER OR WHEEL CYLINDER (LEFT)	MERITOR CALIPER OR WHEEL CYLINDER (RIGHT)	MERITOR CALIPER OR WHEEL CYLINDER REPAIR KIT	MERITOR CALIPER PISTON	MERITOR MASTER CYLINDER	MERITOR MASTER CYLINDER KIT	MERITOR BRAKE HOSE (LEFT)	MERITOR BRAKE HOSE (RIGHT)
									ITE(Cont.)
170, 1700, 1710, 1723, 1724, 1750, 1753, 1754 SERIES CONVENTIONAL CAB, SCHOOL BUS, TILT CAB(Cont.)									
N/A	1-1/8 "	R4133714	R4133715	R4166926	NR	-	-	-	-
N/A	1-1/4 "	R4133581	R4133582	R4166923	NR	-	-	-	-
N/A	1-1/4 "	R4133581	R4133582	R4166923	NR	-	-	-	-
N/A	1-1/4 "	R4133581	R4133582	R4166923	NR	-	-	-	-
N/A	1-1/4 "	R4133581	R4133582	R4166923	NR	-	-	-	-
N/A	1-1/4 "	R4133581	R4133582	R4166923	NR	-	-	-	-
N/A	1-1/4 "	R4133581	R4133582	R4166923	NR	-	-	-	-
N/A	1-1/4 "	R4133581	R4133582	R4166923	NR	-	-	-	-
N/A	1-1/2 "	R4133580	R4133580	Discontinued	NR	-	-	-	-
N/A	1-1/2 "	R4133580	R4133580	Discontinued	NR	-	-	-	-
N/A	1-1/2 "	R4133580	R4133580	Discontinued	NR	-	-	-	-
N/A	1-1/2 "	R4133580	R4133580	Discontinued	NR	-	-	-	-
N/A	1-1/2 "	R4133580	R4133580	Discontinued	NR	-	-	-	-
N/A	1-1/2 "	R4133580	R4133580	Discontinued	NR	-	-	-	-
N/A	1-5/8 "	R4133338	R4133338	R4166689	NR	-	-	-	-
N/A	1-5/8 "	R4133338	R4133338	R4166689	NR	-	-	-	-
N/A	1-5/8 "	R4133338	R4133338	R4166689	NR	-	-	-	-
N/A	1-5/8 "	R4133338	R4133338	R4166689	NR	-	-	-	-
N/A	1-5/8 "	R4133338	R4133338	R4166689	NR	-	-	-	-
N/A	1-5/8 "	R4133338	R4133338	R4166689	NR	-	-	-	-
N/A	1-5/8 "	R4133338	R4133338	R4166689	NR	-	-	-	-
N/A	1-5/8 "	R4133338	R4133338	R4166689	NR	-	-	-	-
N/A	1-3/4 "	R4133400	R4133400	R4166917	NR	-	-	-	-
N/A	1-3/4 "	R4133400	R4133400	R4166917	NR	-	-	-	-
N/A	1-1/4 "	R4133581	R4133582	R4166923	NR	-	-	-	-
N/A	1-1/4 "	R4133581	R4133582	R4166923	NR	-	-	-	-
N/A		-	-	N/A	N/A	-	-	-	-
N/A		-	-	N/A	N/A	-	-	-	-
N/A	1-1/4 "	R4133581	R4133582	R4166923	NR	-	-	-	-
N/A	1-1/4 "	R4133581	R4133582	R4166923	NR	-	-	-	-
N/A	1-1/8 "	R4133714	R4133715	R4166926	NR	-	-	-	-

MAKE MODEL YEAR AXLE CODE AXLE WEIGHT	AXLE & BRK. TYPE	BRK. MFG.	BRAKE SIZE	FMSI	MERITOR DISC PAD OR BRAKE SHOE	MERITOR GUIDE PIN OR RETURN SPRING KIT	MERITOR CALIPER HWD. KIT OR RETURN SPRING KIT	MERITOR ADJUSTER KIT (LEFT WHEEL)	MERITOR ADJUSTER KIT (RIGHT WHEEL)
ITE(Cont.)									
170, 1700, 1710, 1723, 1724, 1750, 1753, 1754 SERIES CONVENTIONAL CAB, SCHOOL BUS, TILT CAB(Cont.)									
1978	Fm	WG	14 " x 2-1/2 "	1294 - 296	N/A	R40H521	R40H9201	R40H3524	R40H3524
S1723, S1753 School Bus FA71, 73, 101	Fa	WG	15 " x 3 "	1245C - 321	R700321	R40H521	R40H9237	R40H3502	R40H3503
	Fa	WG	15 " x 3-1/2 "	1280B - 322	R464004	R40H521	R40H9237	R40H3502	R40H3503
	Fm	WG	15 " x 3 "	1245A - 235	R700235	R40H521	R40H9201	R40H3524	R40H3524
	Fm	WG	15 " x 3-1/2 "	1280 - 463	R700463	R40H521	R40H9201	R40H3524	R40H3524
S1723, S1753 School Bus FA74	Fa	WG	15 " x 3 "	1245C - 321	R700321	R40H521	R40H9237	R40H3502	R40H3503
	Fm	WG	15 " x 3 "	1245A - 235	R700235	R40H521	R40H9201	R40H3524	R40H3524
S1723, S1753 School Bus FA78, 81	Fa	WG	15 " x 3 "	1245C - 321	R700321	R40H521	R40H9237	R40H3502	R40H3503
S1723, S1753 School Bus FA89, 91, 98	Fa	WG	15 " x 3 "	1245C - 321	R700321	R40H521	R40H9237	R40H3502	R40H3503
	Fm	WG	15 " x 3 "	1245A - 235	R700235	R40H521	R40H9201	R40H3524	R40H3524
S1723, S1753 School Bus RA184	Ra	WG	15 " x 4 "	4645A - 376	Discontinued	R40H597	R40H9200	R40H3540	R40H3541
	Rm	WG	15 " x 4 "	4645A - 376	Discontinued	R40H597	R40H9200	R40H3518	R404148
S1723, S1753 School Bus RA25, 184	Ra	WG	15 " x 5 "	1252 - 346	R700346	R40H597	R40H9200	R40H3540	R40H3541
	Rm	WG	15 " x 5 "	1252 - 346	R700346	R40H597	R40H9200	R40H3518	R404148
S1723, S1753 School Bus RA29, 30, 187	Ra	WG	15 " x 5 "	1252 - 346	R700346	R40H597	R40H9200	R40H3540	R40H3541
	Rm	WG	15 " x 5 "	1252 - 346	R700346	R40H597	R40H9200	R40H3518	R404148
S1723, S1753 School Bus RA30, 187	Ra	WG	16 " x 5 "	1254 - 385	N/A	R40H597	R40H9200	N/A	N/A
	Rm	WG	16 " x 5 "	1254 - 385	N/A	R40H597	R40H9200	R404149	R404150
S1723, S1753 School Bus RA30, 39, 44, 186, 189	Ra	WG	15 " x 6 "	4596 - 381	R700381	R40H597	R40H9200	R40H3540	R40H3541
	Rm	WG	15 " x 6 "	4596 - 381	R700381	R40H597	R40H9200	R40H3518	R404148
S1723, S1753 School Bus RA39, 199	Ra	WG	15 " x 7 "	4597 - 383	R700383	R40H597	R40H9200	R40H3540	R40H3541
	Rm	WG	15 " x 7 "	4597 - 383	R700383	R40H597	R40H9200	R40H3518	R404148
S1723, S1753 School Bus RA44, 186	Ra	WG	15 " x 7 "	4597 - 383	R700383	R40H597	R40H9200	N/A	N/A
	Rm	WG	15 " x 7 "	4597 - 383	R700383	R40H597	R40H9200	R40H3518	R404148
S1723, S1753 School Bus RA47, 57	Ra	WG	16 " x 6 "	1255 - 386	N/A	R40H597	R40H9200	N/A	N/A
	Rm	WG	16 " x 6 "	1255 - 386	N/A	R40H597	R40H9200	R404149	R404150
S1724, S1754 Conventional FA109, 208	Fa	WG	15 " x 3 "	1245C - 321	R700321	R40H521	R40H9237	R40H3502	R40H3503
	Fm	WG	15 " x 3 "	1245A - 235	R700235	R40H521	R40H9201	R40H3524	R40H3524
S1724, S1754 Conventional FA118, 127, 139	Fa	WG	15 " x 5 "	1345A - 491	N/A	R40H521	R40H9237	R40H3502	R40H3503
	Fm	WG	15 " x 5 "	1345 - 490	N/A	R40H521	R40H9201	R40H3524	R40H3524
S1724, S1754 Conventional FA208	Fa	WG	15 " x 3-1/2 "	1280B - 322	R464004	R40H521	R40H9237	R40H3502	R40H3503
	Fm	WG	15 " x 3-1/2 "	1280 - 463	R700463	R40H521	R40H9201	R40H3524	R40H3524
S1724, S1754 Conventional FA48, 68, 70, 72	Fa	WG	14 " x 2-1/2 "	1294A - 325	N/A	R40H521	R40H9237	R40H3502	R40H3503
	Fm	WG	14 " x 2-1/2 "	1294 - 296	N/A	R40H521	R40H9201	R40H3524	R40H3524
S1724, S1754 Conventional FA71, 73, 101	Fa	WG	15 " x 3 "	1245C - 321	R700321	R40H521	R40H9237	R40H3502	R40H3503
	Fa	WG	15 " x 3-1/2 "	1280B - 322	R464004	R40H521	R40H9237	R40H3502	R40H3503
	Fm	WG	15 " x 3 "	1245A - 235	R700235	R40H521	R40H9201	R40H3524	R40H3524
	Fm	WG	15 " x 3-1/2 "	1280 - 463	R700463	R40H521	R40H9201	R40H3524	R40H3524
S1724, S1754 Conventional FA74	Fa	WG	15 " x 3 "	1245C - 321	R700321	R40H521	R40H9237	R40H3502	R40H3503
	Fm	WG	15 " x 3 "	1245A - 235	R700235	R40H521	R40H9201	R40H3524	R40H3524
S1724, S1754 Conventional FA78, 81	Fa	WG	15 " x 3 "	1245C - 321	R700321	R40H521	R40H9237	R40H3502	R40H3503
S1724, S1754 Conventional FA89, 91, 98	Fa	WG	15 " x 3 "	1245C - 321	R700321	R40H521	R40H9237	R40H3502	R40H3503

MERITOR DRUM OR ROTOR NO.	CALIPER OR CYLINDER BORE SIZE	MERITOR CALIPER OR WHEEL CYLINDER (LEFT)	MERITOR CALIPER OR WHEEL CYLINDER (RIGHT)	MERITOR CALIPER OR WHEEL CYLINDER REPAIR KIT	MERITOR CALIPER PISTON	MERITOR MASTER CYLINDER	MERITOR MASTER CYLINDER KIT	MERITOR BRAKE HOSE (LEFT)	MERITOR BRAKE HOSE (RIGHT)
									ITE(Cont.)
170, 1700, 1710, 1723, 1724, 1750, 1753, 1754 SERIES CONVENTIONAL CAB, SCHOOL BUS, TILT CAB(Cont.)									
N/A	1-1/8 "	R4133714	R4133715	R4166926	NR	-	-	-	-
N/A	1-1/4 "	R4133581	R4133582	R4166923	NR	-	-	-	-
N/A	1-1/4 "	R4133581	R4133582	R4166923	NR	-	-	-	-
N/A	1-1/4 "	R4133581	R4133582	R4166923	NR	-	-	-	-
N/A	1-1/4 "	R4133581	R4133582	R4166923	NR	-	-	-	-
N/A	1-1/4 "	R4133581	R4133582	R4166923	NR	-	-	-	-
N/A	1-1/4 "	R4133581	R4133582	R4166923	NR	-	-	-	-
N/A	1-1/4 "	R4133581	R4133582	R4166923	NR	-	-	-	-
N/A	1-1/2 "	R4133580	R4133580	Discontinued	NR	-	-	-	-
N/A	1-1/2 "	R4133580	R4133580	Discontinued	NR	-	-	-	-
N/A	1-1/2 "	R4133580	R4133580	Discontinued	NR	-	-	-	-
N/A	1-1/2 "	R4133580	R4133580	Discontinued	NR	-	-	-	-
N/A	1-1/2 "	R4133580	R4133580	Discontinued	NR	-	-	-	-
N/A	1-1/2 "	R4133580	R4133580	Discontinued	NR	-	-	-	-
N/A	1-5/8 "	R4133338	R4133338	R4166689	NR	-	-	-	-
N/A	1-5/8 "	R4133338	R4133338	R4166689	NR	-	-	-	-
N/A	1-5/8 "	R4133338	R4133338	R4166689	NR	-	-	-	-
N/A	1-5/8 "	R4133338	R4133338	R4166689	NR	-	-	-	-
N/A	1-5/8 "	R4133338	R4133338	R4166689	NR	-	-	-	-
N/A	1-5/8 "	R4133338	R4133338	R4166689	NR	-	-	-	-
N/A	1-5/8 "	R4133338	R4133338	R4166689	NR	-	-	-	-
N/A	1-5/8 "	R4133338	R4133338	R4166689	NR	-	-	-	-
N/A	1-3/4 "	R4133400	R4133400	R4166917	NR	-	-	-	-
N/A	1-3/4 "	R4133400	R4133400	R4166917	NR	-	-	-	-
N/A	1-1/4 "	R4133581	R4133582	R4166923	NR	-	-	-	-
N/A	1-1/4 "	R4133581	R4133582	R4166923	NR	-	-	-	-
N/A		-	-	N/A	N/A	-	-	-	-
N/A		-	-	N/A	N/A	-	-	-	-
N/A	1-1/4 "	R4133581	R4133582	R4166923	NR	-	-	-	-
N/A	1-1/4 "	R4133581	R4133582	R4166923	NR	-	-	-	-
N/A	1-1/8 "	R4133714	R4133715	R4166926	NR	-	-	-	-
N/A	1-1/8 "	R4133714	R4133715	R4166926	NR	-	-	-	-
N/A	1-1/4 "	R4133581	R4133582	R4166923	NR	-	-	-	-
N/A	1-1/4 "	R4133581	R4133582	R4166923	NR	-	-	-	-
N/A	1-1/4 "	R4133581	R4133582	R4166923	NR	-	-	-	-
N/A	1-1/4 "	R4133581	R4133582	R4166923	NR	-	-	-	-
N/A	1-1/4 "	R4133581	R4133582	R4166923	NR	-	-	-	-
N/A	1-1/4 "	R4133581	R4133582	R4166923	NR	-	-	-	-
N/A	1-1/4 "	R4133581	R4133582	R4166923	NR	-	-	-	-
N/A	1-1/4 "	R4133581	R4133582	R4166923	NR	-	-	-	-

MAKE MODEL YEAR AXLE CODE AXLE WEIGHT	AXLE & BRK. TYPE	BRK. MFG.	BRAKE SIZE	FMSI	MERITOR DISC PAD OR BRAKE SHOE	MERITOR GUIDE PIN OR RETURN SPRING KIT	MERITOR CALIPER HWD. KIT OR RETURN SPRING KIT	MERITOR ADJUSTER KIT (LEFT WHEEL)	MERITOR ADJUSTER KIT (RIGHT WHEEL)
ITE(Cont.)									
170, 1700, 1710, 1723, 1724, 1750, 1753, 1754 SERIES CONVENTIONAL CAB, SCHOOL BUS, TILT CAB(Cont.)									
1978									
	Fm	WG	15 " x 3 "	1245A - 235	R700235	R40H521	R40H9201	R40H3524	R40H3524
S1724, S1754 Conventional									
RA184	Ra	WG	15 " x 4 "	4645A - 376	Discontinued	R40H597	R40H9200	R40H3540	R40H3541
	Rm	WG	15 " x 4 "	4645A - 376	Discontinued	R40H597	R40H9200	R40H3518	R404148
S1724, S1754 Conventional									
RA25, 184	Ra	WG	15 " x 5 "	1252 - 346	R700346	R40H597	R40H9200	R40H3540	R40H3541
	Rm	WG	15 " x 5 "	1252 - 346	R700346	R40H597	R40H9200	R40H3518	R404148
S1724, S1754 Conventional									
RA29, 30, 187	Ra	WG	15 " x 5 "	1252 - 346	R700346	R40H597	R40H9200	R40H3540	R40H3541
	Rm	WG	15 " x 5 "	1252 - 346	R700346	R40H597	R40H9200	R40H3518	R404148
S1724, S1754 Conventional									
RA30, 187	Ra	WG	16 " x 5 "	1254 - 385	N/A	R40H597	R40H9200	N/A	N/A
	Rm	WG	16 " x 5 "	1254 - 385	N/A	R40H597	R40H9200	R404149	R404150
S1724, S1754 Conventional									
RA30, 39, 44, 186, 189	Ra	WG	15 " x 6 "	4596 - 381	R700381	R40H597	R40H9200	R40H3540	R40H3541
	Rm	WG	15 " x 6 "	4596 - 381	R700381	R40H597	R40H9200	R40H3518	R404148
S1724, S1754 Conventional									
RA39, 199	Ra	WG	15 " x 7 "	4597 - 383	R700383	R40H597	R40H9200	R40H3540	R40H3541
	Rm	WG	15 " x 7 "	4597 - 383	R700383	R40H597	R40H9200	R40H3518	R404148
S1724, S1754 Conventional									
RA44, 186	Ra	WG	15 " x 7 "	4597 - 383	R700383	R40H597	R40H9200	N/A	N/A
	Rm	WG	15 " x 7 "	4597 - 383	R700383	R40H597	R40H9200	R40H3518	R404148
S1724, S1754 Conventional									
RA47, 57	Ra	WG	16 " x 6 "	1255 - 386	N/A	R40H597	R40H9200	N/A	N/A
	Rm	WG	16 " x 6 "	1255 - 386	N/A	R40H597	R40H9200	R404149	R404150
1977									
C1710, C1750 Cargostar Tilt Cab									
FA109, 208	Fa	WG	15 " x 3 "	1245C - 321	R700321	R40H521	R40H9237	R40H3502	R40H3503
	Fm	WG	15 " x 3 "	1245A - 235	R700235	R40H521	R40H9201	R40H3524	R40H3524
C1710, C1750 Cargostar Tilt Cab									
FA118, 127, 139	Fa	WG	15 " x 5 "	1345A - 491	N/A	R40H521	R40H9237	R40H3502	R40H3503
	Fm	WG	15 " x 5 "	1345 - 490	N/A	R40H521	R40H9201	R40H3524	R40H3524
C1710, C1750 Cargostar Tilt Cab									
FA208	Fa	WG	15 " x 3-1/2 "	1280B - 322	R464004	R40H521	R40H9237	R40H3502	R40H3503
	Fm	WG	15 " x 3-1/2 "	1280 - 463	R700463	R40H521	R40H9201	R40H3524	R40H3524
C1710, C1750 Cargostar Tilt Cab									
FA48, 68, 70, 72	Fa	WG	14 " x 2-1/2 "	1294A - 325	N/A	R40H521	R40H9237	R40H3502	R40H3503
	Fm	WG	14 " x 2-1/2 "	1294 - 296	N/A	R40H521	R40H9201	R40H3524	R40H3524
C1710, C1750 Cargostar Tilt Cab									
FA71, 73, 101	Fa	WG	15 " x 3 "	1245C - 321	R700321	R40H521	R40H9237	R40H3502	R40H3503
	Fa	WG	15 " x 3-1/2 "	1280B - 322	R464004	R40H521	R40H9237	R40H3502	R40H3503
	Fm	WG	15 " x 3 "	1245A - 235	R700235	R40H521	R40H9201	R40H3524	R40H3524
	Fm	WG	15 " x 3-1/2 "	1280 - 463	R700463	R40H521	R40H9201	R40H3524	R40H3524
C1710, C1750 Cargostar Tilt Cab									
FA74	Fa	WG	15 " x 3 "	1245C - 321	R700321	R40H521	R40H9237	R40H3502	R40H3503
	Fm	WG	15 " x 3 "	1245A - 235	R700235	R40H521	R40H9201	R40H3524	R40H3524
C1710, C1750 Cargostar Tilt Cab									
FA78, 81	Fa	WG	15 " x 3 "	1245C - 321	R700321	R40H521	R40H9237	R40H3502	R40H3503
C1710, C1750 Cargostar Tilt Cab									
FA89, 91, 98	Fa	WG	15 " x 3 "	1245C - 321	R700321	R40H521	R40H9237	R40H3502	R40H3503
	Fm	WG	15 " x 3 "	1245A - 235	R700235	R40H521	R40H9201	R40H3524	R40H3524
C1710, C1750 Cargostar Tilt Cab									
RA184	Ra	WG	15 " x 4 "	4645A - 376	Discontinued	R40H597	R40H9200	R40H3540	R40H3541

MERITOR DRUM OR ROTOR NO.	CALIPER OR CYLINDER BORE SIZE	MERITOR CALIPER OR WHEEL CYLINDER (LEFT)	MERITOR CALIPER OR WHEEL CYLINDER (RIGHT)	MERITOR CALIPER OR WHEEL CYLINDER REPAIR KIT	MERITOR CALIPER PISTON	MERITOR MASTER CYLINDER	MERITOR MASTER CYLINDER KIT	MERITOR BRAKE HOSE (LEFT)	MERITOR BRAKE HOSE (RIGHT)
									ITE(Cont.)
170, 1700, 1710, 1723, 1724, 1750, 1753, 1754 SERIES CONVENTIONAL CAB, SCHOOL BUS, TILT CAB(Cont.)									
N/A	1-1/4 "	R4133581	R4133582	R4166923	NR	-	-	-	-
N/A	1-1/2 "	R4133580	R4133580	Discontinued	NR	-	-	-	-
N/A	1-1/2 "	R4133580	R4133580	Discontinued	NR	-	-	-	-
N/A	1-1/2 "	R4133580	R4133580	Discontinued	NR	-	-	-	-
N/A	1-1/2 "	R4133580	R4133580	Discontinued	NR	-	-	-	-
N/A	1-1/2 "	R4133580	R4133580	Discontinued	NR	-	-	-	-
N/A	1-1/2 "	R4133580	R4133580	Discontinued	NR	-	-	-	-
N/A	1-5/8 "	R4133338	R4133338	R4166689	NR	-	-	-	-
N/A	1-5/8 "	R4133338	R4133338	R4166689	NR	-	-	-	-
N/A	1-5/8 "	R4133338	R4133338	R4166689	NR	-	-	-	-
N/A	1-5/8 "	R4133338	R4133338	R4166689	NR	-	-	-	-
N/A	1-5/8 "	R4133338	R4133338	R4166689	NR	-	-	-	-
N/A	1-5/8 "	R4133338	R4133338	R4166689	NR	-	-	-	-
N/A	1-5/8 "	R4133338	R4133338	R4166689	NR	-	-	-	-
N/A	1-5/8 "	R4133338	R4133338	R4166689	NR	-	-	-	-
N/A	1-3/4 "	R4133400	R4133400	R4166917	NR	-	-	-	-
N/A	1-3/4 "	R4133400	R4133400	R4166917	NR	-	-	-	-
-	1-1/4 "	R4133581	R4133582	R4166923	NR	-	-	-	-
-	1-1/4 "	R4133581	R4133582	R4166923	NR	-	-	-	-
-		-	-	-	-	-	-	-	-
-		-	-	-	-	-	-	-	-
-	1-1/4 "	R4133581	R4133582	R4166923	NR	-	-	-	-
-	1-1/4 "	R4133581	R4133582	R4166923	NR	-	-	-	-
-	1-1/8 "	R4133714	R4133715	R4166926	NR	-	-	-	-
-	1-1/8 "	R4133714	R4133715	R4166926	NR	-	-	-	-
-	1-1/4 "	R4133581	R4133582	R4166923	NR	-	-	-	-
-	1-1/4 "	R4133581	R4133582	R4166923	NR	-	-	-	-
-	1-1/4 "	R4133581	R4133582	R4166923	NR	-	-	-	-
-	1-1/4 "	R4133581	R4133582	R4166923	NR	-	-	-	-
-	1-1/4 "	R4133581	R4133582	R4166923	NR	-	-	-	-
-	1-1/4 "	R4133581	R4133582	R4166923	NR	-	-	-	-
-	1-1/4 "	R4133581	R4133582	R4166923	NR	-	-	-	-
-	1-1/4 "	R4133581	R4133582	R4166923	NR	-	-	-	-
-	1-1/4 "	R4133581	R4133582	R4166923	NR	-	-	-	-
-	1-1/2 "	R4133580	R4133580	Discontinued	NR	-	-	-	-

MAKE MODEL YEAR AXLE CODE AXLE WEIGHT	AXLE & BRK. TYPE	BRK. MFG.	BRAKE SIZE	FMSI	MERITOR DISC PAD OR BRAKE SHOE	MERITOR GUIDE PIN OR RETURN SPRING KIT	MERITOR CALIPER HWD. KIT OR RETURN SPRING KIT	MERITOR ADJUSTER KIT (LEFT WHEEL)	MERITOR ADJUSTER KIT (RIGHT WHEEL)
ITE(Cont.)									
170, 1700, 1710, 1723, 1724, 1750, 1753, 1754 SERIES CONVENTIONAL CAB, SCHOOL BUS, TILT CAB(Cont.)									
1977 C1710, C1750 Cargostar Tilt Cab RA184	Rm	WG	15 " x 4 "	4645A - 376	Discontinued	R40H597	R40H9200	R40H3518	R404148
C1710, C1750 Cargostar Tilt Cab RA25, 184	Ra	WG	15 " x 5 "	1252 - 346	R700346	R40H597	R40H9200	R40H3540	R40H3541
	Rm	WG	15 " x 5 "	1252 - 346	R700346	R40H597	R40H9200	R40H3518	R404148
C1710, C1750 Cargostar Tilt Cab RA29, 30, 187	Ra	WG	15 " x 5 "	1252 - 346	R700346	R40H597	R40H9200	R40H3540	R40H3541
	Rm	WG	15 " x 5 "	1252 - 346	R700346	R40H597	R40H9200	R40H3518	R404148
C1710, C1750 Cargostar Tilt Cab RA30, 187	Ra	WG	16 " x 5 "	1254 - 385	N/A	R40H597	R40H9200	NLA	NLA
	Rm	WG	16 " x 5 "	1254 - 385	N/A	R40H597	R40H9200	R404149	R404150
C1710, C1750 Cargostar Tilt Cab RA30, 39, 44, 186, 189	Ra	WG	15 " x 6 "	4596 - 381	R700381	R40H597	R40H9200	R40H3540	R40H3541
	Rm	WG	15 " x 6 "	4596 - 381	R700381	R40H597	R40H9200	R40H3518	R404148
C1710, C1750 Cargostar Tilt Cab RA39, 199	Ra	WG	15 " x 7 "	4597 - 383	R700383	R40H597	R40H9200	R40H3540	R40H3541
	Rm	WG	15 " x 7 "	4597 - 383	R700383	R40H597	R40H9200	R40H3518	R404148
C1710, C1750 Cargostar Tilt Cab RA44, 186	Ra	WG	15 " x 7 "	4597 - 383	R700383	R40H597	R40H9200	NLA	NLA
	Rm	WG	15 " x 7 "	4597 - 383	R700383	R40H597	R40H9200	R40H3518	R404148
C1710, C1750 Cargostar Tilt Cab RA47, 57	Ra	WG	16 " x 6 "	1255 - 386	N/A	R40H597	R40H9200	NLA	NLA
	Rm	WG	16 " x 6 "	1255 - 386	N/A	R40H597	R40H9200	R404149	R404150
S1723, S1753 School Bus FA109, 208	Fa	WG	15 " x 3 "	1245C - 321	R700321	R40H521	R40H9237	R40H3502	R40H3503
	Fm	WG	15 " x 3 "	1245A - 235	R700235	R40H521	R40H9201	R40H3524	R40H3524
S1723, S1753 School Bus FA118, 127, 139	Fa	WG	15 " x 5 "	1345A - 491	N/A	R40H521	R40H9237	R40H3502	R40H3503
	Fm	WG	15 " x 5 "	1345 - 490	N/A	R40H521	R40H9201	R40H3524	R40H3524
S1723, S1753 School Bus FA208	Fa	WG	15 " x 3-1/2 "	1280B - 322	R464004	R40H521	R40H9237	R40H3502	R40H3503
	Fm	WG	15 " x 3-1/2 "	1280 - 463	R700463	R40H521	R40H9201	R40H3524	R40H3524
S1723, S1753 School Bus FA48, 68, 70, 72	Fa	WG	14 " x 2-1/2 "	1294A - 325	N/A	R40H521	R40H9237	R40H3502	R40H3503
	Fm	WG	14 " x 2-1/2 "	1294 - 296	N/A	R40H521	R40H9201	R40H3524	R40H3524
S1723, S1753 School Bus FA71, 73, 101	Fa	WG	15 " x 3 "	1245C - 321	R700321	R40H521	R40H9237	R40H3502	R40H3503
	Fa	WG	15 " x 3-1/2 "	1280B - 322	R464004	R40H521	R40H9237	R40H3502	R40H3503
	Fm	WG	15 " x 3 "	1245A - 235	R700235	R40H521	R40H9201	R40H3524	R40H3524
	Fm	WG	15 " x 3-1/2 "	1280 - 463	R700463	R40H521	R40H9201	R40H3524	R40H3524
S1723, S1753 School Bus FA74	Fa	WG	15 " x 3 "	1245C - 321	R700321	R40H521	R40H9237	R40H3502	R40H3503
	Fm	WG	15 " x 3 "	1245A - 235	R700235	R40H521	R40H9201	R40H3524	R40H3524
S1723, S1753 School Bus FA78, 81	Fa	WG	15 " x 3 "	1245C - 321	R700321	R40H521	R40H9237	R40H3502	R40H3503
S1723, S1753 School Bus FA89, 91, 98	Fa	WG	15 " x 3 "	1245C - 321	R700321	R40H521	R40H9237	R40H3502	R40H3503
	Fm	WG	15 " x 3 "	1245A - 235	R700235	R40H521	R40H9201	R40H3524	R40H3524
S1723, S1753 School Bus RA184	Ra	WG	15 " x 4 "	4645A - 376	Discontinued	R40H597	R40H9200	R40H3540	R40H3541
	Rm	WG	15 " x 4 "	4645A - 376	Discontinued	R40H597	R40H9200	R40H3518	R404148
S1723, S1753 School Bus RA25, 184	Ra	WG	15 " x 5 "	1252 - 346	R700346	R40H597	R40H9200	R40H3540	R40H3541

MERITOR DRUM OR ROTOR NO.	CALIPER OR CYLINDER BORE SIZE	MERITOR CALIPER OR WHEEL CYLINDER (LEFT)	MERITOR CALIPER OR WHEEL CYLINDER (RIGHT)	MERITOR CALIPER OR WHEEL CYLINDER REPAIR KIT	MERITOR CALIPER PISTON	MERITOR MASTER CYLINDER	MERITOR MASTER CYLINDER KIT	MERITOR BRAKE HOSE (LEFT)	MERITOR BRAKE HOSE (RIGHT)
									ITE(Cont.)
170, 1700, 1710, 1723, 1724, 1750, 1753, 1754 SERIES CONVENTIONAL CAB, SCHOOL BUS, TILT CAB(Cont.)									
-	1-1/2 "	R4133580	R4133580	Discontinued	NR	-	-	-	-
-	1-1/2 "	R4133580	R4133580	Discontinued	NR	-	-	-	-
-	1-1/2 "	R4133580	R4133580	Discontinued	NR	-	-	-	-
-	1-1/2 "	R4133580	R4133580	Discontinued	NR	-	-	-	-
-	1-1/2 "	R4133580	R4133580	Discontinued	NR	-	-	-	-
-	1-5/8 "	R4133338	R4133338	R4166689	NR	-	-	-	-
-	1-5/8 "	R4133338	R4133338	R4166689	NR	-	-	-	-
-	1-5/8 "	R4133338	R4133338	R4166689	NR	-	-	-	-
-	1-5/8 "	R4133338	R4133338	R4166689	NR	-	-	-	-
-	1-5/8 "	R4133338	R4133338	R4166689	NR	-	-	-	-
-	1-5/8 "	R4133338	R4133338	R4166689	NR	-	-	-	-
-	1-5/8 "	R4133338	R4133338	R4166689	NR	-	-	-	-
-	1-5/8 "	R4133338	R4133338	R4166689	NR	-	-	-	-
-	1-3/4 "	R4133400	R4133400	R4166917	NR	-	-	-	-
-	1-3/4 "	R4133400	R4133400	R4166917	NR	-	-	-	-
-	1-1/4 "	R4133581	R4133582	R4166923	NR	-	-	-	-
-	1-1/4 "	R4133581	R4133582	R4166923	NR	-	-	-	-
-		-	-	-	-	-	-	-	-
-		-	-	-	-	-	-	-	-
-	1-1/4 "	R4133581	R4133582	R4166923	NR	-	-	-	-
-	1-1/4 "	R4133581	R4133582	R4166923	NR	-	-	-	-
-	1-1/8 "	R4133714	R4133715	R4166926	NR	-	-	-	-
-	1-1/8 "	R4133714	R4133715	R4166926	NR	-	-	-	-
-	1-1/4 "	R4133581	R4133582	R4166923	NR	-	-	-	-
-	1-1/4 "	R4133581	R4133582	R4166923	NR	-	-	-	-
-	1-1/4 "	R4133581	R4133582	R4166923	NR	-	-	-	-
-	1-1/4 "	R4133581	R4133582	R4166923	NR	-	-	-	-
-	1-1/4 "	R4133581	R4133582	R4166923	NR	-	-	-	-
-	1-1/4 "	R4133581	R4133582	R4166923	NR	-	-	-	-
-	1-1/4 "	R4133581	R4133582	R4166923	NR	-	-	-	-
-	1-1/4 "	R4133581	R4133582	R4166923	NR	-	-	-	-
-	1-1/4 "	R4133581	R4133582	R4166923	NR	-	-	-	-
-	1-1/2 "	R4133580	R4133580	Discontinued	NR	-	-	-	-
-	1-1/2 "	R4133580	R4133580	Discontinued	NR	-	-	-	-
-	1-1/2 "	R4133580	R4133580	Discontinued	NR	-	-	-	-

MAKE MODEL YEAR AXLE CODE AXLE WEIGHT	AXLE & BRK. TYPE	BRK. MFG.	BRAKE SIZE	FMSI	MERITOR DISC PAD OR BRAKE SHOE	MERITOR GUIDE PIN OR RETURN SPRING KIT	MERITOR CALIPER HWD. KIT OR RETURN SPRING KIT	MERITOR ADJUSTER KIT (LEFT WHEEL)	MERITOR ADJUSTER KIT (RIGHT WHEEL)
ITE(Cont.)									
170, 1700, 1710, 1723, 1724, 1750, 1753, 1754 SERIES CONVENTIONAL CAB, SCHOOL BUS, TILT CAB(Cont.)									
1977	Rm	WG	15 " x 5 "	1252 - 346	R700346	R40H597	R40H9200	R40H3518	R404148
S1723, S1753 School Bus RA29, 30, 187	Ra	WG	15 " x 5 "	1252 - 346	R700346	R40H597	R40H9200	R40H3540	R40H3541
	Rm	WG	15 " x 5 "	1252 - 346	R700346	R40H597	R40H9200	R40H3518	R404148
S1723, S1753 School Bus RA30, 187	Ra	WG	16 " x 5 "	1254 - 385	N/A	R40H597	R40H9200	NLA	NLA
	Rm	WG	16 " x 5 "	1254 - 385	N/A	R40H597	R40H9200	R404149	R404150
S1723, S1753 School Bus RA30, 39, 44, 186, 189	Ra	WG	15 " x 6 "	4596 - 381	R700381	R40H597	R40H9200	R40H3540	R40H3541
	Rm	WG	15 " x 6 "	4596 - 381	R700381	R40H597	R40H9200	R40H3518	R404148
S1723, S1753 School Bus RA39, 199	Ra	WG	15 " x 7 "	4597 - 383	R700383	R40H597	R40H9200	R40H3540	R40H3541
	Rm	WG	15 " x 7 "	4597 - 383	R700383	R40H597	R40H9200	R40H3518	R404148
S1723, S1753 School Bus RA44, 186	Ra	WG	15 " x 7 "	4597 - 383	R700383	R40H597	R40H9200	NLA	NLA
	Rm	WG	15 " x 7 "	4597 - 383	R700383	R40H597	R40H9200	R40H3518	R404148
S1723, S1753 School Bus RA47, 57	Ra	WG	16 " x 6 "	1255 - 386	N/A	R40H597	R40H9200	NLA	NLA
	Rm	WG	16 " x 6 "	1255 - 386	N/A	R40H597	R40H9200	R404149	R404150
S1724, S1754 Conventional FA109, 208	Fa	WG	15 " x 3 "	1245C - 321	R700321	R40H521	R40H9237	R40H3502	R40H3503
	Fm	WG	15 " x 3 "	1245A - 235	R700235	R40H521	R40H9201	R40H3524	R40H3524
S1724, S1754 Conventional FA118, 127, 139	Fa	WG	15 " x 5 "	1345A - 491	N/A	R40H521	R40H9237	R40H3502	R40H3503
	Fm	WG	15 " x 5 "	1345 - 490	N/A	R40H521	R40H9201	R40H3524	R40H3524
S1724, S1754 Conventional FA208	Fa	WG	15 " x 3-1/2 "	1280B - 322	R464004	R40H521	R40H9237	R40H3502	R40H3503
	Fm	WG	15 " x 3-1/2 "	1280 - 463	R700463	R40H521	R40H9201	R40H3524	R40H3524
S1724, S1754 Conventional FA48, 68, 70, 72	Fa	WG	14 " x 2-1/2 "	1294A - 325	N/A	R40H521	R40H9237	R40H3502	R40H3503
	Fm	WG	14 " x 2-1/2 "	1294 - 296	N/A	R40H521	R40H9201	R40H3524	R40H3524
S1724, S1754 Conventional FA71, 73, 101	Fa	WG	15 " x 3 "	1245C - 321	R700321	R40H521	R40H9237	R40H3502	R40H3503
	Fa	WG	15 " x 3-1/2 "	1280B - 322	R464004	R40H521	R40H9237	R40H3502	R40H3503
	Fm	WG	15 " x 3 "	1245A - 235	R700235	R40H521	R40H9201	R40H3524	R40H3524
	Fm	WG	15 " x 3-1/2 "	1280 - 463	R700463	R40H521	R40H9201	R40H3524	R40H3524
S1724, S1754 Conventional FA74	Fa	WG	15 " x 3 "	1245C - 321	R700321	R40H521	R40H9237	R40H3502	R40H3503
	Fm	WG	15 " x 3 "	1245A - 235	R700235	R40H521	R40H9201	R40H3524	R40H3524
S1724, S1754 Conventional FA78, 81	Fa	WG	15 " x 3 "	1245C - 321	R700321	R40H521	R40H9237	R40H3502	R40H3503
S1724, S1754 Conventional FA89, 91, 98	Fa	WG	15 " x 3 "	1245C - 321	R700321	R40H521	R40H9237	R40H3502	R40H3503
	Fm	WG	15 " x 3 "	1245A - 235	R700235	R40H521	R40H9201	R40H3524	R40H3524
S1724, S1754 Conventional RA184	Ra	WG	15 " x 4 "	4645A - 376	Discontinued	R40H597	R40H9200	R40H3540	R40H3541
	Rm	WG	15 " x 4 "	4645A - 376	Discontinued	R40H597	R40H9200	R40H3518	R404148
S1724, S1754 Conventional RA25, 184	Ra	WG	15 " x 5 "	1252 - 346	R700346	R40H597	R40H9200	R40H3540	R40H3541
	Rm	WG	15 " x 5 "	1252 - 346	R700346	R40H597	R40H9200	R40H3518	R404148
S1724, S1754 Conventional RA29, 30, 187	Ra	WG	15 " x 5 "	1252 - 346	R700346	R40H597	R40H9200	R40H3540	R40H3541
	Rm	WG	15 " x 5 "	1252 - 346	R700346	R40H597	R40H9200	R40H3518	R404148
S1724, S1754 Conventional RA30, 187	Ra	WG	16 " x 5 "	1254 - 385	N/A	R40H597	R40H9200	NLA	NLA
	Rm	WG	16 " x 5 "	1254 - 385	N/A	R40H597	R40H9200	R404149	R404150
S1724, S1754 Conventional RA30, 39, 44, 186, 189	Ra	WG	15 " x 6 "	4596 - 381	R700381	R40H597	R40H9200	R40H3540	R40H3541
	Rm	WG	15 " x 6 "	4596 - 381	R700381	R40H597	R40H9200	R40H3518	R404148
S1724, S1754 Conventional RA39, 199	Ra	WG	15 " x 7 "	4597 - 383	R700383	R40H597	R40H9200	R40H3540	R40H3541

MERITOR DRUM OR ROTOR NO.	CALIPER OR CYLINDER BORE SIZE	MERITOR CALIPER OR WHEEL CYLINDER (LEFT)	MERITOR CALIPER OR WHEEL CYLINDER (RIGHT)	MERITOR CALIPER OR WHEEL CYLINDER REPAIR KIT	MERITOR CALIPER PISTON	MERITOR MASTER CYLINDER	MERITOR MASTER CYLINDER KIT	MERITOR BRAKE HOSE (LEFT)	MERITOR BRAKE HOSE (RIGHT)
									ITE(Cont.)
170, 1700, 1710, 1723, 1724, 1750, 1753, 1754 SERIES CONVENTIONAL CAB, SCHOOL BUS, TILT CAB(Cont.)									
-	1-1/2 "	R4133580	R4133580	Discontinued	NR	-	-	-	-
-	1-1/2 "	R4133580	R4133580	Discontinued	NR	-	-	-	-
-	1-1/2 "	R4133580	R4133580	Discontinued	NR	-	-	-	-
-	1-5/8 "	R4133338	R4133338	R4166689	NR	-	-	-	-
-	1-5/8 "	R4133338	R4133338	R4166689	NR	-	-	-	-
-	1-5/8 "	R4133338	R4133338	R4166689	NR	-	-	-	-
-	1-5/8 "	R4133338	R4133338	R4166689	NR	-	-	-	-
-	1-5/8 "	R4133338	R4133338	R4166689	NR	-	-	-	-
-	1-5/8 "	R4133338	R4133338	R4166689	NR	-	-	-	-
-	1-5/8 "	R4133338	R4133338	R4166689	NR	-	-	-	-
-	1-3/4 "	R4133400	R4133400	R4166917	NR	-	-	-	-
-	1-3/4 "	R4133400	R4133400	R4166917	NR	-	-	-	-
-	1-1/4 "	R4133581	R4133582	R4166923	NR	-	-	-	-
-	1-1/4 "	R4133581	R4133582	R4166923	NR	-	-	-	-
-		-	-	-	-	-	-	-	-
-		-	-	-	-	-	-	-	-
-	1-1/4 "	R4133581	R4133582	R4166923	NR	-	-	-	-
-	1-1/4 "	R4133581	R4133582	R4166923	NR	-	-	-	-
-	1-1/8 "	R4133714	R4133715	R4166926	NR	-	-	-	-
-	1-1/8 "	R4133714	R4133715	R4166926	NR	-	-	-	-
-	1-1/4 "	R4133581	R4133582	R4166923	NR	-	-	-	-
-	1-1/4 "	R4133581	R4133582	R4166923	NR	-	-	-	-
-	1-1/4 "	R4133581	R4133582	R4166923	NR	-	-	-	-
-	1-1/4 "	R4133581	R4133582	R4166923	NR	-	-	-	-
-	1-1/4 "	R4133581	R4133582	R4166923	NR	-	-	-	-
-	1-1/4 "	R4133581	R4133582	R4166923	NR	-	-	-	-
-	1-1/4 "	R4133581	R4133582	R4166923	NR	-	-	-	-
-	1-1/4 "	R4133581	R4133582	R4166923	NR	-	-	-	-
-	1-1/4 "	R4133581	R4133582	R4166923	NR	-	-	-	-
-	1-1/4 "	R4133581	R4133582	R4166923	NR	-	-	-	-
-	1-1/2 "	R4133580	R4133580	Discontinued	NR	-	-	-	-
-	1-1/2 "	R4133580	R4133580	Discontinued	NR	-	-	-	-
-	1-1/2 "	R4133580	R4133580	Discontinued	NR	-	-	-	-
-	1-1/2 "	R4133580	R4133580	Discontinued	NR	-	-	-	-
-	1-1/2 "	R4133580	R4133580	Discontinued	NR	-	-	-	-
-	1-1/2 "	R4133580	R4133580	Discontinued	NR	-	-	-	-
-	1-5/8 "	R4133338	R4133338	R4166689	NR	-	-	-	-
-	1-5/8 "	R4133338	R4133338	R4166689	NR	-	-	-	-
-	1-5/8 "	R4133338	R4133338	R4166689	NR	-	-	-	-
-	1-5/8 "	R4133338	R4133338	R4166689	NR	-	-	-	-
-	1-5/8 "	R4133338	R4133338	R4166689	NR	-	-	-	-

MAKE MODEL YEAR AXLE CODE AXLE WEIGHT	AXLE & BRK. TYPE	BRK. MFG.	BRAKE SIZE	FMSI	MERITOR DISC PAD OR BRAKE SHOE	MERITOR GUIDE PIN OR RETURN SPRING KIT	MERITOR CALIPER HWD. KIT OR RETURN SPRING KIT	MERITOR ADJUSTER KIT (LEFT WHEEL)	MERITOR ADJUSTER KIT (RIGHT WHEEL)
ITE(Cont.)									
170, 1700, 1710, 1723, 1724, 1750, 1753, 1754 SERIES CONVENTIONAL CAB, SCHOOL BUS, TILT CAB(Cont.)									
1977	Rm	WG	15 " x 7 "	4597 - 383	R700383	R40H597	R40H9200	R40H3518	R404148
S1724, S1754 Conventional									
RA44, 186	Ra	WG	15 " x 7 "	4597 - 383	R700383	R40H597	R40H9200	NLA	NLA
	Rm	WG	15 " x 7 "	4597 - 383	R700383	R40H597	R40H9200	R40H3518	R404148
S1724, S1754 Conventional									
RA47, 57	Ra	WG	16 " x 6 "	1255 - 386	N/A	R40H597	R40H9200	NLA	NLA
	Rm	WG	16 " x 6 "	1255 - 386	N/A	R40H597	R40H9200	R404149	R404150
1976									
C1710, C1750 Cargostar Tilt Cab									
FA109, 208	Fa	WG	15 " x 3 "	1245C - 321	R700321	R40H521	R40H9237	R40H3502	R40H3503
	Fm	WG	15 " x 3 "	1245A - 235	R700235	R40H521	R40H9201	R40H3524	R40H3524
C1710, C1750 Cargostar Tilt Cab									
FA118, 127, 139	Fa	WG	15 " x 5 "	1345A - 491	N/A	R40H521	R40H9237	R40H3502	R40H3503
	Fm	WG	15 " x 5 "	1345 - 490	N/A	R40H521	R40H9201	R40H3524	R40H3524
C1710, C1750 Cargostar Tilt Cab									
FA208	Fa	WG	15 " x 3-1/2 "	1280B - 322	R464004	R40H521	R40H9237	R40H3502	R40H3503
	Fm	WG	15 " x 3-1/2 "	1280 - 463	R700463	R40H521	R40H9201	R40H3524	R40H3524
C1710, C1750 Cargostar Tilt Cab									
FA48, 68, 70, 72	Fa	WG	14 " x 2-1/2 "	1294A - 325	N/A	R40H521	R40H9237	R40H3502	R40H3503
	Fm	WG	14 " x 2-1/2 "	1294 - 296	N/A	R40H521	R40H9201	R40H3524	R40H3524
C1710, C1750 Cargostar Tilt Cab									
FA71, 73, 101	Fa	WG	15 " x 3 "	1245C - 321	R700321	R40H521	R40H9237	R40H3502	R40H3503
	Fa	WG	15 " x 3-1/2 "	1280B - 322	R464004	R40H521	R40H9237	R40H3502	R40H3503
	Fm	WG	15 " x 3 "	1245A - 235	R700235	R40H521	R40H9201	R40H3524	R40H3524
	Fm	WG	15 " x 3-1/2 "	1280 - 463	R700463	R40H521	R40H9201	R40H3524	R40H3524
C1710, C1750 Cargostar Tilt Cab									
FA74	Fa	WG	15 " x 3 "	1245C - 321	R700321	R40H521	R40H9237	R40H3502	R40H3503
	Fm	WG	15 " x 3 "	1245A - 235	R700235	R40H521	R40H9201	R40H3524	R40H3524
C1710, C1750 Cargostar Tilt Cab									
FA78, 81	Fa	WG	15 " x 3 "	1245C - 321	R700321	R40H521	R40H9237	R40H3502	R40H3503
C1710, C1750 Cargostar Tilt Cab									
FA89, 91, 98	Fa	WG	15 " x 3 "	1245C - 321	R700321	R40H521	R40H9237	R40H3502	R40H3503
	Fm	WG	15 " x 3 "	1245A - 235	R700235	R40H521	R40H9201	R40H3524	R40H3524
C1710, C1750 Cargostar Tilt Cab									
RA184	Ra	WG	15 " x 4 "	4645A - 376	Discontinued	R40H597	R40H9200	R40H3540	R40H3541
	Rm	WG	15 " x 4 "	4645A - 376	Discontinued	R40H597	R40H9200	R40H3518	R404148
C1710, C1750 Cargostar Tilt Cab									
RA25, 184	Ra	WG	15 " x 5 "	1252 - 346	R700346	R40H597	R40H9200	R40H3540	R40H3541
	Rm	WG	15 " x 5 "	1252 - 346	R700346	R40H597	R40H9200	R40H3518	R404148
C1710, C1750 Cargostar Tilt Cab									
RA29, 30, 187	Ra	WG	15 " x 5 "	1252 - 346	R700346	R40H597	R40H9200	R40H3540	R40H3541
	Rm	WG	15 " x 5 "	1252 - 346	R700346	R40H597	R40H9200	R40H3518	R404148
C1710, C1750 Cargostar Tilt Cab									
RA30, 187	Ra	WG	16 " x 5 "	1254 - 385	N/A	R40H597	R40H9200	NLA	NLA
	Rm	WG	16 " x 5 "	1254 - 385	N/A	R40H597	R40H9200	R404149	R404150
C1710, C1750 Cargostar Tilt Cab									
RA30, 39, 44, 186, 189	Ra	WG	15 " x 6 "	4596 - 381	R700381	R40H597	R40H9200	R40H3540	R40H3541
	Rm	WG	15 " x 6 "	4596 - 381	R700381	R40H597	R40H9200	R40H3518	R404148

MERITOR DRUM OR ROTOR NO.	CALIPER OR CYLINDER BORE SIZE	MERITOR CALIPER OR WHEEL CYLINDER (LEFT)	MERITOR CALIPER OR WHEEL CYLINDER (RIGHT)	MERITOR CALIPER OR WHEEL CYLINDER REPAIR KIT	MERITOR CALIPER PISTON	MERITOR MASTER CYLINDER	MERITOR MASTER CYLINDER KIT	MERITOR BRAKE HOSE (LEFT)	MERITOR BRAKE HOSE (RIGHT)
									ITE(Cont.)
170, 1700, 1710, 1723, 1724, 1750, 1753, 1754 SERIES CONVENTIONAL CAB, SCHOOL BUS, TILT CAB(Cont.)									
-	1-5/8 "	R4133338	R4133338	R4166689	NR	-	-	-	-
-	1-5/8 "	R4133338	R4133338	R4166689	NR	-	-	-	-
-	1-5/8 "	R4133338	R4133338	R4166689	NR	-	-	-	-
-	1-3/4 "	R4133400	R4133400	R4166917	NR	-	-	-	-
-	1-3/4 "	R4133400	R4133400	R4166917	NR	-	-	-	-
-	1-1/4 "	R4133581	R4133582	R4166923	NR	-	-	-	-
-	1-1/4 "	R4133581	R4133582	R4166923	NR	-	-	-	-
-		-	-	-	-	-	-	-	-
-		-	-	-	-	-	-	-	-
-	1-1/4 "	R4133581	R4133582	R4166923	NR	-	-	-	-
-	1-1/4 "	R4133581	R4133582	R4166923	NR	-	-	-	-
-	1-1/8 "	R4133714	R4133715	R4166926	NR	-	-	-	-
-	1-1/8 "	R4133714	R4133715	R4166926	NR	-	-	-	-
-	1-1/4 "	R4133581	R4133582	R4166923	NR	-	-	-	-
-	1-1/4 "	R4133581	R4133582	R4166923	NR	-	-	-	-
-	1-1/4 "	R4133581	R4133582	R4166923	NR	-	-	-	-
-	1-1/4 "	R4133581	R4133582	R4166923	NR	-	-	-	-
-	1-1/4 "	R4133581	R4133582	R4166923	NR	-	-	-	-
-	1-1/4 "	R4133581	R4133582	R4166923	NR	-	-	-	-
-	1-1/4 "	R4133581	R4133582	R4166923	NR	-	-	-	-
-	1-1/4 "	R4133581	R4133582	R4166923	NR	-	-	-	-
-	1-1/2 "	R4133580	R4133580	Discontinued	NR	-	-	-	-
-	1-1/2 "	R4133580	R4133580	Discontinued	NR	-	-	-	-
-	1-1/2 "	R4133580	R4133580	Discontinued	NR	-	-	-	-
-	1-1/2 "	R4133580	R4133580	Discontinued	NR	-	-	-	-
-	1-1/2 "	R4133580	R4133580	Discontinued	NR	-	-	-	-
-	1-1/2 "	R4133580	R4133580	Discontinued	NR	-	-	-	-
-	1-5/8 "	R4133338	R4133338	R4166689	NR	-	-	-	-
-	1-5/8 "	R4133338	R4133338	R4166689	NR	-	-	-	-
-	1-5/8 "	R4133338	R4133338	R4166689	NR	-	-	-	-
-	1-5/8 "	R4133338	R4133338	R4166689	NR	-	-	-	-

MAKE MODEL YEAR AXLE CODE AXLE WEIGHT	AXLE & BRK. TYPE	BRK. MFG.	BRAKE SIZE	FMSI	MERITOR DISC PAD OR BRAKE SHOE	MERITOR GUIDE PIN OR RETURN SPRING KIT	MERITOR CALIPER HWD. KIT OR RETURN SPRING KIT	MERITOR ADJUSTER KIT (LEFT WHEEL)	MERITOR ADJUSTER KIT (RIGHT WHEEL)
ITE(Cont.)									
170, 1700, 1710, 1723, 1724, 1750, 1753, 1754 SERIES CONVENTIONAL CAB, SCHOOL BUS, TILT CAB(Cont.)									
1976 C1710, C1750 Cargostar Tilt Cab RA39, 199	Ra	WG	15 " x 7 "	4597 - 383	R700383	R40H597	R40H9200	R40H3540	R40H3541
	Rm	WG	15 " x 7 "	4597 - 383	R700383	R40H597	R40H9200	R40H3518	R404148
C1710, C1750 Cargostar Tilt Cab RA44, 186	Ra	WG	15 " x 7 "	4597 - 383	R700383	R40H597	R40H9200	NLA	NLA
	Rm	WG	15 " x 7 "	4597 - 383	R700383	R40H597	R40H9200	R40H3518	R404148
C1710, C1750 Cargostar Tilt Cab RA47, 57	Ra	WG	16 " x 6 "	1255 - 386	N/A	R40H597	R40H9200	NLA	NLA
	Rm	WG	16 " x 6 "	1255 - 386	N/A	R40H597	R40H9200	R404149	R404150
S1723, S1753 School Bus FA109, 208	Fa	WG	15 " x 3 "	1245C - 321	R700321	R40H521	R40H9237	R40H3502	R40H3503
	Fm	WG	15 " x 3 "	1245A - 235	R700235	R40H521	R40H9201	R40H3524	R40H3524
S1723, S1753 School Bus FA118, 127, 139	Fa	WG	15 " x 5 "	1345A - 491	N/A	R40H521	R40H9237	R40H3502	R40H3503
	Fm	WG	15 " x 5 "	1345 - 490	N/A	R40H521	R40H9201	R40H3524	R40H3524
S1723, S1753 School Bus FA208	Fa	WG	15 " x 3-1/2 "	1280B - 322	R464004	R40H521	R40H9237	R40H3502	R40H3503
	Fm	WG	15 " x 3-1/2 "	1280 - 463	R700463	R40H521	R40H9201	R40H3524	R40H3524
S1723, S1753 School Bus FA48, 68, 70, 72	Fa	WG	14 " x 2-1/2 "	1294A - 325	N/A	R40H521	R40H9237	R40H3502	R40H3503
	Fm	WG	14 " x 2-1/2 "	1294 - 296	N/A	R40H521	R40H9201	R40H3524	R40H3524
S1723, S1753 School Bus FA71, 73, 101	Fa	WG	15 " x 3 "	1245C - 321	R700321	R40H521	R40H9237	R40H3502	R40H3503
	Fa	WG	15 " x 3-1/2 "	1280B - 322	R464004	R40H521	R40H9237	R40H3502	R40H3503
	Fm	WG	15 " x 3 "	1245A - 235	R700235	R40H521	R40H9201	R40H3524	R40H3524
	Fm	WG	15 " x 3-1/2 "	1280 - 463	R700463	R40H521	R40H9201	R40H3524	R40H3524
S1723, S1753 School Bus FA74	Fa	WG	15 " x 3 "	1245C - 321	R700321	R40H521	R40H9237	R40H3502	R40H3503
	Fm	WG	15 " x 3 "	1245A - 235	R700235	R40H521	R40H9201	R40H3524	R40H3524
S1723, S1753 School Bus FA78, 81	Fa	WG	15 " x 3 "	1245C - 321	R700321	R40H521	R40H9237	R40H3502	R40H3503
S1723, S1753 School Bus FA89, 91, 98	Fa	WG	15 " x 3 "	1245C - 321	R700321	R40H521	R40H9237	R40H3502	R40H3503
	Fm	WG	15 " x 3 "	1245A - 235	R700235	R40H521	R40H9201	R40H3524	R40H3524
S1723, S1753 School Bus RA184	Ra	WG	15 " x 4 "	4645A - 376	Discontinued	R40H597	R40H9200	R40H3540	R40H3541
	Rm	WG	15 " x 4 "	4645A - 376	Discontinued	R40H597	R40H9200	R40H3518	R404148
S1723, S1753 School Bus RA25, 184	Ra	WG	15 " x 5 "	1252 - 346	R700346	R40H597	R40H9200	R40H3540	R40H3541
	Rm	WG	15 " x 5 "	1252 - 346	R700346	R40H597	R40H9200	R40H3518	R404148
S1723, S1753 School Bus RA29, 30, 187	Ra	WG	15 " x 5 "	1252 - 346	R700346	R40H597	R40H9200	R40H3540	R40H3541
	Rm	WG	15 " x 5 "	1252 - 346	R700346	R40H597	R40H9200	R40H3518	R404148
S1723, S1753 School Bus RA30, 187	Ra	WG	16 " x 5 "	1254 - 385	N/A	R40H597	R40H9200	NLA	NLA
	Rm	WG	16 " x 5 "	1254 - 385	N/A	R40H597	R40H9200	R404149	R404150
S1723, S1753 School Bus RA30, 39, 44, 186, 189	Ra	WG	15 " x 6 "	4596 - 381	R700381	R40H597	R40H9200	R40H3540	R40H3541
	Rm	WG	15 " x 6 "	4596 - 381	R700381	R40H597	R40H9200	R40H3518	R404148
S1723, S1753 School Bus RA39, 199	Ra	WG	15 " x 7 "	4597 - 383	R700383	R40H597	R40H9200	R40H3540	R40H3541
	Rm	WG	15 " x 7 "	4597 - 383	R700383	R40H597	R40H9200	R40H3518	R404148
S1723, S1753 School Bus RA44, 186	Ra	WG	15 " x 7 "	4597 - 383	R700383	R40H597	R40H9200	NLA	NLA
	Rm	WG	15 " x 7 "	4597 - 383	R700383	R40H597	R40H9200	R40H3518	R404148
S1723, S1753 School Bus RA47, 57	Ra	WG	16 " x 6 "	1255 - 386	N/A	R40H597	R40H9200	NLA	NLA
	Rm	WG	16 " x 6 "	1255 - 386	N/A	R40H597	R40H9200	R404149	R404150

MERITOR DRUM OR ROTOR NO.	CALIPER OR CYLINDER BORE SIZE	MERITOR CALIPER OR WHEEL CYLINDER (LEFT)	MERITOR CALIPER OR WHEEL CYLINDER (RIGHT)	MERITOR CALIPER OR WHEEL CYLINDER REPAIR KIT	MERITOR CALIPER PISTON	MERITOR MASTER CYLINDER	MERITOR MASTER CYLINDER KIT	MERITOR BRAKE HOSE (LEFT)	MERITOR BRAKE HOSE (RIGHT)
									ITE(Cont.)
170, 1700, 1710, 1723, 1724, 1750, 1753, 1754 SERIES CONVENTIONAL CAB, SCHOOL BUS, TILT CAB(Cont.)									
-	1-5/8 "	R4133338	R4133338	R4166689	NR	-	-	-	-
-	1-5/8 "	R4133338	R4133338	R4166689	NR	-	-	-	-
-	1-5/8 "	R4133338	R4133338	R4166689	NR	-	-	-	-
-	1-5/8 "	R4133338	R4133338	R4166689	NR	-	-	-	-
-	1-3/4 "	R4133400	R4133400	R4166917	NR	-	-	-	-
-	1-3/4 "	R4133400	R4133400	R4166917	NR	-	-	-	-
-	1-1/4 "	R4133581	R4133582	R4166923	NR	-	-	-	-
-	1-1/4 "	R4133581	R4133582	R4166923	NR	-	-	-	-
-		-	-	-	-	-	-	-	-
-		-	-	-	-	-	-	-	-
-	1-1/4 "	R4133581	R4133582	R4166923	NR	-	-	-	-
-	1-1/4 "	R4133581	R4133582	R4166923	NR	-	-	-	-
-	1-1/8 "	R4133714	R4133715	R4166926	NR	-	-	-	-
-	1-1/8 "	R4133714	R4133715	R4166926	NR	-	-	-	-
-	1-1/4 "	R4133581	R4133582	R4166923	NR	-	-	-	-
-	1-1/4 "	R4133581	R4133582	R4166923	NR	-	-	-	-
-	1-1/4 "	R4133581	R4133582	R4166923	NR	-	-	-	-
-	1-1/4 "	R4133581	R4133582	R4166923	NR	-	-	-	-
-	1-1/4 "	R4133581	R4133582	R4166923	NR	-	-	-	-
-	1-1/4 "	R4133581	R4133582	R4166923	NR	-	-	-	-
-	1-1/4 "	R4133581	R4133582	R4166923	NR	-	-	-	-
-	1-1/4 "	R4133581	R4133582	R4166923	NR	-	-	-	-
-	1-1/4 "	R4133581	R4133582	R4166923	NR	-	-	-	-
-	1-1/2 "	R4133580	R4133580	Discontinued	NR	-	-	-	-
-	1-1/2 "	R4133580	R4133580	Discontinued	NR	-	-	-	-
-	1-1/2 "	R4133580	R4133580	Discontinued	NR	-	-	-	-
-	1-1/2 "	R4133580	R4133580	Discontinued	NR	-	-	-	-
-	1-1/2 "	R4133580	R4133580	Discontinued	NR	-	-	-	-
-	1-1/2 "	R4133580	R4133580	Discontinued	NR	-	-	-	-
-	1-5/8 "	R4133338	R4133338	R4166689	NR	-	-	-	-
-	1-5/8 "	R4133338	R4133338	R4166689	NR	-	-	-	-
-	1-5/8 "	R4133338	R4133338	R4166689	NR	-	-	-	-
-	1-5/8 "	R4133338	R4133338	R4166689	NR	-	-	-	-
-	1-5/8 "	R4133338	R4133338	R4166689	NR	-	-	-	-
-	1-5/8 "	R4133338	R4133338	R4166689	NR	-	-	-	-
-	1-5/8 "	R4133338	R4133338	R4166689	NR	-	-	-	-
-	1-5/8 "	R4133338	R4133338	R4166689	NR	-	-	-	-
-	1-3/4 "	R4133400	R4133400	R4166917	NR	-	-	-	-
-	1-3/4 "	R4133400	R4133400	R4166917	NR	-	-	-	-

MAKE MODEL YEAR AXLE CODE AXLE WEIGHT	AXLE & BRK. TYPE	BRK. MFG.	BRAKE SIZE	FMSI	MERITOR DISC PAD OR BRAKE SHOE	MERITOR GUIDE PIN OR RETURN SPRING KIT	MERITOR CALIPER HWD. KIT OR RETURN SPRING KIT	MERITOR ADJUSTER KIT (LEFT WHEEL)	MERITOR ADJUSTER KIT (RIGHT WHEEL)
ITE(Cont.)									
170, 1700, 1710, 1723, 1724, 1750, 1753, 1754 SERIES CONVENTIONAL CAB, SCHOOL BUS, TILT CAB(Cont.)									
1976 S1724, S1754 Conventional FA109, 208	Fa	WG	15 " x 3 "	1245C - 321	R700321	R40H521	R40H9237	R40H3502	R40H3503
	Fm	WG	15 " x 3 "	1245A - 235	R700235	R40H521	R40H9201	R40H3524	R40H3524
S1724, S1754 Conventional FA118, 127, 139	Fa	WG	15 " x 5 "	1345A - 491	N/A	R40H521	R40H9237	R40H3502	R40H3503
	Fm	WG	15 " x 5 "	1345 - 490	N/A	R40H521	R40H9201	R40H3524	R40H3524
S1724, S1754 Conventional FA208	Fa	WG	15 " x 3-1/2 "	1280B - 322	R464004	R40H521	R40H9237	R40H3502	R40H3503
	Fm	WG	15 " x 3-1/2 "	1280 - 463	R700463	R40H521	R40H9201	R40H3524	R40H3524
S1724, S1754 Conventional FA48, 68, 70, 72	Fa	WG	14 " x 2-1/2 "	1294A - 325	N/A	R40H521	R40H9237	R40H3502	R40H3503
	Fm	WG	14 " x 2-1/2 "	1294 - 296	N/A	R40H521	R40H9201	R40H3524	R40H3524
S1724, S1754 Conventional FA71, 73, 101	Fa	WG	15 " x 3 "	1245C - 321	R700321	R40H521	R40H9237	R40H3502	R40H3503
	Fa	WG	15 " x 3-1/2 "	1280B - 322	R464004	R40H521	R40H9237	R40H3502	R40H3503
	Fm	WG	15 " x 3 "	1245A - 235	R700235	R40H521	R40H9201	R40H3524	R40H3524
	Fm	WG	15 " x 3-1/2 "	1280 - 463	R700463	R40H521	R40H9201	R40H3524	R40H3524
S1724, S1754 Conventional FA74	Fa	WG	15 " x 3 "	1245C - 321	R700321	R40H521	R40H9237	R40H3502	R40H3503
	Fm	WG	15 " x 3 "	1245A - 235	R700235	R40H521	R40H9201	R40H3524	R40H3524
S1724, S1754 Conventional FA78, 81	Fa	WG	15 " x 3 "	1245C - 321	R700321	R40H521	R40H9237	R40H3502	R40H3503
S1724, S1754 Conventional FA89, 91, 98	Fa	WG	15 " x 3 "	1245C - 321	R700321	R40H521	R40H9237	R40H3502	R40H3503
	Fm	WG	15 " x 3 "	1245A - 235	R700235	R40H521	R40H9201	R40H3524	R40H3524
S1724, S1754 Conventional RA184	Ra	WG	15 " x 4 "	4645A - 376	Discontinued	R40H597	R40H9200	R40H3540	R40H3541
	Rm	WG	15 " x 4 "	4645A - 376	Discontinued	R40H597	R40H9200	R40H3518	R404148
S1724, S1754 Conventional RA25, 184	Ra	WG	15 " x 5 "	1252 - 346	R700346	R40H597	R40H9200	R40H3540	R40H3541
	Rm	WG	15 " x 5 "	1252 - 346	R700346	R40H597	R40H9200	R40H3518	R404148
S1724, S1754 Conventional RA29, 30, 187	Ra	WG	15 " x 5 "	1252 - 346	R700346	R40H597	R40H9200	R40H3540	R40H3541
	Rm	WG	15 " x 5 "	1252 - 346	R700346	R40H597	R40H9200	R40H3518	R404148
S1724, S1754 Conventional RA30, 187	Ra	WG	16 " x 5 "	1254 - 385	N/A	R40H597	R40H9200	NLA	NLA
	Rm	WG	16 " x 5 "	1254 - 385	N/A	R40H597	R40H9200	R404149	R404150
S1724, S1754 Conventional RA30, 39, 44, 186, 189	Ra	WG	15 " x 6 "	4596 - 381	R700381	R40H597	R40H9200	R40H3540	R40H3541
	Rm	WG	15 " x 6 "	4596 - 381	R700381	R40H597	R40H9200	R40H3518	R404148
S1724, S1754 Conventional RA39, 199	Ra	WG	15 " x 7 "	4597 - 383	R700383	R40H597	R40H9200	R40H3540	R40H3541
	Rm	WG	15 " x 7 "	4597 - 383	R700383	R40H597	R40H9200	R40H3518	R404148
S1724, S1754 Conventional RA44, 186	Ra	WG	15 " x 7 "	4597 - 383	R700383	R40H597	R40H9200	NLA	NLA
	Rm	WG	15 " x 7 "	4597 - 383	R700383	R40H597	R40H9200	R40H3518	R404148
S1724, S1754 Conventional RA47, 57	Ra	WG	16 " x 6 "	1255 - 386	N/A	R40H597	R40H9200	NLA	NLA
	Rm	WG	16 " x 6 "	1255 - 386	N/A	R40H597	R40H9200	R404149	R404150
1975 C1710, C1750 Cargostar Tilt Cab FA109, 208	Fa	WG	15 " x 3 "	1245C - 321	R700321	R40H521	R40H9237	R40H3502	R40H3503
	Fm	WG	15 " x 3 "	1245A - 235	R700235	R40H521	R40H9201	R40H3524	R40H3524
C1710, C1750 Cargostar Tilt Cab FA118, 127, 139	Fa	WG	15 " x 5 "	1345A - 491	N/A	R40H521	R40H9237	R40H3502	R40H3503
	Fm	WG	15 " x 5 "	1345 - 490	N/A	R40H521	R40H9201	R40H3524	R40H3524
C1710, C1750 Cargostar Tilt Cab FA208	Fa	WG	15 " x 3-1/2 "	1280B - 322	R464004	R40H521	R40H9237	R40H3502	R40H3503

MERITOR DRUM OR ROTOR NO.	CALIPER OR CYLINDER BORE SIZE	MERITOR CALIPER OR WHEEL CYLINDER (LEFT)	MERITOR CALIPER OR WHEEL CYLINDER (RIGHT)	MERITOR CALIPER OR WHEEL CYLINDER REPAIR KIT	MERITOR CALIPER PISTON	MERITOR MASTER CYLINDER	MERITOR MASTER CYLINDER KIT	MERITOR BRAKE HOSE (LEFT)	MERITOR BRAKE HOSE (RIGHT)
									ITE(Cont.)
170, 1700, 1710, 1723, 1724, 1750, 1753, 1754 SERIES CONVENTIONAL CAB, SCHOOL BUS, TILT CAB(Cont.)									
-	1-1/4 "	R4133581	R4133582	R4166923	NR	-	-	-	-
-	1-1/4 "	R4133581	R4133582	R4166923	NR	-	-	-	-
-		-	-	-	-	-	-	-	-
-		-	-	-	-	-	-	-	-
-	1-1/4 "	R4133581	R4133582	R4166923	NR	-	-	-	-
-	1-1/4 "	R4133581	R4133582	R4166923	NR	-	-	-	-
-	1-1/8 "	R4133714	R4133715	R4166926	NR	-	-	-	-
-	1-1/8 "	R4133714	R4133715	R4166926	NR	-	-	-	-
-	1-1/4 "	R4133581	R4133582	R4166923	NR	-	-	-	-
-	1-1/4 "	R4133581	R4133582	R4166923	NR	-	-	-	-
-	1-1/4 "	R4133581	R4133582	R4166923	NR	-	-	-	-
-	1-1/4 "	R4133581	R4133582	R4166923	NR	-	-	-	-
-	1-1/4 "	R4133581	R4133582	R4166923	NR	-	-	-	-
-	1-1/4 "	R4133581	R4133582	R4166923	NR	-	-	-	-
-	1-1/4 "	R4133581	R4133582	R4166923	NR	-	-	-	-
-	1-1/4 "	R4133581	R4133582	R4166923	NR	-	-	-	-
-	1-1/4 "	R4133581	R4133582	R4166923	NR	-	-	-	-
-	1-1/4 "	R4133581	R4133582	R4166923	NR	-	-	-	-
-	1-1/2 "	R4133580	R4133580	Discontinued	NR	-	-	-	-
-	1-1/2 "	R4133580	R4133580	Discontinued	NR	-	-	-	-
-	1-1/2 "	R4133580	R4133580	Discontinued	NR	-	-	-	-
-	1-1/2 "	R4133580	R4133580	Discontinued	NR	-	-	-	-
-	1-1/2 "	R4133580	R4133580	Discontinued	NR	-	-	-	-
-	1-1/2 "	R4133580	R4133580	Discontinued	NR	-	-	-	-
-	1-5/8 "	R4133338	R4133338	R4166689	NR	-	-	-	-
-	1-5/8 "	R4133338	R4133338	R4166689	NR	-	-	-	-
-	1-5/8 "	R4133338	R4133338	R4166689	NR	-	-	-	-
-	1-5/8 "	R4133338	R4133338	R4166689	NR	-	-	-	-
-	1-5/8 "	R4133338	R4133338	R4166689	NR	-	-	-	-
-	1-5/8 "	R4133338	R4133338	R4166689	NR	-	-	-	-
-	1-5/8 "	R4133338	R4133338	R4166689	NR	-	-	-	-
-	1-5/8 "	R4133338	R4133338	R4166689	NR	-	-	-	-
-	1-3/4 "	R4133400	R4133400	R4166917	NR	-	-	-	-
-	1-3/4 "	R4133400	R4133400	R4166917	NR	-	-	-	-
-	1-1/4 "	R4133581	R4133582	R4166923	NR	-	-	-	-
-	1-1/4 "	R4133581	R4133582	R4166923	NR	-	-	-	-
-		-	-	-	-	-	-	-	-
-		-	-	-	-	-	-	-	-
-	1-1/4 "	R4133581	R4133582	R4166923	NR	-	-	-	-

MAKE MODEL YEAR AXLE CODE AXLE WEIGHT	AXLE & BRK. TYPE	BRK. MFG.	BRAKE SIZE	FMSI	MERITOR DISC PAD OR BRAKE SHOE	MERITOR GUIDE PIN OR RETURN SPRING KIT	MERITOR CALIPER HWD. KIT OR RETURN SPRING KIT	MERITOR ADJUSTER KIT (LEFT WHEEL)	MERITOR ADJUSTER KIT (RIGHT WHEEL)
ITE(Cont.)									
170, 1700, 1710, 1723, 1724, 1750, 1753, 1754 SERIES CONVENTIONAL CAB, SCHOOL BUS, TILT CAB(Cont.)									
1975 C1710, C1750 Cargostar Tilt Cab FA208	Fm	WG	15 " x 3-1/2 "	1280 - 463	R700463	R40H521	R40H9201	R40H3524	R40H3524
C1710, C1750 Cargostar Tilt Cab FA48, 68, 70, 72	Fa	WG	14 " x 2-1/2 "	1294A - 325	N/A	R40H521	R40H9237	R40H3502	R40H3503
	Fm	WG	14 " x 2-1/2 "	1294 - 296	N/A	R40H521	R40H9201	R40H3524	R40H3524
C1710, C1750 Cargostar Tilt Cab FA71, 73, 101	Fa	WG	15 " x 3 "	1245C - 321	R700321	R40H521	R40H9237	R40H3502	R40H3503
	Fa	WG	15 " x 3-1/2 "	1280B - 322	R464004	R40H521	R40H9237	R40H3502	R40H3503
	Fm	WG	15 " x 3 "	1245A - 235	R700235	R40H521	R40H9201	R40H3524	R40H3524
	Fm	WG	15 " x 3-1/2 "	1280 - 463	R700463	R40H521	R40H9201	R40H3524	R40H3524
C1710, C1750 Cargostar Tilt Cab FA74	Fa	WG	15 " x 3 "	1245C - 321	R700321	R40H521	R40H9237	R40H3502	R40H3503
	Fm	WG	15 " x 3 "	1245A - 235	R700235	R40H521	R40H9201	R40H3524	R40H3524
C1710, C1750 Cargostar Tilt Cab FA78, 81	Fa	WG	15 " x 3 "	1245C - 321	R700321	R40H521	R40H9237	R40H3502	R40H3503
C1710, C1750 Cargostar Tilt Cab FA89, 91, 98	Fa	WG	15 " x 3 "	1245C - 321	R700321	R40H521	R40H9237	R40H3502	R40H3503
	Fm	WG	15 " x 3 "	1245A - 235	R700235	R40H521	R40H9201	R40H3524	R40H3524
C1710, C1750 Cargostar Tilt Cab RA184	Ra	WG	15 " x 4 "	4645A - 376	Discontinued	R40H597	R40H9200	R40H3540	R40H3541
	Rm	WG	15 " x 4 "	4645A - 376	Discontinued	R40H597	R40H9200	R40H3518	R404148
C1710, C1750 Cargostar Tilt Cab RA25, 184	Ra	WG	15 " x 5 "	1252 - 346	R700346	R40H597	R40H9200	R40H3540	R40H3541
	Rm	WG	15 " x 5 "	1252 - 346	R700346	R40H597	R40H9200	R40H3518	R404148
C1710, C1750 Cargostar Tilt Cab RA29, 30, 187	Ra	WG	15 " x 5 "	1252 - 346	R700346	R40H597	R40H9200	R40H3540	R40H3541
	Rm	WG	15 " x 5 "	1252 - 346	R700346	R40H597	R40H9200	R40H3518	R404148
C1710, C1750 Cargostar Tilt Cab RA30, 187	Ra	WG	16 " x 5 "	1254 - 385	N/A	R40H597	R40H9200	NLA	NLA
	Rm	WG	16 " x 5 "	1254 - 385	N/A	R40H597	R40H9200	R404149	R404150
C1710, C1750 Cargostar Tilt Cab RA30, 39, 44, 186, 189	Ra	WG	15 " x 6 "	4596 - 381	R700381	R40H597	R40H9200	R40H3540	R40H3541
	Rm	WG	15 " x 6 "	4596 - 381	R700381	R40H597	R40H9200	R40H3518	R404148
C1710, C1750 Cargostar Tilt Cab RA39, 199	Ra	WG	15 " x 7 "	4597 - 383	R700383	R40H597	R40H9200	R40H3540	R40H3541
	Rm	WG	15 " x 7 "	4597 - 383	R700383	R40H597	R40H9200	R40H3518	R404148
C1710, C1750 Cargostar Tilt Cab RA44, 186	Ra	WG	15 " x 7 "	4597 - 383	R700383	R40H597	R40H9200	NLA	NLA
	Rm	WG	15 " x 7 "	4597 - 383	R700383	R40H597	R40H9200	R40H3518	R404148
C1710, C1750 Cargostar Tilt Cab RA47, 57	Ra	WG	16 " x 6 "	1255 - 386	N/A	R40H597	R40H9200	NLA	NLA
	Rm	WG	16 " x 6 "	1255 - 386	N/A	R40H597	R40H9200	R404149	R404150
S1723, S1753 School Bus FA109, 208	Fa	WG	15 " x 3 "	1245C - 321	R700321	R40H521	R40H9237	R40H3502	R40H3503
	Fm	WG	15 " x 3 "	1245A - 235	R700235	R40H521	R40H9201	R40H3524	R40H3524
S1723, S1753 School Bus FA118, 127, 139	Fa	WG	15 " x 5 "	1345A - 491	N/A	R40H521	R40H9237	R40H3502	R40H3503
	Fm	WG	15 " x 5 "	1345 - 490	N/A	R40H521	R40H9201	R40H3524	R40H3524

MERITOR DRUM OR ROTOR NO.	CALIPER OR CYLINDER BORE SIZE	MERITOR CALIPER OR WHEEL CYLINDER (LEFT)	MERITOR CALIPER OR WHEEL CYLINDER (RIGHT)	MERITOR CALIPER OR WHEEL CYLINDER REPAIR KIT	MERITOR CALIPER PISTON	MERITOR MASTER CYLINDER	MERITOR MASTER CYLINDER KIT	MERITOR BRAKE HOSE (LEFT)	MERITOR BRAKE HOSE (RIGHT)
									ITE(Cont.)
170, 1700, 1710, 1723, 1724, 1750, 1753, 1754 SERIES CONVENTIONAL CAB, SCHOOL BUS, TILT CAB(Cont.)									
-	1-1/4 "	R4133581	R4133582	R4166923	NR	-	-	-	-
-	1-1/8 "	R4133714	R4133715	R4166926	NR	-	-	-	-
-	1-1/8 "	R4133714	R4133715	R4166926	NR	-	-	-	-
-	1-1/4 "	R4133581	R4133582	R4166923	NR	-	-	-	-
-	1-1/4 "	R4133581	R4133582	R4166923	NR	-	-	-	-
-	1-1/4 "	R4133581	R4133582	R4166923	NR	-	-	-	-
-	1-1/4 "	R4133581	R4133582	R4166923	NR	-	-	-	-
-	1-1/4 "	R4133581	R4133582	R4166923	NR	-	-	-	-
-	1-1/4 "	R4133581	R4133582	R4166923	NR	-	-	-	-
-	1-1/4 "	R4133581	R4133582	R4166923	NR	-	-	-	-
-	1-1/4 "	R4133581	R4133582	R4166923	NR	-	-	-	-
-	1-1/2 "	R4133580	R4133580	Discontinued	NR	-	-	-	-
-	1-1/2 "	R4133580	R4133580	Discontinued	NR	-	-	-	-
-	1-1/2 "	R4133580	R4133580	Discontinued	NR	-	-	-	-
-	1-1/2 "	R4133580	R4133580	Discontinued	NR	-	-	-	-
-	1-1/2 "	R4133580	R4133580	Discontinued	NR	-	-	-	-
-	1-1/2 "	R4133580	R4133580	Discontinued	NR	-	-	-	-
-	1-5/8 "	R4133338	R4133338	R4166689	NR	-	-	-	-
-	1-5/8 "	R4133338	R4133338	R4166689	NR	-	-	-	-
-	1-5/8 "	R4133338	R4133338	R4166689	NR	-	-	-	-
-	1-5/8 "	R4133338	R4133338	R4166689	NR	-	-	-	-
-	1-5/8 "	R4133338	R4133338	R4166689	NR	-	-	-	-
-	1-5/8 "	R4133338	R4133338	R4166689	NR	-	-	-	-
-	1-5/8 "	R4133338	R4133338	R4166689	NR	-	-	-	-
-	1-5/8 "	R4133338	R4133338	R4166689	NR	-	-	-	-
-	1-3/4 "	R4133400	R4133400	R4166917	NR	-	-	-	-
-	1-3/4 "	R4133400	R4133400	R4166917	NR	-	-	-	-
-	1-1/4 "	R4133581	R4133582	R4166923	NR	-	-	-	-
-	1-1/4 "	R4133581	R4133582	R4166923	NR	-	-	-	-
-		-	-	-	-	-	-	-	-
-		-	-	-	-	-	-	-	-

MAKE MODEL YEAR AXLE CODE AXLE WEIGHT	AXLE & BRK. TYPE	BRK. MFG.	BRAKE SIZE	FMSI	MERITOR DISC PAD OR BRAKE SHOE	MERITOR GUIDE PIN OR RETURN SPRING KIT	MERITOR CALIPER HWD. KIT OR RETURN SPRING KIT	MERITOR ADJUSTER KIT (LEFT WHEEL)	MERITOR ADJUSTER KIT (RIGHT WHEEL)
ITE(Cont.)									
170, 1700, 1710, 1723, 1724, 1750, 1753, 1754 SERIES CONVENTIONAL CAB, SCHOOL BUS, TILT CAB(Cont.)									
1975 S1723, S1753 School Bus FA208	Fa	WG	15 " x 3-1/2 "	1280B - 322	R464004	R40H521	R40H9237	R40H3502	R40H3503
	Fm	WG	15 " x 3-1/2 "	1280 - 463	R700463	R40H521	R40H9201	R40H3524	R40H3524
S1723, S1753 School Bus FA48, 68, 70, 72	Fa	WG	14 " x 2-1/2 "	1294A - 325	N/A	R40H521	R40H9237	R40H3502	R40H3503
	Fm	WG	14 " x 2-1/2 "	1294 - 296	N/A	R40H521	R40H9201	R40H3524	R40H3524
S1723, S1753 School Bus FA71, 73, 101	Fa	WG	15 " x 3 "	1245C - 321	R700321	R40H521	R40H9237	R40H3502	R40H3503
	Fa	WG	15 " x 3-1/2 "	1280B - 322	R464004	R40H521	R40H9237	R40H3502	R40H3503
	Fm	WG	15 " x 3 "	1245A - 235	R700235	R40H521	R40H9201	R40H3524	R40H3524
	Fm	WG	15 " x 3-1/2 "	1280 - 463	R700463	R40H521	R40H9201	R40H3524	R40H3524
S1723, S1753 School Bus FA74	Fa	WG	15 " x 3 "	1245C - 321	R700321	R40H521	R40H9237	R40H3502	R40H3503
	Fm	WG	15 " x 3 "	1245A - 235	R700235	R40H521	R40H9201	R40H3524	R40H3524
S1723, S1753 School Bus FA78, 81	Fa	WG	15 " x 3 "	1245C - 321	R700321	R40H521	R40H9237	R40H3502	R40H3503
S1723, S1753 School Bus FA89, 91, 98	Fa	WG	15 " x 3 "	1245C - 321	R700321	R40H521	R40H9237	R40H3502	R40H3503
	Fm	WG	15 " x 3 "	1245A - 235	R700235	R40H521	R40H9201	R40H3524	R40H3524
S1723, S1753 School Bus RA184	Ra	WG	15 " x 4 "	4645A - 376	Discontinued	R40H597	R40H9200	R40H3540	R40H3541
	Rm	WG	15 " x 4 "	4645A - 376	Discontinued	R40H597	R40H9200	R40H3518	R404148
S1723, S1753 School Bus RA25, 184	Ra	WG	15 " x 5 "	1252 - 346	R700346	R40H597	R40H9200	R40H3540	R40H3541
	Rm	WG	15 " x 5 "	1252 - 346	R700346	R40H597	R40H9200	R40H3518	R404148
S1723, S1753 School Bus RA29, 30, 187	Ra	WG	15 " x 5 "	1252 - 346	R700346	R40H597	R40H9200	R40H3540	R40H3541
	Rm	WG	15 " x 5 "	1252 - 346	R700346	R40H597	R40H9200	R40H3518	R404148
S1723, S1753 School Bus RA30, 187	Ra	WG	16 " x 5 "	1254 - 385	N/A	R40H597	R40H9200	NLA	NLA
	Rm	WG	16 " x 5 "	1254 - 385	N/A	R40H597	R40H9200	R404149	R404150
S1723, S1753 School Bus RA30, 39, 44, 186, 189	Ra	WG	15 " x 6 "	4596 - 381	R700381	R40H597	R40H9200	R40H3540	R40H3541
	Rm	WG	15 " x 6 "	4596 - 381	R700381	R40H597	R40H9200	R40H3518	R404148
S1723, S1753 School Bus RA39, 199	Ra	WG	15 " x 7 "	4597 - 383	R700383	R40H597	R40H9200	R40H3540	R40H3541
	Rm	WG	15 " x 7 "	4597 - 383	R700383	R40H597	R40H9200	R40H3518	R404148
S1723, S1753 School Bus RA44, 186	Ra	WG	15 " x 7 "	4597 - 383	R700383	R40H597	R40H9200	NLA	NLA
	Rm	WG	15 " x 7 "	4597 - 383	R700383	R40H597	R40H9200	R40H3518	R404148
S1723, S1753 School Bus RA47, 57	Ra	WG	16 " x 6 "	1255 - 386	N/A	R40H597	R40H9200	NLA	NLA
	Rm	WG	16 " x 6 "	1255 - 386	N/A	R40H597	R40H9200	R404149	R404150
S1724, S1754 Conventional FA109, 208	Fa	WG	15 " x 3 "	1245C - 321	R700321	R40H521	R40H9237	R40H3502	R40H3503
	Fm	WG	15 " x 3 "	1245A - 235	R700235	R40H521	R40H9201	R40H3524	R40H3524
S1724, S1754 Conventional FA118, 127, 139	Fa	WG	15 " x 5 "	1345A - 491	N/A	R40H521	R40H9237	R40H3502	R40H3503
	Fm	WG	15 " x 5 "	1345 - 490	N/A	R40H521	R40H9201	R40H3524	R40H3524
S1724, S1754 Conventional FA208	Fa	WG	15 " x 3-1/2 "	1280B - 322	R464004	R40H521	R40H9237	R40H3502	R40H3503
	Fm	WG	15 " x 3-1/2 "	1280 - 463	R700463	R40H521	R40H9201	R40H3524	R40H3524
S1724, S1754 Conventional FA48, 68, 70, 72	Fa	WG	14 " x 2-1/2 "	1294A - 325	N/A	R40H521	R40H9237	R40H3502	R40H3503
	Fm	WG	14 " x 2-1/2 "	1294 - 296	N/A	R40H521	R40H9201	R40H3524	R40H3524
S1724, S1754 Conventional FA71, 73, 101	Fa	WG	15 " x 3 "	1245C - 321	R700321	R40H521	R40H9237	R40H3502	R40H3503
	Fa	WG	15 " x 3-1/2 "	1280B - 322	R464004	R40H521	R40H9237	R40H3502	R40H3503
	Fm	WG	15 " x 3 "	1245A - 235	R700235	R40H521	R40H9201	R40H3524	R40H3524
	Fm	WG	15 " x 3-1/2 "	1280 - 463	R700463	R40H521	R40H9201	R40H3524	R40H3524
S1724, S1754 Conventional FA74	Fa	WG	15 " x 3 "	1245C - 321	R700321	R40H521	R40H9237	R40H3502	R40H3503

MERITOR DRUM OR ROTOR NO.	CALIPER OR CYLINDER BORE SIZE	MERITOR CALIPER OR WHEEL CYLINDER (LEFT)	MERITOR CALIPER OR WHEEL CYLINDER (RIGHT)	MERITOR CALIPER OR WHEEL CYLINDER REPAIR KIT	MERITOR CALIPER PISTON	MERITOR MASTER CYLINDER	MERITOR MASTER CYLINDER KIT	MERITOR BRAKE HOSE (LEFT)	MERITOR BRAKE HOSE (RIGHT)
									ITE(Cont.)
170, 1700, 1710, 1723, 1724, 1750, 1753, 1754 SERIES CONVENTIONAL CAB, SCHOOL BUS, TILT CAB(Cont.)									
-	1-1/4 "	R4133581	R4133582	R4166923	NR	-	-	-	-
-	1-1/4 "	R4133581	R4133582	R4166923	NR	-	-	-	-
-	1-1/8 "	R4133714	R4133715	R4166926	NR	-	-	-	-
-	1-1/8 "	R4133714	R4133715	R4166926	NR	-	-	-	-
-	1-1/4 "	R4133581	R4133582	R4166923	NR	-	-	-	-
-	1-1/4 "	R4133581	R4133582	R4166923	NR	-	-	-	-
-	1-1/4 "	R4133581	R4133582	R4166923	NR	-	-	-	-
-	1-1/4 "	R4133581	R4133582	R4166923	NR	-	-	-	-
-	1-1/4 "	R4133581	R4133582	R4166923	NR	-	-	-	-
-	1-1/4 "	R4133581	R4133582	R4166923	NR	-	-	-	-
-	1-1/4 "	R4133581	R4133582	R4166923	NR	-	-	-	-
-	1-1/4 "	R4133581	R4133582	R4166923	NR	-	-	-	-
-	1-1/4 "	R4133581	R4133582	R4166923	NR	-	-	-	-
-	1-1/2 "	R4133580	R4133580	Discontinued	NR	-	-	-	-
-	1-1/2 "	R4133580	R4133580	Discontinued	NR	-	-	-	-
-	1-1/2 "	R4133580	R4133580	Discontinued	NR	-	-	-	-
-	1-1/2 "	R4133580	R4133580	Discontinued	NR	-	-	-	-
-	1-1/2 "	R4133580	R4133580	Discontinued	NR	-	-	-	-
-	1-1/2 "	R4133580	R4133580	Discontinued	NR	-	-	-	-
-	1-5/8 "	R4133338	R4133338	R4166689	NR	-	-	-	-
-	1-5/8 "	R4133338	R4133338	R4166689	NR	-	-	-	-
-	1-5/8 "	R4133338	R4133338	R4166689	NR	-	-	-	-
-	1-5/8 "	R4133338	R4133338	R4166689	NR	-	-	-	-
-	1-5/8 "	R4133338	R4133338	R4166689	NR	-	-	-	-
-	1-5/8 "	R4133338	R4133338	R4166689	NR	-	-	-	-
-	1-5/8 "	R4133338	R4133338	R4166689	NR	-	-	-	-
-	1-5/8 "	R4133338	R4133338	R4166689	NR	-	-	-	-
-	1-3/4 "	R4133400	R4133400	R4166917	NR	-	-	-	-
-	1-3/4 "	R4133400	R4133400	R4166917	NR	-	-	-	-
-	1-1/4 "	R4133581	R4133582	R4166923	NR	-	-	-	-
-	1-1/4 "	R4133581	R4133582	R4166923	NR	-	-	-	-
-		-	-	-	-	-	-	-	-
-		-	-	-	-	-	-	-	-
-	1-1/4 "	R4133581	R4133582	R4166923	NR	-	-	-	-
-	1-1/4 "	R4133581	R4133582	R4166923	NR	-	-	-	-
-	1-1/8 "	R4133714	R4133715	R4166926	NR	-	-	-	-
-	1-1/8 "	R4133714	R4133715	R4166926	NR	-	-	-	-
-	1-1/4 "	R4133581	R4133582	R4166923	NR	-	-	-	-
-	1-1/4 "	R4133581	R4133582	R4166923	NR	-	-	-	-
-	1-1/4 "	R4133581	R4133582	R4166923	NR	-	-	-	-
-	1-1/4 "	R4133581	R4133582	R4166923	NR	-	-	-	-
-	1-1/4 "	R4133581	R4133582	R4166923	NR	-	-	-	-

MAKE MODEL YEAR AXLE CODE AXLE WEIGHT	AXLE & BRK. TYPE	BRK. MFG.	BRAKE SIZE	FMSI	MERITOR DISC PAD OR BRAKE SHOE	MERITOR GUIDE PIN OR RETURN SPRING KIT	MERITOR CALIPER HWD. KIT OR RETURN SPRING KIT	MERITOR ADJUSTER KIT (LEFT WHEEL)	MERITOR ADJUSTER KIT (RIGHT WHEEL)
ITE(Cont.)									
170, 1700, 1710, 1723, 1724, 1750, 1753, 1754 SERIES CONVENTIONAL CAB, SCHOOL BUS, TILT CAB(Cont.)									
1975									
	Fm	WG	15 " x 3 "	1245A - 235	R700235	R40H521	R40H9201	R40H3524	R40H3524
S1724, S1754 Conventional									
FA78, 81	Fa	WG	15 " x 3 "	1245C - 321	R700321	R40H521	R40H9237	R40H3502	R40H3503
S1724, S1754 Conventional									
FA89, 91, 98	Fa	WG	15 " x 3 "	1245C - 321	R700321	R40H521	R40H9237	R40H3502	R40H3503
	Fm	WG	15 " x 3 "	1245A - 235	R700235	R40H521	R40H9201	R40H3524	R40H3524
S1724, S1754 Conventional									
RA184	Ra	WG	15 " x 4 "	4645A - 376	Discontinued	R40H597	R40H9200	R40H3540	R40H3541
	Rm	WG	15 " x 4 "	4645A - 376	Discontinued	R40H597	R40H9200	R40H3518	R404148
S1724, S1754 Conventional									
RA25, 184	Ra	WG	15 " x 5 "	1252 - 346	R700346	R40H597	R40H9200	R40H3540	R40H3541
	Rm	WG	15 " x 5 "	1252 - 346	R700346	R40H597	R40H9200	R40H3518	R404148
S1724, S1754 Conventional									
RA29, 30, 187	Ra	WG	15 " x 5 "	1252 - 346	R700346	R40H597	R40H9200	R40H3540	R40H3541
	Rm	WG	15 " x 5 "	1252 - 346	R700346	R40H597	R40H9200	R40H3518	R404148
S1724, S1754 Conventional									
RA30, 187	Ra	WG	16 " x 5 "	1254 - 385	N/A	R40H597	R40H9200	NLA	NLA
	Rm	WG	16 " x 5 "	1254 - 385	N/A	R40H597	R40H9200	R404149	R404150
S1724, S1754 Conventional									
RA30, 39, 44, 186, 189	Ra	WG	15 " x 6 "	4596 - 381	R700381	R40H597	R40H9200	R40H3540	R40H3541
	Rm	WG	15 " x 6 "	4596 - 381	R700381	R40H597	R40H9200	R40H3518	R404148
S1724, S1754 Conventional									
RA39, 199	Ra	WG	15 " x 7 "	4597 - 383	R700383	R40H597	R40H9200	R40H3540	R40H3541
	Rm	WG	15 " x 7 "	4597 - 383	R700383	R40H597	R40H9200	R40H3518	R404148
S1724, S1754 Conventional									
RA44, 186	Ra	WG	15 " x 7 "	4597 - 383	R700383	R40H597	R40H9200	NLA	NLA
	Rm	WG	15 " x 7 "	4597 - 383	R700383	R40H597	R40H9200	R40H3518	R404148
S1724, S1754 Conventional									
RA47, 57	Ra	WG	16 " x 6 "	1255 - 386	N/A	R40H597	R40H9200	NLA	NLA
	Rm	WG	16 " x 6 "	1255 - 386	N/A	R40H597	R40H9200	R404149	R404150
1974									
C1710, C1750 Cargostar Tilt Cab									
FA109, 208	Fa	WG	15 " x 3 "	1245C - 321	R700321	R40H521	R40H9237	R40H3502	R40H3503
	Fm	WG	15 " x 3 "	1245A - 235	R700235	R40H521	R40H9201	R40H3524	R40H3524
C1710, C1750 Cargostar Tilt Cab									
FA118, 127, 139	Fa	WG	15 " x 5 "	1345A - 491	N/A	R40H521	R40H9237	R40H3502	R40H3503
	Fm	WG	15 " x 5 "	1345 - 490	N/A	R40H521	R40H9201	R40H3524	R40H3524
C1710, C1750 Cargostar Tilt Cab									
FA208	Fa	WG	15 " x 3-1/2 "	1280B - 322	R464004	R40H521	R40H9237	R40H3502	R40H3503
	Fm	WG	15 " x 3-1/2 "	1280 - 463	R700463	R40H521	R40H9201	R40H3524	R40H3524
C1710, C1750 Cargostar Tilt Cab									
FA48, 68, 70, 72	Fa	WG	14 " x 2-1/2 "	1294A - 325	N/A	R40H521	R40H9237	R40H3502	R40H3503
	Fm	WG	14 " x 2-1/2 "	1294 - 296	N/A	R40H521	R40H9201	R40H3524	R40H3524
C1710, C1750 Cargostar Tilt Cab									
FA71, 73, 101	Fa	WG	15 " x 3 "	1245C - 321	R700321	R40H521	R40H9237	R40H3502	R40H3503
	Fa	WG	15 " x 3-1/2 "	1280B - 322	R464004	R40H521	R40H9237	R40H3502	R40H3503
	Fm	WG	15 " x 3 "	1245A - 235	R700235	R40H521	R40H9201	R40H3524	R40H3524
	Fm	WG	15 " x 3-1/2 "	1280 - 463	R700463	R40H521	R40H9201	R40H3524	R40H3524
C1710, C1750 Cargostar Tilt Cab									
FA74	Fa	WG	15 " x 3 "	1245C - 321	R700321	R40H521	R40H9237	R40H3502	R40H3503
	Fm	WG	15 " x 3 "	1245A - 235	R700235	R40H521	R40H9201	R40H3524	R40H3524
C1710, C1750 Cargostar Tilt Cab									
FA78, 81	Fa	WG	15 " x 3 "	1245C - 321	R700321	R40H521	R40H9237	R40H3502	R40H3503
C1710, C1750 Cargostar Tilt Cab									
FA89, 91, 98	Fa	WG	15 " x 3 "	1245C - 321	R700321	R40H521	R40H9237	R40H3502	R40H3503

MERITOR DRUM OR ROTOR NO.	CALIPER OR CYLINDER BORE SIZE	MERITOR CALIPER OR WHEEL CYLINDER (LEFT)	MERITOR CALIPER OR WHEEL CYLINDER (RIGHT)	MERITOR CALIPER OR WHEEL CYLINDER REPAIR KIT	MERITOR CALIPER PISTON	MERITOR MASTER CYLINDER	MERITOR MASTER CYLINDER KIT	MERITOR BRAKE HOSE (LEFT)	MERITOR BRAKE HOSE (RIGHT)
									ITE(Cont.)
170, 1700, 1710, 1723, 1724, 1750, 1753, 1754 SERIES CONVENTIONAL CAB, SCHOOL BUS, TILT CAB(Cont.)									
-	1-1/4 "	R4133581	R4133582	R4166923	NR	-	-	-	-
-	1-1/4 "	R4133581	R4133582	R4166923	NR	-	-	-	-
-	1-1/4 "	R4133581	R4133582	R4166923	NR	-	-	-	-
-	1-1/4 "	R4133581	R4133582	R4166923	NR	-	-	-	-
-	1-1/2 "	R4133580	R4133580	Discontinued	NR	-	-	-	-
-	1-1/2 "	R4133580	R4133580	Discontinued	NR	-	-	-	-
-	1-1/2 "	R4133580	R4133580	Discontinued	NR	-	-	-	-
-	1-1/2 "	R4133580	R4133580	Discontinued	NR	-	-	-	-
-	1-1/2 "	R4133580	R4133580	Discontinued	NR	-	-	-	-
-	1-1/2 "	R4133580	R4133580	Discontinued	NR	-	-	-	-
-	1-5/8 "	R4133338	R4133338	R4166689	NR	-	-	-	-
-	1-5/8 "	R4133338	R4133338	R4166689	NR	-	-	-	-
-	1-5/8 "	R4133338	R4133338	R4166689	NR	-	-	-	-
-	1-5/8 "	R4133338	R4133338	R4166689	NR	-	-	-	-
-	1-5/8 "	R4133338	R4133338	R4166689	NR	-	-	-	-
-	1-5/8 "	R4133338	R4133338	R4166689	NR	-	-	-	-
-	1-5/8 "	R4133338	R4133338	R4166689	NR	-	-	-	-
-	1-5/8 "	R4133338	R4133338	R4166689	NR	-	-	-	-
-	1-3/4 "	R4133400	R4133400	R4166917	NR	-	-	-	-
-	1-3/4 "	R4133400	R4133400	R4166917	NR	-	-	-	-
-	1-1/4 "	R4133581	R4133582	R4166923	NR	-	-	-	-
-	1-1/4 "	R4133581	R4133582	R4166923	NR	-	-	-	-
-		-	-	-	-	-	-	-	-
-		-	-	-	-	-	-	-	-
-	1-1/4 "	R4133581	R4133582	R4166923	NR	-	-	-	-
-	1-1/4 "	R4133581	R4133582	R4166923	NR	-	-	-	-
-	1-1/8 "	R4133714	R4133715	R4166926	NR	-	-	-	-
-	1-1/8 "	R4133714	R4133715	R4166926	NR	-	-	-	-
-	1-1/4 "	R4133581	R4133582	R4166923	NR	-	-	-	-
-	1-1/4 "	R4133581	R4133582	R4166923	NR	-	-	-	-
-	1-1/4 "	R4133581	R4133582	R4166923	NR	-	-	-	-
-	1-1/4 "	R4133581	R4133582	R4166923	NR	-	-	-	-
-	1-1/4 "	R4133581	R4133582	R4166923	NR	-	-	-	-
-	1-1/4 "	R4133581	R4133582	R4166923	NR	-	-	-	-
-	1-1/4 "	R4133581	R4133582	R4166923	NR	-	-	-	-
-	1-1/4 "	R4133581	R4133582	R4166923	NR	-	-	-	-

MAKE MODEL YEAR AXLE CODE AXLE WEIGHT	AXLE & BRK. TYPE	BRK. MFG.	BRAKE SIZE	FMSI	MERITOR DISC PAD OR BRAKE SHOE	MERITOR GUIDE PIN OR RETURN SPRING KIT	MERITOR CALIPER HWD. KIT OR RETURN SPRING KIT	MERITOR ADJUSTER KIT (LEFT WHEEL)	MERITOR ADJUSTER KIT (RIGHT WHEEL)
ITE(Cont.)									
170, 1700, 1710, 1723, 1724, 1750, 1753, 1754 SERIES CONVENTIONAL CAB, SCHOOL BUS, TILT CAB(Cont.)									
1974	Fm	WG	15 " x 3 "	1245A - 235	R700235	R40H521	R40H9201	R40H3524	R40H3524
C1710, C1750 Cargostar Tilt Cab RA184	Ra	WG	15 " x 4 "	4645A - 376	Discontinued	R40H597	R40H9200	R40H3540	R40H3541
	Rm	WG	15 " x 4 "	4645A - 376	Discontinued	R40H597	R40H9200	R40H3518	R404148
C1710, C1750 Cargostar Tilt Cab RA25, 184	Ra	WG	15 " x 5 "	1252 - 346	R700346	R40H597	R40H9200	R40H3540	R40H3541
	Rm	WG	15 " x 5 "	1252 - 346	R700346	R40H597	R40H9200	R40H3518	R404148
C1710, C1750 Cargostar Tilt Cab RA29, 30, 187	Ra	WG	15 " x 5 "	1252 - 346	R700346	R40H597	R40H9200	R40H3540	R40H3541
	Rm	WG	15 " x 5 "	1252 - 346	R700346	R40H597	R40H9200	R40H3518	R404148
C1710, C1750 Cargostar Tilt Cab RA30, 187	Ra	WG	16 " x 5 "	1254 - 385	N/A	R40H597	R40H9200	NLA	NLA
	Rm	WG	16 " x 5 "	1254 - 385	N/A	R40H597	R40H9200	R404149	R404150
C1710, C1750 Cargostar Tilt Cab RA30, 39, 44, 186, 189	Ra	WG	15 " x 6 "	4596 - 381	R700381	R40H597	R40H9200	R40H3540	R40H3541
	Rm	WG	15 " x 6 "	4596 - 381	R700381	R40H597	R40H9200	R40H3518	R404148
C1710, C1750 Cargostar Tilt Cab RA39, 199	Ra	WG	15 " x 7 "	4597 - 383	R700383	R40H597	R40H9200	R40H3540	R40H3541
	Rm	WG	15 " x 7 "	4597 - 383	R700383	R40H597	R40H9200	R40H3518	R404148
C1710, C1750 Cargostar Tilt Cab RA44, 186	Ra	WG	15 " x 7 "	4597 - 383	R700383	R40H597	R40H9200	NLA	NLA
	Rm	WG	15 " x 7 "	4597 - 383	R700383	R40H597	R40H9200	R40H3518	R404148
C1710, C1750 Cargostar Tilt Cab RA47, 57	Ra	WG	16 " x 6 "	1255 - 386	N/A	R40H597	R40H9200	NLA	NLA
	Rm	WG	16 " x 6 "	1255 - 386	N/A	R40H597	R40H9200	R404149	R404150
S1723, S1753 School Bus FA109, 208	Fa	WG	15 " x 3 "	1245C - 321	R700321	R40H521	R40H9237	R40H3502	R40H3503
	Fm	WG	15 " x 3 "	1245A - 235	R700235	R40H521	R40H9201	R40H3524	R40H3524
S1723, S1753 School Bus FA118, 127, 139	Fa	WG	15 " x 5 "	1345A - 491	N/A	R40H521	R40H9237	R40H3502	R40H3503
	Fm	WG	15 " x 5 "	1345 - 490	N/A	R40H521	R40H9201	R40H3524	R40H3524
S1723, S1753 School Bus FA208	Fa	WG	15 " x 3-1/2 "	1280B - 322	R464004	R40H521	R40H9237	R40H3502	R40H3503
	Fm	WG	15 " x 3-1/2 "	1280 - 463	R700463	R40H521	R40H9201	R40H3524	R40H3524
S1723, S1753 School Bus FA48, 68, 70, 72	Fa	WG	14 " x 2-1/2 "	1294A - 325	N/A	R40H521	R40H9237	R40H3502	R40H3503
	Fm	WG	14 " x 2-1/2 "	1294 - 296	N/A	R40H521	R40H9201	R40H3524	R40H3524
S1723, S1753 School Bus FA71, 73, 101	Fa	WG	15 " x 3 "	1245C - 321	R700321	R40H521	R40H9237	R40H3502	R40H3503
	Fa	WG	15 " x 3-1/2 "	1280B - 322	R464004	R40H521	R40H9237	R40H3502	R40H3503
	Fm	WG	15 " x 3 "	1245A - 235	R700235	R40H521	R40H9201	R40H3524	R40H3524
	Fm	WG	15 " x 3-1/2 "	1280 - 463	R700463	R40H521	R40H9201	R40H3524	R40H3524
S1723, S1753 School Bus FA74	Fa	WG	15 " x 3 "	1245C - 321	R700321	R40H521	R40H9237	R40H3502	R40H3503
	Fm	WG	15 " x 3 "	1245A - 235	R700235	R40H521	R40H9201	R40H3524	R40H3524
S1723, S1753 School Bus FA78, 81	Fa	WG	15 " x 3 "	1245C - 321	R700321	R40H521	R40H9237	R40H3502	R40H3503
S1723, S1753 School Bus FA89, 91, 98	Fa	WG	15 " x 3 "	1245C - 321	R700321	R40H521	R40H9237	R40H3502	R40H3503
	Fm	WG	15 " x 3 "	1245A - 235	R700235	R40H521	R40H9201	R40H3524	R40H3524
S1723, S1753 School Bus RA184	Ra	WG	15 " x 4 "	4645A - 376	Discontinued	R40H597	R40H9200	R40H3540	R40H3541
	Rm	WG	15 " x 4 "	4645A - 376	Discontinued	R40H597	R40H9200	R40H3518	R404148

MERITOR DRUM OR ROTOR NO.	CALIPER OR CYLINDER BORE SIZE	MERITOR CALIPER OR WHEEL CYLINDER (LEFT)	MERITOR CALIPER OR WHEEL CYLINDER (RIGHT)	MERITOR CALIPER OR WHEEL CYLINDER REPAIR KIT	MERITOR CALIPER PISTON	MERITOR MASTER CYLINDER	MERITOR MASTER CYLINDER KIT	MERITOR BRAKE HOSE (LEFT)	MERITOR BRAKE HOSE (RIGHT)
ITE(Cont.)									
170, 1700, 1710, 1723, 1724, 1750, 1753, 1754 SERIES CONVENTIONAL CAB, SCHOOL BUS, TILT CAB(Cont.)									
-	1-1/4 "	R4133581	R4133582	R4166923	NR	-	-	-	-
-	1-1/2 "	R4133580	R4133580	Discontinued	NR	-	-	-	-
-	1-1/2 "	R4133580	R4133580	Discontinued	NR	-	-	-	-
-	1-1/2 "	R4133580	R4133580	Discontinued	NR	-	-	-	-
-	1-1/2 "	R4133580	R4133580	Discontinued	NR	-	-	-	-
-	1-1/2 "	R4133580	R4133580	Discontinued	NR	-	-	-	-
-	1-1/2 "	R4133580	R4133580	Discontinued	NR	-	-	-	-
-	1-5/8 "	R4133338	R4133338	R4166689	NR	-	-	-	-
-	1-5/8 "	R4133338	R4133338	R4166689	NR	-	-	-	-
-	1-5/8 "	R4133338	R4133338	R4166689	NR	-	-	-	-
-	1-5/8 "	R4133338	R4133338	R4166689	NR	-	-	-	-
-	1-5/8 "	R4133338	R4133338	R4166689	NR	-	-	-	-
-	1-5/8 "	R4133338	R4133338	R4166689	NR	-	-	-	-
-	1-5/8 "	R4133338	R4133338	R4166689	NR	-	-	-	-
-	1-5/8 "	R4133338	R4133338	R4166689	NR	-	-	-	-
-	1-3/4 "	R4133400	R4133400	R4166917	NR	-	-	-	-
-	1-3/4 "	R4133400	R4133400	R4166917	NR	-	-	-	-
-	1-1/4 "	R4133581	R4133582	R4166923	NR	-	-	-	-
-	1-1/4 "	R4133581	R4133582	R4166923	NR	-	-	-	-
-		-	-	-	-	-	-	-	-
-		-	-	-	-	-	-	-	-
-	1-1/4 "	R4133581	R4133582	R4166923	NR	-	-	-	-
-	1-1/4 "	R4133581	R4133582	R4166923	NR	-	-	-	-
-	1-1/8 "	R4133714	R4133715	R4166926	NR	-	-	-	-
-	1-1/8 "	R4133714	R4133715	R4166926	NR	-	-	-	-
-	1-1/4 "	R4133581	R4133582	R4166923	NR	-	-	-	-
-	1-1/4 "	R4133581	R4133582	R4166923	NR	-	-	-	-
-	1-1/4 "	R4133581	R4133582	R4166923	NR	-	-	-	-
-	1-1/4 "	R4133581	R4133582	R4166923	NR	-	-	-	-
-	1-1/4 "	R4133581	R4133582	R4166923	NR	-	-	-	-
-	1-1/4 "	R4133581	R4133582	R4166923	NR	-	-	-	-
-	1-1/4 "	R4133581	R4133582	R4166923	NR	-	-	-	-
-	1-1/4 "	R4133581	R4133582	R4166923	NR	-	-	-	-
-	1-1/2 "	R4133580	R4133580	Discontinued	NR	-	-	-	-
-	1-1/2 "	R4133580	R4133580	Discontinued	NR	-	-	-	-

MAKE MODEL YEAR AXLE CODE AXLE WEIGHT	AXLE & BRK. TYPE	BRK. MFG.	BRAKE SIZE	FMSI	MERITOR DISC PAD OR BRAKE SHOE	MERITOR GUIDE PIN OR RETURN SPRING KIT	MERITOR CALIPER HWD. KIT OR RETURN SPRING KIT	MERITOR ADJUSTER KIT (LEFT WHEEL)	MERITOR ADJUSTER KIT (RIGHT WHEEL)
ITE(Cont.)									
170, 1700, 1710, 1723, 1724, 1750, 1753, 1754 SERIES CONVENTIONAL CAB, SCHOOL BUS, TILT CAB(Cont.)									
1974 S1723, S1753 School Bus RA25, 184	Ra	WG	15 " x 5 "	1252 - 346	R700346	R40H597	R40H9200	R40H3540	R40H3541
	Rm	WG	15 " x 5 "	1252 - 346	R700346	R40H597	R40H9200	R40H3518	R404148
S1723, S1753 School Bus RA29, 30, 187	Ra	WG	15 " x 5 "	1252 - 346	R700346	R40H597	R40H9200	R40H3540	R40H3541
	Rm	WG	15 " x 5 "	1252 - 346	R700346	R40H597	R40H9200	R40H3518	R404148
S1723, S1753 School Bus RA30, 187	Ra	WG	16 " x 5 "	1254 - 385	N/A	R40H597	R40H9200	NLA	NLA
	Rm	WG	16 " x 5 "	1254 - 385	N/A	R40H597	R40H9200	R404149	R404150
S1723, S1753 School Bus RA30, 39, 44, 186, 189	Ra	WG	15 " x 6 "	4596 - 381	R700381	R40H597	R40H9200	R40H3540	R40H3541
	Rm	WG	15 " x 6 "	4596 - 381	R700381	R40H597	R40H9200	R40H3518	R404148
S1723, S1753 School Bus RA39, 199	Ra	WG	15 " x 7 "	4597 - 383	R700383	R40H597	R40H9200	R40H3540	R40H3541
	Rm	WG	15 " x 7 "	4597 - 383	R700383	R40H597	R40H9200	R40H3518	R404148
S1723, S1753 School Bus RA44, 186	Ra	WG	15 " x 7 "	4597 - 383	R700383	R40H597	R40H9200	NLA	NLA
	Rm	WG	15 " x 7 "	4597 - 383	R700383	R40H597	R40H9200	R40H3518	R404148
S1723, S1753 School Bus RA47, 57	Ra	WG	16 " x 6 "	1255 - 386	N/A	R40H597	R40H9200	NLA	NLA
	Rm	WG	16 " x 6 "	1255 - 386	N/A	R40H597	R40H9200	R404149	R404150
S1724, S1754 Conventional FA109, 208	Fa	WG	15 " x 3 "	1245C - 321	R700321	R40H521	R40H9237	R40H3502	R40H3503
	Fm	WG	15 " x 3 "	1245A - 235	R700235	R40H521	R40H9201	R40H3524	R40H3524
S1724, S1754 Conventional FA118, 127, 139	Fa	WG	15 " x 5 "	1345A - 491	N/A	R40H521	R40H9237	R40H3502	R40H3503
	Fm	WG	15 " x 5 "	1345 - 490	N/A	R40H521	R40H9201	R40H3524	R40H3524
S1724, S1754 Conventional FA208	Fa	WG	15 " x 3-1/2 "	1280B - 322	R464004	R40H521	R40H9237	R40H3502	R40H3503
	Fm	WG	15 " x 3-1/2 "	1280 - 463	R700463	R40H521	R40H9201	R40H3524	R40H3524
S1724, S1754 Conventional FA48, 68, 70, 72	Fa	WG	14 " x 2-1/2 "	1294A - 325	N/A	R40H521	R40H9237	R40H3502	R40H3503
	Fm	WG	14 " x 2-1/2 "	1294 - 296	N/A	R40H521	R40H9201	R40H3524	R40H3524
S1724, S1754 Conventional FA71, 73, 101	Fa	WG	15 " x 3 "	1245C - 321	R700321	R40H521	R40H9237	R40H3502	R40H3503
	Fa	WG	15 " x 3-1/2 "	1280B - 322	R464004	R40H521	R40H9237	R40H3502	R40H3503
	Fm	WG	15 " x 3 "	1245A - 235	R700235	R40H521	R40H9201	R40H3524	R40H3524
	Fm	WG	15 " x 3-1/2 "	1280 - 463	R700463	R40H521	R40H9201	R40H3524	R40H3524
S1724, S1754 Conventional FA74	Fa	WG	15 " x 3 "	1245C - 321	R700321	R40H521	R40H9237	R40H3502	R40H3503
	Fm	WG	15 " x 3 "	1245A - 235	R700235	R40H521	R40H9201	R40H3524	R40H3524
S1724, S1754 Conventional FA78, 81	Fa	WG	15 " x 3 "	1245C - 321	R700321	R40H521	R40H9237	R40H3502	R40H3503
S1724, S1754 Conventional FA89, 91, 98	Fa	WG	15 " x 3 "	1245C - 321	R700321	R40H521	R40H9237	R40H3502	R40H3503
	Fm	WG	15 " x 3 "	1245A - 235	R700235	R40H521	R40H9201	R40H3524	R40H3524
S1724, S1754 Conventional RA184	Ra	WG	15 " x 4 "	4645A - 376	Discontinued	R40H597	R40H9200	R40H3540	R40H3541
	Rm	WG	15 " x 4 "	4645A - 376	Discontinued	R40H597	R40H9200	R40H3518	R404148
S1724, S1754 Conventional RA25, 184	Ra	WG	15 " x 5 "	1252 - 346	R700346	R40H597	R40H9200	R40H3540	R40H3541
	Rm	WG	15 " x 5 "	1252 - 346	R700346	R40H597	R40H9200	R40H3518	R404148
S1724, S1754 Conventional RA29, 30, 187	Ra	WG	15 " x 5 "	1252 - 346	R700346	R40H597	R40H9200	R40H3540	R40H3541
	Rm	WG	15 " x 5 "	1252 - 346	R700346	R40H597	R40H9200	R40H3518	R404148
S1724, S1754 Conventional RA30, 187	Ra	WG	16 " x 5 "	1254 - 385	N/A	R40H597	R40H9200	NLA	NLA
	Rm	WG	16 " x 5 "	1254 - 385	N/A	R40H597	R40H9200	R404149	R404150
S1724, S1754 Conventional RA30, 39, 44, 186, 189	Ra	WG	15 " x 6 "	4596 - 381	R700381	R40H597	R40H9200	R40H3540	R40H3541
	Rm	WG	15 " x 6 "	4596 - 381	R700381	R40H597	R40H9200	R40H3518	R404148

MERITOR DRUM OR ROTOR NO.	CALIPER OR CYLINDER BORE SIZE	MERITOR CALIPER OR WHEEL CYLINDER (LEFT)	MERITOR CALIPER OR WHEEL CYLINDER (RIGHT)	MERITOR CALIPER OR WHEEL CYLINDER REPAIR KIT	MERITOR CALIPER PISTON	MERITOR MASTER CYLINDER	MERITOR MASTER CYLINDER KIT	MERITOR BRAKE HOSE (LEFT)	MERITOR BRAKE HOSE (RIGHT)
ITE(Cont.)									
170, 1700, 1710, 1723, 1724, 1750, 1753, 1754 SERIES CONVENTIONAL CAB, SCHOOL BUS, TILT CAB(Cont.)									
-	1-1/2 "	R4133580	R4133580	Discontinued	NR	-	-	-	-
-	1-1/2 "	R4133580	R4133580	Discontinued	NR	-	-	-	-
-	1-1/2 "	R4133580	R4133580	Discontinued	NR	-	-	-	-
-	1-1/2 "	R4133580	R4133580	Discontinued	NR	-	-	-	-
-	1-5/8 "	R4133338	R4133338	R4166689	NR	-	-	-	-
-	1-5/8 "	R4133338	R4133338	R4166689	NR	-	-	-	-
-	1-5/8 "	R4133338	R4133338	R4166689	NR	-	-	-	-
-	1-5/8 "	R4133338	R4133338	R4166689	NR	-	-	-	-
-	1-5/8 "	R4133338	R4133338	R4166689	NR	-	-	-	-
-	1-5/8 "	R4133338	R4133338	R4166689	NR	-	-	-	-
-	1-5/8 "	R4133338	R4133338	R4166689	NR	-	-	-	-
-	1-5/8 "	R4133338	R4133338	R4166689	NR	-	-	-	-
-	1-3/4 "	R4133400	R4133400	R4166917	NR	-	-	-	-
-	1-3/4 "	R4133400	R4133400	R4166917	NR	-	-	-	-
-	1-1/4 "	R4133581	R4133582	R4166923	NR	-	-	-	-
-	1-1/4 "	R4133581	R4133582	R4166923	NR	-	-	-	-
-		-	-	-	-	-	-	-	-
-		-	-	-	-	-	-	-	-
-	1-1/4 "	R4133581	R4133582	R4166923	NR	-	-	-	-
-	1-1/4 "	R4133581	R4133582	R4166923	NR	-	-	-	-
-	1-1/8 "	R4133714	R4133715	R4166926	NR	-	-	-	-
-	1-1/8 "	R4133714	R4133715	R4166926	NR	-	-	-	-
-	1-1/4 "	R4133581	R4133582	R4166923	NR	-	-	-	-
-	1-1/4 "	R4133581	R4133582	R4166923	NR	-	-	-	-
-	1-1/4 "	R4133581	R4133582	R4166923	NR	-	-	-	-
-	1-1/4 "	R4133581	R4133582	R4166923	NR	-	-	-	-
-	1-1/4 "	R4133581	R4133582	R4166923	NR	-	-	-	-
-	1-1/4 "	R4133581	R4133582	R4166923	NR	-	-	-	-
-	1-1/4 "	R4133581	R4133582	R4166923	NR	-	-	-	-
-	1-1/4 "	R4133581	R4133582	R4166923	NR	-	-	-	-
-	1-1/4 "	R4133581	R4133582	R4166923	NR	-	-	-	-
-	1-1/4 "	R4133581	R4133582	R4166923	NR	-	-	-	-
-	1-1/2 "	R4133580	R4133580	Discontinued	NR	-	-	-	-
-	1-1/2 "	R4133580	R4133580	Discontinued	NR	-	-	-	-
-	1-1/2 "	R4133580	R4133580	Discontinued	NR	-	-	-	-
-	1-1/2 "	R4133580	R4133580	Discontinued	NR	-	-	-	-
-	1-1/2 "	R4133580	R4133580	Discontinued	NR	-	-	-	-
-	1-1/2 "	R4133580	R4133580	Discontinued	NR	-	-	-	-
-	1-5/8 "	R4133338	R4133338	R4166689	NR	-	-	-	-
-	1-5/8 "	R4133338	R4133338	R4166689	NR	-	-	-	-
-	1-5/8 "	R4133338	R4133338	R4166689	NR	-	-	-	-
-	1-5/8 "	R4133338	R4133338	R4166689	NR	-	-	-	-

MAKE MODEL YEAR AXLE CODE AXLE WEIGHT	AXLE & BRK. TYPE	BRK. MFG.	BRAKE SIZE	FMSI	MERITOR DISC PAD OR BRAKE SHOE	MERITOR GUIDE PIN OR RETURN SPRING KIT	MERITOR CALIPER HWD. KIT OR RETURN SPRING KIT	MERITOR ADJUSTER KIT (LEFT WHEEL)	MERITOR ADJUSTER KIT (RIGHT WHEEL)
ITE(Cont.)									
170, 1700, 1710, 1723, 1724, 1750, 1753, 1754 SERIES CONVENTIONAL CAB, SCHOOL BUS, TILT CAB(Cont.)									
1974 S1724, S1754 Conventional RA39, 199	Ra	WG	15 " x 7 "	4597 - 383	R700383	R40H597	R40H9200	R40H3540	R40H3541
	Rm	WG	15 " x 7 "	4597 - 383	R700383	R40H597	R40H9200	R40H3518	R404148
S1724, S1754 Conventional RA44, 186	Ra	WG	15 " x 7 "	4597 - 383	R700383	R40H597	R40H9200	NLA	NLA
	Rm	WG	15 " x 7 "	4597 - 383	R700383	R40H597	R40H9200	R40H3518	R404148
S1724, S1754 Conventional RA47, 57	Ra	WG	16 " x 6 "	1255 - 386	N/A	R40H597	R40H9200	NLA	NLA
	Rm	WG	16 " x 6 "	1255 - 386	N/A	R40H597	R40H9200	R404149	R404150
1973 C1710, C1750 Cargostar Tilt Cab FA109, 208	Fa	WG	15 " x 3 "	1245C - 321	R700321	R40H521	R40H9237	R40H3502	R40H3503
	Fm	WG	15 " x 3 "	1245A - 235	R700235	R40H521	R40H9201	R40H3524	R40H3524
C1710, C1750 Cargostar Tilt Cab FA118, 127, 139	Fa	WG	15 " x 5 "	1345A - 491	N/A	R40H521	R40H9237	R40H3502	R40H3503
	Fm	WG	15 " x 5 "	1345 - 490	N/A	R40H521	R40H9201	R40H3524	R40H3524
C1710, C1750 Cargostar Tilt Cab FA208	Fa	WG	15 " x 3-1/2 "	1280B - 322	R464004	R40H521	R40H9237	R40H3502	R40H3503
	Fm	WG	15 " x 3-1/2 "	1280 - 463	R700463	R40H521	R40H9201	R40H3524	R40H3524
C1710, C1750 Cargostar Tilt Cab FA48, 68, 70, 72	Fa	WG	14 " x 2-1/2 "	1294A - 325	N/A	R40H521	R40H9237	R40H3502	R40H3503
	Fm	WG	14 " x 2-1/2 "	1294 - 296	N/A	R40H521	R40H9201	R40H3524	R40H3524
C1710, C1750 Cargostar Tilt Cab FA71, 73, 101	Fa	WG	15 " x 3 "	1245C - 321	R700321	R40H521	R40H9237	R40H3502	R40H3503
	Fa	WG	15 " x 3-1/2 "	1280B - 322	R464004	R40H521	R40H9237	R40H3502	R40H3503
	Fm	WG	15 " x 3 "	1245A - 235	R700235	R40H521	R40H9201	R40H3524	R40H3524
	Fm	WG	15 " x 3-1/2 "	1280 - 463	R700463	R40H521	R40H9201	R40H3524	R40H3524
C1710, C1750 Cargostar Tilt Cab FA74	Fa	WG	15 " x 3 "	1245C - 321	R700321	R40H521	R40H9237	R40H3502	R40H3503
	Fm	WG	15 " x 3 "	1245A - 235	R700235	R40H521	R40H9201	R40H3524	R40H3524
C1710, C1750 Cargostar Tilt Cab FA78, 81	Fa	WG	15 " x 3 "	1245C - 321	R700321	R40H521	R40H9237	R40H3502	R40H3503
C1710, C1750 Cargostar Tilt Cab FA89, 91, 98	Fa	WG	15 " x 3 "	1245C - 321	R700321	R40H521	R40H9237	R40H3502	R40H3503
	Fm	WG	15 " x 3 "	1245A - 235	R700235	R40H521	R40H9201	R40H3524	R40H3524
C1710, C1750 Cargostar Tilt Cab RA184	Ra	WG	15 " x 4 "	4645A - 376	Discontinued	R40H597	R40H9200	R40H3540	R40H3541
	Rm	WG	15 " x 4 "	4645A - 376	Discontinued	R40H597	R40H9200	R40H3518	R404148
C1710, C1750 Cargostar Tilt Cab RA25, 184	Ra	WG	15 " x 5 "	1252 - 346	R700346	R40H597	R40H9200	R40H3540	R40H3541
	Rm	WG	15 " x 5 "	1252 - 346	R700346	R40H597	R40H9200	R40H3518	R404148
C1710, C1750 Cargostar Tilt Cab RA29, 30, 187	Ra	WG	15 " x 5 "	1252 - 346	R700346	R40H597	R40H9200	R40H3540	R40H3541
	Rm	WG	15 " x 5 "	1252 - 346	R700346	R40H597	R40H9200	R40H3518	R404148
C1710, C1750 Cargostar Tilt Cab RA30, 187	Ra	WG	16 " x 5 "	1254 - 385	N/A	R40H597	R40H9200	NLA	NLA
	Rm	WG	16 " x 5 "	1254 - 385	N/A	R40H597	R40H9200	R404149	R404150
C1710, C1750 Cargostar Tilt Cab RA30, 39, 44, 186, 189	Ra	WG	15 " x 6 "	4596 - 381	R700381	R40H597	R40H9200	R40H3540	R40H3541

MERITOR DRUM OR ROTOR NO.	CALIPER OR CYLINDER BORE SIZE	MERITOR CALIPER OR WHEEL CYLINDER (LEFT)	MERITOR CALIPER OR WHEEL CYLINDER (RIGHT)	MERITOR CALIPER OR WHEEL CYLINDER REPAIR KIT	MERITOR CALIPER PISTON	MERITOR MASTER CYLINDER	MERITOR MASTER CYLINDER KIT	MERITOR BRAKE HOSE (LEFT)	MERITOR BRAKE HOSE (RIGHT)
									ITE(Cont.)
170, 1700, 1710, 1723, 1724, 1750, 1753, 1754 SERIES CONVENTIONAL CAB, SCHOOL BUS, TILT CAB(Cont.)									
-	1-5/8 "	R4133338	R4133338	R4166689	NR	-	-	-	-
-	1-5/8 "	R4133338	R4133338	R4166689	NR	-	-	-	-
-	1-5/8 "	R4133338	R4133338	R4166689	NR	-	-	-	-
-	1-5/8 "	R4133338	R4133338	R4166689	NR	-	-	-	-
-	1-3/4 "	R4133400	R4133400	R4166917	NR	-	-	-	-
-	1-3/4 "	R4133400	R4133400	R4166917	NR	-	-	-	-
-	1-1/4 "	R4133581	R4133582	R4166923	NR	-	-	-	-
-	1-1/4 "	R4133581	R4133582	R4166923	NR	-	-	-	-
-		-	-	-	-	-	-	-	-
-		-	-	-	-	-	-	-	-
-	1-1/4 "	R4133581	R4133582	R4166923	NR	-	-	-	-
-	1-1/4 "	R4133581	R4133582	R4166923	NR	-	-	-	-
-	1-1/8 "	R4133714	R4133715	R4166926	NR	-	-	-	-
-	1-1/8 "	R4133714	R4133715	R4166926	NR	-	-	-	-
-	1-1/4 "	R4133581	R4133582	R4166923	NR	-	-	-	-
-	1-1/4 "	R4133581	R4133582	R4166923	NR	-	-	-	-
-	1-1/4 "	R4133581	R4133582	R4166923	NR	-	-	-	-
-	1-1/4 "	R4133581	R4133582	R4166923	NR	-	-	-	-
-	1-1/4 "	R4133581	R4133582	R4166923	NR	-	-	-	-
-	1-1/4 "	R4133581	R4133582	R4166923	NR	-	-	-	-
-	1-1/4 "	R4133581	R4133582	R4166923	NR	-	-	-	-
-	1-1/4 "	R4133581	R4133582	R4166923	NR	-	-	-	-
-	1-1/4 "	R4133581	R4133582	R4166923	NR	-	-	-	-
-	1-1/2 "	R4133580	R4133580	Discontinued	NR	-	-	-	-
-	1-1/2 "	R4133580	R4133580	Discontinued	NR	-	-	-	-
-	1-1/2 "	R4133580	R4133580	Discontinued	NR	-	-	-	-
-	1-1/2 "	R4133580	R4133580	Discontinued	NR	-	-	-	-
-	1-1/2 "	R4133580	R4133580	Discontinued	NR	-	-	-	-
-	1-1/2 "	R4133580	R4133580	Discontinued	NR	-	-	-	-
-	1-5/8 "	R4133338	R4133338	R4166689	NR	-	-	-	-
-	1-5/8 "	R4133338	R4133338	R4166689	NR	-	-	-	-
-	1-5/8 "	R4133338	R4133338	R4166689	NR	-	-	-	-

MAKE MODEL YEAR AXLE CODE AXLE WEIGHT	AXLE & BRK. TYPE	BRK. MFG.	BRAKE SIZE	FMSI	MERITOR DISC PAD OR BRAKE SHOE	MERITOR GUIDE PIN OR RETURN SPRING KIT	MERITOR CALIPER HWD. KIT OR RETURN SPRING KIT	MERITOR ADJUSTER KIT (LEFT WHEEL)	MERITOR ADJUSTER KIT (RIGHT WHEEL)
ITE(Cont.)									
170, 1700, 1710, 1723, 1724, 1750, 1753, 1754 SERIES CONVENTIONAL CAB, SCHOOL BUS, TILT CAB(Cont.)									
1973	Rm	WG	15 " x 6 "	4596 - 381	R700381	R40H597	R40H9200	R40H3518	R404148
C1710, C1750 Cargostar Tilt Cab RA39, 199	Ra	WG	15 " x 7 "	4597 - 383	R700383	R40H597	R40H9200	R40H3540	R40H3541
	Rm	WG	15 " x 7 "	4597 - 383	R700383	R40H597	R40H9200	R40H3518	R404148
C1710, C1750 Cargostar Tilt Cab RA44, 186	Ra	WG	15 " x 7 "	4597 - 383	R700383	R40H597	R40H9200	NLA	NLA
	Rm	WG	15 " x 7 "	4597 - 383	R700383	R40H597	R40H9200	R40H3518	R404148
C1710, C1750 Cargostar Tilt Cab RA47, 57	Ra	WG	16 " x 6 "	1255 - 386	N/A	R40H597	R40H9200	NLA	NLA
	Rm	WG	16 " x 6 "	1255 - 386	N/A	R40H597	R40H9200	R404149	R404150
S1723, S1753 School Bus FA109, 208	Fa	WG	15 " x 3 "	1245C - 321	R700321	R40H521	R40H9237	R40H3502	R40H3503
	Fm	WG	15 " x 3 "	1245A - 235	R700235	R40H521	R40H9201	R40H3524	R40H3524
S1723, S1753 School Bus FA118, 127, 139	Fa	WG	15 " x 5 "	1345A - 491	N/A	R40H521	R40H9237	R40H3502	R40H3503
	Fm	WG	15 " x 5 "	1345 - 490	N/A	R40H521	R40H9201	R40H3524	R40H3524
S1723, S1753 School Bus FA208	Fa	WG	15 " x 3-1/2 "	1280B - 322	R464004	R40H521	R40H9237	R40H3502	R40H3503
	Fm	WG	15 " x 3-1/2 "	1280 - 463	R700463	R40H521	R40H9201	R40H3524	R40H3524
S1723, S1753 School Bus FA48, 68, 70, 72	Fa	WG	14 " x 2-1/2 "	1294A - 325	N/A	R40H521	R40H9237	R40H3502	R40H3503
	Fm	WG	14 " x 2-1/2 "	1294 - 296	N/A	R40H521	R40H9201	R40H3524	R40H3524
S1723, S1753 School Bus FA71, 73, 101	Fa	WG	15 " x 3 "	1245C - 321	R700321	R40H521	R40H9237	R40H3502	R40H3503
	Fa	WG	15 " x 3-1/2 "	1280B - 322	R464004	R40H521	R40H9237	R40H3502	R40H3503
	Fm	WG	15 " x 3 "	1245A - 235	R700235	R40H521	R40H9201	R40H3524	R40H3524
	Fm	WG	15 " x 3-1/2 "	1280 - 463	R700463	R40H521	R40H9201	R40H3524	R40H3524
S1723, S1753 School Bus FA74	Fa	WG	15 " x 3 "	1245C - 321	R700321	R40H521	R40H9237	R40H3502	R40H3503
	Fm	WG	15 " x 3 "	1245A - 235	R700235	R40H521	R40H9201	R40H3524	R40H3524
S1723, S1753 School Bus FA78, 81	Fa	WG	15 " x 3 "	1245C - 321	R700321	R40H521	R40H9237	R40H3502	R40H3503
S1723, S1753 School Bus FA89, 91, 98	Fa	WG	15 " x 3 "	1245C - 321	R700321	R40H521	R40H9237	R40H3502	R40H3503
	Fm	WG	15 " x 3 "	1245A - 235	R700235	R40H521	R40H9201	R40H3524	R40H3524
S1723, S1753 School Bus RA184	Ra	WG	15 " x 4 "	4645A - 376	Discontinued	R40H597	R40H9200	R40H3540	R40H3541
	Rm	WG	15 " x 4 "	4645A - 376	Discontinued	R40H597	R40H9200	R40H3518	R404148
S1723, S1753 School Bus RA25, 184	Ra	WG	15 " x 5 "	1252 - 346	R700346	R40H597	R40H9200	R40H3540	R40H3541
	Rm	WG	15 " x 5 "	1252 - 346	R700346	R40H597	R40H9200	R40H3518	R404148
S1723, S1753 School Bus RA29, 30, 187	Ra	WG	15 " x 5 "	1252 - 346	R700346	R40H597	R40H9200	R40H3540	R40H3541
	Rm	WG	15 " x 5 "	1252 - 346	R700346	R40H597	R40H9200	R40H3518	R404148
S1723, S1753 School Bus RA30, 187	Ra	WG	16 " x 5 "	1254 - 385	N/A	R40H597	R40H9200	NLA	NLA
	Rm	WG	16 " x 5 "	1254 - 385	N/A	R40H597	R40H9200	R404149	R404150
S1723, S1753 School Bus RA30, 39, 44, 186, 189	Ra	WG	15 " x 6 "	4596 - 381	R700381	R40H597	R40H9200	R40H3540	R40H3541
	Rm	WG	15 " x 6 "	4596 - 381	R700381	R40H597	R40H9200	R40H3518	R404148
S1723, S1753 School Bus RA39, 199	Ra	WG	15 " x 7 "	4597 - 383	R700383	R40H597	R40H9200	R40H3540	R40H3541
	Rm	WG	15 " x 7 "	4597 - 383	R700383	R40H597	R40H9200	R40H3518	R404148
S1723, S1753 School Bus RA44, 186	Ra	WG	15 " x 7 "	4597 - 383	R700383	R40H597	R40H9200	NLA	NLA
	Rm	WG	15 " x 7 "	4597 - 383	R700383	R40H597	R40H9200	R40H3518	R404148
S1723, S1753 School Bus RA47, 57	Ra	WG	16 " x 6 "	1255 - 386	N/A	R40H597	R40H9200	NLA	NLA

MERITOR DRUM OR ROTOR NO.	CALIPER OR CYLINDER BORE SIZE	MERITOR CALIPER OR WHEEL CYLINDER (LEFT)	MERITOR CALIPER OR WHEEL CYLINDER (RIGHT)	MERITOR CALIPER OR WHEEL CYLINDER REPAIR KIT	MERITOR CALIPER PISTON	MERITOR MASTER CYLINDER	MERITOR MASTER CYLINDER KIT	MERITOR BRAKE HOSE (LEFT)	MERITOR BRAKE HOSE (RIGHT)
									ITE(Cont.)
170, 1700, 1710, 1723, 1724, 1750, 1753, 1754 SERIES CONVENTIONAL CAB, SCHOOL BUS, TILT CAB(Cont.)									
-	1-5/8 "	R4133338	R4133338	R4166689	NR	-	-	-	-
-	1-5/8 "	R4133338	R4133338	R4166689	NR	-	-	-	-
-	1-5/8 "	R4133338	R4133338	R4166689	NR	-	-	-	-
-	1-5/8 "	R4133338	R4133338	R4166689	NR	-	-	-	-
-	1-5/8 "	R4133338	R4133338	R4166689	NR	-	-	-	-
-	1-3/4 "	R4133400	R4133400	R4166917	NR	-	-	-	-
-	1-3/4 "	R4133400	R4133400	R4166917	NR	-	-	-	-
-	1-1/4 "	R4133581	R4133582	R4166923	NR	-	-	-	-
-	1-1/4 "	R4133581	R4133582	R4166923	NR	-	-	-	-
-		-	-	-	-	-	-	-	-
-		-	-	-	-	-	-	-	-
-	1-1/4 "	R4133581	R4133582	R4166923	NR	-	-	-	-
-	1-1/4 "	R4133581	R4133582	R4166923	NR	-	-	-	-
-	1-1/8 "	R4133714	R4133715	R4166926	NR	-	-	-	-
-	1-1/8 "	R4133714	R4133715	R4166926	NR	-	-	-	-
-	1-1/4 "	R4133581	R4133582	R4166923	NR	-	-	-	-
-	1-1/4 "	R4133581	R4133582	R4166923	NR	-	-	-	-
-	1-1/4 "	R4133581	R4133582	R4166923	NR	-	-	-	-
-	1-1/4 "	R4133581	R4133582	R4166923	NR	-	-	-	-
-	1-1/4 "	R4133581	R4133582	R4166923	NR	-	-	-	-
-	1-1/4 "	R4133581	R4133582	R4166923	NR	-	-	-	-
-	1-1/4 "	R4133581	R4133582	R4166923	NR	-	-	-	-
-	1-1/4 "	R4133581	R4133582	R4166923	NR	-	-	-	-
-	1-1/2 "	R4133580	R4133580	Discontinued	NR	-	-	-	-
-	1-1/2 "	R4133580	R4133580	Discontinued	NR	-	-	-	-
-	1-1/2 "	R4133580	R4133580	Discontinued	NR	-	-	-	-
-	1-1/2 "	R4133580	R4133580	Discontinued	NR	-	-	-	-
-	1-1/2 "	R4133580	R4133580	Discontinued	NR	-	-	-	-
-	1-1/2 "	R4133580	R4133580	Discontinued	NR	-	-	-	-
-	1-5/8 "	R4133338	R4133338	R4166689	NR	-	-	-	-
-	1-5/8 "	R4133338	R4133338	R4166689	NR	-	-	-	-
-	1-5/8 "	R4133338	R4133338	R4166689	NR	-	-	-	-
-	1-5/8 "	R4133338	R4133338	R4166689	NR	-	-	-	-
-	1-5/8 "	R4133338	R4133338	R4166689	NR	-	-	-	-
-	1-5/8 "	R4133338	R4133338	R4166689	NR	-	-	-	-
-	1-5/8 "	R4133338	R4133338	R4166689	NR	-	-	-	-
-	1-3/4 "	R4133400	R4133400	R4166917	NR	-	-	-	-

MAKE MODEL YEAR AXLE CODE AXLE WEIGHT	AXLE & BRK. TYPE	BRK. MFG.	BRAKE SIZE	FMSI	MERITOR DISC PAD OR BRAKE SHOE	MERITOR GUIDE PIN OR RETURN SPRING KIT	MERITOR CALIPER HWD. KIT OR RETURN SPRING KIT	MERITOR ADJUSTER KIT (LEFT WHEEL)	MERITOR ADJUSTER KIT (RIGHT WHEEL)
ITE(Cont.)									
170, 1700, 1710, 1723, 1724, 1750, 1753, 1754 SERIES CONVENTIONAL CAB, SCHOOL BUS, TILT CAB(Cont.)									
1973									
	Rm	WG	16 " x 6 "	1255 - 386	N/A	R40H597	R40H9200	R404149	R404150
S1724, S1754 Conventional									
FA109, 208	Fa	WG	15 " x 3 "	1245C - 321	R700321	R40H521	R40H9237	R40H3502	R40H3503
	Fm	WG	15 " x 3 "	1245A - 235	R700235	R40H521	R40H9201	R40H3524	R40H3524
S1724, S1754 Conventional									
FA118, 127, 139	Fa	WG	15 " x 5 "	1345A - 491	N/A	R40H521	R40H9237	R40H3502	R40H3503
	Fm	WG	15 " x 5 "	1345 - 490	N/A	R40H521	R40H9201	R40H3524	R40H3524
S1724, S1754 Conventional									
FA208	Fa	WG	15 " x 3-1/2 "	1280B - 322	R464004	R40H521	R40H9237	R40H3502	R40H3503
	Fm	WG	15 " x 3-1/2 "	1280 - 463	R700463	R40H521	R40H9201	R40H3524	R40H3524
S1724, S1754 Conventional									
FA48, 68, 70, 72	Fa	WG	14 " x 2-1/2 "	1294A - 325	N/A	R40H521	R40H9237	R40H3502	R40H3503
	Fm	WG	14 " x 2-1/2 "	1294 - 296	N/A	R40H521	R40H9201	R40H3524	R40H3524
S1724, S1754 Conventional									
FA71, 73, 101	Fa	WG	15 " x 3 "	1245C - 321	R700321	R40H521	R40H9237	R40H3502	R40H3503
	Fa	WG	15 " x 3-1/2 "	1280B - 322	R464004	R40H521	R40H9237	R40H3502	R40H3503
	Fm	WG	15 " x 3 "	1245A - 235	R700235	R40H521	R40H9201	R40H3524	R40H3524
	Fm	WG	15 " x 3-1/2 "	1280 - 463	R700463	R40H521	R40H9201	R40H3524	R40H3524
S1724, S1754 Conventional									
FA74	Fa	WG	15 " x 3 "	1245C - 321	R700321	R40H521	R40H9237	R40H3502	R40H3503
	Fm	WG	15 " x 3 "	1245A - 235	R700235	R40H521	R40H9201	R40H3524	R40H3524
S1724, S1754 Conventional									
FA78, 81	Fa	WG	15 " x 3 "	1245C - 321	R700321	R40H521	R40H9237	R40H3502	R40H3503
S1724, S1754 Conventional									
FA89, 91, 98	Fa	WG	15 " x 3 "	1245C - 321	R700321	R40H521	R40H9237	R40H3502	R40H3503
	Fm	WG	15 " x 3 "	1245A - 235	R700235	R40H521	R40H9201	R40H3524	R40H3524
S1724, S1754 Conventional									
RA184	Ra	WG	15 " x 4 "	4645A - 376	Discontinued	R40H597	R40H9200	R40H3540	R40H3541
	Rm	WG	15 " x 4 "	4645A - 376	Discontinued	R40H597	R40H9200	R40H3518	R404148
S1724, S1754 Conventional									
RA25, 184	Ra	WG	15 " x 5 "	1252 - 346	R700346	R40H597	R40H9200	R40H3540	R40H3541
	Rm	WG	15 " x 5 "	1252 - 346	R700346	R40H597	R40H9200	R40H3518	R404148
S1724, S1754 Conventional									
RA29, 30, 187	Ra	WG	15 " x 5 "	1252 - 346	R700346	R40H597	R40H9200	R40H3540	R40H3541
	Rm	WG	15 " x 5 "	1252 - 346	R700346	R40H597	R40H9200	R40H3518	R404148
S1724, S1754 Conventional									
RA30, 187	Ra	WG	16 " x 5 "	1254 - 385	N/A	R40H597	R40H9200	NLA	NLA
	Rm	WG	16 " x 5 "	1254 - 385	N/A	R40H597	R40H9200	R404149	R404150
S1724, S1754 Conventional									
RA30, 39, 44, 186, 189	Ra	WG	15 " x 6 "	4596 - 381	R700381	R40H597	R40H9200	R40H3540	R40H3541
	Rm	WG	15 " x 6 "	4596 - 381	R700381	R40H597	R40H9200	R40H3518	R404148
S1724, S1754 Conventional									
RA39, 199	Ra	WG	15 " x 7 "	4597 - 383	R700383	R40H597	R40H9200	R40H3540	R40H3541
	Rm	WG	15 " x 7 "	4597 - 383	R700383	R40H597	R40H9200	R40H3518	R404148
S1724, S1754 Conventional									
RA44, 186	Ra	WG	15 " x 7 "	4597 - 383	R700383	R40H597	R40H9200	NLA	NLA
	Rm	WG	15 " x 7 "	4597 - 383	R700383	R40H597	R40H9200	R40H3518	R404148
S1724, S1754 Conventional									
RA47, 57	Ra	WG	16 " x 6 "	1255 - 386	N/A	R40H597	R40H9200	NLA	NLA
	Rm	WG	16 " x 6 "	1255 - 386	N/A	R40H597	R40H9200	R404149	R404150
1972 C1710, C1750 Cargostar Tilt Cab									
FA109, 208	Fa	WG	15 " x 3 "	1245C - 321	R700321	R40H521	R40H9237	R40H3502	R40H3503
	Fm	WG	15 " x 3 "	1245A - 235	R700235	R40H521	R40H9201	R40H3524	R40H3524
C1710, C1750 Cargostar Tilt Cab									
FA118, 127, 139	Fa	WG	15 " x 5 "	1345A - 491	N/A	R40H521	R40H9237	R40H3502	R40H3503
	Fm	WG	15 " x 5 "	1345 - 490	N/A	R40H521	R40H9201	R40H3524	R40H3524
C1710, C1750 Cargostar Tilt Cab									
FA208	Fa	WG	15 " x 3-1/2 "	1280B - 322	R464004	R40H521	R40H9237	R40H3502	R40H3503

MERITOR DRUM OR ROTOR NO.	CALIPER OR CYLINDER BORE SIZE	MERITOR CALIPER OR WHEEL CYLINDER (LEFT)	MERITOR CALIPER OR WHEEL CYLINDER (RIGHT)	MERITOR CALIPER OR WHEEL CYLINDER REPAIR KIT	MERITOR CALIPER PISTON	MERITOR MASTER CYLINDER	MERITOR MASTER CYLINDER KIT	MERITOR BRAKE HOSE (LEFT)	MERITOR BRAKE HOSE (RIGHT)
									ITE(Cont.)
170, 1700, 1710, 1723, 1724, 1750, 1753, 1754 SERIES CONVENTIONAL CAB, SCHOOL BUS, TILT CAB(Cont.)									
-	1-3/4 "	R4133400	R4133400	R4166917	NR	-	-	-	-
-	1-1/4 "	R4133581	R4133582	R4166923	NR	-	-	-	-
-	1-1/4 "	R4133581	R4133582	R4166923	NR	-	-	-	-
-		-	-	-	-	-	-	-	-
-		-	-	-	-	-	-	-	-
-	1-1/4 "	R4133581	R4133582	R4166923	NR	-	-	-	-
-	1-1/4 "	R4133581	R4133582	R4166923	NR	-	-	-	-
-	1-1/8 "	R4133714	R4133715	R4166926	NR	-	-	-	-
-	1-1/8 "	R4133714	R4133715	R4166926	NR	-	-	-	-
-	1-1/4 "	R4133581	R4133582	R4166923	NR	-	-	-	-
-	1-1/4 "	R4133581	R4133582	R4166923	NR	-	-	-	-
-	1-1/4 "	R4133581	R4133582	R4166923	NR	-	-	-	-
-	1-1/4 "	R4133581	R4133582	R4166923	NR	-	-	-	-
-	1-1/4 "	R4133581	R4133582	R4166923	NR	-	-	-	-
-	1-1/4 "	R4133581	R4133582	R4166923	NR	-	-	-	-
-	1-1/4 "	R4133581	R4133582	R4166923	NR	-	-	-	-
-	1-1/4 "	R4133581	R4133582	R4166923	NR	-	-	-	-
-	1-1/4 "	R4133581	R4133582	R4166923	NR	-	-	-	-
-	1-1/2 "	R4133580	R4133580	Discontinued	NR	-	-	-	-
-	1-1/2 "	R4133580	R4133580	Discontinued	NR	-	-	-	-
-	1-1/2 "	R4133580	R4133580	Discontinued	NR	-	-	-	-
-	1-1/2 "	R4133580	R4133580	Discontinued	NR	-	-	-	-
-	1-1/2 "	R4133580	R4133580	Discontinued	NR	-	-	-	-
-	1-1/2 "	R4133580	R4133580	Discontinued	NR	-	-	-	-
-	1-5/8 "	R4133338	R4133338	R4166689	NR	-	-	-	-
-	1-5/8 "	R4133338	R4133338	R4166689	NR	-	-	-	-
-	1-5/8 "	R4133338	R4133338	R4166689	NR	-	-	-	-
-	1-5/8 "	R4133338	R4133338	R4166689	NR	-	-	-	-
-	1-5/8 "	R4133338	R4133338	R4166689	NR	-	-	-	-
-	1-5/8 "	R4133338	R4133338	R4166689	NR	-	-	-	-
-	1-5/8 "	R4133338	R4133338	R4166689	NR	-	-	-	-
-	1-5/8 "	R4133338	R4133338	R4166689	NR	-	-	-	-
-	1-3/4 "	R4133400	R4133400	R4166917	NR	-	-	-	-
-	1-3/4 "	R4133400	R4133400	R4166917	NR	-	-	-	-
-	1-1/4 "	R4133581	R4133582	R4166923	NR	-	-	-	-
-	1-1/4 "	R4133581	R4133582	R4166923	NR	-	-	-	-
-		-	-	-	-	-	-	-	-
-		-	-	-	-	-	-	-	-
-	1-1/4 "	R4133581	R4133582	R4166923	NR	-	-	-	-

MAKE MODEL YEAR AXLE CODE AXLE WEIGHT	AXLE & BRK. TYPE	BRK. MFG.	BRAKE SIZE	FMSI	MERITOR DISC PAD OR BRAKE SHOE	MERITOR GUIDE PIN OR RETURN SPRING KIT	MERITOR CALIPER HWD. KIT OR RETURN SPRING KIT	MERITOR ADJUSTER KIT (LEFT WHEEL)	MERITOR ADJUSTER KIT (RIGHT WHEEL)
ITE(Cont.)									
170, 1700, 1710, 1723, 1724, 1750, 1753, 1754 SERIES CONVENTIONAL CAB, SCHOOL BUS, TILT CAB(Cont.)									
1972	Fm	WG	15 " x 3-1/2 "	1280 - 463	R700463	R40H521	R40H9201	R40H3524	R40H3524
C1710, C1750 Cargostar Tilt Cab FA48, 68, 70, 72	Fa	WG	14 " x 2-1/2 "	1294A - 325	N/A	R40H521	R40H9237	R40H3502	R40H3503
	Fm	WG	14 " x 2-1/2 "	1294 - 296	N/A	R40H521	R40H9201	R40H3524	R40H3524
C1710, C1750 Cargostar Tilt Cab FA71, 73, 101	Fa	WG	15 " x 3 "	1245C - 321	R700321	R40H521	R40H9237	R40H3502	R40H3503
	Fa	WG	15 " x 3-1/2 "	1280B - 322	R464004	R40H521	R40H9237	R40H3502	R40H3503
	Fm	WG	15 " x 3 "	1245A - 235	R700235	R40H521	R40H9201	R40H3524	R40H3524
	Fm	WG	15 " x 3-1/2 "	1280 - 463	R700463	R40H521	R40H9201	R40H3524	R40H3524
C1710, C1750 Cargostar Tilt Cab FA74	Fa	WG	15 " x 3 "	1245C - 321	R700321	R40H521	R40H9237	R40H3502	R40H3503
	Fm	WG	15 " x 3 "	1245A - 235	R700235	R40H521	R40H9201	R40H3524	R40H3524
C1710, C1750 Cargostar Tilt Cab FA78, 81	Fa	WG	15 " x 3 "	1245C - 321	R700321	R40H521	R40H9237	R40H3502	R40H3503
C1710, C1750 Cargostar Tilt Cab FA89, 91, 98	Fa	WG	15 " x 3 "	1245C - 321	R700321	R40H521	R40H9237	R40H3502	R40H3503
	Fm	WG	15 " x 3 "	1245A - 235	R700235	R40H521	R40H9201	R40H3524	R40H3524
C1710, C1750 Cargostar Tilt Cab RA184	Ra	WG	15 " x 4 "	4645A - 376	Discontinued	R40H597	R40H9200	R40H3540	R40H3541
	Rm	WG	15 " x 4 "	4645A - 376	Discontinued	R40H597	R40H9200	R40H3518	R404148
C1710, C1750 Cargostar Tilt Cab RA25, 184	Ra	WG	15 " x 5 "	1252 - 346	R700346	R40H597	R40H9200	R40H3540	R40H3541
	Rm	WG	15 " x 5 "	1252 - 346	R700346	R40H597	R40H9200	R40H3518	R404148
C1710, C1750 Cargostar Tilt Cab RA29, 30, 187	Ra	WG	15 " x 5 "	1252 - 346	R700346	R40H597	R40H9200	R40H3540	R40H3541
	Rm	WG	15 " x 5 "	1252 - 346	R700346	R40H597	R40H9200	R40H3518	R404148
C1710, C1750 Cargostar Tilt Cab RA30, 187	Ra	WG	16 " x 5 "	1254 - 385	N/A	R40H597	R40H9200	NLA	NLA
	Rm	WG	16 " x 5 "	1254 - 385	N/A	R40H597	R40H9200	R404149	R404150
C1710, C1750 Cargostar Tilt Cab RA30, 39, 44, 186, 189	Ra	WG	15 " x 6 "	4596 - 381	R700381	R40H597	R40H9200	R40H3540	R40H3541
	Rm	WG	15 " x 6 "	4596 - 381	R700381	R40H597	R40H9200	R40H3518	R404148
C1710, C1750 Cargostar Tilt Cab RA39, 199	Ra	WG	15 " x 7 "	4597 - 383	R700383	R40H597	R40H9200	R40H3540	R40H3541
	Rm	WG	15 " x 7 "	4597 - 383	R700383	R40H597	R40H9200	R40H3518	R404148
C1710, C1750 Cargostar Tilt Cab RA44, 186	Ra	WG	15 " x 7 "	4597 - 383	R700383	R40H597	R40H9200	NLA	NLA
	Rm	WG	15 " x 7 "	4597 - 383	R700383	R40H597	R40H9200	R40H3518	R404148
C1710, C1750 Cargostar Tilt Cab RA47, 57	Ra	WG	16 " x 6 "	1255 - 386	N/A	R40H597	R40H9200	NLA	NLA
	Rm	WG	16 " x 6 "	1255 - 386	N/A	R40H597	R40H9200	R404149	R404150
S1723, S1753 School Bus FA109, 208	Fa	WG	15 " x 3 "	1245C - 321	R700321	R40H521	R40H9237	R40H3502	R40H3503
	Fm	WG	15 " x 3 "	1245A - 235	R700235	R40H521	R40H9201	R40H3524	R40H3524
S1723, S1753 School Bus FA118, 127, 139	Fa	WG	15 " x 5 "	1345A - 491	N/A	R40H521	R40H9237	R40H3502	R40H3503
	Fm	WG	15 " x 5 "	1345 - 490	N/A	R40H521	R40H9201	R40H3524	R40H3524
S1723, S1753 School Bus FA208	Fa	WG	15 " x 3-1/2 "	1280B - 322	R464004	R40H521	R40H9237	R40H3502	R40H3503

MERITOR DRUM OR ROTOR NO.	CALIPER OR CYLINDER BORE SIZE	MERITOR CALIPER OR WHEEL CYLINDER (LEFT)	MERITOR CALIPER OR WHEEL CYLINDER (RIGHT)	MERITOR CALIPER OR WHEEL CYLINDER REPAIR KIT	MERITOR CALIPER PISTON	MERITOR MASTER CYLINDER	MERITOR MASTER CYLINDER KIT	MERITOR BRAKE HOSE (LEFT)	MERITOR BRAKE HOSE (RIGHT)
									ITE(Cont.)
170, 1700, 1710, 1723, 1724, 1750, 1753, 1754 SERIES CONVENTIONAL CAB, SCHOOL BUS, TILT CAB(Cont.)									
-	1-1/4 "	R4133581	R4133582	R4166923	NR	-	-	-	-
-	1-1/8 "	R4133714	R4133715	R4166926	NR	-	-	-	-
-	1-1/8 "	R4133714	R4133715	R4166926	NR	-	-	-	-
-	1-1/4 "	R4133581	R4133582	R4166923	NR	-	-	-	-
-	1-1/4 "	R4133581	R4133582	R4166923	NR	-	-	-	-
-	1-1/4 "	R4133581	R4133582	R4166923	NR	-	-	-	-
-	1-1/4 "	R4133581	R4133582	R4166923	NR	-	-	-	-
-	1-1/4 "	R4133581	R4133582	R4166923	NR	-	-	-	-
-	1-1/4 "	R4133581	R4133582	R4166923	NR	-	-	-	-
-	1-1/4 "	R4133581	R4133582	R4166923	NR	-	-	-	-
-	1-1/4 "	R4133581	R4133582	R4166923	NR	-	-	-	-
-	1-1/4 "	R4133581	R4133582	R4166923	NR	-	-	-	-
-	1-1/2 "	R4133580	R4133580	Discontinued	NR	-	-	-	-
-	1-1/2 "	R4133580	R4133580	Discontinued	NR	-	-	-	-
-	1-1/2 "	R4133580	R4133580	Discontinued	NR	-	-	-	-
-	1-1/2 "	R4133580	R4133580	Discontinued	NR	-	-	-	-
-	1-1/2 "	R4133580	R4133580	Discontinued	NR	-	-	-	-
-	1-1/2 "	R4133580	R4133580	Discontinued	NR	-	-	-	-
-	1-5/8 "	R4133338	R4133338	R4166689	NR	-	-	-	-
-	1-5/8 "	R4133338	R4133338	R4166689	NR	-	-	-	-
-	1-5/8 "	R4133338	R4133338	R4166689	NR	-	-	-	-
-	1-5/8 "	R4133338	R4133338	R4166689	NR	-	-	-	-
-	1-5/8 "	R4133338	R4133338	R4166689	NR	-	-	-	-
-	1-5/8 "	R4133338	R4133338	R4166689	NR	-	-	-	-
-	1-5/8 "	R4133338	R4133338	R4166689	NR	-	-	-	-
-	1-5/8 "	R4133338	R4133338	R4166689	NR	-	-	-	-
-	1-3/4 "	R4133400	R4133400	R4166917	NR	-	-	-	-
-	1-3/4 "	R4133400	R4133400	R4166917	NR	-	-	-	-
-	1-1/4 "	R4133581	R4133582	R4166923	NR	-	-	-	-
-	1-1/4 "	R4133581	R4133582	R4166923	NR	-	-	-	-
-		-	-	-	-	-	-	-	-
-		-	-	-	-	-	-	-	-
-	1-1/4 "	R4133581	R4133582	R4166923	NR	-	-	-	-

MAKE MODEL YEAR AXLE CODE AXLE WEIGHT	AXLE & BRK. TYPE	BRK. MFG.	BRAKE SIZE	FMSI	MERITOR DISC PAD OR BRAKE SHOE	MERITOR GUIDE PIN OR RETURN SPRING KIT	MERITOR CALIPER HWD. KIT OR RETURN SPRING KIT	MERITOR ADJUSTER KIT (LEFT WHEEL)	MERITOR ADJUSTER KIT (RIGHT WHEEL)
ITE(Cont.)									
170, 1700, 1710, 1723, 1724, 1750, 1753, 1754 SERIES CONVENTIONAL CAB, SCHOOL BUS, TILT CAB(Cont.)									
1972	Fm	WG	15 " x 3-1/2 "	1280 - 463	R700463	R40H521	R40H9201	R40H3524	R40H3524
S1723, S1753 School Bus FA48, 68, 70, 72	Fa	WG	14 " x 2-1/2 "	1294A - 325	N/A	R40H521	R40H9237	R40H3502	R40H3503
	Fm	WG	14 " x 2-1/2 "	1294 - 296	N/A	R40H521	R40H9201	R40H3524	R40H3524
S1723, S1753 School Bus FA71, 73, 101	Fa	WG	15 " x 3 "	1245C - 321	R700321	R40H521	R40H9237	R40H3502	R40H3503
	Fa	WG	15 " x 3-1/2 "	1280B - 322	R464004	R40H521	R40H9237	R40H3502	R40H3503
	Fm	WG	15 " x 3 "	1245A - 235	R700235	R40H521	R40H9201	R40H3524	R40H3524
	Fm	WG	15 " x 3-1/2 "	1280 - 463	R700463	R40H521	R40H9201	R40H3524	R40H3524
S1723, S1753 School Bus FA74	Fa	WG	15 " x 3 "	1245C - 321	R700321	R40H521	R40H9237	R40H3502	R40H3503
	Fm	WG	15 " x 3 "	1245A - 235	R700235	R40H521	R40H9201	R40H3524	R40H3524
S1723, S1753 School Bus FA78, 81	Fa	WG	15 " x 3 "	1245C - 321	R700321	R40H521	R40H9237	R40H3502	R40H3503
S1723, S1753 School Bus FA89, 91, 98	Fa	WG	15 " x 3 "	1245C - 321	R700321	R40H521	R40H9237	R40H3502	R40H3503
	Fm	WG	15 " x 3 "	1245A - 235	R700235	R40H521	R40H9201	R40H3524	R40H3524
S1723, S1753 School Bus RA184	Ra	WG	15 " x 4 "	4645A - 376	Discontinued	R40H597	R40H9200	R40H3540	R40H3541
	Rm	WG	15 " x 4 "	4645A - 376	Discontinued	R40H597	R40H9200	R40H3518	R404148
S1723, S1753 School Bus RA25, 184	Ra	WG	15 " x 5 "	1252 - 346	R700346	R40H597	R40H9200	R40H3540	R40H3541
	Rm	WG	15 " x 5 "	1252 - 346	R700346	R40H597	R40H9200	R40H3518	R404148
S1723, S1753 School Bus RA29, 30, 187	Ra	WG	15 " x 5 "	1252 - 346	R700346	R40H597	R40H9200	R40H3540	R40H3541
	Rm	WG	15 " x 5 "	1252 - 346	R700346	R40H597	R40H9200	R40H3518	R404148
S1723, S1753 School Bus RA30, 187	Ra	WG	16 " x 5 "	1254 - 385	N/A	R40H597	R40H9200	NLA	NLA
	Rm	WG	16 " x 5 "	1254 - 385	N/A	R40H597	R40H9200	R404149	R404150
S1723, S1753 School Bus RA30, 39, 44, 186, 189	Ra	WG	15 " x 6 "	4596 - 381	R700381	R40H597	R40H9200	R40H3540	R40H3541
	Rm	WG	15 " x 6 "	4596 - 381	R700381	R40H597	R40H9200	R40H3518	R404148
S1723, S1753 School Bus RA39, 199	Ra	WG	15 " x 7 "	4597 - 383	R700383	R40H597	R40H9200	R40H3540	R40H3541
	Rm	WG	15 " x 7 "	4597 - 383	R700383	R40H597	R40H9200	R40H3518	R404148
S1723, S1753 School Bus RA44, 186	Ra	WG	15 " x 7 "	4597 - 383	R700383	R40H597	R40H9200	NLA	NLA
	Rm	WG	15 " x 7 "	4597 - 383	R700383	R40H597	R40H9200	R40H3518	R404148
S1723, S1753 School Bus RA47, 57	Ra	WG	16 " x 6 "	1255 - 386	N/A	R40H597	R40H9200	NLA	NLA
	Rm	WG	16 " x 6 "	1255 - 386	N/A	R40H597	R40H9200	R404149	R404150
S1724, S1754 Conventional FA109, 208	Fa	WG	15 " x 3 "	1245C - 321	R700321	R40H521	R40H9237	R40H3502	R40H3503
	Fm	WG	15 " x 3 "	1245A - 235	R700235	R40H521	R40H9201	R40H3524	R40H3524
S1724, S1754 Conventional FA118, 127, 139	Fa	WG	15 " x 5 "	1345A - 491	N/A	R40H521	R40H9237	R40H3502	R40H3503
	Fm	WG	15 " x 5 "	1345 - 490	N/A	R40H521	R40H9201	R40H3524	R40H3524
S1724, S1754 Conventional FA208	Fa	WG	15 " x 3-1/2 "	1280B - 322	R464004	R40H521	R40H9237	R40H3502	R40H3503
	Fm	WG	15 " x 3-1/2 "	1280 - 463	R700463	R40H521	R40H9201	R40H3524	R40H3524
S1724, S1754 Conventional FA48, 68, 70, 72	Fa	WG	14 " x 2-1/2 "	1294A - 325	N/A	R40H521	R40H9237	R40H3502	R40H3503
	Fm	WG	14 " x 2-1/2 "	1294 - 296	N/A	R40H521	R40H9201	R40H3524	R40H3524
S1724, S1754 Conventional FA71, 73, 101	Fa	WG	15 " x 3 "	1245C - 321	R700321	R40H521	R40H9237	R40H3502	R40H3503
	Fa	WG	15 " x 3-1/2 "	1280B - 322	R464004	R40H521	R40H9237	R40H3502	R40H3503
	Fm	WG	15 " x 3 "	1245A - 235	R700235	R40H521	R40H9201	R40H3524	R40H3524
	Fm	WG	15 " x 3-1/2 "	1280 - 463	R700463	R40H521	R40H9201	R40H3524	R40H3524
S1724, S1754 Conventional FA74	Fa	WG	15 " x 3 "	1245C - 321	R700321	R40H521	R40H9237	R40H3502	R40H3503
	Fm	WG	15 " x 3 "	1245A - 235	R700235	R40H521	R40H9201	R40H3524	R40H3524

MERITOR DRUM OR ROTOR NO.	CALIPER OR CYLINDER BORE SIZE	MERITOR CALIPER OR WHEEL CYLINDER (LEFT)	MERITOR CALIPER OR WHEEL CYLINDER (RIGHT)	MERITOR CALIPER OR WHEEL CYLINDER REPAIR KIT	MERITOR CALIPER PISTON	MERITOR MASTER CYLINDER	MERITOR MASTER CYLINDER KIT	MERITOR BRAKE HOSE (LEFT)	MERITOR BRAKE HOSE (RIGHT)
									ITE(Cont.)
170, 1700, 1710, 1723, 1724, 1750, 1753, 1754 SERIES CONVENTIONAL CAB, SCHOOL BUS, TILT CAB(Cont.)									
-	1-1/4 "	R4133581	R4133582	R4166923	NR	-	-	-	-
-	1-1/8 "	R4133714	R4133715	R4166926	NR	-	-	-	-
-	1-1/8 "	R4133714	R4133715	R4166926	NR	-	-	-	-
-	1-1/4 "	R4133581	R4133582	R4166923	NR	-	-	-	-
-	1-1/4 "	R4133581	R4133582	R4166923	NR	-	-	-	-
-	1-1/4 "	R4133581	R4133582	R4166923	NR	-	-	-	-
-	1-1/4 "	R4133581	R4133582	R4166923	NR	-	-	-	-
-	1-1/4 "	R4133581	R4133582	R4166923	NR	-	-	-	-
-	1-1/4 "	R4133581	R4133582	R4166923	NR	-	-	-	-
-	1-1/4 "	R4133581	R4133582	R4166923	NR	-	-	-	-
-	1-1/4 "	R4133581	R4133582	R4166923	NR	-	-	-	-
-	1-1/4 "	R4133581	R4133582	R4166923	NR	-	-	-	-
-	1-1/2 "	R4133580	R4133580	Discontinued	NR	-	-	-	-
-	1-1/2 "	R4133580	R4133580	Discontinued	NR	-	-	-	-
-	1-1/2 "	R4133580	R4133580	Discontinued	NR	-	-	-	-
-	1-1/2 "	R4133580	R4133580	Discontinued	NR	-	-	-	-
-	1-1/2 "	R4133580	R4133580	Discontinued	NR	-	-	-	-
-	1-1/2 "	R4133580	R4133580	Discontinued	NR	-	-	-	-
-	1-5/8 "	R4133338	R4133338	R4166689	NR	-	-	-	-
-	1-5/8 "	R4133338	R4133338	R4166689	NR	-	-	-	-
-	1-5/8 "	R4133338	R4133338	R4166689	NR	-	-	-	-
-	1-5/8 "	R4133338	R4133338	R4166689	NR	-	-	-	-
-	1-5/8 "	R4133338	R4133338	R4166689	NR	-	-	-	-
-	1-5/8 "	R4133338	R4133338	R4166689	NR	-	-	-	-
-	1-5/8 "	R4133338	R4133338	R4166689	NR	-	-	-	-
-	1-5/8 "	R4133338	R4133338	R4166689	NR	-	-	-	-
-	1-3/4 "	R4133400	R4133400	R4166917	NR	-	-	-	-
-	1-3/4 "	R4133400	R4133400	R4166917	NR	-	-	-	-
-	1-1/4 "	R4133581	R4133582	R4166923	NR	-	-	-	-
-	1-1/4 "	R4133581	R4133582	R4166923	NR	-	-	-	-
-		-	-	-	-	-	-	-	-
-		-	-	-	-	-	-	-	-
-	1-1/4 "	R4133581	R4133582	R4166923	NR	-	-	-	-
-	1-1/4 "	R4133581	R4133582	R4166923	NR	-	-	-	-
-	1-1/8 "	R4133714	R4133715	R4166926	NR	-	-	-	-
-	1-1/8 "	R4133714	R4133715	R4166926	NR	-	-	-	-
-	1-1/4 "	R4133581	R4133582	R4166923	NR	-	-	-	-
-	1-1/4 "	R4133581	R4133582	R4166923	NR	-	-	-	-
-	1-1/4 "	R4133581	R4133582	R4166923	NR	-	-	-	-
-	1-1/4 "	R4133581	R4133582	R4166923	NR	-	-	-	-
-	1-1/4 "	R4133581	R4133582	R4166923	NR	-	-	-	-
-	1-1/4 "	R4133581	R4133582	R4166923	NR	-	-	-	-

MAKE MODEL YEAR AXLE CODE AXLE WEIGHT	AXLE & BRK. TYPE	BRK. MFG.	BRAKE SIZE	FMSI	MERITOR DISC PAD OR BRAKE SHOE	MERITOR GUIDE PIN OR RETURN SPRING KIT	MERITOR CALIPER HWD. KIT OR RETURN SPRING KIT	MERITOR ADJUSTER KIT (LEFT WHEEL)	MERITOR ADJUSTER KIT (RIGHT WHEEL)
ITE(Cont.)									
170, 1700, 1710, 1723, 1724, 1750, 1753, 1754 SERIES CONVENTIONAL CAB, SCHOOL BUS, TILT CAB(Cont.)									
1972 S1724, S1754 Conventional FA78, 81	Fa	WG	15 " x 3 "	1245C - 321	R700321	R40H521	R40H9237	R40H3502	R40H3503
S1724, S1754 Conventional FA89, 91, 98	Fa	WG	15 " x 3 "	1245C - 321	R700321	R40H521	R40H9237	R40H3502	R40H3503
	Fm	WG	15 " x 3 "	1245A - 235	R700235	R40H521	R40H9201	R40H3524	R40H3524
S1724, S1754 Conventional RA184	Ra	WG	15 " x 4 "	4645A - 376	Discontinued	R40H597	R40H9200	R40H3540	R40H3541
	Rm	WG	15 " x 4 "	4645A - 376	Discontinued	R40H597	R40H9200	R40H3518	R404148
S1724, S1754 Conventional RA25, 184	Ra	WG	15 " x 5 "	1252 - 346	R700346	R40H597	R40H9200	R40H3540	R40H3541
	Rm	WG	15 " x 5 "	1252 - 346	R700346	R40H597	R40H9200	R40H3518	R404148
S1724, S1754 Conventional RA29, 30, 187	Ra	WG	15 " x 5 "	1252 - 346	R700346	R40H597	R40H9200	R40H3540	R40H3541
	Rm	WG	15 " x 5 "	1252 - 346	R700346	R40H597	R40H9200	R40H3518	R404148
S1724, S1754 Conventional RA30, 187	Ra	WG	16 " x 5 "	1254 - 385	N/A	R40H597	R40H9200	NLA	NLA
	Rm	WG	16 " x 5 "	1254 - 385	N/A	R40H597	R40H9200	R404149	R404150
S1724, S1754 Conventional RA30, 39, 44, 186, 189	Ra	WG	15 " x 6 "	4596 - 381	R700381	R40H597	R40H9200	R40H3540	R40H3541
	Rm	WG	15 " x 6 "	4596 - 381	R700381	R40H597	R40H9200	R40H3518	R404148
S1724, S1754 Conventional RA39, 199	Ra	WG	15 " x 7 "	4597 - 383	R700383	R40H597	R40H9200	R40H3540	R40H3541
	Rm	WG	15 " x 7 "	4597 - 383	R700383	R40H597	R40H9200	R40H3518	R404148
S1724, S1754 Conventional RA44, 186	Ra	WG	15 " x 7 "	4597 - 383	R700383	R40H597	R40H9200	NLA	NLA
	Rm	WG	15 " x 7 "	4597 - 383	R700383	R40H597	R40H9200	R40H3518	R404148
S1724, S1754 Conventional RA47, 57	Ra	WG	16 " x 6 "	1255 - 386	N/A	R40H597	R40H9200	NLA	NLA
	Rm	WG	16 " x 6 "	1255 - 386	N/A	R40H597	R40H9200	R404149	R404150
1971 C1710, C1750 Cargostar Tilt Cab FA109, 208	Fa	WG	15 " x 3 "	1245C - 321	R700321	R40H521	R40H9237	R40H3502	R40H3503
	Fm	WG	15 " x 3 "	1245A - 235	R700235	R40H521	R40H9201	R40H3524	R40H3524
C1710, C1750 Cargostar Tilt Cab FA118, 127, 139	Fa	WG	15 " x 5 "	1345A - 491	N/A	R40H521	R40H9237	R40H3502	R40H3503
	Fm	WG	15 " x 5 "	1345 - 490	N/A	R40H521	R40H9201	R40H3524	R40H3524
C1710, C1750 Cargostar Tilt Cab FA208	Fa	WG	15 " x 3-1/2 "	1280B - 322	R464004	R40H521	R40H9237	R40H3502	R40H3503
	Fm	WG	15 " x 3-1/2 "	1280 - 463	R700463	R40H521	R40H9201	R40H3524	R40H3524
C1710, C1750 Cargostar Tilt Cab FA48, 68, 70, 72	Fa	WG	14 " x 2-1/2 "	1294A - 325	N/A	R40H521	R40H9237	R40H3502	R40H3503
	Fm	WG	14 " x 2-1/2 "	1294 - 296	N/A	R40H521	R40H9201	R40H3524	R40H3524
C1710, C1750 Cargostar Tilt Cab FA71, 73, 101	Fa	WG	15 " x 3 "	1245C - 321	R700321	R40H521	R40H9237	R40H3502	R40H3503
	Fa	WG	15 " x 3-1/2 "	1280B - 322	R464004	R40H521	R40H9237	R40H3502	R40H3503
	Fm	WG	15 " x 3 "	1245A - 235	R700235	R40H521	R40H9201	R40H3524	R40H3524
	Fm	WG	15 " x 3-1/2 "	1280 - 463	R700463	R40H521	R40H9201	R40H3524	R40H3524
C1710, C1750 Cargostar Tilt Cab FA74	Fa	WG	15 " x 3 "	1245C - 321	R700321	R40H521	R40H9237	R40H3502	R40H3503
	Fm	WG	15 " x 3 "	1245A - 235	R700235	R40H521	R40H9201	R40H3524	R40H3524
C1710, C1750 Cargostar Tilt Cab FA78, 81	Fa	WG	15 " x 3 "	1245C - 321	R700321	R40H521	R40H9237	R40H3502	R40H3503
C1710, C1750 Cargostar Tilt Cab FA89, 91, 98	Fa	WG	15 " x 3 "	1245C - 321	R700321	R40H521	R40H9237	R40H3502	R40H3503

MERITOR DRUM OR ROTOR NO.	CALIPER OR CYLINDER BORE SIZE	MERITOR CALIPER OR WHEEL CYLINDER (LEFT)	MERITOR CALIPER OR WHEEL CYLINDER (RIGHT)	MERITOR CALIPER OR WHEEL CYLINDER REPAIR KIT	MERITOR CALIPER PISTON	MERITOR MASTER CYLINDER	MERITOR MASTER CYLINDER KIT	MERITOR BRAKE HOSE (LEFT)	MERITOR BRAKE HOSE (RIGHT)
									ITE(Cont.)
170, 1700, 1710, 1723, 1724, 1750, 1753, 1754 SERIES CONVENTIONAL CAB, SCHOOL BUS, TILT CAB(Cont.)									
-	1-1/4 "	R4133581	R4133582	R4166923	NR	-	-	-	-
-	1-1/4 "	R4133581	R4133582	R4166923	NR	-	-	-	-
-	1-1/4 "	R4133581	R4133582	R4166923	NR	-	-	-	-
-	1-1/2 "	R4133580	R4133580	Discontinued	NR	-	-	-	-
-	1-1/2 "	R4133580	R4133580	Discontinued	NR	-	-	-	-
-	1-1/2 "	R4133580	R4133580	Discontinued	NR	-	-	-	-
-	1-1/2 "	R4133580	R4133580	Discontinued	NR	-	-	-	-
-	1-1/2 "	R4133580	R4133580	Discontinued	NR	-	-	-	-
-	1-1/2 "	R4133580	R4133580	Discontinued	NR	-	-	-	-
-	1-5/8 "	R4133338	R4133338	R4166689	NR	-	-	-	-
-	1-5/8 "	R4133338	R4133338	R4166689	NR	-	-	-	-
-	1-5/8 "	R4133338	R4133338	R4166689	NR	-	-	-	-
-	1-5/8 "	R4133338	R4133338	R4166689	NR	-	-	-	-
-	1-5/8 "	R4133338	R4133338	R4166689	NR	-	-	-	-
-	1-5/8 "	R4133338	R4133338	R4166689	NR	-	-	-	-
-	1-5/8 "	R4133338	R4133338	R4166689	NR	-	-	-	-
-	1-5/8 "	R4133338	R4133338	R4166689	NR	-	-	-	-
-	1-3/4 "	R4133400	R4133400	R4166917	NR	-	-	-	-
-	1-3/4 "	R4133400	R4133400	R4166917	NR	-	-	-	-
-	1-1/4 "	R4133581	R4133582	R4166923	NR	-	-	-	-
-	1-1/4 "	R4133581	R4133582	R4166923	NR	-	-	-	-
-		-	-	-	-	-	-	-	-
-		-	-	-	-	-	-	-	-
-	1-1/4 "	R4133581	R4133582	R4166923	NR	-	-	-	-
-	1-1/4 "	R4133581	R4133582	R4166923	NR	-	-	-	-
-	1-1/8 "	R4133714	R4133715	R4166926	NR	-	-	-	-
-	1-1/8 "	R4133714	R4133715	R4166926	NR	-	-	-	-
-	1-1/4 "	R4133581	R4133582	R4166923	NR	-	-	-	-
-	1-1/4 "	R4133581	R4133582	R4166923	NR	-	-	-	-
-	1-1/4 "	R4133581	R4133582	R4166923	NR	-	-	-	-
-	1-1/4 "	R4133581	R4133582	R4166923	NR	-	-	-	-
-	1-1/4 "	R4133581	R4133582	R4166923	NR	-	-	-	-
-	1-1/4 "	R4133581	R4133582	R4166923	NR	-	-	-	-
-	1-1/4 "	R4133581	R4133582	R4166923	NR	-	-	-	-
-	1-1/4 "	R4133581	R4133582	R4166923	NR	-	-	-	-

MAKE MODEL YEAR AXLE CODE AXLE WEIGHT	AXLE & BRK. TYPE	BRK. MFG.	BRAKE SIZE	FMSI	MERITOR DISC PAD OR BRAKE SHOE	MERITOR GUIDE PIN OR RETURN SPRING KIT	MERITOR CALIPER HWD. KIT OR RETURN SPRING KIT	MERITOR ADJUSTER KIT (LEFT WHEEL)	MERITOR ADJUSTER KIT (RIGHT WHEEL)
ITE(Cont.)									
170, 1700, 1710, 1723, 1724, 1750, 1753, 1754 SERIES CONVENTIONAL CAB, SCHOOL BUS, TILT CAB(Cont.)									
1971	Fm	WG	15 " x 3 "	1245A - 235	R700235	R40H521	R40H9201	R40H3524	R40H3524
C1710, C1750 Cargostar Tilt Cab RA184	Ra	WG	15 " x 4 "	4645A - 376	Discontinued	R40H597	R40H9200	R40H3540	R40H3541
	Rm	WG	15 " x 4 "	4645A - 376	Discontinued	R40H597	R40H9200	R40H3518	R404148
C1710, C1750 Cargostar Tilt Cab RA25, 184	Ra	WG	15 " x 5 "	1252 - 346	R700346	R40H597	R40H9200	R40H3540	R40H3541
	Rm	WG	15 " x 5 "	1252 - 346	R700346	R40H597	R40H9200	R40H3518	R404148
C1710, C1750 Cargostar Tilt Cab RA29, 30, 187	Ra	WG	15 " x 5 "	1252 - 346	R700346	R40H597	R40H9200	R40H3540	R40H3541
	Rm	WG	15 " x 5 "	1252 - 346	R700346	R40H597	R40H9200	R40H3518	R404148
C1710, C1750 Cargostar Tilt Cab RA30, 187	Ra	WG	16 " x 5 "	1254 - 385	N/A	R40H597	R40H9200	NLA	NLA
	Rm	WG	16 " x 5 "	1254 - 385	N/A	R40H597	R40H9200	R404149	R404150
C1710, C1750 Cargostar Tilt Cab RA30, 39, 44, 186, 189	Ra	WG	15 " x 6 "	4596 - 381	R700381	R40H597	R40H9200	R40H3540	R40H3541
	Rm	WG	15 " x 6 "	4596 - 381	R700381	R40H597	R40H9200	R40H3518	R404148
C1710, C1750 Cargostar Tilt Cab RA39, 199	Ra	WG	15 " x 7 "	4597 - 383	R700383	R40H597	R40H9200	R40H3540	R40H3541
	Rm	WG	15 " x 7 "	4597 - 383	R700383	R40H597	R40H9200	R40H3518	R404148
C1710, C1750 Cargostar Tilt Cab RA44, 186	Ra	WG	15 " x 7 "	4597 - 383	R700383	R40H597	R40H9200	NLA	NLA
	Rm	WG	15 " x 7 "	4597 - 383	R700383	R40H597	R40H9200	R40H3518	R404148
C1710, C1750 Cargostar Tilt Cab RA47, 57	Ra	WG	16 " x 6 "	1255 - 386	N/A	R40H597	R40H9200	NLA	NLA
	Rm	WG	16 " x 6 "	1255 - 386	N/A	R40H597	R40H9200	R404149	R404150
S1723, S1753 School Bus FA109, 208	Fa	WG	15 " x 3 "	1245C - 321	R700321	R40H521	R40H9237	R40H3502	R40H3503
	Fm	WG	15 " x 3 "	1245A - 235	R700235	R40H521	R40H9201	R40H3524	R40H3524
S1723, S1753 School Bus FA118, 127, 139	Fa	WG	15 " x 5 "	1345A - 491	N/A	R40H521	R40H9237	R40H3502	R40H3503
	Fm	WG	15 " x 5 "	1345 - 490	N/A	R40H521	R40H9201	R40H3524	R40H3524
S1723, S1753 School Bus FA208	Fa	WG	15 " x 3-1/2 "	1280B - 322	R464004	R40H521	R40H9237	R40H3502	R40H3503
	Fm	WG	15 " x 3-1/2 "	1280 - 463	R700463	R40H521	R40H9201	R40H3524	R40H3524
S1723, S1753 School Bus FA48, 68, 70, 72	Fa	WG	14 " x 2-1/2 "	1294A - 325	N/A	R40H521	R40H9237	R40H3502	R40H3503
	Fm	WG	14 " x 2-1/2 "	1294 - 296	N/A	R40H521	R40H9201	R40H3524	R40H3524
S1723, S1753 School Bus FA71, 73, 101	Fa	WG	15 " x 3 "	1245C - 321	R700321	R40H521	R40H9237	R40H3502	R40H3503
	Fa	WG	15 " x 3-1/2 "	1280B - 322	R464004	R40H521	R40H9237	R40H3502	R40H3503
	Fm	WG	15 " x 3 "	1245A - 235	R700235	R40H521	R40H9201	R40H3524	R40H3524
	Fm	WG	15 " x 3-1/2 "	1280 - 463	R700463	R40H521	R40H9201	R40H3524	R40H3524
S1723, S1753 School Bus FA74	Fa	WG	15 " x 3 "	1245C - 321	R700321	R40H521	R40H9237	R40H3502	R40H3503
	Fm	WG	15 " x 3 "	1245A - 235	R700235	R40H521	R40H9201	R40H3524	R40H3524
S1723, S1753 School Bus FA78, 81	Fa	WG	15 " x 3 "	1245C - 321	R700321	R40H521	R40H9237	R40H3502	R40H3503
S1723, S1753 School Bus FA89, 91, 98	Fa	WG	15 " x 3 "	1245C - 321	R700321	R40H521	R40H9237	R40H3502	R40H3503
	Fm	WG	15 " x 3 "	1245A - 235	R700235	R40H521	R40H9201	R40H3524	R40H3524
S1723, S1753 School Bus RA184	Ra	WG	15 " x 4 "	4645A - 376	Discontinued	R40H597	R40H9200	R40H3540	R40H3541
	Rm	WG	15 " x 4 "	4645A - 376	Discontinued	R40H597	R40H9200	R40H3518	R404148

MERITOR DRUM OR ROTOR NO.	CALIPER OR CYLINDER BORE SIZE	MERITOR CALIPER OR WHEEL CYLINDER (LEFT)	MERITOR CALIPER OR WHEEL CYLINDER (RIGHT)	MERITOR CALIPER OR WHEEL CYLINDER REPAIR KIT	MERITOR CALIPER PISTON	MERITOR MASTER CYLINDER	MERITOR MASTER CYLINDER KIT	MERITOR BRAKE HOSE (LEFT)	MERITOR BRAKE HOSE (RIGHT)
									ITE(Cont.)
170, 1700, 1710, 1723, 1724, 1750, 1753, 1754 SERIES CONVENTIONAL CAB, SCHOOL BUS, TILT CAB(Cont.)									
-	1-1/4 "	R4133581	R4133582	R4166923	NR	-	-	-	-
-	1-1/2 "	R4133580	R4133580	Discontinued	NR	-	-	-	-
-	1-1/2 "	R4133580	R4133580	Discontinued	NR	-	-	-	-
-	1-1/2 "	R4133580	R4133580	Discontinued	NR	-	-	-	-
-	1-1/2 "	R4133580	R4133580	Discontinued	NR	-	-	-	-
-	1-1/2 "	R4133580	R4133580	Discontinued	NR	-	-	-	-
-	1-1/2 "	R4133580	R4133580	Discontinued	NR	-	-	-	-
-	1-5/8 "	R4133338	R4133338	R4166689	NR	-	-	-	-
-	1-5/8 "	R4133338	R4133338	R4166689	NR	-	-	-	-
-	1-5/8 "	R4133338	R4133338	R4166689	NR	-	-	-	-
-	1-5/8 "	R4133338	R4133338	R4166689	NR	-	-	-	-
-	1-5/8 "	R4133338	R4133338	R4166689	NR	-	-	-	-
-	1-5/8 "	R4133338	R4133338	R4166689	NR	-	-	-	-
-	1-5/8 "	R4133338	R4133338	R4166689	NR	-	-	-	-
-	1-5/8 "	R4133338	R4133338	R4166689	NR	-	-	-	-
-	1-3/4 "	R4133400	R4133400	R4166917	NR	-	-	-	-
-	1-3/4 "	R4133400	R4133400	R4166917	NR	-	-	-	-
-	1-1/4 "	R4133581	R4133582	R4166923	NR	-	-	-	-
-	1-1/4 "	R4133581	R4133582	R4166923	NR	-	-	-	-
-		-	-	-	-	-	-	-	-
-		-	-	-	-	-	-	-	-
-	1-1/4 "	R4133581	R4133582	R4166923	NR	-	-	-	-
-	1-1/4 "	R4133581	R4133582	R4166923	NR	-	-	-	-
-	1-1/8 "	R4133714	R4133715	R4166926	NR	-	-	-	-
-	1-1/8 "	R4133714	R4133715	R4166926	NR	-	-	-	-
-	1-1/4 "	R4133581	R4133582	R4166923	NR	-	-	-	-
-	1-1/4 "	R4133581	R4133582	R4166923	NR	-	-	-	-
-	1-1/4 "	R4133581	R4133582	R4166923	NR	-	-	-	-
-	1-1/4 "	R4133581	R4133582	R4166923	NR	-	-	-	-
-	1-1/4 "	R4133581	R4133582	R4166923	NR	-	-	-	-
-	1-1/4 "	R4133581	R4133582	R4166923	NR	-	-	-	-
-	1-1/4 "	R4133581	R4133582	R4166923	NR	-	-	-	-
-	1-1/4 "	R4133581	R4133582	R4166923	NR	-	-	-	-
-	1-1/4 "	R4133581	R4133582	R4166923	NR	-	-	-	-
-	1-1/2 "	R4133580	R4133580	Discontinued	NR	-	-	-	-
-	1-1/2 "	R4133580	R4133580	Discontinued	NR	-	-	-	-

MAKE MODEL YEAR AXLE CODE AXLE WEIGHT	AXLE & BRK. TYPE	BRK. MFG.	BRAKE SIZE	FMSI	MERITOR DISC PAD OR BRAKE SHOE	MERITOR GUIDE PIN OR RETURN SPRING KIT	MERITOR CALIPER HWD. KIT OR RETURN SPRING KIT	MERITOR ADJUSTER KIT (LEFT WHEEL)	MERITOR ADJUSTER KIT (RIGHT WHEEL)
ITE(Cont.)									
170, 1700, 1710, 1723, 1724, 1750, 1753, 1754 SERIES CONVENTIONAL CAB, SCHOOL BUS, TILT CAB(Cont.)									
1971 S1723, S1753 School Bus RA25, 184	Ra	WG	15 " x 5 "	1252 - 346	R700346	R40H597	R40H9200	R40H3540	R40H3541
	Rm	WG	15 " x 5 "	1252 - 346	R700346	R40H597	R40H9200	R40H3518	R404148
S1723, S1753 School Bus RA29, 30, 187	Ra	WG	15 " x 5 "	1252 - 346	R700346	R40H597	R40H9200	R40H3540	R40H3541
	Rm	WG	15 " x 5 "	1252 - 346	R700346	R40H597	R40H9200	R40H3518	R404148
S1723, S1753 School Bus RA30, 187	Ra	WG	16 " x 5 "	1254 - 385	N/A	R40H597	R40H9200	NLA	NLA
	Rm	WG	16 " x 5 "	1254 - 385	N/A	R40H597	R40H9200	R404149	R404150
S1723, S1753 School Bus RA30, 39, 44, 186, 189	Ra	WG	15 " x 6 "	4596 - 381	R700381	R40H597	R40H9200	R40H3540	R40H3541
	Rm	WG	15 " x 6 "	4596 - 381	R700381	R40H597	R40H9200	R40H3518	R404148
S1723, S1753 School Bus RA39, 199	Ra	WG	15 " x 7 "	4597 - 383	R700383	R40H597	R40H9200	R40H3540	R40H3541
	Rm	WG	15 " x 7 "	4597 - 383	R700383	R40H597	R40H9200	R40H3518	R404148
S1723, S1753 School Bus RA44, 186	Ra	WG	15 " x 7 "	4597 - 383	R700383	R40H597	R40H9200	NLA	NLA
	Rm	WG	15 " x 7 "	4597 - 383	R700383	R40H597	R40H9200	R40H3518	R404148
S1723, S1753 School Bus RA47, 57	Ra	WG	16 " x 6 "	1255 - 386	N/A	R40H597	R40H9200	NLA	NLA
	Rm	WG	16 " x 6 "	1255 - 386	N/A	R40H597	R40H9200	R404149	R404150
S1724, S1754 Conventional FA109, 208	Fa	WG	15 " x 3 "	1245C - 321	R700321	R40H521	R40H9237	R40H3502	R40H3503
	Fm	WG	15 " x 3 "	1245A - 235	R700235	R40H521	R40H9201	R40H3524	R40H3524
S1724, S1754 Conventional FA118, 127, 139	Fa	WG	15 " x 5 "	1345A - 491	N/A	R40H521	R40H9237	R40H3502	R40H3503
	Fm	WG	15 " x 5 "	1345 - 490	N/A	R40H521	R40H9201	R40H3524	R40H3524
S1724, S1754 Conventional FA208	Fa	WG	15 " x 3-1/2 "	1280B - 322	R464004	R40H521	R40H9237	R40H3502	R40H3503
	Fm	WG	15 " x 3-1/2 "	1280 - 463	R700463	R40H521	R40H9201	R40H3524	R40H3524
S1724, S1754 Conventional FA48, 68, 70, 72	Fa	WG	14 " x 2-1/2 "	1294A - 325	N/A	R40H521	R40H9237	R40H3502	R40H3503
	Fm	WG	14 " x 2-1/2 "	1294 - 296	N/A	R40H521	R40H9201	R40H3524	R40H3524
S1724, S1754 Conventional FA71, 73, 101	Fa	WG	15 " x 3 "	1245C - 321	R700321	R40H521	R40H9237	R40H3502	R40H3503
	Fa	WG	15 " x 3-1/2 "	1280B - 322	R464004	R40H521	R40H9237	R40H3502	R40H3503
	Fm	WG	15 " x 3 "	1245A - 235	R700235	R40H521	R40H9201	R40H3524	R40H3524
	Fm	WG	15 " x 3-1/2 "	1280 - 463	R700463	R40H521	R40H9201	R40H3524	R40H3524
S1724, S1754 Conventional FA74	Fa	WG	15 " x 3 "	1245C - 321	R700321	R40H521	R40H9237	R40H3502	R40H3503
	Fm	WG	15 " x 3 "	1245A - 235	R700235	R40H521	R40H9201	R40H3524	R40H3524
S1724, S1754 Conventional FA78, 81	Fa	WG	15 " x 3 "	1245C - 321	R700321	R40H521	R40H9237	R40H3502	R40H3503
S1724, S1754 Conventional FA89, 91, 98	Fa	WG	15 " x 3 "	1245C - 321	R700321	R40H521	R40H9237	R40H3502	R40H3503
	Fm	WG	15 " x 3 "	1245A - 235	R700235	R40H521	R40H9201	R40H3524	R40H3524
S1724, S1754 Conventional RA184	Ra	WG	15 " x 4 "	4645A - 376	Discontinued	R40H597	R40H9200	R40H3540	R40H3541
	Rm	WG	15 " x 4 "	4645A - 376	Discontinued	R40H597	R40H9200	R40H3518	R404148
S1724, S1754 Conventional RA25, 184	Ra	WG	15 " x 5 "	1252 - 346	R700346	R40H597	R40H9200	R40H3540	R40H3541
	Rm	WG	15 " x 5 "	1252 - 346	R700346	R40H597	R40H9200	R40H3518	R404148
S1724, S1754 Conventional RA29, 30, 187	Ra	WG	15 " x 5 "	1252 - 346	R700346	R40H597	R40H9200	R40H3540	R40H3541
	Rm	WG	15 " x 5 "	1252 - 346	R700346	R40H597	R40H9200	R40H3518	R404148
S1724, S1754 Conventional RA30, 187	Ra	WG	16 " x 5 "	1254 - 385	N/A	R40H597	R40H9200	NLA	NLA
	Rm	WG	16 " x 5 "	1254 - 385	N/A	R40H597	R40H9200	R404149	R404150
S1724, S1754 Conventional RA30, 39, 44, 186, 189	Ra	WG	15 " x 6 "	4596 - 381	R700381	R40H597	R40H9200	R40H3540	R40H3541
	Rm	WG	15 " x 6 "	4596 - 381	R700381	R40H597	R40H9200	R40H3518	R404148

MERITOR DRUM OR ROTOR NO.	CALIPER OR CYLINDER BORE SIZE	MERITOR CALIPER OR WHEEL CYLINDER (LEFT)	MERITOR CALIPER OR WHEEL CYLINDER (RIGHT)	MERITOR CALIPER OR WHEEL CYLINDER REPAIR KIT	MERITOR CALIPER PISTON	MERITOR MASTER CYLINDER	MERITOR MASTER CYLINDER KIT	MERITOR BRAKE HOSE (LEFT)	MERITOR BRAKE HOSE (RIGHT)
									ITE(Cont.)
170, 1700, 1710, 1723, 1724, 1750, 1753, 1754 SERIES CONVENTIONAL CAB, SCHOOL BUS, TILT CAB(Cont.)									
-	1-1/2 "	R4133580	R4133580	Discontinued	NR	-	-	-	-
-	1-1/2 "	R4133580	R4133580	Discontinued	NR	-	-	-	-
-	1-1/2 "	R4133580	R4133580	Discontinued	NR	-	-	-	-
-	1-1/2 "	R4133580	R4133580	Discontinued	NR	-	-	-	-
-	1-5/8 "	R4133338	R4133338	R4166689	NR	-	-	-	-
-	1-5/8 "	R4133338	R4133338	R4166689	NR	-	-	-	-
-	1-5/8 "	R4133338	R4133338	R4166689	NR	-	-	-	-
-	1-5/8 "	R4133338	R4133338	R4166689	NR	-	-	-	-
-	1-5/8 "	R4133338	R4133338	R4166689	NR	-	-	-	-
-	1-5/8 "	R4133338	R4133338	R4166689	NR	-	-	-	-
-	1-5/8 "	R4133338	R4133338	R4166689	NR	-	-	-	-
-	1-5/8 "	R4133338	R4133338	R4166689	NR	-	-	-	-
-	1-3/4 "	R4133400	R4133400	R4166917	NR	-	-	-	-
-	1-3/4 "	R4133400	R4133400	R4166917	NR	-	-	-	-
-	1-1/4 "	R4133581	R4133582	R4166923	NR	-	-	-	-
-	1-1/4 "	R4133581	R4133582	R4166923	NR	-	-	-	-
-		-	-	-	-	-	-	-	-
-		-	-	-	-	-	-	-	-
-	1-1/4 "	R4133581	R4133582	R4166923	NR	-	-	-	-
-	1-1/4 "	R4133581	R4133582	R4166923	NR	-	-	-	-
-	1-1/8 "	R4133714	R4133715	R4166926	NR	-	-	-	-
-	1-1/8 "	R4133714	R4133715	R4166926	NR	-	-	-	-
-	1-1/4 "	R4133581	R4133582	R4166923	NR	-	-	-	-
-	1-1/4 "	R4133581	R4133582	R4166923	NR	-	-	-	-
-	1-1/4 "	R4133581	R4133582	R4166923	NR	-	-	-	-
-	1-1/4 "	R4133581	R4133582	R4166923	NR	-	-	-	-
-	1-1/4 "	R4133581	R4133582	R4166923	NR	-	-	-	-
-	1-1/4 "	R4133581	R4133582	R4166923	NR	-	-	-	-
-	1-1/4 "	R4133581	R4133582	R4166923	NR	-	-	-	-
-	1-1/4 "	R4133581	R4133582	R4166923	NR	-	-	-	-
-	1-1/4 "	R4133581	R4133582	R4166923	NR	-	-	-	-
-	1-1/4 "	R4133581	R4133582	R4166923	NR	-	-	-	-
-	1-1/2 "	R4133580	R4133580	Discontinued	NR	-	-	-	-
-	1-1/2 "	R4133580	R4133580	Discontinued	NR	-	-	-	-
-	1-1/2 "	R4133580	R4133580	Discontinued	NR	-	-	-	-
-	1-1/2 "	R4133580	R4133580	Discontinued	NR	-	-	-	-
-	1-1/2 "	R4133580	R4133580	Discontinued	NR	-	-	-	-
-	1-1/2 "	R4133580	R4133580	Discontinued	NR	-	-	-	-
-	1-5/8 "	R4133338	R4133338	R4166689	NR	-	-	-	-
-	1-5/8 "	R4133338	R4133338	R4166689	NR	-	-	-	-
-	1-5/8 "	R4133338	R4133338	R4166689	NR	-	-	-	-
-	1-5/8 "	R4133338	R4133338	R4166689	NR	-	-	-	-

MAKE MODEL YEAR AXLE CODE AXLE WEIGHT	AXLE & BRK. TYPE	BRK. MFG.	BRAKE SIZE	FMSI	MERITOR DISC PAD OR BRAKE SHOE	MERITOR GUIDE PIN OR RETURN SPRING KIT	MERITOR CALIPER HWD. KIT OR RETURN SPRING KIT	MERITOR ADJUSTER KIT (LEFT WHEEL)	MERITOR ADJUSTER KIT (RIGHT WHEEL)
ITE(Cont.)									
170, 1700, 1710, 1723, 1724, 1750, 1753, 1754 SERIES CONVENTIONAL CAB, SCHOOL BUS, TILT CAB(Cont.)									
1971 S1724, S1754 Conventional RA39, 199	Ra	WG	15 " x 7 "	4597 - 383	R700383	R40H597	R40H9200	R40H3540	R40H3541
	Rm	WG	15 " x 7 "	4597 - 383	R700383	R40H597	R40H9200	R40H3518	R404148
S1724, S1754 Conventional RA44, 186	Ra	WG	15 " x 7 "	4597 - 383	R700383	R40H597	R40H9200	NLA	NLA
	Rm	WG	15 " x 7 "	4597 - 383	R700383	R40H597	R40H9200	R40H3518	R404148
S1724, S1754 Conventional RA47, 57	Ra	WG	16 " x 6 "	1255 - 386	N/A	R40H597	R40H9200	NLA	NLA
	Rm	WG	16 " x 6 "	1255 - 386	N/A	R40H597	R40H9200	R404149	R404150
1970 C1710, C1750 Cargostar Tilt Cab FA109, 208	Fa	WG	15 " x 3 "	1245C - 321	R700321	R40H521	R40H9237	R40H3502	R40H3503
	Fm	WG	15 " x 3 "	1245A - 235	R700235	R40H521	R40H9201	R40H3524	R40H3524
C1710, C1750 Cargostar Tilt Cab FA118, 127, 139	Fa	WG	15 " x 5 "	1345A - 491	N/A	R40H521	R40H9237	R40H3502	R40H3503
	Fm	WG	15 " x 5 "	1345 - 490	N/A	R40H521	R40H9201	R40H3524	R40H3524
C1710, C1750 Cargostar Tilt Cab FA208	Fa	WG	15 " x 3-1/2 "	1280B - 322	R464004	R40H521	R40H9237	R40H3502	R40H3503
	Fm	WG	15 " x 3-1/2 "	1280 - 463	R700463	R40H521	R40H9201	R40H3524	R40H3524
C1710, C1750 Cargostar Tilt Cab FA48, 68, 70, 72	Fa	WG	14 " x 2-1/2 "	1294A - 325	N/A	R40H521	R40H9237	R40H3502	R40H3503
	Fm	WG	14 " x 2-1/2 "	1294 - 296	N/A	R40H521	R40H9201	R40H3524	R40H3524
C1710, C1750 Cargostar Tilt Cab FA71, 73, 101	Fa	WG	15 " x 3 "	1245C - 321	R700321	R40H521	R40H9237	R40H3502	R40H3503
	Fa	WG	15 " x 3-1/2 "	1280B - 322	R464004	R40H521	R40H9237	R40H3502	R40H3503
	Fm	WG	15 " x 3 "	1245A - 235	R700235	R40H521	R40H9201	R40H3524	R40H3524
	Fm	WG	15 " x 3-1/2 "	1280 - 463	R700463	R40H521	R40H9201	R40H3524	R40H3524
C1710, C1750 Cargostar Tilt Cab FA74	Fa	WG	15 " x 3 "	1245C - 321	R700321	R40H521	R40H9237	R40H3502	R40H3503
	Fm	WG	15 " x 3 "	1245A - 235	R700235	R40H521	R40H9201	R40H3524	R40H3524
C1710, C1750 Cargostar Tilt Cab FA78, 81	Fa	WG	15 " x 3 "	1245C - 321	R700321	R40H521	R40H9237	R40H3502	R40H3503
C1710, C1750 Cargostar Tilt Cab FA89, 91, 98	Fa	WG	15 " x 3 "	1245C - 321	R700321	R40H521	R40H9237	R40H3502	R40H3503
	Fm	WG	15 " x 3 "	1245A - 235	R700235	R40H521	R40H9201	R40H3524	R40H3524
C1710, C1750 Cargostar Tilt Cab RA184	Ra	WG	15 " x 4 "	4645A - 376	Discontinued	R40H597	R40H9200	R40H3540	R40H3541
	Rm	WG	15 " x 4 "	4645A - 376	Discontinued	R40H597	R40H9200	R40H3518	R404148
C1710, C1750 Cargostar Tilt Cab RA25, 184	Ra	WG	15 " x 5 "	1252 - 346	R700346	R40H597	R40H9200	R40H3540	R40H3541
	Rm	WG	15 " x 5 "	1252 - 346	R700346	R40H597	R40H9200	R40H3518	R404148
C1710, C1750 Cargostar Tilt Cab RA29, 30, 187	Ra	WG	15 " x 5 "	1252 - 346	R700346	R40H597	R40H9200	R40H3540	R40H3541
	Rm	WG	15 " x 5 "	1252 - 346	R700346	R40H597	R40H9200	R40H3518	R404148
C1710, C1750 Cargostar Tilt Cab RA30, 187	Ra	WG	16 " x 5 "	1254 - 385	N/A	R40H597	R40H9200	NLA	NLA
	Rm	WG	16 " x 5 "	1254 - 385	N/A	R40H597	R40H9200	R404149	R404150
C1710, C1750 Cargostar Tilt Cab RA30, 39, 44, 186, 189	Ra	WG	15 " x 6 "	4596 - 381	R700381	R40H597	R40H9200	R40H3540	R40H3541

MERITOR DRUM OR ROTOR NO.	CALIPER OR CYLINDER BORE SIZE	MERITOR CALIPER OR WHEEL CYLINDER (LEFT)	MERITOR CALIPER OR WHEEL CYLINDER (RIGHT)	MERITOR CALIPER OR WHEEL CYLINDER REPAIR KIT	MERITOR CALIPER PISTON	MERITOR MASTER CYLINDER	MERITOR MASTER CYLINDER KIT	MERITOR BRAKE HOSE (LEFT)	MERITOR BRAKE HOSE (RIGHT)
									ITE(Cont.)
170, 1700, 1710, 1723, 1724, 1750, 1753, 1754 SERIES CONVENTIONAL CAB, SCHOOL BUS, TILT CAB(Cont.)									
-	1-5/8 "	R4133338	R4133338	R4166689	NR	-	-	-	-
-	1-5/8 "	R4133338	R4133338	R4166689	NR	-	-	-	-
-	1-5/8 "	R4133338	R4133338	R4166689	NR	-	-	-	-
-	1-5/8 "	R4133338	R4133338	R4166689	NR	-	-	-	-
-	1-3/4 "	R4133400	R4133400	R4166917	NR	-	-	-	-
-	1-3/4 "	R4133400	R4133400	R4166917	NR	-	-	-	-
-	1-1/4 "	R4133581	R4133582	R4166923	NR	-	-	-	-
-	1-1/4 "	R4133581	R4133582	R4166923	NR	-	-	-	-
-		-	-	-	-	-	-	-	-
-		-	-	-	-	-	-	-	-
-	1-1/4 "	R4133581	R4133582	R4166923	NR	-	-	-	-
-	1-1/4 "	R4133581	R4133582	R4166923	NR	-	-	-	-
-	1-1/8 "	R4133714	R4133715	R4166926	NR	-	-	-	-
-	1-1/8 "	R4133714	R4133715	R4166926	NR	-	-	-	-
-	1-1/4 "	R4133581	R4133582	R4166923	NR	-	-	-	-
-	1-1/4 "	R4133581	R4133582	R4166923	NR	-	-	-	-
-	1-1/4 "	R4133581	R4133582	R4166923	NR	-	-	-	-
-	1-1/4 "	R4133581	R4133582	R4166923	NR	-	-	-	-
-	1-1/4 "	R4133581	R4133582	R4166923	NR	-	-	-	-
-	1-1/4 "	R4133581	R4133582	R4166923	NR	-	-	-	-
-	1-1/4 "	R4133581	R4133582	R4166923	NR	-	-	-	-
-	1-1/4 "	R4133581	R4133582	R4166923	NR	-	-	-	-
-	1-1/4 "	R4133581	R4133582	R4166923	NR	-	-	-	-
-	1-1/2 "	R4133580	R4133580	Discontinued	NR	-	-	-	-
-	1-1/2 "	R4133580	R4133580	Discontinued	NR	-	-	-	-
-	1-1/2 "	R4133580	R4133580	Discontinued	NR	-	-	-	-
-	1-1/2 "	R4133580	R4133580	Discontinued	NR	-	-	-	-
-	1-1/2 "	R4133580	R4133580	Discontinued	NR	-	-	-	-
-	1-1/2 "	R4133580	R4133580	Discontinued	NR	-	-	-	-
-	1-5/8 "	R4133338	R4133338	R4166689	NR	-	-	-	-
-	1-5/8 "	R4133338	R4133338	R4166689	NR	-	-	-	-
-	1-5/8 "	R4133338	R4133338	R4166689	NR	-	-	-	-

MAKE MODEL YEAR AXLE CODE AXLE WEIGHT	AXLE & BRK. TYPE	BRK. MFG.	BRAKE SIZE	FMSI	MERITOR DISC PAD OR BRAKE SHOE	MERITOR GUIDE PIN OR RETURN SPRING KIT	MERITOR CALIPER HWD. KIT OR RETURN SPRING KIT	MERITOR ADJUSTER KIT (LEFT WHEEL)	MERITOR ADJUSTER KIT (RIGHT WHEEL)
ITE(Cont.)									
170, 1700, 1710, 1723, 1724, 1750, 1753, 1754 SERIES CONVENTIONAL CAB, SCHOOL BUS, TILT CAB(Cont.)									
1970	Rm	WG	15 " x 6 "	4596 - 381	R700381	R40H597	R40H9200	R40H3518	R404148
C1710, C1750 Cargostar Tilt Cab RA39, 199	Ra	WG	15 " x 7 "	4597 - 383	R700383	R40H597	R40H9200	R40H3540	R40H3541
	Rm	WG	15 " x 7 "	4597 - 383	R700383	R40H597	R40H9200	R40H3518	R404148
C1710, C1750 Cargostar Tilt Cab RA44, 186	Ra	WG	15 " x 7 "	4597 - 383	R700383	R40H597	R40H9200	NLA	NLA
	Rm	WG	15 " x 7 "	4597 - 383	R700383	R40H597	R40H9200	R40H3518	R404148
C1710, C1750 Cargostar Tilt Cab RA47, 57	Ra	WG	16 " x 6 "	1255 - 386	N/A	R40H597	R40H9200	NLA	NLA
	Rm	WG	16 " x 6 "	1255 - 386	N/A	R40H597	R40H9200	R404149	R404150
S1723, S1753 School Bus FA109, 208	Fa	WG	15 " x 3 "	1245C - 321	R700321	R40H521	R40H9237	R40H3502	R40H3503
	Fm	WG	15 " x 3 "	1245A - 235	R700235	R40H521	R40H9201	R40H3524	R40H3524
S1723, S1753 School Bus FA118, 127, 139	Fa	WG	15 " x 5 "	1345A - 491	N/A	R40H521	R40H9237	R40H3502	R40H3503
	Fm	WG	15 " x 5 "	1345 - 490	N/A	R40H521	R40H9201	R40H3524	R40H3524
S1723, S1753 School Bus FA208	Fa	WG	15 " x 3-1/2 "	1280B - 322	R464004	R40H521	R40H9237	R40H3502	R40H3503
	Fm	WG	15 " x 3-1/2 "	1280 - 463	R700463	R40H521	R40H9201	R40H3524	R40H3524
S1723, S1753 School Bus FA48, 68, 70, 72	Fa	WG	14 " x 2-1/2 "	1294A - 325	N/A	R40H521	R40H9237	R40H3502	R40H3503
	Fm	WG	14 " x 2-1/2 "	1294 - 296	N/A	R40H521	R40H9201	R40H3524	R40H3524
S1723, S1753 School Bus FA71, 73, 101	Fa	WG	15 " x 3 "	1245C - 321	R700321	R40H521	R40H9237	R40H3502	R40H3503
	Fa	WG	15 " x 3-1/2 "	1280B - 322	R464004	R40H521	R40H9237	R40H3502	R40H3503
	Fm	WG	15 " x 3 "	1245A - 235	R700235	R40H521	R40H9201	R40H3524	R40H3524
	Fm	WG	15 " x 3-1/2 "	1280 - 463	R700463	R40H521	R40H9201	R40H3524	R40H3524
S1723, S1753 School Bus FA74	Fa	WG	15 " x 3 "	1245C - 321	R700321	R40H521	R40H9237	R40H3502	R40H3503
	Fm	WG	15 " x 3 "	1245A - 235	R700235	R40H521	R40H9201	R40H3524	R40H3524
S1723, S1753 School Bus FA78, 81	Fa	WG	15 " x 3 "	1245C - 321	R700321	R40H521	R40H9237	R40H3502	R40H3503
S1723, S1753 School Bus FA89, 91, 98	Fa	WG	15 " x 3 "	1245C - 321	R700321	R40H521	R40H9237	R40H3502	R40H3503
	Fm	WG	15 " x 3 "	1245A - 235	R700235	R40H521	R40H9201	R40H3524	R40H3524
S1723, S1753 School Bus RA184	Ra	WG	15 " x 4 "	4645A - 376	Discontinued	R40H597	R40H9200	R40H3540	R40H3541
	Rm	WG	15 " x 4 "	4645A - 376	Discontinued	R40H597	R40H9200	R40H3518	R404148
S1723, S1753 School Bus RA25, 184	Ra	WG	15 " x 5 "	1252 - 346	R700346	R40H597	R40H9200	R40H3540	R40H3541
	Rm	WG	15 " x 5 "	1252 - 346	R700346	R40H597	R40H9200	R40H3518	R404148
S1723, S1753 School Bus RA29, 30, 187	Ra	WG	15 " x 5 "	1252 - 346	R700346	R40H597	R40H9200	R40H3540	R40H3541
	Rm	WG	15 " x 5 "	1252 - 346	R700346	R40H597	R40H9200	R40H3518	R404148
S1723, S1753 School Bus RA30, 187	Ra	WG	16 " x 5 "	1254 - 385	N/A	R40H597	R40H9200	NLA	NLA
	Rm	WG	16 " x 5 "	1254 - 385	N/A	R40H597	R40H9200	R404149	R404150
S1723, S1753 School Bus RA30, 39, 44, 186, 189	Ra	WG	15 " x 6 "	4596 - 381	R700381	R40H597	R40H9200	R40H3540	R40H3541
	Rm	WG	15 " x 6 "	4596 - 381	R700381	R40H597	R40H9200	R40H3518	R404148
S1723, S1753 School Bus RA39, 199	Ra	WG	15 " x 7 "	4597 - 383	R700383	R40H597	R40H9200	R40H3540	R40H3541
	Rm	WG	15 " x 7 "	4597 - 383	R700383	R40H597	R40H9200	R40H3518	R404148
S1723, S1753 School Bus RA44, 186	Ra	WG	15 " x 7 "	4597 - 383	R700383	R40H597	R40H9200	NLA	NLA
	Rm	WG	15 " x 7 "	4597 - 383	R700383	R40H597	R40H9200	R40H3518	R404148
S1723, S1753 School Bus RA47, 57	Ra	WG	16 " x 6 "	1255 - 386	N/A	R40H597	R40H9200	NLA	NLA

MERITOR DRUM OR ROTOR NO.	CALIPER OR CYLINDER BORE SIZE	MERITOR CALIPER OR WHEEL CYLINDER (LEFT)	MERITOR CALIPER OR WHEEL CYLINDER (RIGHT)	MERITOR CALIPER OR WHEEL CYLINDER REPAIR KIT	MERITOR CALIPER PISTON	MERITOR MASTER CYLINDER	MERITOR MASTER CYLINDER KIT	MERITOR BRAKE HOSE (LEFT)	MERITOR BRAKE HOSE (RIGHT)
									ITE(Cont.)
170, 1700, 1710, 1723, 1724, 1750, 1753, 1754 SERIES CONVENTIONAL CAB, SCHOOL BUS, TILT CAB(Cont.)									
-	1-5/8 "	R4133338	R4133338	R4166689	NR	-	-	-	-
-	1-5/8 "	R4133338	R4133338	R4166689	NR	-	-	-	-
-	1-5/8 "	R4133338	R4133338	R4166689	NR	-	-	-	-
-	1-5/8 "	R4133338	R4133338	R4166689	NR	-	-	-	-
-	1-5/8 "	R4133338	R4133338	R4166689	NR	-	-	-	-
-	1-3/4 "	R4133400	R4133400	R4166917	NR	-	-	-	-
-	1-3/4 "	R4133400	R4133400	R4166917	NR	-	-	-	-
-	1-1/4 "	R4133581	R4133582	R4166923	NR	-	-	-	-
-	1-1/4 "	R4133581	R4133582	R4166923	NR	-	-	-	-
-		-	-	-	-	-	-	-	-
-		-	-	-	-	-	-	-	-
-	1-1/4 "	R4133581	R4133582	R4166923	NR	-	-	-	-
-	1-1/4 "	R4133581	R4133582	R4166923	NR	-	-	-	-
-	1-1/8 "	R4133714	R4133715	R4166926	NR	-	-	-	-
-	1-1/8 "	R4133714	R4133715	R4166926	NR	-	-	-	-
-	1-1/4 "	R4133581	R4133582	R4166923	NR	-	-	-	-
-	1-1/4 "	R4133581	R4133582	R4166923	NR	-	-	-	-
-	1-1/4 "	R4133581	R4133582	R4166923	NR	-	-	-	-
-	1-1/4 "	R4133581	R4133582	R4166923	NR	-	-	-	-
-	1-1/4 "	R4133581	R4133582	R4166923	NR	-	-	-	-
-	1-1/4 "	R4133581	R4133582	R4166923	NR	-	-	-	-
-	1-1/4 "	R4133581	R4133582	R4166923	NR	-	-	-	-
-	1-1/4 "	R4133581	R4133582	R4166923	NR	-	-	-	-
-	1-1/2 "	R4133580	R4133580	Discontinued	NR	-	-	-	-
-	1-1/2 "	R4133580	R4133580	Discontinued	NR	-	-	-	-
-	1-1/2 "	R4133580	R4133580	Discontinued	NR	-	-	-	-
-	1-1/2 "	R4133580	R4133580	Discontinued	NR	-	-	-	-
-	1-1/2 "	R4133580	R4133580	Discontinued	NR	-	-	-	-
-	1-1/2 "	R4133580	R4133580	Discontinued	NR	-	-	-	-
-	1-5/8 "	R4133338	R4133338	R4166689	NR	-	-	-	-
-	1-5/8 "	R4133338	R4133338	R4166689	NR	-	-	-	-
-	1-5/8 "	R4133338	R4133338	R4166689	NR	-	-	-	-
-	1-5/8 "	R4133338	R4133338	R4166689	NR	-	-	-	-
-	1-5/8 "	R4133338	R4133338	R4166689	NR	-	-	-	-
-	1-5/8 "	R4133338	R4133338	R4166689	NR	-	-	-	-
-	1-5/8 "	R4133338	R4133338	R4166689	NR	-	-	-	-
-	1-3/4 "	R4133400	R4133400	R4166917	NR	-	-	-	-

MAKE MODEL YEAR AXLE CODE AXLE WEIGHT	AXLE & BRK. TYPE	BRK. MFG.	BRAKE SIZE	FMSI	MERITOR DISC PAD OR BRAKE SHOE	MERITOR GUIDE PIN OR RETURN SPRING KIT	MERITOR CALIPER HWD. KIT OR RETURN SPRING KIT	MERITOR ADJUSTER KIT (LEFT WHEEL)	MERITOR ADJUSTER KIT (RIGHT WHEEL)
ITE(Cont.)									
170, 1700, 1710, 1723, 1724, 1750, 1753, 1754 SERIES CONVENTIONAL CAB, SCHOOL BUS, TILT CAB(Cont.)									
1970 S1723, S1753 School Bus RA47, 57	Rm	WG	16 " x 6 "	1255 - 386	N/A	R40H597	R40H9200	R404149	R404150
S1724, S1754 Conventional FA109, 208	Fa	WG	15 " x 3 "	1245C - 321	R700321	R40H521	R40H9237	R40H3502	R40H3503
	Fm	WG	15 " x 3 "	1245A - 235	R700235	R40H521	R40H9201	R40H3524	R40H3524
S1724, S1754 Conventional FA118, 127, 139	Fa	WG	15 " x 5 "	1345A - 491	N/A	R40H521	R40H9237	R40H3502	R40H3503
	Fm	WG	15 " x 5 "	1345 - 490	N/A	R40H521	R40H9201	R40H3524	R40H3524
S1724, S1754 Conventional FA208	Fa	WG	15 " x 3-1/2 "	1280B - 322	R464004	R40H521	R40H9237	R40H3502	R40H3503
	Fm	WG	15 " x 3-1/2 "	1280 - 463	R700463	R40H521	R40H9201	R40H3524	R40H3524
S1724, S1754 Conventional FA48, 68, 70, 72	Fa	WG	14 " x 2-1/2 "	1294A - 325	N/A	R40H521	R40H9237	R40H3502	R40H3503
	Fm	WG	14 " x 2-1/2 "	1294 - 296	N/A	R40H521	R40H9201	R40H3524	R40H3524
S1724, S1754 Conventional FA71, 73, 101	Fa	WG	15 " x 3 "	1245C - 321	R700321	R40H521	R40H9237	R40H3502	R40H3503
	Fa	WG	15 " x 3-1/2 "	1280B - 322	R464004	R40H521	R40H9237	R40H3502	R40H3503
	Fm	WG	15 " x 3 "	1245A - 235	R700235	R40H521	R40H9201	R40H3524	R40H3524
	Fm	WG	15 " x 3-1/2 "	1280 - 463	R700463	R40H521	R40H9201	R40H3524	R40H3524
S1724, S1754 Conventional FA74	Fa	WG	15 " x 3 "	1245C - 321	R700321	R40H521	R40H9237	R40H3502	R40H3503
	Fm	WG	15 " x 3 "	1245A - 235	R700235	R40H521	R40H9201	R40H3524	R40H3524
S1724, S1754 Conventional FA78, 81	Fa	WG	15 " x 3 "	1245C - 321	R700321	R40H521	R40H9237	R40H3502	R40H3503
S1724, S1754 Conventional FA89, 91, 98	Fa	WG	15 " x 3 "	1245C - 321	R700321	R40H521	R40H9237	R40H3502	R40H3503
	Fm	WG	15 " x 3 "	1245A - 235	R700235	R40H521	R40H9201	R40H3524	R40H3524
S1724, S1754 Conventional RA184	Ra	WG	15 " x 4 "	4645A - 376	Discontinued	R40H597	R40H9200	R40H3540	R40H3541
	Rm	WG	15 " x 4 "	4645A - 376	Discontinued	R40H597	R40H9200	R40H3518	R404148
S1724, S1754 Conventional RA25, 184	Ra	WG	15 " x 5 "	1252 - 346	R700346	R40H597	R40H9200	R40H3540	R40H3541
	Rm	WG	15 " x 5 "	1252 - 346	R700346	R40H597	R40H9200	R40H3518	R404148
S1724, S1754 Conventional RA29, 30, 187	Ra	WG	15 " x 5 "	1252 - 346	R700346	R40H597	R40H9200	R40H3540	R40H3541
	Rm	WG	15 " x 5 "	1252 - 346	R700346	R40H597	R40H9200	R40H3518	R404148
S1724, S1754 Conventional RA30, 187	Ra	WG	16 " x 5 "	1254 - 385	N/A	R40H597	R40H9200	NLA	NLA
	Rm	WG	16 " x 5 "	1254 - 385	N/A	R40H597	R40H9200	R404149	R404150
S1724, S1754 Conventional RA30, 39, 44, 186, 189	Ra	WG	15 " x 6 "	4596 - 381	R700381	R40H597	R40H9200	R40H3540	R40H3541
	Rm	WG	15 " x 6 "	4596 - 381	R700381	R40H597	R40H9200	R40H3518	R404148
S1724, S1754 Conventional RA39, 199	Ra	WG	15 " x 7 "	4597 - 383	R700383	R40H597	R40H9200	R40H3540	R40H3541
	Rm	WG	15 " x 7 "	4597 - 383	R700383	R40H597	R40H9200	R40H3518	R404148
S1724, S1754 Conventional RA44, 186	Ra	WG	15 " x 7 "	4597 - 383	R700383	R40H597	R40H9200	NLA	NLA
	Rm	WG	15 " x 7 "	4597 - 383	R700383	R40H597	R40H9200	R40H3518	R404148
S1724, S1754 Conventional RA47, 57	Ra	WG	16 " x 6 "	1255 - 386	N/A	R40H597	R40H9200	NLA	NLA
	Rm	WG	16 " x 6 "	1255 - 386	N/A	R40H597	R40H9200	R404149	R404150
1969 C1710, C1750 Cargostar Tilt Cab FA109, 208	Fa	WG	15 " x 3 "	1245C - 321	R700321	R40H521	R40H9237	R40H3502	R40H3503
	Fm	WG	15 " x 3 "	1245A - 235	R700235	R40H521	R40H9201	R40H3524	R40H3524
C1710, C1750 Cargostar Tilt Cab FA118, 127, 139	Fa	WG	15 " x 5 "	1345A - 491	N/A	R40H521	R40H9237	R40H3502	R40H3503
	Fm	WG	15 " x 5 "	1345 - 490	N/A	R40H521	R40H9201	R40H3524	R40H3524
C1710, C1750 Cargostar Tilt Cab FA208	Fa	WG	15 " x 3-1/2 "	1280B - 322	R464004	R40H521	R40H9237	R40H3502	R40H3503

MERITOR DRUM OR ROTOR NO.	CALIPER OR CYLINDER BORE SIZE	MERITOR CALIPER OR WHEEL CYLINDER (LEFT)	MERITOR CALIPER OR WHEEL CYLINDER (RIGHT)	MERITOR CALIPER OR WHEEL CYLINDER REPAIR KIT	MERITOR CALIPER PISTON	MERITOR MASTER CYLINDER	MERITOR MASTER CYLINDER KIT	MERITOR BRAKE HOSE (LEFT)	MERITOR BRAKE HOSE (RIGHT)
									ITE(Cont.)
170, 1700, 1710, 1723, 1724, 1750, 1753, 1754 SERIES CONVENTIONAL CAB, SCHOOL BUS, TILT CAB(Cont.)									
-	1-3/4 "	R4133400	R4133400	R4166917	NR	-	-	-	-
-	1-1/4 "	R4133581	R4133582	R4166923	NR	-	-	-	-
-	1-1/4 "	R4133581	R4133582	R4166923	NR	-	-	-	-
-		-	-	-	-	-	-	-	-
-		-	-	-	-	-	-	-	-
-	1-1/4 "	R4133581	R4133582	R4166923	NR	-	-	-	-
-	1-1/4 "	R4133581	R4133582	R4166923	NR	-	-	-	-
-	1-1/8 "	R4133714	R4133715	R4166926	NR	-	-	-	-
-	1-1/8 "	R4133714	R4133715	R4166926	NR	-	-	-	-
-	1-1/4 "	R4133581	R4133582	R4166923	NR	-	-	-	-
-	1-1/4 "	R4133581	R4133582	R4166923	NR	-	-	-	-
-	1-1/4 "	R4133581	R4133582	R4166923	NR	-	-	-	-
-	1-1/4 "	R4133581	R4133582	R4166923	NR	-	-	-	-
-	1-1/4 "	R4133581	R4133582	R4166923	NR	-	-	-	-
-	1-1/4 "	R4133581	R4133582	R4166923	NR	-	-	-	-
-	1-1/4 "	R4133581	R4133582	R4166923	NR	-	-	-	-
-	1-1/4 "	R4133581	R4133582	R4166923	NR	-	-	-	-
-	1-1/4 "	R4133581	R4133582	R4166923	NR	-	-	-	-
-	1-1/2 "	R4133580	R4133580	Discontinued	NR	-	-	-	-
-	1-1/2 "	R4133580	R4133580	Discontinued	NR	-	-	-	-
-	1-1/2 "	R4133580	R4133580	Discontinued	NR	-	-	-	-
-	1-1/2 "	R4133580	R4133580	Discontinued	NR	-	-	-	-
-	1-1/2 "	R4133580	R4133580	Discontinued	NR	-	-	-	-
-	1-1/2 "	R4133580	R4133580	Discontinued	NR	-	-	-	-
-	1-5/8 "	R4133338	R4133338	R4166689	NR	-	-	-	-
-	1-5/8 "	R4133338	R4133338	R4166689	NR	-	-	-	-
-	1-5/8 "	R4133338	R4133338	R4166689	NR	-	-	-	-
-	1-5/8 "	R4133338	R4133338	R4166689	NR	-	-	-	-
-	1-5/8 "	R4133338	R4133338	R4166689	NR	-	-	-	-
-	1-5/8 "	R4133338	R4133338	R4166689	NR	-	-	-	-
-	1-5/8 "	R4133338	R4133338	R4166689	NR	-	-	-	-
-	1-5/8 "	R4133338	R4133338	R4166689	NR	-	-	-	-
-	1-3/4 "	R4133400	R4133400	R4166917	NR	-	-	-	-
-	1-3/4 "	R4133400	R4133400	R4166917	NR	-	-	-	-
-	1-1/4 "	R4133581	R4133582	R4166923	NR	-	-	-	-
-	1-1/4 "	R4133581	R4133582	R4166923	NR	-	-	-	-
-		-	-	-	-	-	-	-	-
-		-	-	-	-	-	-	-	-
-	1-1/4 "	R4133581	R4133582	R4166923	NR	-	-	-	-

MAKE MODEL YEAR AXLE CODE AXLE WEIGHT	AXLE & BRK. TYPE	BRK. MFG.	BRAKE SIZE	FMSI	MERITOR DISC PAD OR BRAKE SHOE	MERITOR GUIDE PIN OR RETURN SPRING KIT	MERITOR CALIPER HWD. KIT OR RETURN SPRING KIT	MERITOR ADJUSTER KIT (LEFT WHEEL)	MERITOR ADJUSTER KIT (RIGHT WHEEL)
ITE(Cont.)									
170, 1700, 1710, 1723, 1724, 1750, 1753, 1754 SERIES CONVENTIONAL CAB, SCHOOL BUS, TILT CAB(Cont.)									
1969	Fm	WG	15 " x 3-1/2 "	1280 - 463	R700463	R40H521	R40H9201	R40H3524	R40H3524
C1710, C1750 Cargostar Tilt Cab FA48, 68, 70, 72	Fa	WG	14 " x 2-1/2 "	1294A - 325	N/A	R40H521	R40H9237	R40H3502	R40H3503
	Fm	WG	14 " x 2-1/2 "	1294 - 296	N/A	R40H521	R40H9201	R40H3524	R40H3524
C1710, C1750 Cargostar Tilt Cab FA71, 73, 101	Fa	WG	15 " x 3 "	1245C - 321	R700321	R40H521	R40H9237	R40H3502	R40H3503
	Fa	WG	15 " x 3-1/2 "	1280B - 322	R464004	R40H521	R40H9237	R40H3502	R40H3503
	Fm	WG	15 " x 3 "	1245A - 235	R700235	R40H521	R40H9201	R40H3524	R40H3524
	Fm	WG	15 " x 3-1/2 "	1280 - 463	R700463	R40H521	R40H9201	R40H3524	R40H3524
C1710, C1750 Cargostar Tilt Cab FA74	Fa	WG	15 " x 3 "	1245C - 321	R700321	R40H521	R40H9237	R40H3502	R40H3503
	Fm	WG	15 " x 3 "	1245A - 235	R700235	R40H521	R40H9201	R40H3524	R40H3524
C1710, C1750 Cargostar Tilt Cab FA78, 81	Fa	WG	15 " x 3 "	1245C - 321	R700321	R40H521	R40H9237	R40H3502	R40H3503
C1710, C1750 Cargostar Tilt Cab FA89, 91, 98	Fa	WG	15 " x 3 "	1245C - 321	R700321	R40H521	R40H9237	R40H3502	R40H3503
	Fm	WG	15 " x 3 "	1245A - 235	R700235	R40H521	R40H9201	R40H3524	R40H3524
C1710, C1750 Cargostar Tilt Cab RA184	Ra	WG	15 " x 4 "	4645A - 376	Discontinued	R40H597	R40H9200	R40H3540	R40H3541
	Rm	WG	15 " x 4 "	4645A - 376	Discontinued	R40H597	R40H9200	R40H3518	R404148
C1710, C1750 Cargostar Tilt Cab RA25, 184	Ra	WG	15 " x 5 "	1252 - 346	R700346	R40H597	R40H9200	R40H3540	R40H3541
	Rm	WG	15 " x 5 "	1252 - 346	R700346	R40H597	R40H9200	R40H3518	R404148
C1710, C1750 Cargostar Tilt Cab RA29, 30, 187	Ra	WG	15 " x 5 "	1252 - 346	R700346	R40H597	R40H9200	R40H3540	R40H3541
	Rm	WG	15 " x 5 "	1252 - 346	R700346	R40H597	R40H9200	R40H3518	R404148
C1710, C1750 Cargostar Tilt Cab RA30, 187	Ra	WG	16 " x 5 "	1254 - 385	N/A	R40H597	R40H9200	NLA	NLA
	Rm	WG	16 " x 5 "	1254 - 385	N/A	R40H597	R40H9200	R404149	R404150
C1710, C1750 Cargostar Tilt Cab RA30, 39, 44, 186, 189	Ra	WG	15 " x 6 "	4596 - 381	R700381	R40H597	R40H9200	R40H3540	R40H3541
	Rm	WG	15 " x 6 "	4596 - 381	R700381	R40H597	R40H9200	R40H3518	R404148
C1710, C1750 Cargostar Tilt Cab RA39, 199	Ra	WG	15 " x 7 "	4597 - 383	R700383	R40H597	R40H9200	R40H3540	R40H3541
	Rm	WG	15 " x 7 "	4597 - 383	R700383	R40H597	R40H9200	R40H3518	R404148
C1710, C1750 Cargostar Tilt Cab RA44, 186	Ra	WG	15 " x 7 "	4597 - 383	R700383	R40H597	R40H9200	NLA	NLA
	Rm	WG	15 " x 7 "	4597 - 383	R700383	R40H597	R40H9200	R40H3518	R404148
C1710, C1750 Cargostar Tilt Cab RA47, 57	Ra	WG	16 " x 6 "	1255 - 386	N/A	R40H597	R40H9200	NLA	NLA
	Rm	WG	16 " x 6 "	1255 - 386	N/A	R40H597	R40H9200	R404149	R404150
S1723, S1753 School Bus FA109, 208	Fa	WG	15 " x 3 "	1245C - 321	R700321	R40H521	R40H9237	R40H3502	R40H3503
	Fm	WG	15 " x 3 "	1245A - 235	R700235	R40H521	R40H9201	R40H3524	R40H3524
S1723, S1753 School Bus FA118, 127, 139	Fa	WG	15 " x 5 "	1345A - 491	N/A	R40H521	R40H9237	R40H3502	R40H3503
	Fm	WG	15 " x 5 "	1345 - 490	N/A	R40H521	R40H9201	R40H3524	R40H3524
S1723, S1753 School Bus FA208	Fa	WG	15 " x 3-1/2 "	1280B - 322	R464004	R40H521	R40H9237	R40H3502	R40H3503

MERITOR DRUM OR ROTOR NO.	CALIPER OR CYLINDER BORE SIZE	MERITOR CALIPER OR WHEEL CYLINDER (LEFT)	MERITOR CALIPER OR WHEEL CYLINDER (RIGHT)	MERITOR CALIPER OR WHEEL CYLINDER REPAIR KIT	MERITOR CALIPER PISTON	MERITOR MASTER CYLINDER	MERITOR MASTER CYLINDER KIT	MERITOR BRAKE HOSE (LEFT)	MERITOR BRAKE HOSE (RIGHT)
									ITE(Cont.)
170, 1700, 1710, 1723, 1724, 1750, 1753, 1754 SERIES CONVENTIONAL CAB, SCHOOL BUS, TILT CAB(Cont.)									
-	1-1/4 "	R4133581	R4133582	R4166923	NR	-	-	-	-
-	1-1/8 "	R4133714	R4133715	R4166926	NR	-	-	-	-
-	1-1/8 "	R4133714	R4133715	R4166926	NR	-	-	-	-
-	1-1/4 "	R4133581	R4133582	R4166923	NR	-	-	-	-
-	1-1/4 "	R4133581	R4133582	R4166923	NR	-	-	-	-
-	1-1/4 "	R4133581	R4133582	R4166923	NR	-	-	-	-
-	1-1/4 "	R4133581	R4133582	R4166923	NR	-	-	-	-
-	1-1/4 "	R4133581	R4133582	R4166923	NR	-	-	-	-
-	1-1/4 "	R4133581	R4133582	R4166923	NR	-	-	-	-
-	1-1/4 "	R4133581	R4133582	R4166923	NR	-	-	-	-
-	1-1/4 "	R4133581	R4133582	R4166923	NR	-	-	-	-
-	1-1/4 "	R4133581	R4133582	R4166923	NR	-	-	-	-
-	1-1/2 "	R4133580	R4133580	Discontinued	NR	-	-	-	-
-	1-1/2 "	R4133580	R4133580	Discontinued	NR	-	-	-	-
-	1-1/2 "	R4133580	R4133580	Discontinued	NR	-	-	-	-
-	1-1/2 "	R4133580	R4133580	Discontinued	NR	-	-	-	-
-	1-1/2 "	R4133580	R4133580	Discontinued	NR	-	-	-	-
-	1-1/2 "	R4133580	R4133580	Discontinued	NR	-	-	-	-
-	1-5/8 "	R4133338	R4133338	R4166689	NR	-	-	-	-
-	1-5/8 "	R4133338	R4133338	R4166689	NR	-	-	-	-
-	1-5/8 "	R4133338	R4133338	R4166689	NR	-	-	-	-
-	1-5/8 "	R4133338	R4133338	R4166689	NR	-	-	-	-
-	1-5/8 "	R4133338	R4133338	R4166689	NR	-	-	-	-
-	1-5/8 "	R4133338	R4133338	R4166689	NR	-	-	-	-
-	1-5/8 "	R4133338	R4133338	R4166689	NR	-	-	-	-
-	1-5/8 "	R4133338	R4133338	R4166689	NR	-	-	-	-
-	1-3/4 "	R4133400	R4133400	R4166917	NR	-	-	-	-
-	1-3/4 "	R4133400	R4133400	R4166917	NR	-	-	-	-
-	1-1/4 "	R4133581	R4133582	R4166923	NR	-	-	-	-
-	1-1/4 "	R4133581	R4133582	R4166923	NR	-	-	-	-
-		-	-	-	-	-	-	-	-
-		-	-	-	-	-	-	-	-
-	1-1/4 "	R4133581	R4133582	R4166923	NR	-	-	-	-

MAKE MODEL YEAR AXLE CODE AXLE WEIGHT	AXLE & BRK. TYPE	BRK. MFG.	BRAKE SIZE	FMSI	MERITOR DISC PAD OR BRAKE SHOE	MERITOR GUIDE PIN OR RETURN SPRING KIT	MERITOR CALIPER HWD. KIT OR RETURN SPRING KIT	MERITOR ADJUSTER KIT (LEFT WHEEL)	MERITOR ADJUSTER KIT (RIGHT WHEEL)
ITE(Cont.)									
170, 1700, 1710, 1723, 1724, 1750, 1753, 1754 SERIES CONVENTIONAL CAB, SCHOOL BUS, TILT CAB(Cont.)									
1969	Fm	WG	15 " x 3-1/2 "	1280 - 463	R700463	R40H521	R40H9201	R40H3524	R40H3524
S1723, S1753 School Bus FA48, 68, 70, 72	Fa	WG	14 " x 2-1/2 "	1294A - 325	N/A	R40H521	R40H9237	R40H3502	R40H3503
	Fm	WG	14 " x 2-1/2 "	1294 - 296	N/A	R40H521	R40H9201	R40H3524	R40H3524
S1723, S1753 School Bus FA71, 73, 101	Fa	WG	15 " x 3 "	1245C - 321	R700321	R40H521	R40H9237	R40H3502	R40H3503
	Fa	WG	15 " x 3-1/2 "	1280B - 322	R464004	R40H521	R40H9237	R40H3502	R40H3503
	Fm	WG	15 " x 3 "	1245A - 235	R700235	R40H521	R40H9201	R40H3524	R40H3524
	Fm	WG	15 " x 3-1/2 "	1280 - 463	R700463	R40H521	R40H9201	R40H3524	R40H3524
S1723, S1753 School Bus FA74	Fa	WG	15 " x 3 "	1245C - 321	R700321	R40H521	R40H9237	R40H3502	R40H3503
	Fm	WG	15 " x 3 "	1245A - 235	R700235	R40H521	R40H9201	R40H3524	R40H3524
S1723, S1753 School Bus FA78, 81	Fa	WG	15 " x 3 "	1245C - 321	R700321	R40H521	R40H9237	R40H3502	R40H3503
S1723, S1753 School Bus FA89, 91, 98	Fa	WG	15 " x 3 "	1245C - 321	R700321	R40H521	R40H9237	R40H3502	R40H3503
	Fm	WG	15 " x 3 "	1245A - 235	R700235	R40H521	R40H9201	R40H3524	R40H3524
S1723, S1753 School Bus RA184	Ra	WG	15 " x 4 "	4645A - 376	Discontinued	R40H597	R40H9200	R40H3540	R40H3541
	Rm	WG	15 " x 4 "	4645A - 376	Discontinued	R40H597	R40H9200	R40H3518	R404148
S1723, S1753 School Bus RA25, 184	Ra	WG	15 " x 5 "	1252 - 346	R700346	R40H597	R40H9200	R40H3540	R40H3541
	Rm	WG	15 " x 5 "	1252 - 346	R700346	R40H597	R40H9200	R40H3518	R404148
S1723, S1753 School Bus RA29, 30, 187	Ra	WG	15 " x 5 "	1252 - 346	R700346	R40H597	R40H9200	R40H3540	R40H3541
	Rm	WG	15 " x 5 "	1252 - 346	R700346	R40H597	R40H9200	R40H3518	R404148
S1723, S1753 School Bus RA30, 187	Ra	WG	16 " x 5 "	1254 - 385	N/A	R40H597	R40H9200	NLA	NLA
	Rm	WG	16 " x 5 "	1254 - 385	N/A	R40H597	R40H9200	R404149	R404150
S1723, S1753 School Bus RA30, 39, 44, 186, 189	Ra	WG	15 " x 6 "	4596 - 381	R700381	R40H597	R40H9200	R40H3540	R40H3541
	Rm	WG	15 " x 6 "	4596 - 381	R700381	R40H597	R40H9200	R40H3518	R404148
S1723, S1753 School Bus RA39, 199	Ra	WG	15 " x 7 "	4597 - 383	R700383	R40H597	R40H9200	R40H3540	R40H3541
	Rm	WG	15 " x 7 "	4597 - 383	R700383	R40H597	R40H9200	R40H3518	R404148
S1723, S1753 School Bus RA44, 186	Ra	WG	15 " x 7 "	4597 - 383	R700383	R40H597	R40H9200	NLA	NLA
	Rm	WG	15 " x 7 "	4597 - 383	R700383	R40H597	R40H9200	R40H3518	R404148
S1723, S1753 School Bus RA47, 57	Ra	WG	16 " x 6 "	1255 - 386	N/A	R40H597	R40H9200	NLA	NLA
	Rm	WG	16 " x 6 "	1255 - 386	N/A	R40H597	R40H9200	R404149	R404150
S1724, S1754 Conventional FA109, 208	Fa	WG	15 " x 3 "	1245C - 321	R700321	R40H521	R40H9237	R40H3502	R40H3503
	Fm	WG	15 " x 3 "	1245A - 235	R700235	R40H521	R40H9201	R40H3524	R40H3524
S1724, S1754 Conventional FA118, 127, 139	Fa	WG	15 " x 5 "	1345A - 491	N/A	R40H521	R40H9237	R40H3502	R40H3503
	Fm	WG	15 " x 5 "	1345 - 490	N/A	R40H521	R40H9201	R40H3524	R40H3524
S1724, S1754 Conventional FA208	Fa	WG	15 " x 3-1/2 "	1280B - 322	R464004	R40H521	R40H9237	R40H3502	R40H3503
	Fm	WG	15 " x 3-1/2 "	1280 - 463	R700463	R40H521	R40H9201	R40H3524	R40H3524
S1724, S1754 Conventional FA48, 68, 70, 72	Fa	WG	14 " x 2-1/2 "	1294A - 325	N/A	R40H521	R40H9237	R40H3502	R40H3503
	Fm	WG	14 " x 2-1/2 "	1294 - 296	N/A	R40H521	R40H9201	R40H3524	R40H3524
S1724, S1754 Conventional FA71, 73, 101	Fa	WG	15 " x 3 "	1245C - 321	R700321	R40H521	R40H9237	R40H3502	R40H3503
	Fa	WG	15 " x 3-1/2 "	1280B - 322	R464004	R40H521	R40H9237	R40H3502	R40H3503
	Fm	WG	15 " x 3 "	1245A - 235	R700235	R40H521	R40H9201	R40H3524	R40H3524
	Fm	WG	15 " x 3-1/2 "	1280 - 463	R700463	R40H521	R40H9201	R40H3524	R40H3524
S1724, S1754 Conventional FA74	Fa	WG	15 " x 3 "	1245C - 321	R700321	R40H521	R40H9237	R40H3502	R40H3503
	Fm	WG	15 " x 3 "	1245A - 235	R700235	R40H521	R40H9201	R40H3524	R40H3524

MERITOR DRUM OR ROTOR NO.	CALIPER OR CYLINDER BORE SIZE	MERITOR CALIPER OR WHEEL CYLINDER (LEFT)	MERITOR CALIPER OR WHEEL CYLINDER (RIGHT)	MERITOR CALIPER OR WHEEL CYLINDER REPAIR KIT	MERITOR CALIPER PISTON	MERITOR MASTER CYLINDER	MERITOR MASTER CYLINDER KIT	MERITOR BRAKE HOSE (LEFT)	MERITOR BRAKE HOSE (RIGHT)
									ITE(Cont.)
170, 1700, 1710, 1723, 1724, 1750, 1753, 1754 SERIES CONVENTIONAL CAB, SCHOOL BUS, TILT CAB(Cont.)									
-	1-1/4 "	R4133581	R4133582	R4166923	NR	-	-	-	-
-	1-1/8 "	R4133714	R4133715	R4166926	NR	-	-	-	-
-	1-1/8 "	R4133714	R4133715	R4166926	NR	-	-	-	-
-	1-1/4 "	R4133581	R4133582	R4166923	NR	-	-	-	-
-	1-1/4 "	R4133581	R4133582	R4166923	NR	-	-	-	-
-	1-1/4 "	R4133581	R4133582	R4166923	NR	-	-	-	-
-	1-1/4 "	R4133581	R4133582	R4166923	NR	-	-	-	-
-	1-1/4 "	R4133581	R4133582	R4166923	NR	-	-	-	-
-	1-1/4 "	R4133581	R4133582	R4166923	NR	-	-	-	-
-	1-1/4 "	R4133581	R4133582	R4166923	NR	-	-	-	-
-	1-1/4 "	R4133581	R4133582	R4166923	NR	-	-	-	-
-	1-1/4 "	R4133581	R4133582	R4166923	NR	-	-	-	-
-	1-1/2 "	R4133580	R4133580	Discontinued	NR	-	-	-	-
-	1-1/2 "	R4133580	R4133580	Discontinued	NR	-	-	-	-
-	1-1/2 "	R4133580	R4133580	Discontinued	NR	-	-	-	-
-	1-1/2 "	R4133580	R4133580	Discontinued	NR	-	-	-	-
-	1-1/2 "	R4133580	R4133580	Discontinued	NR	-	-	-	-
-	1-1/2 "	R4133580	R4133580	Discontinued	NR	-	-	-	-
-	1-5/8 "	R4133338	R4133338	R4166689	NR	-	-	-	-
-	1-5/8 "	R4133338	R4133338	R4166689	NR	-	-	-	-
-	1-5/8 "	R4133338	R4133338	R4166689	NR	-	-	-	-
-	1-5/8 "	R4133338	R4133338	R4166689	NR	-	-	-	-
-	1-5/8 "	R4133338	R4133338	R4166689	NR	-	-	-	-
-	1-5/8 "	R4133338	R4133338	R4166689	NR	-	-	-	-
-	1-5/8 "	R4133338	R4133338	R4166689	NR	-	-	-	-
-	1-5/8 "	R4133338	R4133338	R4166689	NR	-	-	-	-
-	1-3/4 "	R4133400	R4133400	R4166917	NR	-	-	-	-
-	1-3/4 "	R4133400	R4133400	R4166917	NR	-	-	-	-
-	1-1/4 "	R4133581	R4133582	R4166923	NR	-	-	-	-
-	1-1/4 "	R4133581	R4133582	R4166923	NR	-	-	-	-
-		-	-	-	-	-	-	-	-
-		-	-	-	-	-	-	-	-
-	1-1/4 "	R4133581	R4133582	R4166923	NR	-	-	-	-
-	1-1/4 "	R4133581	R4133582	R4166923	NR	-	-	-	-
-	1-1/8 "	R4133714	R4133715	R4166926	NR	-	-	-	-
-	1-1/8 "	R4133714	R4133715	R4166926	NR	-	-	-	-
-	1-1/4 "	R4133581	R4133582	R4166923	NR	-	-	-	-
-	1-1/4 "	R4133581	R4133582	R4166923	NR	-	-	-	-
-	1-1/4 "	R4133581	R4133582	R4166923	NR	-	-	-	-
-	1-1/4 "	R4133581	R4133582	R4166923	NR	-	-	-	-
-	1-1/4 "	R4133581	R4133582	R4166923	NR	-	-	-	-
-	1-1/4 "	R4133581	R4133582	R4166923	NR	-	-	-	-

MAKE MODEL YEAR AXLE CODE AXLE WEIGHT	AXLE & BRK. TYPE	BRK. MFG.	BRAKE SIZE	FMSI	MERITOR DISC PAD OR BRAKE SHOE	MERITOR GUIDE PIN OR RETURN SPRING KIT	MERITOR CALIPER HWD. KIT OR RETURN SPRING KIT	MERITOR ADJUSTER KIT (LEFT WHEEL)	MERITOR ADJUSTER KIT (RIGHT WHEEL)
ITE(Cont.)									
170, 1700, 1710, 1723, 1724, 1750, 1753, 1754 SERIES CONVENTIONAL CAB, SCHOOL BUS, TILT CAB(Cont.)									
1969 S1724, S1754 Conventional FA78, 81	Fa	WG	15 " x 3 "	1245C - 321	R700321	R40H521	R40H9237	R40H3502	R40H3503
S1724, S1754 Conventional FA89, 91, 98	Fa	WG	15 " x 3 "	1245C - 321	R700321	R40H521	R40H9237	R40H3502	R40H3503
	Fm	WG	15 " x 3 "	1245A - 235	R700235	R40H521	R40H9201	R40H3524	R40H3524
S1724, S1754 Conventional RA184	Ra	WG	15 " x 4 "	4645A - 376	Discontinued	R40H597	R40H9200	R40H3540	R40H3541
	Rm	WG	15 " x 4 "	4645A - 376	Discontinued	R40H597	R40H9200	R40H3518	R404148
S1724, S1754 Conventional RA25, 184	Ra	WG	15 " x 5 "	1252 - 346	R700346	R40H597	R40H9200	R40H3540	R40H3541
	Rm	WG	15 " x 5 "	1252 - 346	R700346	R40H597	R40H9200	R40H3518	R404148
S1724, S1754 Conventional RA29, 30, 187	Ra	WG	15 " x 5 "	1252 - 346	R700346	R40H597	R40H9200	R40H3540	R40H3541
	Rm	WG	15 " x 5 "	1252 - 346	R700346	R40H597	R40H9200	R40H3518	R404148
S1724, S1754 Conventional RA30, 187	Ra	WG	16 " x 5 "	1254 - 385	N/A	R40H597	R40H9200	NLA	NLA
	Rm	WG	16 " x 5 "	1254 - 385	N/A	R40H597	R40H9200	R404149	R404150
S1724, S1754 Conventional RA30, 39, 44, 186, 189	Ra	WG	15 " x 6 "	4596 - 381	R700381	R40H597	R40H9200	R40H3540	R40H3541
	Rm	WG	15 " x 6 "	4596 - 381	R700381	R40H597	R40H9200	R40H3518	R404148
S1724, S1754 Conventional RA39, 199	Ra	WG	15 " x 7 "	4597 - 383	R700383	R40H597	R40H9200	R40H3540	R40H3541
	Rm	WG	15 " x 7 "	4597 - 383	R700383	R40H597	R40H9200	R40H3518	R404148
S1724, S1754 Conventional RA44, 186	Ra	WG	15 " x 7 "	4597 - 383	R700383	R40H597	R40H9200	NLA	NLA
	Rm	WG	15 " x 7 "	4597 - 383	R700383	R40H597	R40H9200	R40H3518	R404148
S1724, S1754 Conventional RA47, 57	Ra	WG	16 " x 6 "	1255 - 386	N/A	R40H597	R40H9200	NLA	NLA
	Rm	WG	16 " x 6 "	1255 - 386	N/A	R40H597	R40H9200	R404149	R404150
1968 C1710, C1750 Cargostar Tilt Cab FA109, 208	Fa	WG	15 " x 3 "	1245C - 321	R700321	R40H521	R40H9237	R40H3502	R40H3503
	Fm	WG	15 " x 3 "	1245A - 235	R700235	R40H521	R40H9201	R40H3524	R40H3524
C1710, C1750 Cargostar Tilt Cab FA118, 127, 139	Fa	WG	15 " x 5 "	1345A - 491	N/A	R40H521	R40H9237	R40H3502	R40H3503
	Fm	WG	15 " x 5 "	1345 - 490	N/A	R40H521	R40H9201	R40H3524	R40H3524
C1710, C1750 Cargostar Tilt Cab FA208	Fa	WG	15 " x 3-1/2 "	1280B - 322	R464004	R40H521	R40H9237	R40H3502	R40H3503
	Fm	WG	15 " x 3-1/2 "	1280 - 463	R700463	R40H521	R40H9201	R40H3524	R40H3524
C1710, C1750 Cargostar Tilt Cab FA48, 68, 70, 72	Fa	WG	14 " x 2-1/2 "	1294A - 325	N/A	R40H521	R40H9237	R40H3502	R40H3503
	Fm	WG	14 " x 2-1/2 "	1294 - 296	N/A	R40H521	R40H9201	R40H3524	R40H3524
C1710, C1750 Cargostar Tilt Cab FA71, 73, 101	Fa	WG	15 " x 3 "	1245C - 321	R700321	R40H521	R40H9237	R40H3502	R40H3503
	Fa	WG	15 " x 3-1/2 "	1280B - 322	R464004	R40H521	R40H9237	R40H3502	R40H3503
	Fm	WG	15 " x 3 "	1245A - 235	R700235	R40H521	R40H9201	R40H3524	R40H3524
	Fm	WG	15 " x 3-1/2 "	1280 - 463	R700463	R40H521	R40H9201	R40H3524	R40H3524
C1710, C1750 Cargostar Tilt Cab FA74	Fa	WG	15 " x 3 "	1245C - 321	R700321	R40H521	R40H9237	R40H3502	R40H3503
	Fm	WG	15 " x 3 "	1245A - 235	R700235	R40H521	R40H9201	R40H3524	R40H3524
C1710, C1750 Cargostar Tilt Cab FA78, 81	Fa	WG	15 " x 3 "	1245C - 321	R700321	R40H521	R40H9237	R40H3502	R40H3503
C1710, C1750 Cargostar Tilt Cab FA89, 91, 98	Fa	WG	15 " x 3 "	1245C - 321	R700321	R40H521	R40H9237	R40H3502	R40H3503

MERITOR DRUM OR ROTOR NO.	CALIPER OR CYLINDER BORE SIZE	MERITOR CALIPER OR WHEEL CYLINDER (LEFT)	MERITOR CALIPER OR WHEEL CYLINDER (RIGHT)	MERITOR CALIPER OR WHEEL CYLINDER REPAIR KIT	MERITOR CALIPER PISTON	MERITOR MASTER CYLINDER	MERITOR MASTER CYLINDER KIT	MERITOR BRAKE HOSE (LEFT)	MERITOR BRAKE HOSE (RIGHT)
									ITE(Cont.)
170, 1700, 1710, 1723, 1724, 1750, 1753, 1754 SERIES CONVENTIONAL CAB, SCHOOL BUS, TILT CAB(Cont.)									
-	1-1/4 "	R4133581	R4133582	R4166923	NR	-	-	-	-
-	1-1/4 "	R4133581	R4133582	R4166923	NR	-	-	-	-
-	1-1/4 "	R4133581	R4133582	R4166923	NR	-	-	-	-
-	1-1/2 "	R4133580	R4133580	Discontinued	NR	-	-	-	-
-	1-1/2 "	R4133580	R4133580	Discontinued	NR	-	-	-	-
-	1-1/2 "	R4133580	R4133580	Discontinued	NR	-	-	-	-
-	1-1/2 "	R4133580	R4133580	Discontinued	NR	-	-	-	-
-	1-1/2 "	R4133580	R4133580	Discontinued	NR	-	-	-	-
-	1-1/2 "	R4133580	R4133580	Discontinued	NR	-	-	-	-
-	1-5/8 "	R4133338	R4133338	R4166689	NR	-	-	-	-
-	1-5/8 "	R4133338	R4133338	R4166689	NR	-	-	-	-
-	1-5/8 "	R4133338	R4133338	R4166689	NR	-	-	-	-
-	1-5/8 "	R4133338	R4133338	R4166689	NR	-	-	-	-
-	1-5/8 "	R4133338	R4133338	R4166689	NR	-	-	-	-
-	1-5/8 "	R4133338	R4133338	R4166689	NR	-	-	-	-
-	1-5/8 "	R4133338	R4133338	R4166689	NR	-	-	-	-
-	1-5/8 "	R4133338	R4133338	R4166689	NR	-	-	-	-
-	1-3/4 "	R4133400	R4133400	R4166917	NR	-	-	-	-
-	1-3/4 "	R4133400	R4133400	R4166917	NR	-	-	-	-
-	1-1/4 "	R4133581	R4133582	R4166923	NR	-	-	-	-
-	1-1/4 "	R4133581	R4133582	R4166923	NR	-	-	-	-
-		-	-	-	-	-	-	-	-
-		-	-	-	-	-	-	-	-
-	1-1/4 "	R4133581	R4133582	R4166923	NR	-	-	-	-
-	1-1/4 "	R4133581	R4133582	R4166923	NR	-	-	-	-
-	1-1/8 "	R4133714	R4133715	R4166926	NR	-	-	-	-
-	1-1/8 "	R4133714	R4133715	R4166926	NR	-	-	-	-
-	1-1/4 "	R4133581	R4133582	R4166923	NR	-	-	-	-
-	1-1/4 "	R4133581	R4133582	R4166923	NR	-	-	-	-
-	1-1/4 "	R4133581	R4133582	R4166923	NR	-	-	-	-
-	1-1/4 "	R4133581	R4133582	R4166923	NR	-	-	-	-
-	1-1/4 "	R4133581	R4133582	R4166923	NR	-	-	-	-
-	1-1/4 "	R4133581	R4133582	R4166923	NR	-	-	-	-
-	1-1/4 "	R4133581	R4133582	R4166923	NR	-	-	-	-
-	1-1/4 "	R4133581	R4133582	R4166923	NR	-	-	-	-

MAKE MODEL YEAR AXLE CODE AXLE WEIGHT	AXLE & BRK. TYPE	BRK. MFG.	BRAKE SIZE	FMSI	MERITOR DISC PAD OR BRAKE SHOE	MERITOR GUIDE PIN OR RETURN SPRING KIT	MERITOR CALIPER HWD. KIT OR RETURN SPRING KIT	MERITOR ADJUSTER KIT (LEFT WHEEL)	MERITOR ADJUSTER KIT (RIGHT WHEEL)
ITE(Cont.)									
170, 1700, 1710, 1723, 1724, 1750, 1753, 1754 SERIES CONVENTIONAL CAB, SCHOOL BUS, TILT CAB(Cont.)									
1968	Fm	WG	15 " x 3 "	1245A - 235	R700235	R40H521	R40H9201	R40H3524	R40H3524
C1710, C1750 Cargostar Tilt Cab RA184	Ra	WG	15 " x 4 "	4645A - 376	Discontinued	R40H597	R40H9200	R40H3540	R40H3541
	Rm	WG	15 " x 4 "	4645A - 376	Discontinued	R40H597	R40H9200	R40H3518	R404148
C1710, C1750 Cargostar Tilt Cab RA25, 184	Ra	WG	15 " x 5 "	1252 - 346	R700346	R40H597	R40H9200	R40H3540	R40H3541
	Rm	WG	15 " x 5 "	1252 - 346	R700346	R40H597	R40H9200	R40H3518	R404148
C1710, C1750 Cargostar Tilt Cab RA29, 30, 187	Ra	WG	15 " x 5 "	1252 - 346	R700346	R40H597	R40H9200	R40H3540	R40H3541
	Rm	WG	15 " x 5 "	1252 - 346	R700346	R40H597	R40H9200	R40H3518	R404148
C1710, C1750 Cargostar Tilt Cab RA30, 187	Ra	WG	16 " x 5 "	1254 - 385	N/A	R40H597	R40H9200	NLA	NLA
	Rm	WG	16 " x 5 "	1254 - 385	N/A	R40H597	R40H9200	R404149	R404150
C1710, C1750 Cargostar Tilt Cab RA30, 39, 44, 186, 189	Ra	WG	15 " x 6 "	4596 - 381	R700381	R40H597	R40H9200	R40H3540	R40H3541
	Rm	WG	15 " x 6 "	4596 - 381	R700381	R40H597	R40H9200	R40H3518	R404148
C1710, C1750 Cargostar Tilt Cab RA39, 199	Ra	WG	15 " x 7 "	4597 - 383	R700383	R40H597	R40H9200	R40H3540	R40H3541
	Rm	WG	15 " x 7 "	4597 - 383	R700383	R40H597	R40H9200	R40H3518	R404148
C1710, C1750 Cargostar Tilt Cab RA44, 186	Ra	WG	15 " x 7 "	4597 - 383	R700383	R40H597	R40H9200	NLA	NLA
	Rm	WG	15 " x 7 "	4597 - 383	R700383	R40H597	R40H9200	R40H3518	R404148
C1710, C1750 Cargostar Tilt Cab RA47, 57	Ra	WG	16 " x 6 "	1255 - 386	N/A	R40H597	R40H9200	NLA	NLA
	Rm	WG	16 " x 6 "	1255 - 386	N/A	R40H597	R40H9200	R404149	R404150
S1723, S1753 School Bus FA109, 208	Fa	WG	15 " x 3 "	1245C - 321	R700321	R40H521	R40H9237	R40H3502	R40H3503
	Fm	WG	15 " x 3 "	1245A - 235	R700235	R40H521	R40H9201	R40H3524	R40H3524
S1723, S1753 School Bus FA118, 127, 139	Fa	WG	15 " x 5 "	1345A - 491	N/A	R40H521	R40H9237	R40H3502	R40H3503
	Fm	WG	15 " x 5 "	1345 - 490	N/A	R40H521	R40H9201	R40H3524	R40H3524
S1723, S1753 School Bus FA208	Fa	WG	15 " x 3-1/2 "	1280B - 322	R464004	R40H521	R40H9237	R40H3502	R40H3503
	Fm	WG	15 " x 3-1/2 "	1280 - 463	R700463	R40H521	R40H9201	R40H3524	R40H3524
S1723, S1753 School Bus FA48, 68, 70, 72	Fa	WG	14 " x 2-1/2 "	1294A - 325	N/A	R40H521	R40H9237	R40H3502	R40H3503
	Fm	WG	14 " x 2-1/2 "	1294 - 296	N/A	R40H521	R40H9201	R40H3524	R40H3524
S1723, S1753 School Bus FA71, 73, 101	Fa	WG	15 " x 3 "	1245C - 321	R700321	R40H521	R40H9237	R40H3502	R40H3503
	Fa	WG	15 " x 3-1/2 "	1280B - 322	R464004	R40H521	R40H9237	R40H3502	R40H3503
	Fm	WG	15 " x 3 "	1245A - 235	R700235	R40H521	R40H9201	R40H3524	R40H3524
	Fm	WG	15 " x 3-1/2 "	1280 - 463	R700463	R40H521	R40H9201	R40H3524	R40H3524
S1723, S1753 School Bus FA74	Fa	WG	15 " x 3 "	1245C - 321	R700321	R40H521	R40H9237	R40H3502	R40H3503
	Fm	WG	15 " x 3 "	1245A - 235	R700235	R40H521	R40H9201	R40H3524	R40H3524
S1723, S1753 School Bus FA78, 81	Fa	WG	15 " x 3 "	1245C - 321	R700321	R40H521	R40H9237	R40H3502	R40H3503
S1723, S1753 School Bus FA89, 91, 98	Fa	WG	15 " x 3 "	1245C - 321	R700321	R40H521	R40H9237	R40H3502	R40H3503
	Fm	WG	15 " x 3 "	1245A - 235	R700235	R40H521	R40H9201	R40H3524	R40H3524
S1723, S1753 School Bus RA184	Ra	WG	15 " x 4 "	4645A - 376	Discontinued	R40H597	R40H9200	R40H3540	R40H3541
	Rm	WG	15 " x 4 "	4645A - 376	Discontinued	R40H597	R40H9200	R40H3518	R404148

MERITOR DRUM OR ROTOR NO.	CALIPER OR CYLINDER BORE SIZE	MERITOR CALIPER OR WHEEL CYLINDER (LEFT)	MERITOR CALIPER OR WHEEL CYLINDER (RIGHT)	MERITOR CALIPER OR WHEEL CYLINDER REPAIR KIT	MERITOR CALIPER PISTON	MERITOR MASTER CYLINDER	MERITOR MASTER CYLINDER KIT	MERITOR BRAKE HOSE (LEFT)	MERITOR BRAKE HOSE (RIGHT)
ITE(Cont.)									
170, 1700, 1710, 1723, 1724, 1750, 1753, 1754 SERIES CONVENTIONAL CAB, SCHOOL BUS, TILT CAB(Cont.)									
-	1-1/4 "	R4133581	R4133582	R4166923	NR	-	-	-	-
-	1-1/2 "	R4133580	R4133580	Discontinued	NR	-	-	-	-
-	1-1/2 "	R4133580	R4133580	Discontinued	NR	-	-	-	-
-	1-1/2 "	R4133580	R4133580	Discontinued	NR	-	-	-	-
-	1-1/2 "	R4133580	R4133580	Discontinued	NR	-	-	-	-
-	1-1/2 "	R4133580	R4133580	Discontinued	NR	-	-	-	-
-	1-1/2 "	R4133580	R4133580	Discontinued	NR	-	-	-	-
-	1-5/8 "	R4133338	R4133338	R4166689	NR	-	-	-	-
-	1-5/8 "	R4133338	R4133338	R4166689	NR	-	-	-	-
-	1-5/8 "	R4133338	R4133338	R4166689	NR	-	-	-	-
-	1-5/8 "	R4133338	R4133338	R4166689	NR	-	-	-	-
-	1-5/8 "	R4133338	R4133338	R4166689	NR	-	-	-	-
-	1-5/8 "	R4133338	R4133338	R4166689	NR	-	-	-	-
-	1-5/8 "	R4133338	R4133338	R4166689	NR	-	-	-	-
-	1-5/8 "	R4133338	R4133338	R4166689	NR	-	-	-	-
-	1-3/4 "	R4133400	R4133400	R4166917	NR	-	-	-	-
-	1-3/4 "	R4133400	R4133400	R4166917	NR	-	-	-	-
-	1-1/4 "	R4133581	R4133582	R4166923	NR	-	-	-	-
-	1-1/4 "	R4133581	R4133582	R4166923	NR	-	-	-	-
-		-	-	-	-	-	-	-	-
-		-	-	-	-	-	-	-	-
-	1-1/4 "	R4133581	R4133582	R4166923	NR	-	-	-	-
-	1-1/4 "	R4133581	R4133582	R4166923	NR	-	-	-	-
-	1-1/8 "	R4133714	R4133715	R4166926	NR	-	-	-	-
-	1-1/8 "	R4133714	R4133715	R4166926	NR	-	-	-	-
-	1-1/4 "	R4133581	R4133582	R4166923	NR	-	-	-	-
-	1-1/4 "	R4133581	R4133582	R4166923	NR	-	-	-	-
-	1-1/4 "	R4133581	R4133582	R4166923	NR	-	-	-	-
-	1-1/4 "	R4133581	R4133582	R4166923	NR	-	-	-	-
-	1-1/4 "	R4133581	R4133582	R4166923	NR	-	-	-	-
-	1-1/4 "	R4133581	R4133582	R4166923	NR	-	-	-	-
-	1-1/4 "	R4133581	R4133582	R4166923	NR	-	-	-	-
-	1-1/4 "	R4133581	R4133582	R4166923	NR	-	-	-	-
-	1-1/4 "	R4133581	R4133582	R4166923	NR	-	-	-	-
-	1-1/2 "	R4133580	R4133580	Discontinued	NR	-	-	-	-
-	1-1/2 "	R4133580	R4133580	Discontinued	NR	-	-	-	-

MAKE MODEL YEAR AXLE CODE AXLE WEIGHT	AXLE & BRK. TYPE	BRK. MFG.	BRAKE SIZE	FMSI	MERITOR DISC PAD OR BRAKE SHOE	MERITOR GUIDE PIN OR RETURN SPRING KIT	MERITOR CALIPER HWD. KIT OR RETURN SPRING KIT	MERITOR ADJUSTER KIT (LEFT WHEEL)	MERITOR ADJUSTER KIT (RIGHT WHEEL)
ITE(Cont.)									
170, 1700, 1710, 1723, 1724, 1750, 1753, 1754 SERIES CONVENTIONAL CAB, SCHOOL BUS, TILT CAB(Cont.)									
1968 S1723, S1753 School Bus RA25, 184	Ra	WG	15 " x 5 "	1252 - 346	R700346	R40H597	R40H9200	R40H3540	R40H3541
	Rm	WG	15 " x 5 "	1252 - 346	R700346	R40H597	R40H9200	R40H3518	R404148
S1723, S1753 School Bus RA29, 30, 187	Ra	WG	15 " x 5 "	1252 - 346	R700346	R40H597	R40H9200	R40H3540	R40H3541
	Rm	WG	15 " x 5 "	1252 - 346	R700346	R40H597	R40H9200	R40H3518	R404148
S1723, S1753 School Bus RA30, 187	Ra	WG	16 " x 5 "	1254 - 385	N/A	R40H597	R40H9200	NLA	NLA
	Rm	WG	16 " x 5 "	1254 - 385	N/A	R40H597	R40H9200	R404149	R404150
S1723, S1753 School Bus RA30, 39, 44, 186, 189	Ra	WG	15 " x 6 "	4596 - 381	R700381	R40H597	R40H9200	R40H3540	R40H3541
	Rm	WG	15 " x 6 "	4596 - 381	R700381	R40H597	R40H9200	R40H3518	R404148
S1723, S1753 School Bus RA39, 199	Ra	WG	15 " x 7 "	4597 - 383	R700383	R40H597	R40H9200	R40H3540	R40H3541
	Rm	WG	15 " x 7 "	4597 - 383	R700383	R40H597	R40H9200	R40H3518	R404148
S1723, S1753 School Bus RA44, 186	Ra	WG	15 " x 7 "	4597 - 383	R700383	R40H597	R40H9200	NLA	NLA
	Rm	WG	15 " x 7 "	4597 - 383	R700383	R40H597	R40H9200	R40H3518	R404148
S1723, S1753 School Bus RA47, 57	Ra	WG	16 " x 6 "	1255 - 386	N/A	R40H597	R40H9200	NLA	NLA
	Rm	WG	16 " x 6 "	1255 - 386	N/A	R40H597	R40H9200	R404149	R404150
S1724, S1754 Conventional FA109, 208	Fa	WG	15 " x 3 "	1245C - 321	R700321	R40H521	R40H9237	R40H3502	R40H3503
	Fm	WG	15 " x 3 "	1245A - 235	R700235	R40H521	R40H9201	R40H3524	R40H3524
S1724, S1754 Conventional FA118, 127, 139	Fa	WG	15 " x 5 "	1345A - 491	N/A	R40H521	R40H9237	R40H3502	R40H3503
	Fm	WG	15 " x 5 "	1345 - 490	N/A	R40H521	R40H9201	R40H3524	R40H3524
S1724, S1754 Conventional FA208	Fa	WG	15 " x 3-1/2 "	1280B - 322	R464004	R40H521	R40H9237	R40H3502	R40H3503
	Fm	WG	15 " x 3-1/2 "	1280 - 463	R700463	R40H521	R40H9201	R40H3524	R40H3524
S1724, S1754 Conventional FA48, 68, 70, 72	Fa	WG	14 " x 2-1/2 "	1294A - 325	N/A	R40H521	R40H9237	R40H3502	R40H3503
	Fm	WG	14 " x 2-1/2 "	1294 - 296	N/A	R40H521	R40H9201	R40H3524	R40H3524
S1724, S1754 Conventional FA71, 73, 101	Fa	WG	15 " x 3 "	1245C - 321	R700321	R40H521	R40H9237	R40H3502	R40H3503
	Fa	WG	15 " x 3-1/2 "	1280B - 322	R464004	R40H521	R40H9237	R40H3502	R40H3503
	Fm	WG	15 " x 3 "	1245A - 235	R700235	R40H521	R40H9201	R40H3524	R40H3524
	Fm	WG	15 " x 3-1/2 "	1280 - 463	R700463	R40H521	R40H9201	R40H3524	R40H3524
S1724, S1754 Conventional FA74	Fa	WG	15 " x 3 "	1245C - 321	R700321	R40H521	R40H9237	R40H3502	R40H3503
	Fm	WG	15 " x 3 "	1245A - 235	R700235	R40H521	R40H9201	R40H3524	R40H3524
S1724, S1754 Conventional FA78, 81	Fa	WG	15 " x 3 "	1245C - 321	R700321	R40H521	R40H9237	R40H3502	R40H3503
S1724, S1754 Conventional FA89, 91, 98	Fa	WG	15 " x 3 "	1245C - 321	R700321	R40H521	R40H9237	R40H3502	R40H3503
	Fm	WG	15 " x 3 "	1245A - 235	R700235	R40H521	R40H9201	R40H3524	R40H3524
S1724, S1754 Conventional RA184	Ra	WG	15 " x 4 "	4645A - 376	Discontinued	R40H597	R40H9200	R40H3540	R40H3541
	Rm	WG	15 " x 4 "	4645A - 376	Discontinued	R40H597	R40H9200	R40H3518	R404148
S1724, S1754 Conventional RA25, 184	Ra	WG	15 " x 5 "	1252 - 346	R700346	R40H597	R40H9200	R40H3540	R40H3541
	Rm	WG	15 " x 5 "	1252 - 346	R700346	R40H597	R40H9200	R40H3518	R404148
S1724, S1754 Conventional RA29, 30, 187	Ra	WG	15 " x 5 "	1252 - 346	R700346	R40H597	R40H9200	R40H3540	R40H3541
	Rm	WG	15 " x 5 "	1252 - 346	R700346	R40H597	R40H9200	R40H3518	R404148
S1724, S1754 Conventional RA30, 187	Ra	WG	16 " x 5 "	1254 - 385	N/A	R40H597	R40H9200	NLA	NLA
	Rm	WG	16 " x 5 "	1254 - 385	N/A	R40H597	R40H9200	R404149	R404150
S1724, S1754 Conventional RA30, 39, 44, 186, 189	Ra	WG	15 " x 6 "	4596 - 381	R700381	R40H597	R40H9200	R40H3540	R40H3541
	Rm	WG	15 " x 6 "	4596 - 381	R700381	R40H597	R40H9200	R40H3518	R404148

MERITOR DRUM OR ROTOR NO.	CALIPER OR CYLINDER BORE SIZE	MERITOR CALIPER OR WHEEL CYLINDER (LEFT)	MERITOR CALIPER OR WHEEL CYLINDER (RIGHT)	MERITOR CALIPER OR WHEEL CYLINDER REPAIR KIT	MERITOR CALIPER PISTON	MERITOR MASTER CYLINDER	MERITOR MASTER CYLINDER KIT	MERITOR BRAKE HOSE (LEFT)	MERITOR BRAKE HOSE (RIGHT)
									ITE(Cont.)
170, 1700, 1710, 1723, 1724, 1750, 1753, 1754 SERIES CONVENTIONAL CAB, SCHOOL BUS, TILT CAB(Cont.)									
-	1-1/2 "	R4133580	R4133580	Discontinued	NR	-	-	-	-
-	1-1/2 "	R4133580	R4133580	Discontinued	NR	-	-	-	-
-	1-1/2 "	R4133580	R4133580	Discontinued	NR	-	-	-	-
-	1-1/2 "	R4133580	R4133580	Discontinued	NR	-	-	-	-
-	1-5/8 "	R4133338	R4133338	R4166689	NR	-	-	-	-
-	1-5/8 "	R4133338	R4133338	R4166689	NR	-	-	-	-
-	1-5/8 "	R4133338	R4133338	R4166689	NR	-	-	-	-
-	1-5/8 "	R4133338	R4133338	R4166689	NR	-	-	-	-
-	1-5/8 "	R4133338	R4133338	R4166689	NR	-	-	-	-
-	1-5/8 "	R4133338	R4133338	R4166689	NR	-	-	-	-
-	1-5/8 "	R4133338	R4133338	R4166689	NR	-	-	-	-
-	1-5/8 "	R4133338	R4133338	R4166689	NR	-	-	-	-
-	1-3/4 "	R4133400	R4133400	R4166917	NR	-	-	-	-
-	1-3/4 "	R4133400	R4133400	R4166917	NR	-	-	-	-
-	1-1/4 "	R4133581	R4133582	R4166923	NR	-	-	-	-
-	1-1/4 "	R4133581	R4133582	R4166923	NR	-	-	-	-
-		-	-	-	-	-	-	-	-
-		-	-	-	-	-	-	-	-
-	1-1/4 "	R4133581	R4133582	R4166923	NR	-	-	-	-
-	1-1/4 "	R4133581	R4133582	R4166923	NR	-	-	-	-
-	1-1/8 "	R4133714	R4133715	R4166926	NR	-	-	-	-
-	1-1/8 "	R4133714	R4133715	R4166926	NR	-	-	-	-
-	1-1/4 "	R4133581	R4133582	R4166923	NR	-	-	-	-
-	1-1/4 "	R4133581	R4133582	R4166923	NR	-	-	-	-
-	1-1/4 "	R4133581	R4133582	R4166923	NR	-	-	-	-
-	1-1/4 "	R4133581	R4133582	R4166923	NR	-	-	-	-
-	1-1/4 "	R4133581	R4133582	R4166923	NR	-	-	-	-
-	1-1/4 "	R4133581	R4133582	R4166923	NR	-	-	-	-
-	1-1/4 "	R4133581	R4133582	R4166923	NR	-	-	-	-
-	1-1/4 "	R4133581	R4133582	R4166923	NR	-	-	-	-
-	1-1/2 "	R4133580	R4133580	Discontinued	NR	-	-	-	-
-	1-1/2 "	R4133580	R4133580	Discontinued	NR	-	-	-	-
-	1-1/2 "	R4133580	R4133580	Discontinued	NR	-	-	-	-
-	1-1/2 "	R4133580	R4133580	Discontinued	NR	-	-	-	-
-	1-1/2 "	R4133580	R4133580	Discontinued	NR	-	-	-	-
-	1-1/2 "	R4133580	R4133580	Discontinued	NR	-	-	-	-
-	1-5/8 "	R4133338	R4133338	R4166689	NR	-	-	-	-
-	1-5/8 "	R4133338	R4133338	R4166689	NR	-	-	-	-
-	1-5/8 "	R4133338	R4133338	R4166689	NR	-	-	-	-
-	1-5/8 "	R4133338	R4133338	R4166689	NR	-	-	-	-

MAKE MODEL YEAR AXLE CODE AXLE WEIGHT	AXLE & BRK. TYPE	BRK. MFG.	BRAKE SIZE	FMSI	MERITOR DISC PAD OR BRAKE SHOE	MERITOR GUIDE PIN OR RETURN SPRING KIT	MERITOR CALIPER HWD. KIT OR RETURN SPRING KIT	MERITOR ADJUSTER KIT (LEFT WHEEL)	MERITOR ADJUSTER KIT (RIGHT WHEEL)
ITE(Cont.)									
170, 1700, 1710, 1723, 1724, 1750, 1753, 1754 SERIES CONVENTIONAL CAB, SCHOOL BUS, TILT CAB(Cont.)									
1968 S1724, S1754 Conventional RA39, 199	Ra	WG	15 " x 7 "	4597 - 383	R700383	R40H597	R40H9200	R40H3540	R40H3541
	Rm	WG	15 " x 7 "	4597 - 383	R700383	R40H597	R40H9200	R40H3518	R404148
S1724, S1754 Conventional RA44, 186	Ra	WG	15 " x 7 "	4597 - 383	R700383	R40H597	R40H9200	NLA	NLA
	Rm	WG	15 " x 7 "	4597 - 383	R700383	R40H597	R40H9200	R40H3518	R404148
S1724, S1754 Conventional RA47, 57	Ra	WG	16 " x 6 "	1255 - 386	N/A	R40H597	R40H9200	NLA	NLA
	Rm	WG	16 " x 6 "	1255 - 386	N/A	R40H597	R40H9200	R404149	R404150
1967 C1710, C1750 Cargostar Tilt Cab FA109, 208	Fa	WG	15 " x 3 "	1245C - 321	R700321	R40H521	R40H9237	R40H3502	R40H3503
	Fm	WG	15 " x 3 "	1245A - 235	R700235	R40H521	R40H9201	R40H3524	R40H3524
C1710, C1750 Cargostar Tilt Cab FA118, 127, 139	Fa	WG	15 " x 5 "	1345A - 491	N/A	R40H521	R40H9237	R40H3502	R40H3503
	Fm	WG	15 " x 5 "	1345 - 490	N/A	R40H521	R40H9201	R40H3524	R40H3524
C1710, C1750 Cargostar Tilt Cab FA208	Fa	WG	15 " x 3-1/2 "	1280B - 322	R464004	R40H521	R40H9237	R40H3502	R40H3503
	Fm	WG	15 " x 3-1/2 "	1280 - 463	R700463	R40H521	R40H9201	R40H3524	R40H3524
C1710, C1750 Cargostar Tilt Cab FA48, 68, 70, 72	Fa	WG	14 " x 2-1/2 "	1294A - 325	N/A	R40H521	R40H9237	R40H3502	R40H3503
	Fm	WG	14 " x 2-1/2 "	1294 - 296	N/A	R40H521	R40H9201	R40H3524	R40H3524
C1710, C1750 Cargostar Tilt Cab FA71, 73, 101	Fa	WG	15 " x 3 "	1245C - 321	R700321	R40H521	R40H9237	R40H3502	R40H3503
	Fa	WG	15 " x 3-1/2 "	1280B - 322	R464004	R40H521	R40H9237	R40H3502	R40H3503
	Fm	WG	15 " x 3 "	1245A - 235	R700235	R40H521	R40H9201	R40H3524	R40H3524
	Fm	WG	15 " x 3-1/2 "	1280 - 463	R700463	R40H521	R40H9201	R40H3524	R40H3524
C1710, C1750 Cargostar Tilt Cab FA74	Fa	WG	15 " x 3 "	1245C - 321	R700321	R40H521	R40H9237	R40H3502	R40H3503
	Fm	WG	15 " x 3 "	1245A - 235	R700235	R40H521	R40H9201	R40H3524	R40H3524
C1710, C1750 Cargostar Tilt Cab FA78, 81	Fa	WG	15 " x 3 "	1245C - 321	R700321	R40H521	R40H9237	R40H3502	R40H3503
C1710, C1750 Cargostar Tilt Cab FA89, 91, 98	Fa	WG	15 " x 3 "	1245C - 321	R700321	R40H521	R40H9237	R40H3502	R40H3503
	Fm	WG	15 " x 3 "	1245A - 235	R700235	R40H521	R40H9201	R40H3524	R40H3524
C1710, C1750 Cargostar Tilt Cab RA184	Ra	WG	15 " x 4 "	4645A - 376	Discontinued	R40H597	R40H9200	R40H3540	R40H3541
	Rm	WG	15 " x 4 "	4645A - 376	Discontinued	R40H597	R40H9200	R40H3518	R404148
C1710, C1750 Cargostar Tilt Cab RA25, 184	Ra	WG	15 " x 5 "	1252 - 346	R700346	R40H597	R40H9200	R40H3540	R40H3541
	Rm	WG	15 " x 5 "	1252 - 346	R700346	R40H597	R40H9200	R40H3518	R404148
C1710, C1750 Cargostar Tilt Cab RA29, 30, 187	Ra	WG	15 " x 5 "	1252 - 346	R700346	R40H597	R40H9200	R40H3540	R40H3541
	Rm	WG	15 " x 5 "	1252 - 346	R700346	R40H597	R40H9200	R40H3518	R404148
C1710, C1750 Cargostar Tilt Cab RA30, 187	Ra	WG	16 " x 5 "	1254 - 385	N/A	R40H597	R40H9200	NLA	NLA
	Rm	WG	16 " x 5 "	1254 - 385	N/A	R40H597	R40H9200	R404149	R404150
C1710, C1750 Cargostar Tilt Cab RA30, 39, 44, 186, 189	Ra	WG	15 " x 6 "	4596 - 381	R700381	R40H597	R40H9200	R40H3540	R40H3541

MERITOR DRUM OR ROTOR NO.	CALIPER OR CYLINDER BORE SIZE	MERITOR CALIPER OR WHEEL CYLINDER (LEFT)	MERITOR CALIPER OR WHEEL CYLINDER (RIGHT)	MERITOR CALIPER OR WHEEL CYLINDER REPAIR KIT	MERITOR CALIPER PISTON	MERITOR MASTER CYLINDER	MERITOR MASTER CYLINDER KIT	MERITOR BRAKE HOSE (LEFT)	MERITOR BRAKE HOSE (RIGHT)
									ITE(Cont.)
170, 1700, 1710, 1723, 1724, 1750, 1753, 1754 SERIES CONVENTIONAL CAB, SCHOOL BUS, TILT CAB(Cont.)									
-	1-5/8 "	R4133338	R4133338	R4166689	NR	-	-	-	-
-	1-5/8 "	R4133338	R4133338	R4166689	NR	-	-	-	-
-	1-5/8 "	R4133338	R4133338	R4166689	NR	-	-	-	-
-	1-5/8 "	R4133338	R4133338	R4166689	NR	-	-	-	-
-	1-3/4 "	R4133400	R4133400	R4166917	NR	-	-	-	-
-	1-3/4 "	R4133400	R4133400	R4166917	NR	-	-	-	-
-	1-1/4 "	R4133581	R4133582	R4166923	NR	-	-	-	-
-	1-1/4 "	R4133581	R4133582	R4166923	NR	-	-	-	-
-		-	-	-	-	-	-	-	-
-		-	-	-	-	-	-	-	-
-	1-1/4 "	R4133581	R4133582	R4166923	NR	-	-	-	-
-	1-1/4 "	R4133581	R4133582	R4166923	NR	-	-	-	-
-	1-1/8 "	R4133714	R4133715	R4166926	NR	-	-	-	-
-	1-1/8 "	R4133714	R4133715	R4166926	NR	-	-	-	-
-	1-1/4 "	R4133581	R4133582	R4166923	NR	-	-	-	-
-	1-1/4 "	R4133581	R4133582	R4166923	NR	-	-	-	-
-	1-1/4 "	R4133581	R4133582	R4166923	NR	-	-	-	-
-	1-1/4 "	R4133581	R4133582	R4166923	NR	-	-	-	-
-	1-1/4 "	R4133581	R4133582	R4166923	NR	-	-	-	-
-	1-1/4 "	R4133581	R4133582	R4166923	NR	-	-	-	-
-	1-1/4 "	R4133581	R4133582	R4166923	NR	-	-	-	-
-	1-1/4 "	R4133581	R4133582	R4166923	NR	-	-	-	-
-	1-1/4 "	R4133581	R4133582	R4166923	NR	-	-	-	-
-	1-1/2 "	R4133580	R4133580	Discontinued	NR	-	-	-	-
-	1-1/2 "	R4133580	R4133580	Discontinued	NR	-	-	-	-
-	1-1/2 "	R4133580	R4133580	Discontinued	NR	-	-	-	-
-	1-1/2 "	R4133580	R4133580	Discontinued	NR	-	-	-	-
-	1-1/2 "	R4133580	R4133580	Discontinued	NR	-	-	-	-
-	1-1/2 "	R4133580	R4133580	Discontinued	NR	-	-	-	-
-	1-5/8 "	R4133338	R4133338	R4166689	NR	-	-	-	-
-	1-5/8 "	R4133338	R4133338	R4166689	NR	-	-	-	-
-	1-5/8 "	R4133338	R4133338	R4166689	NR	-	-	-	-

MAKE MODEL YEAR AXLE CODE AXLE WEIGHT	AXLE & BRK. TYPE	BRK. MFG.	BRAKE SIZE	FMSI	MERITOR DISC PAD OR BRAKE SHOE	MERITOR GUIDE PIN OR RETURN SPRING KIT	MERITOR CALIPER HWD. KIT OR RETURN SPRING KIT	MERITOR ADJUSTER KIT (LEFT WHEEL)	MERITOR ADJUSTER KIT (RIGHT WHEEL)
ITE(Cont.)									
170, 1700, 1710, 1723, 1724, 1750, 1753, 1754 SERIES CONVENTIONAL CAB, SCHOOL BUS, TILT CAB(Cont.)									
1967	Rm	WG	15 " x 6 "	4596 - 381	R700381	R40H597	R40H9200	R40H3518	R404148
C1710, C1750 Cargostar Tilt Cab RA39, 199	Ra	WG	15 " x 7 "	4597 - 383	R700383	R40H597	R40H9200	R40H3540	R40H3541
	Rm	WG	15 " x 7 "	4597 - 383	R700383	R40H597	R40H9200	R40H3518	R404148
C1710, C1750 Cargostar Tilt Cab RA44, 186	Ra	WG	15 " x 7 "	4597 - 383	R700383	R40H597	R40H9200	NLA	NLA
	Rm	WG	15 " x 7 "	4597 - 383	R700383	R40H597	R40H9200	R40H3518	R404148
C1710, C1750 Cargostar Tilt Cab RA47, 57	Ra	WG	16 " x 6 "	1255 - 386	N/A	R40H597	R40H9200	NLA	NLA
	Rm	WG	16 " x 6 "	1255 - 386	N/A	R40H597	R40H9200	R404149	R404150
S1723, S1753 School Bus FA109, 208	Fa	WG	15 " x 3 "	1245C - 321	R700321	R40H521	R40H9237	R40H3502	R40H3503
	Fm	WG	15 " x 3 "	1245A - 235	R700235	R40H521	R40H9201	R40H3524	R40H3524
S1723, S1753 School Bus FA118, 127, 139	Fa	WG	15 " x 5 "	1345A - 491	N/A	R40H521	R40H9237	R40H3502	R40H3503
	Fm	WG	15 " x 5 "	1345 - 490	N/A	R40H521	R40H9201	R40H3524	R40H3524
S1723, S1753 School Bus FA208	Fa	WG	15 " x 3-1/2 "	1280B - 322	R464004	R40H521	R40H9237	R40H3502	R40H3503
	Fm	WG	15 " x 3-1/2 "	1280 - 463	R700463	R40H521	R40H9201	R40H3524	R40H3524
S1723, S1753 School Bus FA48, 68, 70, 72	Fa	WG	14 " x 2-1/2 "	1294A - 325	N/A	R40H521	R40H9237	R40H3502	R40H3503
	Fm	WG	14 " x 2-1/2 "	1294 - 296	N/A	R40H521	R40H9201	R40H3524	R40H3524
S1723, S1753 School Bus FA71, 73, 101	Fa	WG	15 " x 3 "	1245C - 321	R700321	R40H521	R40H9237	R40H3502	R40H3503
	Fa	WG	15 " x 3-1/2 "	1280B - 322	R464004	R40H521	R40H9237	R40H3502	R40H3503
	Fm	WG	15 " x 3 "	1245A - 235	R700235	R40H521	R40H9201	R40H3524	R40H3524
	Fm	WG	15 " x 3-1/2 "	1280 - 463	R700463	R40H521	R40H9201	R40H3524	R40H3524
S1723, S1753 School Bus FA74	Fa	WG	15 " x 3 "	1245C - 321	R700321	R40H521	R40H9237	R40H3502	R40H3503
	Fm	WG	15 " x 3 "	1245A - 235	R700235	R40H521	R40H9201	R40H3524	R40H3524
S1723, S1753 School Bus FA78, 81	Fa	WG	15 " x 3 "	1245C - 321	R700321	R40H521	R40H9237	R40H3502	R40H3503
S1723, S1753 School Bus FA89, 91, 98	Fa	WG	15 " x 3 "	1245C - 321	R700321	R40H521	R40H9237	R40H3502	R40H3503
	Fm	WG	15 " x 3 "	1245A - 235	R700235	R40H521	R40H9201	R40H3524	R40H3524
S1723, S1753 School Bus RA184	Ra	WG	15 " x 4 "	4645A - 376	Discontinued	R40H597	R40H9200	R40H3540	R40H3541
	Rm	WG	15 " x 4 "	4645A - 376	Discontinued	R40H597	R40H9200	R40H3518	R404148
S1723, S1753 School Bus RA25, 184	Ra	WG	15 " x 5 "	1252 - 346	R700346	R40H597	R40H9200	R40H3540	R40H3541
	Rm	WG	15 " x 5 "	1252 - 346	R700346	R40H597	R40H9200	R40H3518	R404148
S1723, S1753 School Bus RA29, 30, 187	Ra	WG	15 " x 5 "	1252 - 346	R700346	R40H597	R40H9200	R40H3540	R40H3541
	Rm	WG	15 " x 5 "	1252 - 346	R700346	R40H597	R40H9200	R40H3518	R404148
S1723, S1753 School Bus RA30, 187	Ra	WG	16 " x 5 "	1254 - 385	N/A	R40H597	R40H9200	NLA	NLA
	Rm	WG	16 " x 5 "	1254 - 385	N/A	R40H597	R40H9200	R404149	R404150
S1723, S1753 School Bus RA30, 39, 44, 186, 189	Ra	WG	15 " x 6 "	4596 - 381	R700381	R40H597	R40H9200	R40H3540	R40H3541
	Rm	WG	15 " x 6 "	4596 - 381	R700381	R40H597	R40H9200	R40H3518	R404148
S1723, S1753 School Bus RA39, 199	Ra	WG	15 " x 7 "	4597 - 383	R700383	R40H597	R40H9200	R40H3540	R40H3541
	Rm	WG	15 " x 7 "	4597 - 383	R700383	R40H597	R40H9200	R40H3518	R404148
S1723, S1753 School Bus RA44, 186	Ra	WG	15 " x 7 "	4597 - 383	R700383	R40H597	R40H9200	NLA	NLA
	Rm	WG	15 " x 7 "	4597 - 383	R700383	R40H597	R40H9200	R40H3518	R404148
S1723, S1753 School Bus RA47, 57	Ra	WG	16 " x 6 "	1255 - 386	N/A	R40H597	R40H9200	NLA	NLA

MERITOR DRUM OR ROTOR NO.	CALIPER OR CYLINDER BORE SIZE	MERITOR CALIPER OR WHEEL CYLINDER (LEFT)	MERITOR CALIPER OR WHEEL CYLINDER (RIGHT)	MERITOR CALIPER OR WHEEL CYLINDER REPAIR KIT	MERITOR CALIPER PISTON	MERITOR MASTER CYLINDER	MERITOR MASTER CYLINDER KIT	MERITOR BRAKE HOSE (LEFT)	MERITOR BRAKE HOSE (RIGHT)
									ITE(Cont.)
170, 1700, 1710, 1723, 1724, 1750, 1753, 1754 SERIES CONVENTIONAL CAB, SCHOOL BUS, TILT CAB(Cont.)									
-	1-5/8 "	R4133338	R4133338	R4166689	NR	-	-	-	-
-	1-5/8 "	R4133338	R4133338	R4166689	NR	-	-	-	-
-	1-5/8 "	R4133338	R4133338	R4166689	NR	-	-	-	-
-	1-5/8 "	R4133338	R4133338	R4166689	NR	-	-	-	-
-	1-5/8 "	R4133338	R4133338	R4166689	NR	-	-	-	-
-	1-3/4 "	R4133400	R4133400	R4166917	NR	-	-	-	-
-	1-3/4 "	R4133400	R4133400	R4166917	NR	-	-	-	-
-	1-1/4 "	R4133581	R4133582	R4166923	NR	-	-	-	-
-	1-1/4 "	R4133581	R4133582	R4166923	NR	-	-	-	-
-		-	-	-	-	-	-	-	-
-		-	-	-	-	-	-	-	-
-	1-1/4 "	R4133581	R4133582	R4166923	NR	-	-	-	-
-	1-1/4 "	R4133581	R4133582	R4166923	NR	-	-	-	-
-	1-1/8 "	R4133714	R4133715	R4166926	NR	-	-	-	-
-	1-1/8 "	R4133714	R4133715	R4166926	NR	-	-	-	-
-	1-1/4 "	R4133581	R4133582	R4166923	NR	-	-	-	-
-	1-1/4 "	R4133581	R4133582	R4166923	NR	-	-	-	-
-	1-1/4 "	R4133581	R4133582	R4166923	NR	-	-	-	-
-	1-1/4 "	R4133581	R4133582	R4166923	NR	-	-	-	-
-	1-1/4 "	R4133581	R4133582	R4166923	NR	-	-	-	-
-	1-1/4 "	R4133581	R4133582	R4166923	NR	-	-	-	-
-	1-1/4 "	R4133581	R4133582	R4166923	NR	-	-	-	-
-	1-1/4 "	R4133581	R4133582	R4166923	NR	-	-	-	-
-	1-1/2 "	R4133580	R4133580	Discontinued	NR	-	-	-	-
-	1-1/2 "	R4133580	R4133580	Discontinued	NR	-	-	-	-
-	1-1/2 "	R4133580	R4133580	Discontinued	NR	-	-	-	-
-	1-1/2 "	R4133580	R4133580	Discontinued	NR	-	-	-	-
-	1-1/2 "	R4133580	R4133580	Discontinued	NR	-	-	-	-
-	1-1/2 "	R4133580	R4133580	Discontinued	NR	-	-	-	-
-	1-5/8 "	R4133338	R4133338	R4166689	NR	-	-	-	-
-	1-5/8 "	R4133338	R4133338	R4166689	NR	-	-	-	-
-	1-5/8 "	R4133338	R4133338	R4166689	NR	-	-	-	-
-	1-5/8 "	R4133338	R4133338	R4166689	NR	-	-	-	-
-	1-5/8 "	R4133338	R4133338	R4166689	NR	-	-	-	-
-	1-5/8 "	R4133338	R4133338	R4166689	NR	-	-	-	-
-	1-5/8 "	R4133338	R4133338	R4166689	NR	-	-	-	-
-	1-3/4 "	R4133400	R4133400	R4166917	NR	-	-	-	-

MAKE MODEL YEAR AXLE CODE AXLE WEIGHT	AXLE & BRK. TYPE	BRK. MFG.	BRAKE SIZE	FMSI	MERITOR DISC PAD OR BRAKE SHOE	MERITOR GUIDE PIN OR RETURN SPRING KIT	MERITOR CALIPER HWD. KIT OR RETURN SPRING KIT	MERITOR ADJUSTER KIT (LEFT WHEEL)	MERITOR ADJUSTER KIT (RIGHT WHEEL)
ITE(Cont.)									
170, 1700, 1710, 1723, 1724, 1750, 1753, 1754 SERIES CONVENTIONAL CAB, SCHOOL BUS, TILT CAB(Cont.)									
1967									
	Rm	WG	16 " x 6 "	1255 - 386	N/A	R40H597	R40H9200	R404149	R404150
S1724, S1754 Conventional									
FA109, 208	Fa	WG	15 " x 3 "	1245C - 321	R700321	R40H521	R40H9237	R40H3502	R40H3503
	Fm	WG	15 " x 3 "	1245A - 235	R700235	R40H521	R40H9201	R40H3524	R40H3524
S1724, S1754 Conventional									
FA118, 127, 139	Fa	WG	15 " x 5 "	1345A - 491	N/A	R40H521	R40H9237	R40H3502	R40H3503
	Fm	WG	15 " x 5 "	1345 - 490	N/A	R40H521	R40H9201	R40H3524	R40H3524
S1724, S1754 Conventional									
FA208	Fa	WG	15 " x 3-1/2 "	1280B - 322	R464004	R40H521	R40H9237	R40H3502	R40H3503
	Fm	WG	15 " x 3-1/2 "	1280 - 463	R700463	R40H521	R40H9201	R40H3524	R40H3524
S1724, S1754 Conventional									
FA48, 68, 70, 72	Fa	WG	14 " x 2-1/2 "	1294A - 325	N/A	R40H521	R40H9237	R40H3502	R40H3503
	Fm	WG	14 " x 2-1/2 "	1294 - 296	N/A	R40H521	R40H9201	R40H3524	R40H3524
S1724, S1754 Conventional									
FA71, 73, 101	Fa	WG	15 " x 3 "	1245C - 321	R700321	R40H521	R40H9237	R40H3502	R40H3503
	Fa	WG	15 " x 3-1/2 "	1280B - 322	R464004	R40H521	R40H9237	R40H3502	R40H3503
	Fm	WG	15 " x 3 "	1245A - 235	R700235	R40H521	R40H9201	R40H3524	R40H3524
	Fm	WG	15 " x 3-1/2 "	1280 - 463	R700463	R40H521	R40H9201	R40H3524	R40H3524
S1724, S1754 Conventional									
FA74	Fa	WG	15 " x 3 "	1245C - 321	R700321	R40H521	R40H9237	R40H3502	R40H3503
	Fm	WG	15 " x 3 "	1245A - 235	R700235	R40H521	R40H9201	R40H3524	R40H3524
S1724, S1754 Conventional									
FA78, 81	Fa	WG	15 " x 3 "	1245C - 321	R700321	R40H521	R40H9237	R40H3502	R40H3503
S1724, S1754 Conventional									
FA89, 91, 98	Fa	WG	15 " x 3 "	1245C - 321	R700321	R40H521	R40H9237	R40H3502	R40H3503
	Fm	WG	15 " x 3 "	1245A - 235	R700235	R40H521	R40H9201	R40H3524	R40H3524
S1724, S1754 Conventional									
RA184	Ra	WG	15 " x 4 "	4645A - 376	Discontinued	R40H597	R40H9200	R40H3540	R40H3541
	Rm	WG	15 " x 4 "	4645A - 376	Discontinued	R40H597	R40H9200	R40H3518	R404148
S1724, S1754 Conventional									
RA25, 184	Ra	WG	15 " x 5 "	1252 - 346	R700346	R40H597	R40H9200	R40H3540	R40H3541
	Rm	WG	15 " x 5 "	1252 - 346	R700346	R40H597	R40H9200	R40H3518	R404148
S1724, S1754 Conventional									
RA29, 30, 187	Ra	WG	15 " x 5 "	1252 - 346	R700346	R40H597	R40H9200	R40H3540	R40H3541
	Rm	WG	15 " x 5 "	1252 - 346	R700346	R40H597	R40H9200	R40H3518	R404148
S1724, S1754 Conventional									
RA30, 187	Ra	WG	16 " x 5 "	1254 - 385	N/A	R40H597	R40H9200	NLA	NLA
	Rm	WG	16 " x 5 "	1254 - 385	N/A	R40H597	R40H9200	R404149	R404150
S1724, S1754 Conventional									
RA30, 39, 44, 186, 189	Ra	WG	15 " x 6 "	4596 - 381	R700381	R40H597	R40H9200	R40H3540	R40H3541
	Rm	WG	15 " x 6 "	4596 - 381	R700381	R40H597	R40H9200	R40H3518	R404148
S1724, S1754 Conventional									
RA39, 199	Ra	WG	15 " x 7 "	4597 - 383	R700383	R40H597	R40H9200	R40H3540	R40H3541
	Rm	WG	15 " x 7 "	4597 - 383	R700383	R40H597	R40H9200	R40H3518	R404148
S1724, S1754 Conventional									
RA44, 186	Ra	WG	15 " x 7 "	4597 - 383	R700383	R40H597	R40H9200	NLA	NLA
	Rm	WG	15 " x 7 "	4597 - 383	R700383	R40H597	R40H9200	R40H3518	R404148
S1724, S1754 Conventional									
RA47, 57	Ra	WG	16 " x 6 "	1255 - 386	N/A	R40H597	R40H9200	NLA	NLA
	Rm	WG	16 " x 6 "	1255 - 386	N/A	R40H597	R40H9200	R404149	R404150
1966									
C1710, C1750 Cargostar Tilt Cab									
FA109, 208	Fa	WG	15 " x 3 "	1245C - 321	R700321	R40H521	R40H9237	R40H3502	R40H3503
	Fm	WG	15 " x 3 "	1245A - 235	R700235	R40H521	R40H9201	R40H3524	R40H3524
C1710, C1750 Cargostar Tilt Cab									
FA118, 127, 139	Fa	WG	15 " x 5 "	1345A - 491	N/A	R40H521	R40H9237	R40H3502	R40H3503
	Fm	WG	15 " x 5 "	1345 - 490	N/A	R40H521	R40H9201	R40H3524	R40H3524
C1710, C1750 Cargostar Tilt Cab									
FA208	Fa	WG	15 " x 3-1/2 "	1280B - 322	R464004	R40H521	R40H9237	R40H3502	R40H3503

MERITOR DRUM OR ROTOR NO.	CALIPER OR CYLINDER BORE SIZE	MERITOR CALIPER OR WHEEL CYLINDER (LEFT)	MERITOR CALIPER OR WHEEL CYLINDER (RIGHT)	MERITOR CALIPER OR WHEEL CYLINDER REPAIR KIT	MERITOR CALIPER PISTON	MERITOR MASTER CYLINDER	MERITOR MASTER CYLINDER KIT	MERITOR BRAKE HOSE (LEFT)	MERITOR BRAKE HOSE (RIGHT)
									ITE(Cont.)
170, 1700, 1710, 1723, 1724, 1750, 1753, 1754 SERIES CONVENTIONAL CAB, SCHOOL BUS, TILT CAB(Cont.)									
-	1-3/4 "	R4133400	R4133400	R4166917	NR	-	-	-	-
-	1-1/4 "	R4133581	R4133582	R4166923	NR	-	-	-	-
-	1-1/4 "	R4133581	R4133582	R4166923	NR	-	-	-	-
-		-	-	-	-	-	-	-	-
-		-	-	-	-	-	-	-	-
-	1-1/4 "	R4133581	R4133582	R4166923	NR	-	-	-	-
-	1-1/4 "	R4133581	R4133582	R4166923	NR	-	-	-	-
-	1-1/8 "	R4133714	R4133715	R4166926	NR	-	-	-	-
-	1-1/8 "	R4133714	R4133715	R4166926	NR	-	-	-	-
-	1-1/4 "	R4133581	R4133582	R4166923	NR	-	-	-	-
-	1-1/4 "	R4133581	R4133582	R4166923	NR	-	-	-	-
-	1-1/4 "	R4133581	R4133582	R4166923	NR	-	-	-	-
-	1-1/4 "	R4133581	R4133582	R4166923	NR	-	-	-	-
-	1-1/4 "	R4133581	R4133582	R4166923	NR	-	-	-	-
-	1-1/4 "	R4133581	R4133582	R4166923	NR	-	-	-	-
-	1-1/4 "	R4133581	R4133582	R4166923	NR	-	-	-	-
-	1-1/4 "	R4133581	R4133582	R4166923	NR	-	-	-	-
-	1-1/4 "	R4133581	R4133582	R4166923	NR	-	-	-	-
-	1-1/2 "	R4133580	R4133580	Discontinued	NR	-	-	-	-
-	1-1/2 "	R4133580	R4133580	Discontinued	NR	-	-	-	-
-	1-1/2 "	R4133580	R4133580	Discontinued	NR	-	-	-	-
-	1-1/2 "	R4133580	R4133580	Discontinued	NR	-	-	-	-
-	1-1/2 "	R4133580	R4133580	Discontinued	NR	-	-	-	-
-	1-1/2 "	R4133580	R4133580	Discontinued	NR	-	-	-	-
-	1-5/8 "	R4133338	R4133338	R4166689	NR	-	-	-	-
-	1-5/8 "	R4133338	R4133338	R4166689	NR	-	-	-	-
-	1-5/8 "	R4133338	R4133338	R4166689	NR	-	-	-	-
-	1-5/8 "	R4133338	R4133338	R4166689	NR	-	-	-	-
-	1-5/8 "	R4133338	R4133338	R4166689	NR	-	-	-	-
-	1-5/8 "	R4133338	R4133338	R4166689	NR	-	-	-	-
-	1-5/8 "	R4133338	R4133338	R4166689	NR	-	-	-	-
-	1-5/8 "	R4133338	R4133338	R4166689	NR	-	-	-	-
-	1-3/4 "	R4133400	R4133400	R4166917	NR	-	-	-	-
-	1-3/4 "	R4133400	R4133400	R4166917	NR	-	-	-	-
-	1-1/4 "	R4133581	R4133582	R4166923	NR	-	-	-	-
-	1-1/4 "	R4133581	R4133582	R4166923	NR	-	-	-	-
-		-	-	-	-	-	-	-	-
-		-	-	-	-	-	-	-	-
-	1-1/4 "	R4133581	R4133582	R4166923	NR	-	-	-	-

MAKE MODEL YEAR AXLE CODE AXLE WEIGHT	AXLE & BRK. TYPE	BRK. MFG.	BRAKE SIZE	FMSI	MERITOR DISC PAD OR BRAKE SHOE	MERITOR GUIDE PIN OR RETURN SPRING KIT	MERITOR CALIPER HWD. KIT OR RETURN SPRING KIT	MERITOR ADJUSTER KIT (LEFT WHEEL)	MERITOR ADJUSTER KIT (RIGHT WHEEL)
ITE(Cont.)									
170, 1700, 1710, 1723, 1724, 1750, 1753, 1754 SERIES CONVENTIONAL CAB, SCHOOL BUS, TILT CAB(Cont.)									
1966	Fm	WG	15 " x 3-1/2 "	1280 - 463	R700463	R40H521	R40H9201	R40H3524	R40H3524
C1710, C1750 Cargostar Tilt Cab FA48, 68, 70, 72	Fa	WG	14 " x 2-1/2 "	1294A - 325	N/A	R40H521	R40H9237	R40H3502	R40H3503
	Fm	WG	14 " x 2-1/2 "	1294 - 296	N/A	R40H521	R40H9201	R40H3524	R40H3524
C1710, C1750 Cargostar Tilt Cab FA71, 73, 101	Fa	WG	15 " x 3 "	1245C - 321	R700321	R40H521	R40H9237	R40H3502	R40H3503
	Fa	WG	15 " x 3-1/2 "	1280B - 322	R464004	R40H521	R40H9237	R40H3502	R40H3503
	Fm	WG	15 " x 3 "	1245A - 235	R700235	R40H521	R40H9201	R40H3524	R40H3524
	Fm	WG	15 " x 3-1/2 "	1280 - 463	R700463	R40H521	R40H9201	R40H3524	R40H3524
C1710, C1750 Cargostar Tilt Cab FA74	Fa	WG	15 " x 3 "	1245C - 321	R700321	R40H521	R40H9237	R40H3502	R40H3503
	Fm	WG	15 " x 3 "	1245A - 235	R700235	R40H521	R40H9201	R40H3524	R40H3524
C1710, C1750 Cargostar Tilt Cab FA78, 81	Fa	WG	15 " x 3 "	1245C - 321	R700321	R40H521	R40H9237	R40H3502	R40H3503
C1710, C1750 Cargostar Tilt Cab FA89, 91, 98	Fa	WG	15 " x 3 "	1245C - 321	R700321	R40H521	R40H9237	R40H3502	R40H3503
	Fm	WG	15 " x 3 "	1245A - 235	R700235	R40H521	R40H9201	R40H3524	R40H3524
C1710, C1750 Cargostar Tilt Cab RA184	Ra	WG	15 " x 4 "	4645A - 376	Discontinued	R40H597	R40H9200	R40H3540	R40H3541
	Rm	WG	15 " x 4 "	4645A - 376	Discontinued	R40H597	R40H9200	R40H3518	R404148
C1710, C1750 Cargostar Tilt Cab RA25, 184	Ra	WG	15 " x 5 "	1252 - 346	R700346	R40H597	R40H9200	R40H3540	R40H3541
	Rm	WG	15 " x 5 "	1252 - 346	R700346	R40H597	R40H9200	R40H3518	R404148
C1710, C1750 Cargostar Tilt Cab RA29, 30, 187	Ra	WG	15 " x 5 "	1252 - 346	R700346	R40H597	R40H9200	R40H3540	R40H3541
	Rm	WG	15 " x 5 "	1252 - 346	R700346	R40H597	R40H9200	R40H3518	R404148
C1710, C1750 Cargostar Tilt Cab RA30, 187	Ra	WG	16 " x 5 "	1254 - 385	N/A	R40H597	R40H9200	NLA	NLA
	Rm	WG	16 " x 5 "	1254 - 385	N/A	R40H597	R40H9200	R404149	R404150
C1710, C1750 Cargostar Tilt Cab RA30, 39, 44, 186, 189	Ra	WG	15 " x 6 "	4596 - 381	R700381	R40H597	R40H9200	R40H3540	R40H3541
	Rm	WG	15 " x 6 "	4596 - 381	R700381	R40H597	R40H9200	R40H3518	R404148
C1710, C1750 Cargostar Tilt Cab RA39, 199	Ra	WG	15 " x 7 "	4597 - 383	R700383	R40H597	R40H9200	R40H3540	R40H3541
	Rm	WG	15 " x 7 "	4597 - 383	R700383	R40H597	R40H9200	R40H3518	R404148
C1710, C1750 Cargostar Tilt Cab RA44, 186	Ra	WG	15 " x 7 "	4597 - 383	R700383	R40H597	R40H9200	NLA	NLA
	Rm	WG	15 " x 7 "	4597 - 383	R700383	R40H597	R40H9200	R40H3518	R404148
C1710, C1750 Cargostar Tilt Cab RA47, 57	Ra	WG	16 " x 6 "	1255 - 386	N/A	R40H597	R40H9200	NLA	NLA
	Rm	WG	16 " x 6 "	1255 - 386	N/A	R40H597	R40H9200	R404149	R404150
S1723, S1753 School Bus FA109, 208	Fa	WG	15 " x 3 "	1245C - 321	R700321	R40H521	R40H9237	R40H3502	R40H3503
	Fm	WG	15 " x 3 "	1245A - 235	R700235	R40H521	R40H9201	R40H3524	R40H3524
S1723, S1753 School Bus FA118, 127, 139	Fa	WG	15 " x 5 "	1345A - 491	N/A	R40H521	R40H9237	R40H3502	R40H3503
	Fm	WG	15 " x 5 "	1345 - 490	N/A	R40H521	R40H9201	R40H3524	R40H3524
S1723, S1753 School Bus FA208	Fa	WG	15 " x 3-1/2 "	1280B - 322	R464004	R40H521	R40H9237	R40H3502	R40H3503

MERITOR DRUM OR ROTOR NO.	CALIPER OR CYLINDER BORE SIZE	MERITOR CALIPER OR WHEEL CYLINDER (LEFT)	MERITOR CALIPER OR WHEEL CYLINDER (RIGHT)	MERITOR CALIPER OR WHEEL CYLINDER REPAIR KIT	MERITOR CALIPER PISTON	MERITOR MASTER CYLINDER	MERITOR MASTER CYLINDER KIT	MERITOR BRAKE HOSE (LEFT)	MERITOR BRAKE HOSE (RIGHT)
									ITE(Cont.)
170, 1700, 1710, 1723, 1724, 1750, 1753, 1754 SERIES CONVENTIONAL CAB, SCHOOL BUS, TILT CAB(Cont.)									
-	1-1/4 "	R4133581	R4133582	R4166923	NR	-	-	-	-
-	1-1/8 "	R4133714	R4133715	R4166926	NR	-	-	-	-
-	1-1/8 "	R4133714	R4133715	R4166926	NR	-	-	-	-
-	1-1/4 "	R4133581	R4133582	R4166923	NR	-	-	-	-
-	1-1/4 "	R4133581	R4133582	R4166923	NR	-	-	-	-
-	1-1/4 "	R4133581	R4133582	R4166923	NR	-	-	-	-
-	1-1/4 "	R4133581	R4133582	R4166923	NR	-	-	-	-
-	1-1/4 "	R4133581	R4133582	R4166923	NR	-	-	-	-
-	1-1/4 "	R4133581	R4133582	R4166923	NR	-	-	-	-
-	1-1/4 "	R4133581	R4133582	R4166923	NR	-	-	-	-
-	1-1/4 "	R4133581	R4133582	R4166923	NR	-	-	-	-
-	1-1/2 "	R4133580	R4133580	Discontinued	NR	-	-	-	-
-	1-1/2 "	R4133580	R4133580	Discontinued	NR	-	-	-	-
-	1-1/2 "	R4133580	R4133580	Discontinued	NR	-	-	-	-
-	1-1/2 "	R4133580	R4133580	Discontinued	NR	-	-	-	-
-	1-1/2 "	R4133580	R4133580	Discontinued	NR	-	-	-	-
-	1-1/2 "	R4133580	R4133580	Discontinued	NR	-	-	-	-
-	1-5/8 "	R4133338	R4133338	R4166689	NR	-	-	-	-
-	1-5/8 "	R4133338	R4133338	R4166689	NR	-	-	-	-
-	1-5/8 "	R4133338	R4133338	R4166689	NR	-	-	-	-
-	1-5/8 "	R4133338	R4133338	R4166689	NR	-	-	-	-
-	1-5/8 "	R4133338	R4133338	R4166689	NR	-	-	-	-
-	1-5/8 "	R4133338	R4133338	R4166689	NR	-	-	-	-
-	1-5/8 "	R4133338	R4133338	R4166689	NR	-	-	-	-
-	1-5/8 "	R4133338	R4133338	R4166689	NR	-	-	-	-
-	1-3/4 "	R4133400	R4133400	R4166917	NR	-	-	-	-
-	1-3/4 "	R4133400	R4133400	R4166917	NR	-	-	-	-
-	1-1/4 "	R4133581	R4133582	R4166923	NR	-	-	-	-
-	1-1/4 "	R4133581	R4133582	R4166923	NR	-	-	-	-
-		-	-	-	-	-	-	-	-
-		-	-	-	-	-	-	-	-
-	1-1/4 "	R4133581	R4133582	R4166923	NR	-	-	-	-

MAKE MODEL YEAR AXLE CODE AXLE WEIGHT	AXLE & BRK. TYPE	BRK. MFG.	BRAKE SIZE	FMSI	MERITOR DISC PAD OR BRAKE SHOE	MERITOR GUIDE PIN OR RETURN SPRING KIT	MERITOR CALIPER HWD. KIT OR RETURN SPRING KIT	MERITOR ADJUSTER KIT (LEFT WHEEL)	MERITOR ADJUSTER KIT (RIGHT WHEEL)
ITE(Cont.)									
170, 1700, 1710, 1723, 1724, 1750, 1753, 1754 SERIES CONVENTIONAL CAB, SCHOOL BUS, TILT CAB(Cont.)									
1966 S1723, S1753 School Bus FA208	Fm	WG	15 " x 3-1/2 "	1280 - 463	R700463	R40H521	R40H9201	R40H3524	R40H3524
S1723, S1753 School Bus FA48, 68, 70, 72	Fa	WG	14 " x 2-1/2 "	1294A - 325	N/A	R40H521	R40H9237	R40H3502	R40H3503
	Fm	WG	14 " x 2-1/2 "	1294 - 296	N/A	R40H521	R40H9201	R40H3524	R40H3524
S1723, S1753 School Bus FA71, 73, 101	Fa	WG	15 " x 3 "	1245C - 321	R700321	R40H521	R40H9237	R40H3502	R40H3503
	Fa	WG	15 " x 3-1/2 "	1280B - 322	R464004	R40H521	R40H9237	R40H3502	R40H3503
	Fm	WG	15 " x 3 "	1245A - 235	R700235	R40H521	R40H9201	R40H3524	R40H3524
	Fm	WG	15 " x 3-1/2 "	1280 - 463	R700463	R40H521	R40H9201	R40H3524	R40H3524
S1723, S1753 School Bus FA74	Fa	WG	15 " x 3 "	1245C - 321	R700321	R40H521	R40H9237	R40H3502	R40H3503
	Fm	WG	15 " x 3 "	1245A - 235	R700235	R40H521	R40H9201	R40H3524	R40H3524
S1723, S1753 School Bus FA78, 81	Fa	WG	15 " x 3 "	1245C - 321	R700321	R40H521	R40H9237	R40H3502	R40H3503
S1723, S1753 School Bus FA89, 91, 98	Fa	WG	15 " x 3 "	1245C - 321	R700321	R40H521	R40H9237	R40H3502	R40H3503
	Fm	WG	15 " x 3 "	1245A - 235	R700235	R40H521	R40H9201	R40H3524	R40H3524
S1723, S1753 School Bus RA184	Ra	WG	15 " x 4 "	4645A - 376	Discontinued	R40H597	R40H9200	R40H3540	R40H3541
	Rm	WG	15 " x 4 "	4645A - 376	Discontinued	R40H597	R40H9200	R40H3518	R404148
S1723, S1753 School Bus RA25, 184	Ra	WG	15 " x 5 "	1252 - 346	R700346	R40H597	R40H9200	R40H3540	R40H3541
	Rm	WG	15 " x 5 "	1252 - 346	R700346	R40H597	R40H9200	R40H3518	R404148
S1723, S1753 School Bus RA29, 30, 187	Ra	WG	15 " x 5 "	1252 - 346	R700346	R40H597	R40H9200	R40H3540	R40H3541
	Rm	WG	15 " x 5 "	1252 - 346	R700346	R40H597	R40H9200	R40H3518	R404148
S1723, S1753 School Bus RA30, 187	Ra	WG	16 " x 5 "	1254 - 385	N/A	R40H597	R40H9200	NLA	NLA
	Rm	WG	16 " x 5 "	1254 - 385	N/A	R40H597	R40H9200	R404149	R404150
S1723, S1753 School Bus RA30, 39, 44, 186, 189	Ra	WG	15 " x 6 "	4596 - 381	R700381	R40H597	R40H9200	R40H3540	R40H3541
	Rm	WG	15 " x 6 "	4596 - 381	R700381	R40H597	R40H9200	R40H3518	R404148
S1723, S1753 School Bus RA39, 199	Ra	WG	15 " x 7 "	4597 - 383	R700383	R40H597	R40H9200	R40H3540	R40H3541
	Rm	WG	15 " x 7 "	4597 - 383	R700383	R40H597	R40H9200	R40H3518	R404148
S1723, S1753 School Bus RA44, 186	Ra	WG	15 " x 7 "	4597 - 383	R700383	R40H597	R40H9200	NLA	NLA
	Rm	WG	15 " x 7 "	4597 - 383	R700383	R40H597	R40H9200	R40H3518	R404148
S1723, S1753 School Bus RA47, 57	Ra	WG	16 " x 6 "	1255 - 386	N/A	R40H597	R40H9200	NLA	NLA
	Rm	WG	16 " x 6 "	1255 - 386	N/A	R40H597	R40H9200	R404149	R404150
S1724, S1754 Conventional FA109, 208	Fa	WG	15 " x 3 "	1245C - 321	R700321	R40H521	R40H9237	R40H3502	R40H3503
	Fm	WG	15 " x 3 "	1245A - 235	R700235	R40H521	R40H9201	R40H3524	R40H3524
S1724, S1754 Conventional FA118, 127, 139	Fa	WG	15 " x 5 "	1345A - 491	N/A	R40H521	R40H9237	R40H3502	R40H3503
	Fm	WG	15 " x 5 "	1345 - 490	N/A	R40H521	R40H9201	R40H3524	R40H3524
S1724, S1754 Conventional FA208	Fa	WG	15 " x 3-1/2 "	1280B - 322	R464004	R40H521	R40H9237	R40H3502	R40H3503
	Fm	WG	15 " x 3-1/2 "	1280 - 463	R700463	R40H521	R40H9201	R40H3524	R40H3524
S1724, S1754 Conventional FA48, 68, 70, 72	Fa	WG	14 " x 2-1/2 "	1294A - 325	N/A	R40H521	R40H9237	R40H3502	R40H3503
	Fm	WG	14 " x 2-1/2 "	1294 - 296	N/A	R40H521	R40H9201	R40H3524	R40H3524
S1724, S1754 Conventional FA71, 73, 101	Fa	WG	15 " x 3 "	1245C - 321	R700321	R40H521	R40H9237	R40H3502	R40H3503
	Fa	WG	15 " x 3-1/2 "	1280B - 322	R464004	R40H521	R40H9237	R40H3502	R40H3503
	Fm	WG	15 " x 3 "	1245A - 235	R700235	R40H521	R40H9201	R40H3524	R40H3524
	Fm	WG	15 " x 3-1/2 "	1280 - 463	R700463	R40H521	R40H9201	R40H3524	R40H3524
S1724, S1754 Conventional FA74	Fa	WG	15 " x 3 "	1245C - 321	R700321	R40H521	R40H9237	R40H3502	R40H3503

MERITOR DRUM OR ROTOR NO.	CALIPER OR CYLINDER BORE SIZE	MERITOR CALIPER OR WHEEL CYLINDER (LEFT)	MERITOR CALIPER OR WHEEL CYLINDER (RIGHT)	MERITOR CALIPER OR WHEEL CYLINDER REPAIR KIT	MERITOR CALIPER PISTON	MERITOR MASTER CYLINDER	MERITOR MASTER CYLINDER KIT	MERITOR BRAKE HOSE (LEFT)	MERITOR BRAKE HOSE (RIGHT)
									ITE(Cont.)
170, 1700, 1710, 1723, 1724, 1750, 1753, 1754 SERIES CONVENTIONAL CAB, SCHOOL BUS, TILT CAB(Cont.)									
-	1-1/4 "	R4133581	R4133582	R4166923	NR	-	-	-	-
-	1-1/8 "	R4133714	R4133715	R4166926	NR	-	-	-	-
-	1-1/8 "	R4133714	R4133715	R4166926	NR	-	-	-	-
-	1-1/4 "	R4133581	R4133582	R4166923	NR	-	-	-	-
-	1-1/4 "	R4133581	R4133582	R4166923	NR	-	-	-	-
-	1-1/4 "	R4133581	R4133582	R4166923	NR	-	-	-	-
-	1-1/4 "	R4133581	R4133582	R4166923	NR	-	-	-	-
-	1-1/4 "	R4133581	R4133582	R4166923	NR	-	-	-	-
-	1-1/4 "	R4133581	R4133582	R4166923	NR	-	-	-	-
-	1-1/4 "	R4133581	R4133582	R4166923	NR	-	-	-	-
-	1-1/4 "	R4133581	R4133582	R4166923	NR	-	-	-	-
-	1-1/2 "	R4133580	R4133580	Discontinued	NR	-	-	-	-
-	1-1/2 "	R4133580	R4133580	Discontinued	NR	-	-	-	-
-	1-1/2 "	R4133580	R4133580	Discontinued	NR	-	-	-	-
-	1-1/2 "	R4133580	R4133580	Discontinued	NR	-	-	-	-
-	1-1/2 "	R4133580	R4133580	Discontinued	NR	-	-	-	-
-	1-1/2 "	R4133580	R4133580	Discontinued	NR	-	-	-	-
-	1-5/8 "	R4133338	R4133338	R4166689	NR	-	-	-	-
-	1-5/8 "	R4133338	R4133338	R4166689	NR	-	-	-	-
-	1-5/8 "	R4133338	R4133338	R4166689	NR	-	-	-	-
-	1-5/8 "	R4133338	R4133338	R4166689	NR	-	-	-	-
-	1-5/8 "	R4133338	R4133338	R4166689	NR	-	-	-	-
-	1-5/8 "	R4133338	R4133338	R4166689	NR	-	-	-	-
-	1-5/8 "	R4133338	R4133338	R4166689	NR	-	-	-	-
-	1-5/8 "	R4133338	R4133338	R4166689	NR	-	-	-	-
-	1-3/4 "	R4133400	R4133400	R4166917	NR	-	-	-	-
-	1-3/4 "	R4133400	R4133400	R4166917	NR	-	-	-	-
-	1-1/4 "	R4133581	R4133582	R4166923	NR	-	-	-	-
-	1-1/4 "	R4133581	R4133582	R4166923	NR	-	-	-	-
-		-	-	-	-	-	-	-	-
-		-	-	-	-	-	-	-	-
-	1-1/4 "	R4133581	R4133582	R4166923	NR	-	-	-	-
-	1-1/4 "	R4133581	R4133582	R4166923	NR	-	-	-	-
-	1-1/8 "	R4133714	R4133715	R4166926	NR	-	-	-	-
-	1-1/8 "	R4133714	R4133715	R4166926	NR	-	-	-	-
-	1-1/4 "	R4133581	R4133582	R4166923	NR	-	-	-	-
-	1-1/4 "	R4133581	R4133582	R4166923	NR	-	-	-	-
-	1-1/4 "	R4133581	R4133582	R4166923	NR	-	-	-	-
-	1-1/4 "	R4133581	R4133582	R4166923	NR	-	-	-	-
-	1-1/4 "	R4133581	R4133582	R4166923	NR	-	-	-	-

MAKE MODEL YEAR AXLE CODE AXLE WEIGHT	AXLE & BRK. TYPE	BRK. MFG.	BRAKE SIZE	FMSI	MERITOR DISC PAD OR BRAKE SHOE	MERITOR GUIDE PIN OR RETURN SPRING KIT	MERITOR CALIPER HWD. KIT OR RETURN SPRING KIT	MERITOR ADJUSTER KIT (LEFT WHEEL)	MERITOR ADJUSTER KIT (RIGHT WHEEL)
ITE(Cont.)									
170, 1700, 1710, 1723, 1724, 1750, 1753, 1754 SERIES CONVENTIONAL CAB, SCHOOL BUS, TILT CAB(Cont.)									
1966									
	Fm	WG	15 " x 3 "	1245A - 235	R700235	R40H521	R40H9201	R40H3524	R40H3524
S1724, S1754 Conventional									
FA78, 81	Fa	WG	15 " x 3 "	1245C - 321	R700321	R40H521	R40H9237	R40H3502	R40H3503
S1724, S1754 Conventional									
FA89, 91, 98	Fa	WG	15 " x 3 "	1245C - 321	R700321	R40H521	R40H9237	R40H3502	R40H3503
	Fm	WG	15 " x 3 "	1245A - 235	R700235	R40H521	R40H9201	R40H3524	R40H3524
S1724, S1754 Conventional									
RA184	Ra	WG	15 " x 4 "	4645A - 376	Discontinued	R40H597	R40H9200	R40H3540	R40H3541
	Rm	WG	15 " x 4 "	4645A - 376	Discontinued	R40H597	R40H9200	R40H3518	R404148
S1724, S1754 Conventional									
RA25, 184	Ra	WG	15 " x 5 "	1252 - 346	R700346	R40H597	R40H9200	R40H3540	R40H3541
	Rm	WG	15 " x 5 "	1252 - 346	R700346	R40H597	R40H9200	R40H3518	R404148
S1724, S1754 Conventional									
RA29, 30, 187	Ra	WG	15 " x 5 "	1252 - 346	R700346	R40H597	R40H9200	R40H3540	R40H3541
	Rm	WG	15 " x 5 "	1252 - 346	R700346	R40H597	R40H9200	R40H3518	R404148
S1724, S1754 Conventional									
RA30, 187	Ra	WG	16 " x 5 "	1254 - 385	N/A	R40H597	R40H9200	NLA	NLA
	Rm	WG	16 " x 5 "	1254 - 385	N/A	R40H597	R40H9200	R404149	R404150
S1724, S1754 Conventional									
RA30, 39, 44, 186, 189	Ra	WG	15 " x 6 "	4596 - 381	R700381	R40H597	R40H9200	R40H3540	R40H3541
	Rm	WG	15 " x 6 "	4596 - 381	R700381	R40H597	R40H9200	R40H3518	R404148
S1724, S1754 Conventional									
RA39, 199	Ra	WG	15 " x 7 "	4597 - 383	R700383	R40H597	R40H9200	R40H3540	R40H3541
	Rm	WG	15 " x 7 "	4597 - 383	R700383	R40H597	R40H9200	R40H3518	R404148
S1724, S1754 Conventional									
RA44, 186	Ra	WG	15 " x 7 "	4597 - 383	R700383	R40H597	R40H9200	NLA	NLA
	Rm	WG	15 " x 7 "	4597 - 383	R700383	R40H597	R40H9200	R40H3518	R404148
S1724, S1754 Conventional									
RA47, 57	Ra	WG	16 " x 6 "	1255 - 386	N/A	R40H597	R40H9200	NLA	NLA
	Rm	WG	16 " x 6 "	1255 - 386	N/A	R40H597	R40H9200	R404149	R404150
1965									
C1710, C1750 Cargostar Tilt Cab									
FA109, 208	Fa	WG	15 " x 3 "	1245C - 321	R700321	R40H521	R40H9237	R40H3502	R40H3503
	Fm	WG	15 " x 3 "	1245A - 235	R700235	R40H521	R40H9201	R40H3524	R40H3524
C1710, C1750 Cargostar Tilt Cab									
FA118, 127, 139	Fa	WG	15 " x 5 "	1345A - 491	N/A	R40H521	R40H9237	R40H3502	R40H3503
	Fm	WG	15 " x 5 "	1345 - 490	N/A	R40H521	R40H9201	R40H3524	R40H3524
C1710, C1750 Cargostar Tilt Cab									
FA208	Fa	WG	15 " x 3-1/2 "	1280B - 322	R464004	R40H521	R40H9237	R40H3502	R40H3503
	Fm	WG	15 " x 3-1/2 "	1280 - 463	R700463	R40H521	R40H9201	R40H3524	R40H3524
C1710, C1750 Cargostar Tilt Cab									
FA48, 68, 70, 72	Fa	WG	14 " x 2-1/2 "	1294A - 325	N/A	R40H521	R40H9237	R40H3502	R40H3503
	Fm	WG	14 " x 2-1/2 "	1294 - 296	N/A	R40H521	R40H9201	R40H3524	R40H3524
C1710, C1750 Cargostar Tilt Cab									
FA71, 73, 101	Fa	WG	15 " x 3 "	1245C - 321	R700321	R40H521	R40H9237	R40H3502	R40H3503
	Fa	WG	15 " x 3-1/2 "	1280B - 322	R464004	R40H521	R40H9237	R40H3502	R40H3503
	Fm	WG	15 " x 3 "	1245A - 235	R700235	R40H521	R40H9201	R40H3524	R40H3524
	Fm	WG	15 " x 3-1/2 "	1280 - 463	R700463	R40H521	R40H9201	R40H3524	R40H3524
C1710, C1750 Cargostar Tilt Cab									
FA74	Fa	WG	15 " x 3 "	1245C - 321	R700321	R40H521	R40H9237	R40H3502	R40H3503
	Fm	WG	15 " x 3 "	1245A - 235	R700235	R40H521	R40H9201	R40H3524	R40H3524
C1710, C1750 Cargostar Tilt Cab									
FA78, 81	Fa	WG	15 " x 3 "	1245C - 321	R700321	R40H521	R40H9237	R40H3502	R40H3503
C1710, C1750 Cargostar Tilt Cab									
FA89, 91, 98	Fa	WG	15 " x 3 "	1245C - 321	R700321	R40H521	R40H9237	R40H3502	R40H3503

MERITOR DRUM OR ROTOR NO.	CALIPER OR CYLINDER BORE SIZE	MERITOR CALIPER OR WHEEL CYLINDER (LEFT)	MERITOR CALIPER OR WHEEL CYLINDER (RIGHT)	MERITOR CALIPER OR WHEEL CYLINDER REPAIR KIT	MERITOR CALIPER PISTON	MERITOR MASTER CYLINDER	MERITOR MASTER CYLINDER KIT	MERITOR BRAKE HOSE (LEFT)	MERITOR BRAKE HOSE (RIGHT)
									ITE(Cont.)
170, 1700, 1710, 1723, 1724, 1750, 1753, 1754 SERIES CONVENTIONAL CAB, SCHOOL BUS, TILT CAB(Cont.)									
-	1-1/4 "	R4133581	R4133582	R4166923	NR	-	-	-	-
-	1-1/4 "	R4133581	R4133582	R4166923	NR	-	-	-	-
-	1-1/4 "	R4133581	R4133582	R4166923	NR	-	-	-	-
-	1-1/4 "	R4133581	R4133582	R4166923	NR	-	-	-	-
-	1-1/2 "	R4133580	R4133580	Discontinued	NR	-	-	-	-
-	1-1/2 "	R4133580	R4133580	Discontinued	NR	-	-	-	-
-	1-1/2 "	R4133580	R4133580	Discontinued	NR	-	-	-	-
-	1-1/2 "	R4133580	R4133580	Discontinued	NR	-	-	-	-
-	1-1/2 "	R4133580	R4133580	Discontinued	NR	-	-	-	-
-	1-1/2 "	R4133580	R4133580	Discontinued	NR	-	-	-	-
-	1-5/8 "	R4133338	R4133338	R4166689	NR	-	-	-	-
-	1-5/8 "	R4133338	R4133338	R4166689	NR	-	-	-	-
-	1-5/8 "	R4133338	R4133338	R4166689	NR	-	-	-	-
-	1-5/8 "	R4133338	R4133338	R4166689	NR	-	-	-	-
-	1-5/8 "	R4133338	R4133338	R4166689	NR	-	-	-	-
-	1-5/8 "	R4133338	R4133338	R4166689	NR	-	-	-	-
-	1-5/8 "	R4133338	R4133338	R4166689	NR	-	-	-	-
-	1-5/8 "	R4133338	R4133338	R4166689	NR	-	-	-	-
-	1-3/4 "	R4133400	R4133400	R4166917	NR	-	-	-	-
-	1-3/4 "	R4133400	R4133400	R4166917	NR	-	-	-	-
-	1-1/4 "	R4133581	R4133582	R4166923	NR	-	-	-	-
-	1-1/4 "	R4133581	R4133582	R4166923	NR	-	-	-	-
-		-	-	-	-	-	-	-	-
-		-	-	-	-	-	-	-	-
-	1-1/4 "	R4133581	R4133582	R4166923	NR	-	-	-	-
-	1-1/4 "	R4133581	R4133582	R4166923	NR	-	-	-	-
-	1-1/8 "	R4133714	R4133715	R4166926	NR	-	-	-	-
-	1-1/8 "	R4133714	R4133715	R4166926	NR	-	-	-	-
-	1-1/4 "	R4133581	R4133582	R4166923	NR	-	-	-	-
-	1-1/4 "	R4133581	R4133582	R4166923	NR	-	-	-	-
-	1-1/4 "	R4133581	R4133582	R4166923	NR	-	-	-	-
-	1-1/4 "	R4133581	R4133582	R4166923	NR	-	-	-	-
-	1-1/4 "	R4133581	R4133582	R4166923	NR	-	-	-	-
-	1-1/4 "	R4133581	R4133582	R4166923	NR	-	-	-	-
-	1-1/4 "	R4133581	R4133582	R4166923	NR	-	-	-	-
-	1-1/4 "	R4133581	R4133582	R4166923	NR	-	-	-	-

MAKE MODEL YEAR AXLE CODE AXLE WEIGHT	AXLE & BRK. TYPE	BRK. MFG.	BRAKE SIZE	FMSI	MERITOR DISC PAD OR BRAKE SHOE	MERITOR GUIDE PIN OR RETURN SPRING KIT	MERITOR CALIPER HWD. KIT OR RETURN SPRING KIT	MERITOR ADJUSTER KIT (LEFT WHEEL)	MERITOR ADJUSTER KIT (RIGHT WHEEL)
ITE(Cont.)									
170, 1700, 1710, 1723, 1724, 1750, 1753, 1754 SERIES CONVENTIONAL CAB, SCHOOL BUS, TILT CAB(Cont.)									
1965	Fm	WG	15 " x 3 "	1245A - 235	R700235	R40H521	R40H9201	R40H3524	R40H3524
C1710, C1750 Cargostar Tilt Cab RA184	Ra	WG	15 " x 4 "	4645A - 376	Discontinued	R40H597	R40H9200	R40H3540	R40H3541
	Rm	WG	15 " x 4 "	4645A - 376	Discontinued	R40H597	R40H9200	R40H3518	R404148
C1710, C1750 Cargostar Tilt Cab RA25, 184	Ra	WG	15 " x 5 "	1252 - 346	R700346	R40H597	R40H9200	R40H3540	R40H3541
	Rm	WG	15 " x 5 "	1252 - 346	R700346	R40H597	R40H9200	R40H3518	R404148
C1710, C1750 Cargostar Tilt Cab RA29, 30, 187	Ra	WG	15 " x 5 "	1252 - 346	R700346	R40H597	R40H9200	R40H3540	R40H3541
	Rm	WG	15 " x 5 "	1252 - 346	R700346	R40H597	R40H9200	R40H3518	R404148
C1710, C1750 Cargostar Tilt Cab RA30, 187	Ra	WG	16 " x 5 "	1254 - 385	N/A	R40H597	R40H9200	NLA	NLA
	Rm	WG	16 " x 5 "	1254 - 385	N/A	R40H597	R40H9200	R404149	R404150
C1710, C1750 Cargostar Tilt Cab RA30, 39, 44, 186, 189	Ra	WG	15 " x 6 "	4596 - 381	R700381	R40H597	R40H9200	R40H3540	R40H3541
	Rm	WG	15 " x 6 "	4596 - 381	R700381	R40H597	R40H9200	R40H3518	R404148
C1710, C1750 Cargostar Tilt Cab RA39, 199	Ra	WG	15 " x 7 "	4597 - 383	R700383	R40H597	R40H9200	R40H3540	R40H3541
	Rm	WG	15 " x 7 "	4597 - 383	R700383	R40H597	R40H9200	R40H3518	R404148
C1710, C1750 Cargostar Tilt Cab RA44, 186	Ra	WG	15 " x 7 "	4597 - 383	R700383	R40H597	R40H9200	NLA	NLA
	Rm	WG	15 " x 7 "	4597 - 383	R700383	R40H597	R40H9200	R40H3518	R404148
C1710, C1750 Cargostar Tilt Cab RA47, 57	Ra	WG	16 " x 6 "	1255 - 386	N/A	R40H597	R40H9200	NLA	NLA
	Rm	WG	16 " x 6 "	1255 - 386	N/A	R40H597	R40H9200	R404149	R404150
S1723, S1753 School Bus FA109, 208	Fa	WG	15 " x 3 "	1245C - 321	R700321	R40H521	R40H9237	R40H3502	R40H3503
	Fm	WG	15 " x 3 "	1245A - 235	R700235	R40H521	R40H9201	R40H3524	R40H3524
S1723, S1753 School Bus FA118, 127, 139	Fa	WG	15 " x 5 "	1345A - 491	N/A	R40H521	R40H9237	R40H3502	R40H3503
	Fm	WG	15 " x 5 "	1345 - 490	N/A	R40H521	R40H9201	R40H3524	R40H3524
S1723, S1753 School Bus FA208	Fa	WG	15 " x 3-1/2 "	1280B - 322	R464004	R40H521	R40H9237	R40H3502	R40H3503
	Fm	WG	15 " x 3-1/2 "	1280 - 463	R700463	R40H521	R40H9201	R40H3524	R40H3524
S1723, S1753 School Bus FA48, 68, 70, 72	Fa	WG	14 " x 2-1/2 "	1294A - 325	N/A	R40H521	R40H9237	R40H3502	R40H3503
	Fm	WG	14 " x 2-1/2 "	1294 - 296	N/A	R40H521	R40H9201	R40H3524	R40H3524
S1723, S1753 School Bus FA71, 73, 101	Fa	WG	15 " x 3 "	1245C - 321	R700321	R40H521	R40H9237	R40H3502	R40H3503
	Fa	WG	15 " x 3-1/2 "	1280B - 322	R464004	R40H521	R40H9237	R40H3502	R40H3503
	Fm	WG	15 " x 3 "	1245A - 235	R700235	R40H521	R40H9201	R40H3524	R40H3524
	Fm	WG	15 " x 3-1/2 "	1280 - 463	R700463	R40H521	R40H9201	R40H3524	R40H3524
S1723, S1753 School Bus FA74	Fa	WG	15 " x 3 "	1245C - 321	R700321	R40H521	R40H9237	R40H3502	R40H3503
	Fm	WG	15 " x 3 "	1245A - 235	R700235	R40H521	R40H9201	R40H3524	R40H3524
S1723, S1753 School Bus FA78, 81	Fa	WG	15 " x 3 "	1245C - 321	R700321	R40H521	R40H9237	R40H3502	R40H3503
S1723, S1753 School Bus FA89, 91, 98	Fa	WG	15 " x 3 "	1245C - 321	R700321	R40H521	R40H9237	R40H3502	R40H3503
	Fm	WG	15 " x 3 "	1245A - 235	R700235	R40H521	R40H9201	R40H3524	R40H3524
S1723, S1753 School Bus RA184	Ra	WG	15 " x 4 "	4645A - 376	Discontinued	R40H597	R40H9200	R40H3540	R40H3541
	Rm	WG	15 " x 4 "	4645A - 376	Discontinued	R40H597	R40H9200	R40H3518	R404148

MERITOR DRUM OR ROTOR NO.	CALIPER OR CYLINDER BORE SIZE	MERITOR CALIPER OR WHEEL CYLINDER (LEFT)	MERITOR CALIPER OR WHEEL CYLINDER (RIGHT)	MERITOR CALIPER OR WHEEL CYLINDER REPAIR KIT	MERITOR CALIPER PISTON	MERITOR MASTER CYLINDER	MERITOR MASTER CYLINDER KIT	MERITOR BRAKE HOSE (LEFT)	MERITOR BRAKE HOSE (RIGHT)
									ITE(Cont.)
170, 1700, 1710, 1723, 1724, 1750, 1753, 1754 SERIES CONVENTIONAL CAB, SCHOOL BUS, TILT CAB(Cont.)									
-	1-1/4 "	R4133581	R4133582	R4166923	NR	-	-	-	-
-	1-1/2 "	R4133580	R4133580	Discontinued	NR	-	-	-	-
-	1-1/2 "	R4133580	R4133580	Discontinued	NR	-	-	-	-
-	1-1/2 "	R4133580	R4133580	Discontinued	NR	-	-	-	-
-	1-1/2 "	R4133580	R4133580	Discontinued	NR	-	-	-	-
-	1-1/2 "	R4133580	R4133580	Discontinued	NR	-	-	-	-
-	1-1/2 "	R4133580	R4133580	Discontinued	NR	-	-	-	-
-	1-5/8 "	R4133338	R4133338	R4166689	NR	-	-	-	-
-	1-5/8 "	R4133338	R4133338	R4166689	NR	-	-	-	-
-	1-5/8 "	R4133338	R4133338	R4166689	NR	-	-	-	-
-	1-5/8 "	R4133338	R4133338	R4166689	NR	-	-	-	-
-	1-5/8 "	R4133338	R4133338	R4166689	NR	-	-	-	-
-	1-5/8 "	R4133338	R4133338	R4166689	NR	-	-	-	-
-	1-5/8 "	R4133338	R4133338	R4166689	NR	-	-	-	-
-	1-5/8 "	R4133338	R4133338	R4166689	NR	-	-	-	-
-	1-3/4 "	R4133400	R4133400	R4166917	NR	-	-	-	-
-	1-3/4 "	R4133400	R4133400	R4166917	NR	-	-	-	-
-	1-1/4 "	R4133581	R4133582	R4166923	NR	-	-	-	-
-	1-1/4 "	R4133581	R4133582	R4166923	NR	-	-	-	-
-		-	-	-	-	-	-	-	-
-		-	-	-	-	-	-	-	-
-	1-1/4 "	R4133581	R4133582	R4166923	NR	-	-	-	-
-	1-1/4 "	R4133581	R4133582	R4166923	NR	-	-	-	-
-	1-1/8 "	R4133714	R4133715	R4166926	NR	-	-	-	-
-	1-1/8 "	R4133714	R4133715	R4166926	NR	-	-	-	-
-	1-1/4 "	R4133581	R4133582	R4166923	NR	-	-	-	-
-	1-1/4 "	R4133581	R4133582	R4166923	NR	-	-	-	-
-	1-1/4 "	R4133581	R4133582	R4166923	NR	-	-	-	-
-	1-1/4 "	R4133581	R4133582	R4166923	NR	-	-	-	-
-	1-1/4 "	R4133581	R4133582	R4166923	NR	-	-	-	-
-	1-1/4 "	R4133581	R4133582	R4166923	NR	-	-	-	-
-	1-1/4 "	R4133581	R4133582	R4166923	NR	-	-	-	-
-	1-1/4 "	R4133581	R4133582	R4166923	NR	-	-	-	-
-	1-1/4 "	R4133581	R4133582	R4166923	NR	-	-	-	-
-	1-1/2 "	R4133580	R4133580	Discontinued	NR	-	-	-	-
-	1-1/2 "	R4133580	R4133580	Discontinued	NR	-	-	-	-

MAKE MODEL YEAR AXLE CODE AXLE WEIGHT	AXLE & BRK. TYPE	BRK. MFG.	BRAKE SIZE	FMSI	MERITOR DISC PAD OR BRAKE SHOE	MERITOR GUIDE PIN OR RETURN SPRING KIT	MERITOR CALIPER HWD. KIT OR RETURN SPRING KIT	MERITOR ADJUSTER KIT (LEFT WHEEL)	MERITOR ADJUSTER KIT (RIGHT WHEEL)
ITE(Cont.)									
170, 1700, 1710, 1723, 1724, 1750, 1753, 1754 SERIES CONVENTIONAL CAB, SCHOOL BUS, TILT CAB(Cont.)									
1965 S1723, S1753 School Bus RA25, 184	Ra	WG	15 " x 5 "	1252 - 346	R700346	R40H597	R40H9200	R40H3540	R40H3541
	Rm	WG	15 " x 5 "	1252 - 346	R700346	R40H597	R40H9200	R40H3518	R404148
S1723, S1753 School Bus RA29, 30, 187	Ra	WG	15 " x 5 "	1252 - 346	R700346	R40H597	R40H9200	R40H3540	R40H3541
	Rm	WG	15 " x 5 "	1252 - 346	R700346	R40H597	R40H9200	R40H3518	R404148
S1723, S1753 School Bus RA30, 187	Ra	WG	16 " x 5 "	1254 - 385	N/A	R40H597	R40H9200	NLA	NLA
	Rm	WG	16 " x 5 "	1254 - 385	N/A	R40H597	R40H9200	R404149	R404150
S1723, S1753 School Bus RA30, 39, 44, 186, 189	Ra	WG	15 " x 6 "	4596 - 381	R700381	R40H597	R40H9200	R40H3540	R40H3541
	Rm	WG	15 " x 6 "	4596 - 381	R700381	R40H597	R40H9200	R40H3518	R404148
S1723, S1753 School Bus RA39, 199	Ra	WG	15 " x 7 "	4597 - 383	R700383	R40H597	R40H9200	R40H3540	R40H3541
	Rm	WG	15 " x 7 "	4597 - 383	R700383	R40H597	R40H9200	R40H3518	R404148
S1723, S1753 School Bus RA44, 186	Ra	WG	15 " x 7 "	4597 - 383	R700383	R40H597	R40H9200	NLA	NLA
	Rm	WG	15 " x 7 "	4597 - 383	R700383	R40H597	R40H9200	R40H3518	R404148
S1723, S1753 School Bus RA47, 57	Ra	WG	16 " x 6 "	1255 - 386	N/A	R40H597	R40H9200	NLA	NLA
	Rm	WG	16 " x 6 "	1255 - 386	N/A	R40H597	R40H9200	R404149	R404150
S1724, S1754 Conventional FA109, 208	Fa	WG	15 " x 3 "	1245C - 321	R700321	R40H521	R40H9237	R40H3502	R40H3503
	Fm	WG	15 " x 3 "	1245A - 235	R700235	R40H521	R40H9201	R40H3524	R40H3524
S1724, S1754 Conventional FA118, 127, 139	Fa	WG	15 " x 5 "	1345A - 491	N/A	R40H521	R40H9237	R40H3502	R40H3503
	Fm	WG	15 " x 5 "	1345 - 490	N/A	R40H521	R40H9201	R40H3524	R40H3524
S1724, S1754 Conventional FA208	Fa	WG	15 " x 3-1/2 "	1280B - 322	R464004	R40H521	R40H9237	R40H3502	R40H3503
	Fm	WG	15 " x 3-1/2 "	1280 - 463	R700463	R40H521	R40H9201	R40H3524	R40H3524
S1724, S1754 Conventional FA48, 68, 70, 72	Fa	WG	14 " x 2-1/2 "	1294A - 325	N/A	R40H521	R40H9237	R40H3502	R40H3503
	Fm	WG	14 " x 2-1/2 "	1294 - 296	N/A	R40H521	R40H9201	R40H3524	R40H3524
S1724, S1754 Conventional FA71, 73, 101	Fa	WG	15 " x 3 "	1245C - 321	R700321	R40H521	R40H9237	R40H3502	R40H3503
	Fa	WG	15 " x 3-1/2 "	1280B - 322	R464004	R40H521	R40H9237	R40H3502	R40H3503
	Fm	WG	15 " x 3 "	1245A - 235	R700235	R40H521	R40H9201	R40H3524	R40H3524
	Fm	WG	15 " x 3-1/2 "	1280 - 463	R700463	R40H521	R40H9201	R40H3524	R40H3524
S1724, S1754 Conventional FA74	Fa	WG	15 " x 3 "	1245C - 321	R700321	R40H521	R40H9237	R40H3502	R40H3503
	Fm	WG	15 " x 3 "	1245A - 235	R700235	R40H521	R40H9201	R40H3524	R40H3524
S1724, S1754 Conventional FA78, 81	Fa	WG	15 " x 3 "	1245C - 321	R700321	R40H521	R40H9237	R40H3502	R40H3503
S1724, S1754 Conventional FA89, 91, 98	Fa	WG	15 " x 3 "	1245C - 321	R700321	R40H521	R40H9237	R40H3502	R40H3503
	Fm	WG	15 " x 3 "	1245A - 235	R700235	R40H521	R40H9201	R40H3524	R40H3524
S1724, S1754 Conventional RA184	Ra	WG	15 " x 4 "	4645A - 376	Discontinued	R40H597	R40H9200	R40H3540	R40H3541
	Rm	WG	15 " x 4 "	4645A - 376	Discontinued	R40H597	R40H9200	R40H3518	R404148
S1724, S1754 Conventional RA25, 184	Ra	WG	15 " x 5 "	1252 - 346	R700346	R40H597	R40H9200	R40H3540	R40H3541
	Rm	WG	15 " x 5 "	1252 - 346	R700346	R40H597	R40H9200	R40H3518	R404148
S1724, S1754 Conventional RA29, 30, 187	Ra	WG	15 " x 5 "	1252 - 346	R700346	R40H597	R40H9200	R40H3540	R40H3541
	Rm	WG	15 " x 5 "	1252 - 346	R700346	R40H597	R40H9200	R40H3518	R404148
S1724, S1754 Conventional RA30, 187	Ra	WG	16 " x 5 "	1254 - 385	N/A	R40H597	R40H9200	NLA	NLA
	Rm	WG	16 " x 5 "	1254 - 385	N/A	R40H597	R40H9200	R404149	R404150
S1724, S1754 Conventional RA30, 39, 44, 186, 189	Ra	WG	15 " x 6 "	4596 - 381	R700381	R40H597	R40H9200	R40H3540	R40H3541
	Rm	WG	15 " x 6 "	4596 - 381	R700381	R40H597	R40H9200	R40H3518	R404148

MERITOR DRUM OR ROTOR NO.	CALIPER OR CYLINDER BORE SIZE	MERITOR CALIPER OR WHEEL CYLINDER (LEFT)	MERITOR CALIPER OR WHEEL CYLINDER (RIGHT)	MERITOR CALIPER OR WHEEL CYLINDER REPAIR KIT	MERITOR CALIPER PISTON	MERITOR MASTER CYLINDER	MERITOR MASTER CYLINDER KIT	MERITOR BRAKE HOSE (LEFT)	MERITOR BRAKE HOSE (RIGHT)
ITE(Cont.)									
170, 1700, 1710, 1723, 1724, 1750, 1753, 1754 SERIES CONVENTIONAL CAB, SCHOOL BUS, TILT CAB(Cont.)									
-	1-1/2 "	R4133580	R4133580	Discontinued	NR	-	-	-	-
-	1-1/2 "	R4133580	R4133580	Discontinued	NR	-	-	-	-
-	1-1/2 "	R4133580	R4133580	Discontinued	NR	-	-	-	-
-	1-1/2 "	R4133580	R4133580	Discontinued	NR	-	-	-	-
-	1-5/8 "	R4133338	R4133338	R4166689	NR	-	-	-	-
-	1-5/8 "	R4133338	R4133338	R4166689	NR	-	-	-	-
-	1-5/8 "	R4133338	R4133338	R4166689	NR	-	-	-	-
-	1-5/8 "	R4133338	R4133338	R4166689	NR	-	-	-	-
-	1-5/8 "	R4133338	R4133338	R4166689	NR	-	-	-	-
-	1-5/8 "	R4133338	R4133338	R4166689	NR	-	-	-	-
-	1-5/8 "	R4133338	R4133338	R4166689	NR	-	-	-	-
-	1-5/8 "	R4133338	R4133338	R4166689	NR	-	-	-	-
-	1-3/4 "	R4133400	R4133400	R4166917	NR	-	-	-	-
-	1-3/4 "	R4133400	R4133400	R4166917	NR	-	-	-	-
-	1-1/4 "	R4133581	R4133582	R4166923	NR	-	-	-	-
-	1-1/4 "	R4133581	R4133582	R4166923	NR	-	-	-	-
-		-	-	-	-	-	-	-	-
-		-	-	-	-	-	-	-	-
-	1-1/4 "	R4133581	R4133582	R4166923	NR	-	-	-	-
-	1-1/4 "	R4133581	R4133582	R4166923	NR	-	-	-	-
-	1-1/8 "	R4133714	R4133715	R4166926	NR	-	-	-	-
-	1-1/8 "	R4133714	R4133715	R4166926	NR	-	-	-	-
-	1-1/4 "	R4133581	R4133582	R4166923	NR	-	-	-	-
-	1-1/4 "	R4133581	R4133582	R4166923	NR	-	-	-	-
-	1-1/4 "	R4133581	R4133582	R4166923	NR	-	-	-	-
-	1-1/4 "	R4133581	R4133582	R4166923	NR	-	-	-	-
-	1-1/4 "	R4133581	R4133582	R4166923	NR	-	-	-	-
-	1-1/4 "	R4133581	R4133582	R4166923	NR	-	-	-	-
-	1-1/4 "	R4133581	R4133582	R4166923	NR	-	-	-	-
-	1-1/4 "	R4133581	R4133582	R4166923	NR	-	-	-	-
-	1-1/4 "	R4133581	R4133582	R4166923	NR	-	-	-	-
-	1-1/4 "	R4133581	R4133582	R4166923	NR	-	-	-	-
-	1-1/2 "	R4133580	R4133580	Discontinued	NR	-	-	-	-
-	1-1/2 "	R4133580	R4133580	Discontinued	NR	-	-	-	-
-	1-1/2 "	R4133580	R4133580	Discontinued	NR	-	-	-	-
-	1-1/2 "	R4133580	R4133580	Discontinued	NR	-	-	-	-
-	1-1/2 "	R4133580	R4133580	Discontinued	NR	-	-	-	-
-	1-1/2 "	R4133580	R4133580	Discontinued	NR	-	-	-	-
-	1-5/8 "	R4133338	R4133338	R4166689	NR	-	-	-	-
-	1-5/8 "	R4133338	R4133338	R4166689	NR	-	-	-	-
-	1-5/8 "	R4133338	R4133338	R4166689	NR	-	-	-	-
-	1-5/8 "	R4133338	R4133338	R4166689	NR	-	-	-	-

MAKE MODEL YEAR AXLE CODE AXLE WEIGHT	AXLE & BRK. TYPE	BRK. MFG.	BRAKE SIZE	FMSI	MERITOR DISC PAD OR BRAKE SHOE	MERITOR GUIDE PIN OR RETURN SPRING KIT	MERITOR CALIPER HWD. KIT OR RETURN SPRING KIT	MERITOR ADJUSTER KIT (LEFT WHEEL)	MERITOR ADJUSTER KIT (RIGHT WHEEL)
ITE(Cont.)									
170, 1700, 1710, 1723, 1724, 1750, 1753, 1754 SERIES CONVENTIONAL CAB, SCHOOL BUS, TILT CAB(Cont.)									
1965 S1724, S1754 Conventional RA39, 199	Ra	WG	15 " x 7 "	4597 - 383	R700383	R40H597	R40H9200	R40H3540	R40H3541
	Rm	WG	15 " x 7 "	4597 - 383	R700383	R40H597	R40H9200	R40H3518	R404148
S1724, S1754 Conventional RA44, 186	Ra	WG	15 " x 7 "	4597 - 383	R700383	R40H597	R40H9200	NLA	NLA
	Rm	WG	15 " x 7 "	4597 - 383	R700383	R40H597	R40H9200	R40H3518	R404148
S1724, S1754 Conventional RA47, 57	Ra	WG	16 " x 6 "	1255 - 386	N/A	R40H597	R40H9200	NLA	NLA
	Rm	WG	16 " x 6 "	1255 - 386	N/A	R40H597	R40H9200	R404149	R404150
1964 C1710, C1750 Cargostar Tilt Cab FA109, 208	Fa	WG	15 " x 3 "	1245C - 321	R700321	R40H521	R40H9237	R40H3502	R40H3503
	Fm	WG	15 " x 3 "	1245A - 235	R700235	R40H521	R40H9201	R40H3524	R40H3524
C1710, C1750 Cargostar Tilt Cab FA118, 127, 139	Fa	WG	15 " x 5 "	1345A - 491	N/A	R40H521	R40H9237	R40H3502	R40H3503
	Fm	WG	15 " x 5 "	1345 - 490	N/A	R40H521	R40H9201	R40H3524	R40H3524
C1710, C1750 Cargostar Tilt Cab FA208	Fa	WG	15 " x 3-1/2 "	1280B - 322	R464004	R40H521	R40H9237	R40H3502	R40H3503
	Fm	WG	15 " x 3-1/2 "	1280 - 463	R700463	R40H521	R40H9201	R40H3524	R40H3524
C1710, C1750 Cargostar Tilt Cab FA48, 68, 70, 72	Fa	WG	14 " x 2-1/2 "	1294A - 325	N/A	R40H521	R40H9237	R40H3502	R40H3503
	Fm	WG	14 " x 2-1/2 "	1294 - 296	N/A	R40H521	R40H9201	R40H3524	R40H3524
C1710, C1750 Cargostar Tilt Cab FA71, 73, 101	Fa	WG	15 " x 3 "	1245C - 321	R700321	R40H521	R40H9237	R40H3502	R40H3503
	Fa	WG	15 " x 3-1/2 "	1280B - 322	R464004	R40H521	R40H9237	R40H3502	R40H3503
	Fm	WG	15 " x 3 "	1245A - 235	R700235	R40H521	R40H9201	R40H3524	R40H3524
	Fm	WG	15 " x 3-1/2 "	1280 - 463	R700463	R40H521	R40H9201	R40H3524	R40H3524
C1710, C1750 Cargostar Tilt Cab FA74	Fa	WG	15 " x 3 "	1245C - 321	R700321	R40H521	R40H9237	R40H3502	R40H3503
	Fm	WG	15 " x 3 "	1245A - 235	R700235	R40H521	R40H9201	R40H3524	R40H3524
C1710, C1750 Cargostar Tilt Cab FA78, 81	Fa	WG	15 " x 3 "	1245C - 321	R700321	R40H521	R40H9237	R40H3502	R40H3503
C1710, C1750 Cargostar Tilt Cab FA89, 91, 98	Fa	WG	15 " x 3 "	1245C - 321	R700321	R40H521	R40H9237	R40H3502	R40H3503
	Fm	WG	15 " x 3 "	1245A - 235	R700235	R40H521	R40H9201	R40H3524	R40H3524
C1710, C1750 Cargostar Tilt Cab RA184	Ra	WG	15 " x 4 "	4645A - 376	Discontinued	R40H597	R40H9200	R40H3540	R40H3541
	Rm	WG	15 " x 4 "	4645A - 376	Discontinued	R40H597	R40H9200	R40H3518	R404148
C1710, C1750 Cargostar Tilt Cab RA25, 184	Ra	WG	15 " x 5 "	1252 - 346	R700346	R40H597	R40H9200	R40H3540	R40H3541
	Rm	WG	15 " x 5 "	1252 - 346	R700346	R40H597	R40H9200	R40H3518	R404148
C1710, C1750 Cargostar Tilt Cab RA29, 30, 187	Ra	WG	15 " x 5 "	1252 - 346	R700346	R40H597	R40H9200	R40H3540	R40H3541
	Rm	WG	15 " x 5 "	1252 - 346	R700346	R40H597	R40H9200	R40H3518	R404148
C1710, C1750 Cargostar Tilt Cab RA30, 187	Ra	WG	16 " x 5 "	1254 - 385	N/A	R40H597	R40H9200	NLA	NLA
	Rm	WG	16 " x 5 "	1254 - 385	N/A	R40H597	R40H9200	R404149	R404150
C1710, C1750 Cargostar Tilt Cab RA30, 39, 44, 186, 189	Ra	WG	15 " x 6 "	4596 - 381	R700381	R40H597	R40H9200	R40H3540	R40H3541

MERITOR DRUM OR ROTOR NO.	CALIPER OR CYLINDER BORE SIZE	MERITOR CALIPER OR WHEEL CYLINDER (LEFT)	MERITOR CALIPER OR WHEEL CYLINDER (RIGHT)	MERITOR CALIPER OR WHEEL CYLINDER REPAIR KIT	MERITOR CALIPER PISTON	MERITOR MASTER CYLINDER	MERITOR MASTER CYLINDER KIT	MERITOR BRAKE HOSE (LEFT)	MERITOR BRAKE HOSE (RIGHT)
									ITE(Cont.)
170, 1700, 1710, 1723, 1724, 1750, 1753, 1754 SERIES CONVENTIONAL CAB, SCHOOL BUS, TILT CAB(Cont.)									
-	1-5/8 "	R4133338	R4133338	R4166689	NR	-	-	-	-
-	1-5/8 "	R4133338	R4133338	R4166689	NR	-	-	-	-
-	1-5/8 "	R4133338	R4133338	R4166689	NR	-	-	-	-
-	1-5/8 "	R4133338	R4133338	R4166689	NR	-	-	-	-
-	1-3/4 "	R4133400	R4133400	R4166917	NR	-	-	-	-
-	1-3/4 "	R4133400	R4133400	R4166917	NR	-	-	-	-
-	1-1/4 "	R4133581	R4133582	R4166923	NR	-	-	-	-
-	1-1/4 "	R4133581	R4133582	R4166923	NR	-	-	-	-
-		-	-	-	-	-	-	-	-
-		-	-	-	-	-	-	-	-
-	1-1/4 "	R4133581	R4133582	R4166923	NR	-	-	-	-
-	1-1/4 "	R4133581	R4133582	R4166923	NR	-	-	-	-
-	1-1/8 "	R4133714	R4133715	R4166926	NR	-	-	-	-
-	1-1/8 "	R4133714	R4133715	R4166926	NR	-	-	-	-
-	1-1/4 "	R4133581	R4133582	R4166923	NR	-	-	-	-
-	1-1/4 "	R4133581	R4133582	R4166923	NR	-	-	-	-
-	1-1/4 "	R4133581	R4133582	R4166923	NR	-	-	-	-
-	1-1/4 "	R4133581	R4133582	R4166923	NR	-	-	-	-
-	1-1/4 "	R4133581	R4133582	R4166923	NR	-	-	-	-
-	1-1/4 "	R4133581	R4133582	R4166923	NR	-	-	-	-
-	1-1/4 "	R4133581	R4133582	R4166923	NR	-	-	-	-
-	1-1/4 "	R4133581	R4133582	R4166923	NR	-	-	-	-
-	1-1/4 "	R4133581	R4133582	R4166923	NR	-	-	-	-
-	1-1/2 "	R4133580	R4133580	Discontinued	NR	-	-	-	-
-	1-1/2 "	R4133580	R4133580	Discontinued	NR	-	-	-	-
-	1-1/2 "	R4133580	R4133580	Discontinued	NR	-	-	-	-
-	1-1/2 "	R4133580	R4133580	Discontinued	NR	-	-	-	-
-	1-1/2 "	R4133580	R4133580	Discontinued	NR	-	-	-	-
-	1-1/2 "	R4133580	R4133580	Discontinued	NR	-	-	-	-
-	1-5/8 "	R4133338	R4133338	R4166689	NR	-	-	-	-
-	1-5/8 "	R4133338	R4133338	R4166689	NR	-	-	-	-
-	1-5/8 "	R4133338	R4133338	R4166689	NR	-	-	-	-

MAKE MODEL YEAR AXLE CODE AXLE WEIGHT	AXLE & BRK. TYPE	BRK. MFG.	BRAKE SIZE	FMSI	MERITOR DISC PAD OR BRAKE SHOE	MERITOR GUIDE PIN OR RETURN SPRING KIT	MERITOR CALIPER HWD. KIT OR RETURN SPRING KIT	MERITOR ADJUSTER KIT (LEFT WHEEL)	MERITOR ADJUSTER KIT (RIGHT WHEEL)
ITE(Cont.)									
170, 1700, 1710, 1723, 1724, 1750, 1753, 1754 SERIES CONVENTIONAL CAB, SCHOOL BUS, TILT CAB(Cont.)									
1964 C1710, C1750 Cargostar Tilt Cab RA30, 39, 44, 186, 189	Rm	WG	15 " x 6 "	4596 - 381	R700381	R40H597	R40H9200	R40H3518	R404148
C1710, C1750 Cargostar Tilt Cab RA39, 199	Ra	WG	15 " x 7 "	4597 - 383	R700383	R40H597	R40H9200	R40H3540	R40H3541
	Rm	WG	15 " x 7 "	4597 - 383	R700383	R40H597	R40H9200	R40H3518	R404148
C1710, C1750 Cargostar Tilt Cab RA44, 186	Ra	WG	15 " x 7 "	4597 - 383	R700383	R40H597	R40H9200	NLA	NLA
	Rm	WG	15 " x 7 "	4597 - 383	R700383	R40H597	R40H9200	R40H3518	R404148
C1710, C1750 Cargostar Tilt Cab RA47, 57	Ra	WG	16 " x 6 "	1255 - 386	N/A	R40H597	R40H9200	NLA	NLA
	Rm	WG	16 " x 6 "	1255 - 386	N/A	R40H597	R40H9200	R404149	R404150
S1723, S1753 School Bus FA109, 208	Fa	WG	15 " x 3 "	1245C - 321	R700321	R40H521	R40H9237	R40H3502	R40H3503
	Fm	WG	15 " x 3 "	1245A - 235	R700235	R40H521	R40H9201	R40H3524	R40H3524
S1723, S1753 School Bus FA118, 127, 139	Fa	WG	15 " x 5 "	1345A - 491	N/A	R40H521	R40H9237	R40H3502	R40H3503
	Fm	WG	15 " x 5 "	1345 - 490	N/A	R40H521	R40H9201	R40H3524	R40H3524
S1723, S1753 School Bus FA208	Fa	WG	15 " x 3-1/2 "	1280B - 322	R464004	R40H521	R40H9237	R40H3502	R40H3503
	Fm	WG	15 " x 3-1/2 "	1280 - 463	R700463	R40H521	R40H9201	R40H3524	R40H3524
S1723, S1753 School Bus FA48, 68, 70, 72	Fa	WG	14 " x 2-1/2 "	1294A - 325	N/A	R40H521	R40H9237	R40H3502	R40H3503
	Fm	WG	14 " x 2-1/2 "	1294 - 296	N/A	R40H521	R40H9201	R40H3524	R40H3524
S1723, S1753 School Bus FA71, 73, 101	Fa	WG	15 " x 3 "	1245C - 321	R700321	R40H521	R40H9237	R40H3502	R40H3503
	Fa	WG	15 " x 3-1/2 "	1280B - 322	R464004	R40H521	R40H9237	R40H3502	R40H3503
	Fm	WG	15 " x 3 "	1245A - 235	R700235	R40H521	R40H9201	R40H3524	R40H3524
	Fm	WG	15 " x 3-1/2 "	1280 - 463	R700463	R40H521	R40H9201	R40H3524	R40H3524
S1723, S1753 School Bus FA74	Fa	WG	15 " x 3 "	1245C - 321	R700321	R40H521	R40H9237	R40H3502	R40H3503
	Fm	WG	15 " x 3 "	1245A - 235	R700235	R40H521	R40H9201	R40H3524	R40H3524
S1723, S1753 School Bus FA78, 81	Fa	WG	15 " x 3 "	1245C - 321	R700321	R40H521	R40H9237	R40H3502	R40H3503
S1723, S1753 School Bus FA89, 91, 98	Fa	WG	15 " x 3 "	1245C - 321	R700321	R40H521	R40H9237	R40H3502	R40H3503
	Fm	WG	15 " x 3 "	1245A - 235	R700235	R40H521	R40H9201	R40H3524	R40H3524
S1723, S1753 School Bus RA184	Ra	WG	15 " x 4 "	4645A - 376	Discontinued	R40H597	R40H9200	R40H3540	R40H3541
	Rm	WG	15 " x 4 "	4645A - 376	Discontinued	R40H597	R40H9200	R40H3518	R404148
S1723, S1753 School Bus RA25, 184	Ra	WG	15 " x 5 "	1252 - 346	R700346	R40H597	R40H9200	R40H3540	R40H3541
	Rm	WG	15 " x 5 "	1252 - 346	R700346	R40H597	R40H9200	R40H3518	R404148
S1723, S1753 School Bus RA29, 30, 187	Ra	WG	15 " x 5 "	1252 - 346	R700346	R40H597	R40H9200	R40H3540	R40H3541
	Rm	WG	15 " x 5 "	1252 - 346	R700346	R40H597	R40H9200	R40H3518	R404148
S1723, S1753 School Bus RA30, 187	Ra	WG	16 " x 5 "	1254 - 385	N/A	R40H597	R40H9200	NLA	NLA
	Rm	WG	16 " x 5 "	1254 - 385	N/A	R40H597	R40H9200	R404149	R404150
S1723, S1753 School Bus RA30, 39, 44, 186, 189	Ra	WG	15 " x 6 "	4596 - 381	R700381	R40H597	R40H9200	R40H3540	R40H3541
	Rm	WG	15 " x 6 "	4596 - 381	R700381	R40H597	R40H9200	R40H3518	R404148
S1723, S1753 School Bus RA39, 199	Ra	WG	15 " x 7 "	4597 - 383	R700383	R40H597	R40H9200	R40H3540	R40H3541
	Rm	WG	15 " x 7 "	4597 - 383	R700383	R40H597	R40H9200	R40H3518	R404148
S1723, S1753 School Bus RA44, 186	Ra	WG	15 " x 7 "	4597 - 383	R700383	R40H597	R40H9200	NLA	NLA
	Rm	WG	15 " x 7 "	4597 - 383	R700383	R40H597	R40H9200	R40H3518	R404148

MERITOR DRUM OR ROTOR NO.	CALIPER OR CYLINDER BORE SIZE	MERITOR CALIPER OR WHEEL CYLINDER (LEFT)	MERITOR CALIPER OR WHEEL CYLINDER (RIGHT)	MERITOR CALIPER OR WHEEL CYLINDER REPAIR KIT	MERITOR CALIPER PISTON	MERITOR MASTER CYLINDER	MERITOR MASTER CYLINDER KIT	MERITOR BRAKE HOSE (LEFT)	MERITOR BRAKE HOSE (RIGHT)
									ITE(Cont.)
170, 1700, 1710, 1723, 1724, 1750, 1753, 1754 SERIES CONVENTIONAL CAB, SCHOOL BUS, TILT CAB(Cont.)									
-	1-5/8 "	R4133338	R4133338	R4166689	NR	-	-	-	-
-	1-5/8 "	R4133338	R4133338	R4166689	NR	-	-	-	-
-	1-5/8 "	R4133338	R4133338	R4166689	NR	-	-	-	-
-	1-5/8 "	R4133338	R4133338	R4166689	NR	-	-	-	-
-	1-5/8 "	R4133338	R4133338	R4166689	NR	-	-	-	-
-	1-3/4 "	R4133400	R4133400	R4166917	NR	-	-	-	-
-	1-3/4 "	R4133400	R4133400	R4166917	NR	-	-	-	-
-	1-1/4 "	R4133581	R4133582	R4166923	NR	-	-	-	-
-	1-1/4 "	R4133581	R4133582	R4166923	NR	-	-	-	-
-		-	-	-	-	-	-	-	-
-		-	-	-	-	-	-	-	-
-	1-1/4 "	R4133581	R4133582	R4166923	NR	-	-	-	-
-	1-1/4 "	R4133581	R4133582	R4166923	NR	-	-	-	-
-	1-1/8 "	R4133714	R4133715	R4166926	NR	-	-	-	-
-	1-1/8 "	R4133714	R4133715	R4166926	NR	-	-	-	-
-	1-1/4 "	R4133581	R4133582	R4166923	NR	-	-	-	-
-	1-1/4 "	R4133581	R4133582	R4166923	NR	-	-	-	-
-	1-1/4 "	R4133581	R4133582	R4166923	NR	-	-	-	-
-	1-1/4 "	R4133581	R4133582	R4166923	NR	-	-	-	-
-	1-1/4 "	R4133581	R4133582	R4166923	NR	-	-	-	-
-	1-1/4 "	R4133581	R4133582	R4166923	NR	-	-	-	-
-	1-1/4 "	R4133581	R4133582	R4166923	NR	-	-	-	-
-	1-1/4 "	R4133581	R4133582	R4166923	NR	-	-	-	-
-	1-1/4 "	R4133581	R4133582	R4166923	NR	-	-	-	-
-	1-1/2 "	R4133580	R4133580	Discontinued	NR	-	-	-	-
-	1-1/2 "	R4133580	R4133580	Discontinued	NR	-	-	-	-
-	1-1/2 "	R4133580	R4133580	Discontinued	NR	-	-	-	-
-	1-1/2 "	R4133580	R4133580	Discontinued	NR	-	-	-	-
-	1-1/2 "	R4133580	R4133580	Discontinued	NR	-	-	-	-
-	1-1/2 "	R4133580	R4133580	Discontinued	NR	-	-	-	-
-	1-5/8 "	R4133338	R4133338	R4166689	NR	-	-	-	-
-	1-5/8 "	R4133338	R4133338	R4166689	NR	-	-	-	-
-	1-5/8 "	R4133338	R4133338	R4166689	NR	-	-	-	-
-	1-5/8 "	R4133338	R4133338	R4166689	NR	-	-	-	-
-	1-5/8 "	R4133338	R4133338	R4166689	NR	-	-	-	-
-	1-5/8 "	R4133338	R4133338	R4166689	NR	-	-	-	-
-	1-5/8 "	R4133338	R4133338	R4166689	NR	-	-	-	-
-	1-5/8 "	R4133338	R4133338	R4166689	NR	-	-	-	-

MAKE MODEL YEAR AXLE CODE AXLE WEIGHT	AXLE & BRK. TYPE	BRK. MFG.	BRAKE SIZE	FMSI	MERITOR DISC PAD OR BRAKE SHOE	MERITOR GUIDE PIN OR RETURN SPRING KIT	MERITOR CALIPER HWD. KIT OR RETURN SPRING KIT	MERITOR ADJUSTER KIT (LEFT WHEEL)	MERITOR ADJUSTER KIT (RIGHT WHEEL)
ITE(Cont.)									
170, 1700, 1710, 1723, 1724, 1750, 1753, 1754 SERIES CONVENTIONAL CAB, SCHOOL BUS, TILT CAB(Cont.)									
1964 S1723, S1753 School Bus RA47, 57	Ra	WG	16 " x 6 "	1255 - 386	N/A	R40H597	R40H9200	NLA	NLA
	Rm	WG	16 " x 6 "	1255 - 386	N/A	R40H597	R40H9200	R404149	R404150
S1724, S1754 Conventional FA109, 208	Fa	WG	15 " x 3 "	1245C - 321	R700321	R40H521	R40H9237	R40H3502	R40H3503
	Fm	WG	15 " x 3 "	1245A - 235	R700235	R40H521	R40H9201	R40H3524	R40H3524
S1724, S1754 Conventional FA118, 127, 139	Fa	WG	15 " x 5 "	1345A - 491	N/A	R40H521	R40H9237	R40H3502	R40H3503
	Fm	WG	15 " x 5 "	1345 - 490	N/A	R40H521	R40H9201	R40H3524	R40H3524
S1724, S1754 Conventional FA208	Fa	WG	15 " x 3-1/2 "	1280B - 322	R464004	R40H521	R40H9237	R40H3502	R40H3503
	Fm	WG	15 " x 3-1/2 "	1280 - 463	R700463	R40H521	R40H9201	R40H3524	R40H3524
S1724, S1754 Conventional FA48, 68, 70, 72	Fa	WG	14 " x 2-1/2 "	1294A - 325	N/A	R40H521	R40H9237	R40H3502	R40H3503
	Fm	WG	14 " x 2-1/2 "	1294 - 296	N/A	R40H521	R40H9201	R40H3524	R40H3524
S1724, S1754 Conventional FA71, 73, 101	Fa	WG	15 " x 3 "	1245C - 321	R700321	R40H521	R40H9237	R40H3502	R40H3503
	Fa	WG	15 " x 3-1/2 "	1280B - 322	R464004	R40H521	R40H9237	R40H3502	R40H3503
	Fm	WG	15 " x 3 "	1245A - 235	R700235	R40H521	R40H9201	R40H3524	R40H3524
	Fm	WG	15 " x 3-1/2 "	1280 - 463	R700463	R40H521	R40H9201	R40H3524	R40H3524
S1724, S1754 Conventional FA74	Fa	WG	15 " x 3 "	1245C - 321	R700321	R40H521	R40H9237	R40H3502	R40H3503
	Fm	WG	15 " x 3 "	1245A - 235	R700235	R40H521	R40H9201	R40H3524	R40H3524
S1724, S1754 Conventional FA78, 81	Fa	WG	15 " x 3 "	1245C - 321	R700321	R40H521	R40H9237	R40H3502	R40H3503
S1724, S1754 Conventional FA89, 91, 98	Fa	WG	15 " x 3 "	1245C - 321	R700321	R40H521	R40H9237	R40H3502	R40H3503
	Fm	WG	15 " x 3 "	1245A - 235	R700235	R40H521	R40H9201	R40H3524	R40H3524
S1724, S1754 Conventional RA184	Ra	WG	15 " x 4 "	4645A - 376	Discontinued	R40H597	R40H9200	R40H3540	R40H3541
	Rm	WG	15 " x 4 "	4645A - 376	Discontinued	R40H597	R40H9200	R40H3518	R404148
S1724, S1754 Conventional RA25, 184	Ra	WG	15 " x 5 "	1252 - 346	R700346	R40H597	R40H9200	R40H3540	R40H3541
	Rm	WG	15 " x 5 "	1252 - 346	R700346	R40H597	R40H9200	R40H3518	R404148
S1724, S1754 Conventional RA29, 30, 187	Ra	WG	15 " x 5 "	1252 - 346	R700346	R40H597	R40H9200	R40H3540	R40H3541
	Rm	WG	15 " x 5 "	1252 - 346	R700346	R40H597	R40H9200	R40H3518	R404148
S1724, S1754 Conventional RA30, 187	Ra	WG	16 " x 5 "	1254 - 385	N/A	R40H597	R40H9200	NLA	NLA
	Rm	WG	16 " x 5 "	1254 - 385	N/A	R40H597	R40H9200	R404149	R404150
S1724, S1754 Conventional RA30, 39, 44, 186, 189	Ra	WG	15 " x 6 "	4596 - 381	R700381	R40H597	R40H9200	R40H3540	R40H3541
	Rm	WG	15 " x 6 "	4596 - 381	R700381	R40H597	R40H9200	R40H3518	R404148
S1724, S1754 Conventional RA39, 199	Ra	WG	15 " x 7 "	4597 - 383	R700383	R40H597	R40H9200	R40H3540	R40H3541
	Rm	WG	15 " x 7 "	4597 - 383	R700383	R40H597	R40H9200	R40H3518	R404148
S1724, S1754 Conventional RA44, 186	Ra	WG	15 " x 7 "	4597 - 383	R700383	R40H597	R40H9200	NLA	NLA
	Rm	WG	15 " x 7 "	4597 - 383	R700383	R40H597	R40H9200	R40H3518	R404148
S1724, S1754 Conventional RA47, 57	Ra	WG	16 " x 6 "	1255 - 386	N/A	R40H597	R40H9200	NLA	NLA
	Rm	WG	16 " x 6 "	1255 - 386	N/A	R40H597	R40H9200	R404149	R404150
180, 1800, 1810, 1823, 1824, 1850, 1853, 1854 SERIES CONVENTIONAL TRUCK, SCHOOL BUS, TILT CAB									
1989									
	Fd	BX		7108 - D184	MD184	R40H5010	R40H5519	NR	NR
	Fd	BX		7142 - D225	MD225	R40H5010	R40H5522	NR	NR
	Fd	BX		7108 - D184	MD184	R40H5010	R40H5519	NR	NR
	Fd	BX		7108 - D184	MD184	R40H5010	R40H5519	NR	NR
	Fd	BX		7108 - D184	MD184	R40H5010	R40H5519	NR	NR
	Fd	BX		7142 - D225	MD225	R40H5010	R40H5522	NR	NR
	Fd	BX		7142 - D225	MD225	R40H5010	R40H5522	NR	NR

37 - Also available as a New unit
267 - 10 Stud, U Shaped
271 - 6 Stud, Hat Shape
72 - Phenolic/Steel Face
268 - 5 Stud, Hat Shape
272 - 6 Stud, U Shape
201 - Steel Piston
269 - 5 Stud, U Shape
273 - 5 Stud, U Shape, .780 Dia. Studs

MERITOR DRUM OR ROTOR NO.	CALIPER OR CYLINDER BORE SIZE	MERITOR CALIPER OR WHEEL CYLINDER (LEFT)	MERITOR CALIPER OR WHEEL CYLINDER (RIGHT)	MERITOR CALIPER OR WHEEL CYLINDER REPAIR KIT	MERITOR CALIPER PISTON	MERITOR MASTER CYLINDER	MERITOR MASTER CYLINDER KIT	MERITOR BRAKE HOSE (LEFT)	MERITOR BRAKE HOSE (RIGHT)
									ITE(Cont.)
170, 1700, 1710, 1723, 1724, 1750, 1753, 1754 SERIES CONVENTIONAL CAB, SCHOOL BUS, TILT CAB(Cont.)									
-	1-3/4 "	R4133400	R4133400	R4166917	NR	-	-	-	-
-	1-3/4 "	R4133400	R4133400	R4166917	NR	-	-	-	-
-	1-1/4 "	R4133581	R4133582	R4166923	NR	-	-	-	-
-	1-1/4 "	R4133581	R4133582	R4166923	NR	-	-	-	-
-		-	-	-	-	-	-	-	-
-		-	-	-	-	-	-	-	-
-	1-1/4 "	R4133581	R4133582	R4166923	NR	-	-	-	-
-	1-1/4 "	R4133581	R4133582	R4166923	NR	-	-	-	-
-	1-1/8 "	R4133714	R4133715	R4166926	NR	-	-	-	-
-	1-1/8 "	R4133714	R4133715	R4166926	NR	-	-	-	-
-	1-1/4 "	R4133581	R4133582	R4166923	NR	-	-	-	-
-	1-1/4 "	R4133581	R4133582	R4166923	NR	-	-	-	-
-	1-1/4 "	R4133581	R4133582	R4166923	NR	-	-	-	-
-	1-1/4 "	R4133581	R4133582	R4166923	NR	-	-	-	-
-	1-1/4 "	R4133581	R4133582	R4166923	NR	-	-	-	-
-	1-1/4 "	R4133581	R4133582	R4166923	NR	-	-	-	-
-	1-1/4 "	R4133581	R4133582	R4166923	NR	-	-	-	-
-	1-1/4 "	R4133581	R4133582	R4166923	NR	-	-	-	-
-	1-1/4 "	R4133581	R4133582	R4166923	NR	-	-	-	-
-	1-1/2 "	R4133580	R4133580	Discontinued	NR	-	-	-	-
-	1-1/2 "	R4133580	R4133580	Discontinued	NR	-	-	-	-
-	1-1/2 "	R4133580	R4133580	Discontinued	NR	-	-	-	-
-	1-1/2 "	R4133580	R4133580	Discontinued	NR	-	-	-	-
-	1-1/2 "	R4133580	R4133580	Discontinued	NR	-	-	-	-
-	1-1/2 "	R4133580	R4133580	Discontinued	NR	-	-	-	-
-	1-5/8 "	R4133338	R4133338	R4166689	NR	-	-	-	-
-	1-5/8 "	R4133338	R4133338	R4166689	NR	-	-	-	-
-	1-5/8 "	R4133338	R4133338	R4166689	NR	-	-	-	-
-	1-5/8 "	R4133338	R4133338	R4166689	NR	-	-	-	-
-	1-5/8 "	R4133338	R4133338	R4166689	NR	-	-	-	-
-	1-5/8 "	R4133338	R4133338	R4166689	NR	-	-	-	-
-	1-5/8 "	R4133338	R4133338	R4166689	NR	-	-	-	-
-	1-5/8 "	R4133338	R4133338	R4166689	NR	-	-	-	-
-	1-3/4 "	R4133400	R4133400	R4166917	NR	-	-	-	-
-	1-3/4 "	R4133400	R4133400	R4166917	NR	-	-	-	-
180, 1800, 1810, 1823, 1824, 1850, 1853, 1854 SERIES CONVENTIONAL TRUCK, SCHOOL BUS, TILT CAB									
23-122920-002[273]	3-3/8 "	R42R55099	R42R55098[37]	R4066780	R4090021[201]	-	-	R458636	R458636
R44141628[269]	2-7/8 "	R42R55250	R42R55250[37]	R4066365	R4090096[72]	-	-	-	-
23-123572-004[271]	3-3/8 "	R42R55099	R42R55098[37]	R4066780	R4090021[201]	-	-	N/A	N/A
R44141476[268]	3-3/8 "	R42R55099	R42R55098[37]	R4066780	R4090021[201]	-	-	N/A	N/A
23-122527-002[272]	3-3/8 "	R42R55099	R42R55098[37]	R4066780	R4090021[201]	-	-	-	-
R44141608[267]	2-7/8 "	R42R55250	R42R55250[37]	R4066365	R4090096[72]	-	-	-	-
23-123572-004[271]	2-7/8 "	R42R55250	R42R55250[37]	R4066365	R4090096[72]	-	-	-	-

MAKE MODEL YEAR AXLE CODE AXLE WEIGHT	AXLE & BRK. TYPE	BRK. MFG.	BRAKE SIZE	FMSI	MERITOR DISC PAD OR BRAKE SHOE	MERITOR GUIDE PIN OR RETURN SPRING KIT	MERITOR CALIPER HWD. KIT OR RETURN SPRING KIT	MERITOR ADJUSTER KIT (LEFT WHEEL)	MERITOR ADJUSTER KIT (RIGHT WHEEL)
ITE(Cont.)									
180, 1800, 1810, 1823, 1824, 1850, 1853, 1854 SERIES CONVENTIONAL TRUCK, SCHOOL BUS, TILT CAB(Cont.)									
1989									
	Fd	BX		7142 - D225	MD225	R40H5010	R40H5522	NR	NR
	Fd	BX		7108 - D184	MD184	R40H5010	R40H5519	NR	NR
	Fd	BX		7142 - D225	MD225	R40H5010	R40H5522	NR	NR
	Fd	BX		7108 - D184	MD184	R40H5010	R40H5519	NR	NR
	Fd	BX		7108 - D184	MD184	R40H5010	R40H5519	NR	NR
	Fd	BX		7108 - D184	MD184	R40H5010	R40H5519	NR	NR
	Fd	BX		7142 - D225	MD225	R40H5010	R40H5522	NR	NR
	Fd	BX		7108 - D184	MD184	R40H5010	R40H5519	NR	NR
	Fd	BX		7108 - D184	MD184	R40H5010	R40H5519	NR	NR
	Fd	BX		7108 - D184	MD184	R40H5010	R40H5519	NR	NR
	Fd	BX		7142 - D225	MD225	R40H5010	R40H5522	NR	NR
	Fd	BX		7108 - D184	MD184	R40H5010	R40H5519	NR	NR
	Fd	BX		7108 - D184	MD184	R40H5010	R40H5519	NR	NR
	Fd	BX		7108 - D184	MD184	R40H5010	R40H5519	NR	NR
	Fd	BX		7108 - D184	MD184	R40H5010	R40H5519	NR	NR
	Fd	BX		7108 - D184	MD184	R40H5010	R40H5519	NR	NR
	Fd	BX		7142 - D225	MD225	R40H5010	R40H5522	NR	NR
	Fd	BX		7108 - D184	MD184	R40H5010	R40H5519	NR	NR
	Fd	BX		7108 - D184	MD184	R40H5010	R40H5519	NR	NR
	Fd	BX		7108 - D184	MD184	R40H5010	R40H5519	NR	NR
	Fd	BX		7108 - D184	MD184	R40H5010	R40H5519	NR	NR
	Fd	BX		7108 - D184	MD184	R40H5010	R40H5519	NR	NR
	Fd	BX		7108 - D184	MD184	R40H5010	R40H5519	NR	NR
	Fd	BX		7108 - D184	MD184	R40H5010	R40H5519	NR	NR
	Fd	BX		7142 - D225	MD225	R40H5010	R40H5522	NR	NR
	Fd	BX		7108 - D184	MD184	R40H5010	R40H5519	NR	NR
	Fd	BX		7108 - D184	MD184	R40H5010	R40H5519	NR	NR
	Fd	BX		7142 - D225	MD225	R40H5010	R40H5522	NR	NR
	Fd	BX		7108 - D184	MD184	R40H5010	R40H5519	NR	NR
	Fd	BX		7108 - D184	MD184	R40H5010	R40H5519	NR	NR
	Fd	BX		7142 - D225	MD225	R40H5010	R40H5522	NR	NR
	Fd	BX		7108 - D184	MD184	R40H5010	R40H5519	NR	NR
	Fd	BX		7142 - D225	MD225	R40H5010	R40H5522	NR	NR
	Fd	BX		7142 - D225	MD225	R40H5010	R40H5522	NR	NR
	Fd	BX		7108 - D184	MD184	R40H5010	R40H5519	NR	NR
	Fd	BX		7108 - D184	MD184	R40H5010	R40H5519	NR	NR
	Fd	BX		7142 - D225	MD225	R40H5010	R40H5522	NR	NR
	Fd	BX		7142 - D225	MD225	R40H5010	R40H5522	NR	NR
	Fd	BX		7108 - D184	MD184	R40H5010	R40H5519	NR	NR
	Fd	BX		7142 - D225	MD225	R40H5010	R40H5522	NR	NR
	Fd	BX		7142 - D225	MD225	R40H5010	R40H5522	NR	NR
	Fd	BX		7142 - D225	MD225	R40H5010	R40H5522	NR	NR
	Fd	BX		7108 - D184	MD184	R40H5010	R40H5519	NR	NR
	Fd	BX		7108 - D184	MD184	R40H5010	R40H5519	NR	NR
	Fd	BX		7108 - D184	MD184	R40H5010	R40H5519	NR	NR
	Fd	BX		7108 - D184	MD184	R40H5010	R40H5519	NR	NR
	Fd	BX		7142 - D225	MD225	R40H5010	R40H5522	NR	NR
	Fd	BX		7108 - D184	MD184	R40H5010	R40H5519	NR	NR
	Fd	BX		7108 - D184	MD184	R40H5010	R40H5519	NR	NR
	Fd	BX		7142 - D225	MD225	R40H5010	R40H5522	NR	NR
	Fd	BX		7142 - D225	MD225	R40H5010	R40H5522	NR	NR
	Fd	BX		7108 - D184	MD184	R40H5010	R40H5519	NR	NR
	Fd	BX		7108 - D184	MD184	R40H5010	R40H5519	NR	NR
	Fd	BX		7142 - D225	MD225	R40H5010	R40H5522	NR	NR
	Fd	BX		7108 - D184	MD184	R40H5010	R40H5519	NR	NR
	Fd	BX		7142 - D225	MD225	R40H5010	R40H5522	NR	NR
	Fd	BX		7142 - D225	MD225	R40H5010	R40H5522	NR	NR
	Fd	BX		7108 - D184	MD184	R40H5010	R40H5519	NR	NR
	Fd	BX		7142 - D225	MD225	R40H5010	R40H5522	NR	NR
	Fd	BX		7108 - D184	MD184	R40H5010	R40H5519	NR	NR
	Fd	BX		7142 - D225	MD225	R40H5010	R40H5522	NR	NR
	Fd	BX		7108 - D184	MD184	R40H5010	R40H5519	NR	NR

37 - Also available as a New unit

38 - First design, may have external joining tube and uses steel pistons

39 - First design, uses steel pistons.

40 - For chrome plated steel version, use R4090070P

72 - Phenolic/Steel Face

201 - Steel Piston

266 - 10 Stud, Hat Shaped

267 - 10 Stud, U Shaped

268 - 5 Stud, Hat Shape

MERITOR DRUM OR ROTOR NO.	CALIPER OR CYLINDER BORE SIZE	MERITOR CALIPER OR WHEEL CYLINDER (LEFT)	MERITOR CALIPER OR WHEEL CYLINDER (RIGHT)	MERITOR CALIPER OR WHEEL CYLINDER REPAIR KIT	MERITOR CALIPER PISTON	MERITOR MASTER CYLINDER	MERITOR MASTER CYLINDER KIT	MERITOR BRAKE HOSE (LEFT)	MERITOR BRAKE HOSE (RIGHT)
									ITE(Cont.)
180, 1800, 1810, 1823, 1824, 1850, 1853, 1854 SERIES CONVENTIONAL TRUCK, SCHOOL BUS, TILT CAB(Cont.)									
23-122920-002[273]	2-7/8 "	R42R55250	R42R55250[37]	R4066365	R4090096[72]	-	-	-	-
23-123552-004[266]	3-3/8 "	R42R55099	R42R55098[37]	R4066780	R4090021[201]	-	-	N/A	N/A
R44141627[270]	2-7/8 "	R42R55250	R42R55250[37]	R4066365	R4090096[72]	-	-	-	-
R44141858[275]	3-3/8 "	R42R55099	R42R55098[37]	R4066780	R4090021[201]	-	-	R458636	R458636
23-122920-002[273]	3-3/8 "	R42R55099	R42R55098[37]	R4066780	R4090021[201]	-	-	N/A	N/A
23-122527-002[272]	2-19/32 "	R42R55245	R42R55245[38]	R402235118	R402238231[201]	-	-	-	-
R44141628[269]	2-7/8 "	R42R55250	R42R55250[37]	R4066365	R4090096[72]	-	-	-	-
23-123552-004[266]	3-3/8 "	R42R55099	R42R55098[37]	R4066780	R4090021[201]	-	-	N/A	N/A
R44141858[275]	3-3/8 "	R42R55099	R42R55098[37]	R4066780	R4090021[201]	-	-	R458636	R458636
23-122920-002[273]	3-3/8 "	R42R55099	R42R55098[37]	R4066780	R4090021[201]	-	-	R458636	R458636
R44141476[268]	2-7/8 "	R429218X	R429218X[39]	R406532	R4090070[40]	-	-	-	-
23-123572-004[271]	2-19/32 "	R42R55245	R42R55245[38]	R402235118	R402238231[201]	-	-	-	-
R44141476[268]	2-19/32 "	R42R55245	R42R55245[38]	R402235118	R402238231[201]	-	-	-	-
R44141476[268]	3-3/8 "	R42R55099	R42R55098[37]	R4066780	R4090021[201]	-	-	R458635	R458635
R44141858[275]	3-3/8 "	R42R55099	R42R55098[37]	R4066780	R4090021[201]	-	-	R458636	R458636
R44141476[268]	3-3/8 "	R42R55099	R42R55098[37]	R4066780	R4090021[201]	-	-	N/A	N/A
23-123572-004[271]	2-7/8 "	R42R55250	R42R55250[37]	R4066365	R4090096[72]	-	-	-	-
23-122527-002[272]	3-3/8 "	R42R55099	R42R55098[37]	R4066780	R4090021[201]	-	-	R458636	R458636
R44141858[275]	3-3/8 "	R42R55099	R42R55098[37]	R4066780	R4090021[201]	-	-	N/A	N/A
R44141476[268]	3-3/8 "	R42R55099	R42R55098[37]	R4066780	R4090021[201]	-	-	R458636	R458636
23-123572-004[271]	3-3/8 "	R42R55099	R42R55098[37]	R4066780	R4090021[201]	-	-	R458636	R458636
R44141476[268]	3-3/8 "	R42R55099	R42R55098[37]	R4066780	R4090021[201]	-	-	N/A	N/A
23-123572-004[271]	3-3/8 "	R42R55099	R42R55098[37]	R4066780	R4090021[201]	-	-	R458636	R458636
23-123572-004[271]	3-3/8 "	R42R55099	R42R55098[37]	R4066780	R4090021[201]	-	-	N/A	N/A
23-122920-002[273]	3-3/8 "	R42R55099	R42R55098[37]	R4066780	R4090021[201]	-	-	R458636	R458636
R44141628[269]	2-7/8 "	R42R55250	R42R55250[37]	R4066365	R4090096[72]	-	-	-	-
23-123552-004[266]	3-3/8 "	R42R55099	R42R55098[37]	R4066780	R4090021[201]	-	-	-	-
23-123552-004[266]	3-3/8 "	R42R55099	R42R55098[37]	R4066780	R4090021[201]	-	-	R458636	R458636
23-123552-004[266]	2-7/8 "	R42R55250	R42R55250[37]	R4066365	R4090096[72]	-	-	-	-
R44141858[275]	3-3/8 "	R42R55099	R42R55098[37]	R4066780	R4090021[201]	-	-	-	-
23-123552-004[266]	3-3/8 "	R42R55099	R42R55098[37]	R4066780	R4090021[201]	-	-	R458635	R458635
23-123572-004[271]	2-7/8 "	R429218X	R429218X[39]	R406532	R4090070[40]	-	-	-	-
R44141858[275]	3-3/8 "	R42R55099	R42R55098[37]	R4066780	R4090021[201]	-	-	R458635	R458635
R44141608[267]	2-7/8 "	R42R55250	R42R55250[37]	R4066365	R4090096[72]	-	-	-	-
23-123552-004[266]	2-7/8 "	R42R55250	R42R55250[37]	R4066365	R4090096[72]	-	-	-	-
23-123552-004[266]	3-3/8 "	R42R55099	R42R55098[37]	R4066780	R4090021[201]	-	-	R458636	R458636
R44141476[268]	2-19/32 "	R42R55314	R42R55314[37]	R40107771	R4090100P[72]	-	-	-	-
R44141629[269]	2-7/8 "	R42R55250	R42R55250[37]	R4066365	R4090096[72]	-	-	-	-
23-122920-002[273]	2-7/8 "	R42R55250	R42R55250[37]	R4066365	R4090096[72]	-	-	-	-
23-123572-004[271]	3-3/8 "	R42R55099	R42R55098[37]	R4066780	R4090021[201]	-	-	R458635	R458635
R44141858[275]	2-7/8 "	R42R55250	R42R55250[37]	R4066365	R4090096[72]	-	-	-	-
R44141627[270]	2-7/8 "	R42R55250	R42R55250[37]	R4066365	R4090096[72]	-	-	-	-
R44141629[269]	2-7/8 "	R42R55250	R42R55250[37]	R4066365	R4090096[72]	-	-	-	-
23-122920-002[273]	3-3/8 "	R42R55099	R42R55098[37]	R4066780	R4090021[201]	-	-	-	-
23-122920-002[273]	3-3/8 "	R42R55099	R42R55098[37]	R4066780	R4090021[201]	-	-	R458635	R458635
23-122527-002[272]	3-3/8 "	R42R55099	R42R55098[37]	R4066780	R4090021[201]	-	-	N/A	N/A
23-123552-004[266]	3-3/8 "	R42R55099	R42R55098[37]	R4066780	R4090021[201]	-	-	R458635	R458635
23-123552-004[266]	2-7/8 "	R42R55250	R42R55250[37]	R4066365	R4090096[72]	-	-	-	-
R44141858[275]	3-3/8 "	R42R55099	R42R55098[37]	R4066780	R4090021[201]	-	-	R458635	R458635
23-122527-002[272]	3-3/8 "	R42R55099	R42R55098[37]	R4066780	R4090021[201]	-	-	R458635	R458635
23-123572-004[271]	2-7/8 "	R42R55250	R42R55250[37]	R4066365	R4090096[72]	-	-	-	-
23-122527-002[272]	2-7/8 "	R42R55250	R42R55250[37]	R4066365	R4090096[72]	-	-	-	-
23-122920-002[273]	3-3/8 "	R42R55099	R42R55098[37]	R4066780	R4090021[201]	-	-	R458635	R458635
23-122920-002[273]	3-3/8 "	R42R55099	R42R55098[37]	R4066780	R4090021[201]	-	-	N/A	N/A
R44141476[268]	2-7/8 "	R42R55250	R42R55250[37]	R4066365	R4090096[72]	-	-	-	-
23-123552-004[266]	3-3/8 "	R42R55099	R42R55098[37]	R4066780	R4090021[201]	-	-	R458635	R458635
23-123552-004[266]	2-7/8 "	R42R55250	R42R55250[37]	R4066365	R4090096[72]	-	-	-	-
R44141476[268]	2-7/8 "	R42R55250	R42R55250[37]	R4066365	R4090096[72]	-	-	-	-
23-123572-004[271]	3-3/8 "	R42R55099	R42R55098[37]	R4066780	R4090021[201]	-	-	N/A	N/A
23-123552-004[266]	2-7/8 "	R429218X	R429218X[39]	R406532	R4090070[40]	-	-	-	-
23-123572-004[271]	3-3/8 "	R42R55099	R42R55098[37]	R4066780	R4090021[201]	-	-	R458635	R458635
R44141476[268]	2-7/8 "	R42R55250	R42R55250[37]	R4066365	R4090096[72]	-	-	-	-
R44141476[268]	3-3/8 "	R42R55099	R42R55098[37]	R4066780	R4090021[201]	-	-	R458636	R458636

269 - 5 Stud, U Shape

270 - 5 Stud, U Shape, .766 Dia. Studs

271 - 6 Stud, Hat Shape

272 - 6 Stud, U Shape

273 - 5 Stud, U Shape, .780 Dia. Studs

275 - 5 Stud, U Shape, .656 Dia. Studs

MAKE MODEL YEAR AXLE CODE AXLE WEIGHT	AXLE & BRK. TYPE	BRK. MFG.	BRAKE SIZE	FMSI	MERITOR DISC PAD OR BRAKE SHOE	MERITOR GUIDE PIN OR RETURN SPRING KIT	MERITOR CALIPER HWD. KIT OR RETURN SPRING KIT	MERITOR ADJUSTER KIT (LEFT WHEEL)	MERITOR ADJUSTER KIT (RIGHT WHEEL)
ITE(Cont.)									
180, 1800, 1810, 1823, 1824, 1850, 1853, 1854 SERIES CONVENTIONAL TRUCK, SCHOOL BUS, TILT CAB(Cont.)									
1989									
	Fd	BX		7108 - D184	MD184	R40H5010	R40H5519	NR	NR
	Fd	BX		7142 - D225	MD225	R40H5010	R40H5522	NR	NR
	Fd	BX		7108 - D184	MD184	R40H5010	R40H5519	NR	NR
	Fd	BX		7142 - D225	MD225	R40H5010	R40H5522	NR	NR
	Fd	BX		7142 - D225	MD225	R40H5010	R40H5522	NR	NR
	Fd	BX		7108 - D184	MD184	R40H5010	R40H5519	NR	NR
	Fd	BX		7108 - D184	MD184	R40H5010	R40H5519	NR	NR
	Fd	BX		7108 - D184	MD184	R40H5010	R40H5519	NR	NR
	Fd	BX		7142 - D225	MD225	R40H5010	R40H5522	NR	NR
	Fd	BX		7108 - D184	MD184	R40H5010	R40H5519	NR	NR
	Fd	BX		7108 - D184	MD184	R40H5010	R40H5519	NR	NR
	Fd	BX		7142 - D225	MD225	R40H5010	R40H5522	NR	NR
	Fd	BX		7108 - D184	MD184	R40H5010	R40H5519	NR	NR
	Fd	BX		7108 - D184	MD184	R40H5010	R40H5519	NR	NR
	Fd	BX		7142 - D225	MD225	R40H5010	R40H5522	NR	NR
	Fd	BX		7142 - D225	MD225	R40H5010	R40H5522	NR	NR
	Fd	BX		7108 - D184	MD184	R40H5010	R40H5519	NR	NR
	Fd	BX		7108 - D184	MD184	R40H5010	R40H5519	NR	NR
	Fd	BX		7108 - D184	MD184	R40H5010	R40H5519	NR	NR
	Fd	BX		7108 - D184	MD184	R40H5010	R40H5519	NR	NR
	Fd	BX		7108 - D184	MD184	R40H5010	R40H5519	NR	NR
	Fd	BX		7142 - D225	MD225	R40H5010	R40H5522	NR	NR
	Fd	BX		7108 - D184	MD184	R40H5010	R40H5519	NR	NR
	Fd	BX		7142 - D225	MD225	R40H5010	R40H5522	NR	NR
	Fd	BX		7142 - D225	MD225	R40H5010	R40H5522	NR	NR
	Fd	BX		7108 - D184	MD184	R40H5010	R40H5519	NR	NR
	Fd	BX		7142 - D225	MD225	R40H5010	R40H5522	NR	NR
	Fd	BX		7108 - D184	MD184	R40H5010	R40H5519	NR	NR
	Fd	BX		7142 - D225	MD225	R40H5010	R40H5522	NR	NR
	Fd	BX		7108 - D184	MD184	R40H5010	R40H5519	NR	NR
	Fd	BX		7108 - D184	MD184	R40H5010	R40H5519	NR	NR
	Fd	BX		7108 - D184	MD184	R40H5010	R40H5519	NR	NR
	Fd	BX		7142 - D225	MD225	R40H5010	R40H5522	NR	NR
	Fd	BX		7108 - D184	MD184	R40H5010	R40H5519	NR	NR
	Fd	BX		7142 - D225	MD225	R40H5010	R40H5522	NR	NR
	Fd	BX		7108 - D184	MD184	R40H5010	R40H5519	NR	NR
	Fd	BX		7142 - D225	MD225	R40H5010	R40H5522	NR	NR
	Rd	BX		7108 - D184	MD184	R40H5010	R40H5519	NR	NR
	Rd	BX		7108 - D184	MD184	R40H5010	R40H5519	NR	NR
	Rd	BX		7108 - D184	MD184	R40H5010	R40H5519	NR	NR
	Rd	BX		7108 - D184	MD184	R40H5010	R40H5519	NR	NR
	Rd	BX		7108 - D184	MD184	R40H5010	R40H5519	NR	NR
	Rd	BX		7108 - D184	MD184	R40H5010	R40H5519	NR	NR
	Rd	BX		7108 - D184	MD184	R40H5010	R40H5519	NR	NR
	Rd	BX		7108 - D184	MD184	R40H5010	R40H5519	NR	NR
	Rd	BX		7108 - D184	MD184	R40H5010	R40H5519	NR	NR
	Rd	BX		7108 - D184	MD184	R40H5010	R40H5519	NR	NR
	Rd	BX		7108 - D184	MD184	R40H5010	R40H5519	NR	NR
	Rd	BX		7108 - D184	MD184	R40H5010	R40H5519	NR	NR
	Rd	BX		7108 - D184	MD184	R40H5010	R40H5519	NR	NR
	Rd	BX		7108 - D184	MD184	R40H5010	R40H5519	NR	NR
	Rd	BX		7108 - D184	MD184	R40H5010	R40H5519	NR	NR
	Rd	BX		7108 - D184	MD184	R40H5010	R40H5519	NR	NR
	Rd	BX		7108 - D184	MD184	R40H5010	R40H5519	NR	NR
	Rd	BX		7108 - D184	MD184	R40H5010	R40H5519	NR	NR
	Rd	BX		7108 - D184	MD184	R40H5010	R40H5519	NR	NR
	Rd	BX		7108 - D184	MD184	R40H5010	R40H5519	NR	NR
	Rd	BX		7108 - D184	MD184	R40H5010	R40H5519	NR	NR
	Rd	BX		7108 - D184	MD184	R40H5010	R40H5519	NR	NR
	Rd	BX		7108 - D184	MD184	R40H5010	R40H5519	NR	NR
	Rd	BX		7108 - D184	MD184	R40H5010	R40H5519	NR	NR
	Rd	BX		7108 - D184	MD184	R40H5010	R40H5519	NR	NR
	Rd	BX		7108 - D184	MD184	R40H5010	R40H5519	NR	NR

37 - Also available as a New unit

38 - First design, may have external joining tube and uses steel pistons

39 - First design, uses steel pistons.

40 - For chrome plated steel version, use R4090070P

52 - 18" Length

72 - Phenolic/Steel Face

201 - Steel Piston

266 - 10 Stud, Hat Shaped

267 - 10 Stud, U Shaped

MERITOR DRUM OR ROTOR NO.	CALIPER OR CYLINDER BORE SIZE	MERITOR CALIPER OR WHEEL CYLINDER (LEFT)	MERITOR CALIPER OR WHEEL CYLINDER (RIGHT)	MERITOR CALIPER OR WHEEL CYLINDER REPAIR KIT	MERITOR CALIPER PISTON	MERITOR MASTER CYLINDER	MERITOR MASTER CYLINDER KIT	MERITOR BRAKE HOSE (LEFT)	MERITOR BRAKE HOSE (RIGHT)
									ITE(Cont.)
180, 1800, 1810, 1823, 1824, 1850, 1853, 1854 SERIES CONVENTIONAL TRUCK, SCHOOL BUS, TILT CAB(Cont.)									
23-123552-004[266]	2-19/32 "	R42R55245	R42R55245[38]	R402235118	R402238231[201]	-	-	-	-
23-122527-002[272]	2-7/8 "	R42R55250	R42R55250[37]	R4066365	R4090096[72]	-	-	-	-
23-123552-004[266]	3-3/8 "	R42R55099	R42R55098[37]	R4066780	R4090021[201]	-	-	R458636	R458636
R44141858[275]	2-7/8 "	R42R55250	R42R55250[37]	R4066365	R4090096[72]	-	-	-	-
23-123552-004[266]	2-7/8 "	R42R55250	R42R55250[37]	R4066365	R4090096[72]	-	-	-	-
23-122920-002[273]	2-19/32 "	R42R55314	R42R55314[37]	R40107771	R4090100P[72]	-	-	-	-
23-123572-004[271]	3-3/8 "	R42R55099	R42R55098[37]	R4066780	R4090021[201]	-	-	R458635	R458635
R44141476[268]	3-3/8 "	R42R55099	R42R55098[37]	R4066780	R4090021[201]	-	-	R458635	R458635
R44141608[267]	2-7/8 "	R42R55250	R42R55250[37]	R4066365	R4090096[72]	-	-	-	-
R44141858[275]	3-3/8 "	R42R55099	R42R55098[37]	R4066780	R4090021[201]	-	-	R458635	R458635
R44141476[268]	3-3/8 "	R42R55099	R42R55098[37]	R4066780	R4090021[201]	-	-	-	-
23-123572-004[271]	2-7/8 "	R42R55250	R42R55250[37]	R4066365	R4090096[72]	-	-	-	-
R44141476[268]	3-3/8 "	R42R55099	R42R55098[37]	R4066780	R4090021[201]	-	-	R458635	R458635
23-123572-004[271]	2-19/32 "	R42R55314	R42R55314[37]	R40107771	R4090100P[72]	-	-	-	-
23-123572-004[271]	2-7/8 "	R42R55250	R42R55250[37]	R4066365	R4090096[72]	-	-	-	-
23-122920-002[273]	2-7/8 "	R42R55250	R42R55250[37]	R4066365	R4090096[72]	-	-	-	-
R44141858[275]	3-3/8 "	R42R55099	R42R55098[37]	R4066780	R4090021[201]	-	-	N/A	N/A
R44141858[275]	3-3/8 "	R42R55099	R42R55098[37]	R4066780	R4090021[201]	-	-	N/A	N/A
23-123552-004[266]	3-3/8 "	R42R55099	R42R55098[37]	R4066780	R4090021[201]	-	-	N/A	N/A
R44141476[268]	3-3/8 "	R42R55099	R42R55098[37]	R4066780	R4090021[201]	-	-	R458636	R458636
23-122527-002[272]	3-3/8 "	R42R55099	R42R55098[37]	R4066780	R4090021[201]	-	-	-	-
R44141858[275]	2-7/8 "	R429218X	R429218X[39]	R406532	R4090070[40]	-	-	-	-
R44141858[275]	2-19/32 "	R42R55245	R42R55245[38]	R402235118	R402238231[201]	-	-	-	-
23-122527-002[272]	2-7/8 "	R42R55250	R42R55250[37]	R4066365	R4090096[72]	-	-	-	-
23-123552-004[266]	2-7/8 "	R42R55250	R42R55250[37]	R4066365	R4090096[72]	-	-	-	-
23-123552-004[266]	2-19/32 "	R42R55314	R42R55314[37]	R40107771	R4090100P[72]	-	-	-	-
R44141858[275]	2-7/8 "	R42R55250	R42R55250[37]	R4066365	R4090096[72]	-	-	-	-
23-122920-002[273]	2-19/32 "	R42R55245	R42R55245[38]	R402235118	R402238231[201]	-	-	-	-
23-122920-002[273]	2-7/8 "	R429218X	R429218X[39]	R406532	R4090070[40]	-	-	-	-
23-123572-004[271]	3-3/8 "	R42R55099	R42R55098[37]	R4066780	R4090021[201]	-	-	R458636	R458636
R44141858[275]	2-19/32 "	R42R55314	R42R55314[37]	R40107771	R4090100P[72]	-	-	-	-
23-122527-002[272]	2-19/32 "	R42R55314	R42R55314[37]	R40107771	R4090100P[72]	-	-	-	-
23-123572-004[271]	2-7/8 "	R42R55250	R42R55250[37]	R4066365	R4090096[72]	-	-	-	-
23-122920-002[273]	3-3/8 "	R42R55099	R42R55098[37]	R4066780	R4090021[201]	-	-	N/A	N/A
R44141627[270]	2-7/8 "	R42R55250	R42R55250[37]	R4066365	R4090096[72]	-	-	-	-
23-122920-002[273]	3-3/8 "	R42R55099	R42R55098[37]	R4066780	R4090021[201]	-	-	R458635	R458635
23-122527-002[272]	2-7/8 "	R429218X	R429218X[39]	R406532	R4090070[40]	-	-	-	-
R44141628[269]	2-19/32 "	R42R55245	R42R55245[38]	R402235118	R402238231[201]	-	-	R458634[52]	R458634
23-122527-002[272]	2-19/32 "	R42R55245	R42R55245[38]	R40107771	R4090100P[201]	-	-	R4577512	R4577512
R44141608[267]	2-19/32 "	R42R55245	R42R55245[38]	R402235118	R402238231[201]	-	-	R4577512	R4577512
23-122527-002[272]	2-19/32 "	R42R55245	R42R55245[38]	R40107771	R4090100P[201]	-	-	R458634[52]	R458634
23-122527-002[272]	2-19/32 "	R42R55245	R42R55245[38]	R402235118	R402238231[201]	-	-	R4577512	R4577512
R44141627[270]	2-19/32 "	R42R55245	R42R55245[38]	R402235118	R402238231[201]	-	-	R458634[52]	R458634
23-122527-002[272]	2-19/32 "	R42R55314	R42R55314[37]	R40107771	R4090100P[72]	-	-	R4577512	R4577512
23-122527-002[272]	2-19/32 "	R42R55245	R42R55245[38]	R40107771	R4090100P[201]	-	-	R458634[52]	R458634
R44141627[270]	2-19/32 "	R42R55245	R42R55245[38]	R402235118	R402238231[201]	-	-	R4577512	R4577512
23-122527-002[272]	2-19/32 "	R42R55245	R42R55245[38]	R402235118	R402238231[201]	-	-	R458634[52]	R458634
R44141608[267]	2-19/32 "	R42R55245	R42R55245[38]	R402235118	R402238231[201]	-	-	R458634[52]	R458634
23-122527-002[272]	2-19/32 "	R42R55245	R42R55245[38]	R40107771	R4090100P[201]	-	-	R458634[52]	R458634
23-122527-002[272]	2-19/32 "	R42R55245	R42R55245[38]	R40107771	R4090100P[201]	-	-	R4577512	R4577512
23-122527-002[272]	2-19/32 "	R42R55245	R42R55245[38]	R40107771	R4090100P[201]	-	-	R458634[52]	R458634
R44141629[269]	2-19/32 "	R42R55245	R42R55245[38]	R402235118	R402238231[201]	-	-	R458634[52]	R458634
23-122527-002[272]	2-19/32 "	R42R55245	R42R55245[38]	R40107771	R4090100P[201]	-	-	R458634[52]	R458634
23-123572-004[271]	2-19/32 "	R42R55245	R42R55245[38]	R402235118	R402238231[201]	-	-	R4577512	R4577512
23-122527-002[272]	2-19/32 "	R42R55245	R42R55245[38]	R40107771	R4090100P[201]	-	-	R4577512	R4577512
23-122527-002[272]	2-19/32 "	R42R55245	R42R55245[38]	R40107771	R4090100P[201]	-	-	R458634[52]	R458634
23-123552-004[266]	2-19/32 "	R42R55245	R42R55245[38]	R402235118	R402238231[201]	-	-	R458634[52]	R458634
23-122527-002[272]	2-19/32 "	R42R55245	R42R55245[38]	R40107771	R4090100P[201]	-	-	R4577512	R4577512
23-122527-002[272]	2-19/32 "	R42R55245	R42R55245[38]	R40107771	R4090100P[201]	-	-	R4577512	R4577512
23-123552-004[266]	2-19/32 "	R42R55245	R42R55245[38]	R402235118	R402238231[201]	-	-	R4577512	R4577512
23-122527-002[272]	2-19/32 "	R42R55245	R42R55245[38]	R40107771	R4090100P[201]	-	-	R4577512	R4577512
R44141628[269]	2-19/32 "	R42R55245	R42R55245[38]	R402235118	R402238231[201]	-	-	R4577512	R4577512
R44141629[269]	2-19/32 "	R42R55245	R42R55245[38]	R402235118	R402238231[201]	-	-	R4577512	R4577512

268 - 5 Stud, Hat Shape
269 - 5 Stud, U Shape
270 - 5 Stud, U Shape, .766 Dia. Studs
271 - 6 Stud, Hat Shape
272 - 6 Stud, U Shape
273 - 5 Stud, U Shape, .780 Dia. Studs
275 - 5 Stud, U Shape, .656 Dia. Studs

MAKE MODEL YEAR AXLE CODE AXLE WEIGHT	AXLE & BRK. TYPE	BRK. MFG.	BRAKE SIZE	FMSI	MERITOR DISC PAD OR BRAKE SHOE	MERITOR GUIDE PIN OR RETURN SPRING KIT	MERITOR CALIPER HWD. KIT OR RETURN SPRING KIT	MERITOR ADJUSTER KIT (LEFT WHEEL)	MERITOR ADJUSTER KIT (RIGHT WHEEL)
ITE(Cont.)									
180, 1800, 1810, 1823, 1824, 1850, 1853, 1854 SERIES CONVENTIONAL TRUCK, SCHOOL BUS, TILT CAB(Cont.)									
1989									
	Rd	BX		7108 - D184	MD184	R40H5010	R40H5519	NR	NR
	Rd	BX		7108 - D184	MD184	R40H5010	R40H5519	NR	NR
1988									
	Fd	BX		7142 - D225	MD225	R40H5010	R40H5522	NR	NR
	Fd	BX		7108 - D184	MD184	R40H5010	R40H5519	NR	NR
	Fd	BX		7142 - D225	MD225	R40H5010	R40H5522	NR	NR
	Fd	BX		7108 - D184	MD184	R40H5010	R40H5519	NR	NR
	Fd	BX		7142 - D225	MD225	R40H5010	R40H5522	NR	NR
	Fd	BX		7142 - D225	MD225	R40H5010	R40H5522	NR	NR
	Fd	BX		7108 - D184	MD184	R40H5010	R40H5519	NR	NR
	Fd	BX		7142 - D225	MD225	R40H5010	R40H5522	NR	NR
	Fd	BX		7108 - D184	MD184	R40H5010	R40H5519	NR	NR
	Fd	BX		7142 - D225	MD225	R40H5010	R40H5522	NR	NR
	Fd	BX		7108 - D184	MD184	R40H5010	R40H5519	NR	NR
	Fd	BX		7142 - D225	MD225	R40H5010	R40H5522	NR	NR
	Fd	BX		7108 - D184	MD184	R40H5010	R40H5519	NR	NR
	Fd	BX		7142 - D225	MD225	R40H5010	R40H5522	NR	NR
	Fd	BX		7108 - D184	MD184	R40H5010	R40H5519	NR	NR
	Fd	BX		7108 - D184	MD184	R40H5010	R40H5519	NR	NR
	Fd	BX		7142 - D225	MD225	R40H5010	R40H5522	NR	NR
	Fd	BX		7142 - D225	MD225	R40H5010	R40H5522	NR	NR
	Fd	BX		7142 - D225	MD225	R40H5010	R40H5522	NR	NR
	Fd	BX		7142 - D225	MD225	R40H5010	R40H5522	NR	NR
	Fd	BX		7142 - D225	MD225	R40H5010	R40H5522	NR	NR
	Fd	BX		7108 - D184	MD184	R40H5010	R40H5519	NR	NR
	Fd	BX		7142 - D225	MD225	R40H5010	R40H5522	NR	NR
	Fd	BX		7142 - D225	MD225	R40H5010	R40H5522	NR	NR
	Fd	BX		7142 - D225	MD225	R40H5010	R40H5522	NR	NR
	Fd	BX		7108 - D184	MD184	R40H5010	R40H5519	NR	NR
	Fd	BX		7142 - D225	MD225	R40H5010	R40H5522	NR	NR
	Fd	BX		7142 - D225	MD225	R40H5010	R40H5522	NR	NR
	Fd	BX		7142 - D225	MD225	R40H5010	R40H5522	NR	NR
	Fd	BX		7108 - D184	MD184	R40H5010	R40H5519	NR	NR
	Fd	BX		7108 - D184	MD184	R40H5010	R40H5519	NR	NR
	Fd	BX		7142 - D225	MD225	R40H5010	R40H5522	NR	NR
	Fd	BX		7142 - D225	MD225	R40H5010	R40H5522	NR	NR
	Fd	BX		7142 - D225	MD225	R40H5010	R40H5522	NR	NR
	Fd	BX		7108 - D184	MD184	R40H5010	R40H5519	NR	NR
	Fd	BX		7142 - D225	MD225	R40H5010	R40H5522	NR	NR
	Fd	BX		7142 - D225	MD225	R40H5010	R40H5522	NR	NR
	Fd	BX		7142 - D225	MD225	R40H5010	R40H5522	NR	NR
	Fd	BX		7142 - D225	MD225	R40H5010	R40H5522	NR	NR
	Fd	BX		7108 - D184	MD184	R40H5010	R40H5519	NR	NR
	Fd	BX		7108 - D184	MD184	R40H5010	R40H5519	NR	NR
	Fd	BX		7142 - D225	MD225	R40H5010	R40H5522	NR	NR
	Fd	BX		7108 - D184	MD184	R40H5010	R40H5519	NR	NR
	Fd	BX		7108 - D184	MD184	R40H5010	R40H5519	NR	NR
	Fd	BX		7108 - D184	MD184	R40H5010	R40H5519	NR	NR
	Fd	BX		7142 - D225	MD225	R40H5010	R40H5522	NR	NR
	Fd	BX		7142 - D225	MD225	R40H5010	R40H5522	NR	NR
	Fd	BX		7142 - D225	MD225	R40H5010	R40H5522	NR	NR
	Fd	BX		7108 - D184	MD184	R40H5010	R40H5519	NR	NR
	Fd	BX		7108 - D184	MD184	R40H5010	R40H5519	NR	NR
	Fd	BX		7142 - D225	MD225	R40H5010	R40H5522	NR	NR
	Fd	BX		7108 - D184	MD184	R40H5010	R40H5519	NR	NR
	Fd	BX		7142 - D225	MD225	R40H5010	R40H5522	NR	NR
	Fd	BX		7108 - D184	MD184	R40H5010	R40H5519	NR	NR
	Fd	BX		7142 - D225	MD225	R40H5010	R40H5522	NR	NR
	Fd	BX		7108 - D184	MD184	R40H5010	R40H5519	NR	NR

37 - Also available as a New unit

38 - First design, may have external joining tube and uses steel pistons

39 - First design, uses steel pistons.

40 - For chrome plated steel version, use R4090070P

52 - 18" Length

53 - Power Brakes

72 - Phenolic/Steel Face

201 - Steel Piston

266 - 10 Stud, Hat Shaped

MERITOR DRUM OR ROTOR NO.	CALIPER OR CYLINDER BORE SIZE	MERITOR CALIPER OR WHEEL CYLINDER (LEFT)	MERITOR CALIPER OR WHEEL CYLINDER (RIGHT)	MERITOR CALIPER OR WHEEL CYLINDER REPAIR KIT	MERITOR CALIPER PISTON	MERITOR MASTER CYLINDER	MERITOR MASTER CYLINDER KIT	MERITOR BRAKE HOSE (LEFT)	MERITOR BRAKE HOSE (RIGHT)
									ITE(Cont.)
180, 1800, 1810, 1823, 1824, 1850, 1853, 1854 SERIES CONVENTIONAL TRUCK, SCHOOL BUS, TILT CAB(Cont.)									
23-122527-002[272]	2-19/32 "	R42R55314	R42R55314[37]	R40107771	R4090100P[72]	-	-	R458634[52]	R458634
23-123572-004[271]	2-19/32 "	R42R55245	R42R55245[38]	R402235118	R402238231[201]	-	-	R458634[52]	R458634
R44141629[269]	2-7/8 "	R42R55250	R42R55250[37]	R4066365	R4090096[72]	-	-	-	-
23-122527-002[272]	3-3/8 "	R42R55099	R42R55098[37]	R4066780	R4090021[201]	-	-	-	-
R44141608[267]	2-7/8 "	R42R55250	R42R55250[37]	R4066365	R4090096[72]	-	-	-	-
23-123572-004[271]	3-3/8 "	R42R55099	R42R55098[37]	R4066780	R4090021[201]	-	-	-	-
23-123552-004[266]	2-7/8 "	R42R55250	R42R55250[37]	R4066365	R4090096[72]	-	-	-	-
R44141628[269]	2-7/8 "	R42R55250	R42R55250[37]	R4066365	R4090096[72]	-	-	-	-
23-123572-004[271]	3-3/8 "	R42R55099	R42R55098[37]	R4066780	R4090021[201]	-	-	-	-
23-123552-004[266]	2-7/8 "	R42R55250	R42R55250[37]	R4066365	R4090096[72]	-	-	-	-
R44141858[275]	2-19/32 "	R42R55245	R42R55245[38]	R402235118	R402238231[201]	N/A[53]	-	-	-
R44141858[275]	2-7/8 "	R42R55250	R42R55250[37]	R4066365	R4090096[72]	-	-	-	-
23-122920-002[273]	3-3/8 "	R42R55099	R42R55098[37]	R4066780	R4090021[201]	-	-	-	-
R44141627[270]	2-7/8 "	R42R55250	R42R55250[37]	R4066365	R4090096[72]	-	-	-	-
23-122527-002[272]	3-3/8 "	R42R55099	R42R55098[37]	R4066780	R4090021[201]	-	-	-	-
R44141858[275]	2-7/8 "	R42R55250	R42R55250[37]	R4066365	R4090096[72]	-	-	-	-
23-122920-002[273]	3-3/8 "	R42R55099	R42R55098[37]	R4066780	R4090021[201]	-	-	-	-
23-122920-002[273]	3-3/8 "	R42R55099	R42R55098[37]	R4066780	R4090021[201]	-	-	-	-
23-122527-002[272]	2-7/8 "	R42R55250	R42R55250[37]	R4066365	R4090096[72]	-	-	-	-
23-123552-004[266]	2-7/8 "	R42R55250	R42R55250[37]	R4066365	R4090096[72]	-	-	-	-
R44141476[268]	2-7/8 "	R42R55250	R42R55250[37]	R4066365	R4090096[72]	-	-	-	-
23-122527-002[272]	2-7/8 "	R429218X	R429218X[39]	R406532	R4090070[40]	-	-	-	-
23-122920-002[273]	2-7/8 "	R429218X	R429218X[39]	R406532	R4090070[40]	-	-	-	-
R44141858[275]	3-3/8 "	R42R55099	R42R55098[37]	R4066780	R4090021[201]	-	-	-	-
23-123552-004[266]	2-7/8 "	R42R55250	R42R55250[37]	R4066365	R4090096[72]	-	-	-	-
R44141629[269]	2-7/8 "	R42R55250	R42R55250[37]	R4066365	R4090096[72]	-	-	-	-
23-123552-004[266]	2-7/8 "	R42R55250	R42R55250[37]	R4066365	R4090096[72]	-	-	-	-
R44141858[275]	3-3/8 "	R42R55099	R42R55098[37]	R4066780	R4090021[201]	-	-	-	-
R44141476[268]	2-7/8 "	R429218X	R429218X[39]	R406532	R4090070[40]	-	-	-	-
23-123572-004[271]	2-7/8 "	R42R55250	R42R55250[37]	R4066365	R4090096[72]	-	-	-	-
23-123552-004[266]	3-3/8 "	R42R55099	R42R55098[37]	R4066780	R4090021[201]	-	-	-	-
23-123552-004[266]	3-3/8 "	R42R55099	R42R55098[37]	R4066780	R4090021[201]	-	-	-	-
23-123572-004[271]	2-7/8 "	R42R55250	R42R55250[37]	R4066365	R4090096[72]	-	-	-	-
R44141627[270]	2-7/8 "	R42R55250	R42R55250[37]	R4066365	R4090096[72]	-	-	-	-
R44141476[268]	2-7/8 "	R42R55250	R42R55250[37]	R4066365	R4090096[72]	-	-	-	-
R44141858[275]	2-19/32 "	R42R55245	R42R55245[38]	R402235118	R402238231[201]	R4111885[53]	N/A	-	-
R44141858[275]	2-7/8 "	R42R55250	R42R55250[37]	R4066365	R4090096[72]	-	-	-	-
23-123572-004[271]	2-7/8 "	R42R55250	R42R55250[37]	R4066365	R4090096[72]	-	-	-	-
R44141476[268]	2-19/32 "	R42R55245	R42R55245[38]	R402235118	R402238231[201]	-	-	-	-
23-123572-004[271]	2-7/8 "	R42R55250	R42R55250[37]	R4066365	R4090096[72]	-	-	-	-
R44141476[268]	3-3/8 "	R42R55099	R42R55098[37]	R4066780	R4090021[201]	-	-	-	-
23-123552-004[266]	3-3/8 "	R42R55099	R42R55098[37]	R4066780	R4090021[201]	-	-	-	-
R44141628[269]	2-7/8 "	R42R55250	R42R55250[37]	R4066365	R4090096[72]	-	-	-	-
R44141858[275]	2-19/32 "	R42R55245	R42R55245[38]	R402235118	R402238231[201]	-	-	-	-
23-122527-002[272]	2-7/8 "	R42R55250	R42R55250[37]	R4066365	R4090096[72]	-	-	-	-
23-123572-004[271]	2-7/8 "	R429218X	R429218X[39]	R406532	R4090070[40]	-	-	-	-
23-123552-004[266]	2-7/8 "	R42R55250	R42R55250[37]	R4066365	R4090096[72]	-	-	-	-
R44141858[275]	3-3/8 "	R42R55099	R42R55098[37]	R4066780	R4090021[201]	-	-	-	-
R44141858[275]	2-19/32 "	R42R55245	R42R55245[38]	R402235118	R402238231[201]	-	-	R458635	R458635
R44141476[268]	3-3/8 "	R42R55099	R42R55098[37]	R4066780	R4090021[201]	-	-	-	-
R44141858[275]	3-3/8 "	R42R55099	R42R55098[37]	R4066780	R4090021[201]	-	-	-	-
R44141476[268]	2-7/8 "	R42R55250	R42R55250[37]	R4066365	R4090096[72]	-	-	-	-
R44141628[269]	2-7/8 "	R42R55250	R42R55250[37]	R4066365	R4090096[72]	-	-	-	-
23-122920-002[273]	2-7/8 "	R42R55250	R42R55250[37]	R4066365	R4090096[72]	-	-	-	-
R44141476[268]	3-3/8 "	R42R55099	R42R55098[37]	R4066780	R4090021[201]	-	-	-	-
23-122527-002[272]	3-3/8 "	R42R55099	R42R55098[37]	R4066780	R4090021[201]	-	-	-	-
R44141608[267]	2-7/8 "	R42R55250	R42R55250[37]	R4066365	R4090096[72]	-	-	-	-
23-123572-004[271]	2-19/32 "	R42R55245	R42R55245[38]	R402235118	R402238231[201]	-	-	-	-
23-122920-002[273]	2-7/8 "	R42R55250	R42R55250[37]	R4066365	R4090096[72]	-	-	-	-
23-122920-002[273]	2-19/32 "	R42R55245	R42R55245[38]	R402235118	R402238231[201]	-	-	-	-
23-123572-004[271]	2-7/8 "	R42R55250	R42R55250[37]	R4066365	R4090096[72]	-	-	-	-
23-122527-002[272]	2-19/32 "	R42R55245	R42R55245[38]	R402235118	R402238231[201]	-	-	-	-

267 - 10 Stud, U Shaped
268 - 5 Stud, Hat Shape
269 - 5 Stud, U Shape
270 - 5 Stud, U Shape, .766 Dia. Studs
271 - 6 Stud, Hat Shape
272 - 6 Stud, U Shape
273 - 5 Stud, U Shape, .780 Dia. Studs
275 - 5 Stud, U Shape, .656 Dia. Studs

MAKE MODEL YEAR AXLE CODE AXLE WEIGHT	AXLE & BRK. TYPE	BRK. MFG.	BRAKE SIZE	FMSI	MERITOR DISC PAD OR BRAKE SHOE	MERITOR GUIDE PIN OR RETURN SPRING KIT	MERITOR CALIPER HWD. KIT OR RETURN SPRING KIT	MERITOR ADJUSTER KIT (LEFT WHEEL)	MERITOR ADJUSTER KIT (RIGHT WHEEL)
ITE(Cont.)									
180, 1800, 1810, 1823, 1824, 1850, 1853, 1854 SERIES CONVENTIONAL TRUCK, SCHOOL BUS, TILT CAB(Cont.)									
1988									
	Fd	BX		7142 - D225	MD225	R40H5010	R40H5522	NR	NR
	Fd	BX		7108 - D184	MD184	R40H5010	R40H5519	NR	NR
	Fd	BX		7108 - D184	MD184	R40H5010	R40H5519	NR	NR
	Fd	BX		7108 - D184	MD184	R40H5010	R40H5519	NR	NR
	Fd	BX		7142 - D225	MD225	R40H5010	R40H5522	NR	NR
	Fd	BX		7108 - D184	MD184	R40H5010	R40H5519	NR	NR
	Fd	BX		7142 - D225	MD225	R40H5010	R40H5522	NR	NR
	Fd	BX		7142 - D225	MD225	R40H5010	R40H5522	NR	NR
	Fd	BX		7142 - D225	MD225	R40H5010	R40H5522	NR	NR
	Fd	BX		7108 - D184	MD184	R40H5010	R40H5519	NR	NR
	Fd	BX		7142 - D225	MD225	R40H5010	R40H5522	NR	NR
	Fd	BX		7108 - D184	MD184	R40H5010	R40H5519	NR	NR
	Fd	BX		7142 - D225	MD225	R40H5010	R40H5522	NR	NR
	Fd	BX		7108 - D184	MD184	R40H5010	R40H5519	NR	NR
	Rd	BX		7108 - D184	MD184	R40H5010	R40H5519	NR	NR
	Rd	BX		7108 - D184	MD184	R40H5010	R40H5519	NR	NR
	Rd	BX		7108 - D184	MD184	R40H5010	R40H5519	NR	NR
	Rd	BX		7108 - D184	MD184	R40H5010	R40H5519	NR	NR
	Rd	BX		7108 - D184	MD184	R40H5010	R40H5519	NR	NR
	Rd	BX		7108 - D184	MD184	R40H5010	R40H5519	NR	NR
	Rd	BX		7108 - D184	MD184	R40H5010	R40H5519	NR	NR
	Rd	BX		7108 - D184	MD184	R40H5010	R40H5519	NR	NR
	Rd	BX		7108 - D184	MD184	R40H5010	R40H5519	NR	NR
	Rd	BX		7108 - D184	MD184	R40H5010	R40H5519	NR	NR
	Rd	BX		7108 - D184	MD184	R40H5010	R40H5519	NR	NR
	Rd	BX		7108 - D184	MD184	R40H5010	R40H5519	NR	NR
1987									
	Fd	BX		7108 - D184	MD184	R40H5010	R40H5519	NR	NR
	Fd	BX		7108 - D184	MD184	R40H5010	R40H5519	NR	NR
	Fd	BX		7108 - D184	MD184	R40H5010	R40H5519	NR	NR
	Fd	BX		7108 - D184	MD184	R40H5010	R40H5519	NR	NR
	Fd	BX		7108 - D184	MD184	R40H5010	R40H5519	NR	NR
	Fd	BX		7108 - D184	MD184	R40H5010	R40H5519	NR	NR
	Fd	BX		7108 - D184	MD184	R40H5010	R40H5519	NR	NR
	Fd	BX		7108 - D184	MD184	R40H5010	R40H5519	NR	NR
	Fd	BX		7108 - D184	MD184	R40H5010	R40H5519	NR	NR
	Fd	BX		7108 - D184	MD184	R40H5010	R40H5519	NR	NR
	Fd	BX		7108 - D184	MD184	R40H5010	R40H5519	NR	NR
	Fd	BX		7108 - D184	MD184	R40H5010	R40H5519	NR	NR
	Fd	BX		7108 - D184	MD184	R40H5010	R40H5519	NR	NR
	Fd	BX		7108 - D184	MD184	R40H5010	R40H5519	NR	NR
	Fd	BX		7108 - D184	MD184	R40H5010	R40H5519	NR	NR
	Fd	BX		7108 - D184	MD184	R40H5010	R40H5519	NR	NR
	Fd	BX		7108 - D184	MD184	R40H5010	R40H5519	NR	NR
	Fd	BX		7108 - D184	MD184	R40H5010	R40H5519	NR	NR
	Fd	BX		7108 - D184	MD184	R40H5010	R40H5519	NR	NR
	Fd	BX		7108 - D184	MD184	R40H5010	R40H5519	NR	NR
	Fd	BX		7108 - D184	MD184	R40H5010	R40H5519	NR	NR
	Fd	BX		7108 - D184	MD184	R40H5010	R40H5519	NR	NR
	Fd	BX		7108 - D184	MD184	R40H5010	R40H5519	NR	NR
	Fd	BX		7108 - D184	MD184	R40H5010	R40H5519	NR	NR
	Fd	BX		7108 - D184	MD184	R40H5010	R40H5519	NR	NR
	Fd	BX		7108 - D184	MD184	R40H5010	R40H5519	NR	NR
	Fd	BX		7108 - D184	MD184	R40H5010	R40H5519	NR	NR
	Fd	BX		7108 - D184	MD184	R40H5010	R40H5519	NR	NR
	Fd	BX		7108 - D184	MD184	R40H5010	R40H5519	NR	NR
	Fd	BX		7108 - D184	MD184	R40H5010	R40H5519	NR	NR
	Fd	BX		7108 - D184	MD184	R40H5010	R40H5519	NR	NR
	Fd	BX		7108 - D184	MD184	R40H5010	R40H5519	NR	NR
	Fd	BX		7108 - D184	MD184	R40H5010	R40H5519	NR	NR
	Fd	BX		7142 - D225	MD225	R40H5010	R40H5522	NR	NR
	Fd	BX		7108 - D184	MD184	R40H5010	R40H5519	NR	NR
	Fd	BX		7108 - D184	MD184	R40H5010	R40H5519	NR	NR
	Fd	BX		7108 - D184	MD184	R40H5010	R40H5519	NR	NR
	Fd	BX		7108 - D184	MD184	R40H5010	R40H5519	NR	NR
	Fd	BX		7108 - D184	MD184	R40H5010	R40H5519	NR	NR
	Fd	BX		7108 - D184	MD184	R40H5010	R40H5519	NR	NR
	Fd	BX		7108 - D184	MD184	R40H5010	R40H5519	NR	NR
	Fd	BX		7108 - D184	MD184	R40H5010	R40H5519	NR	NR
	Fd	BX		7108 - D184	MD184	R40H5010	R40H5519	NR	NR
	Fd	BX		7108 - D184	MD184	R40H5010	R40H5519	NR	NR
	Fd	BX		7108 - D184	MD184	R40H5010	R40H5519	NR	NR
	Fd	BX		7108 - D184	MD184	R40H5010	R40H5519	NR	NR
	Rd	BX		7108 - D184	MD184	R40H5010	R40H5519	NR	NR

37 - Also available as a New unit

38 - First design, may have external joining tube and uses steel pistons

39 - First design, uses steel pistons.

40 - For chrome plated steel version, use R4090070P

53 - Power Brakes

72 - Phenolic/Steel Face

201 - Steel Piston

266 - 10 Stud, Hat Shaped

267 - 10 Stud, U Shaped

MERITOR DRUM OR ROTOR NO.	CALIPER OR CYLINDER BORE SIZE	MERITOR CALIPER OR WHEEL CYLINDER (LEFT)	MERITOR CALIPER OR WHEEL CYLINDER (RIGHT)	MERITOR CALIPER OR WHEEL CYLINDER REPAIR KIT	MERITOR CALIPER PISTON	MERITOR MASTER CYLINDER	MERITOR MASTER CYLINDER KIT	MERITOR BRAKE HOSE (LEFT)	MERITOR BRAKE HOSE (RIGHT)
									ITE(Cont.)
180, 1800, 1810, 1823, 1824, 1850, 1853, 1854 SERIES CONVENTIONAL TRUCK, SCHOOL BUS, TILT CAB(Cont.)									
23-123572-004[271]	2-7/8 "	R42R55250	R42R55250[37]	R4066365	R4090096[72]	-	-	-	-
23-123552-004[266]	2-19/32 "	R42R55245	R42R55245[38]	R402235118	R402238231[201]	-	-	-	-
23-122920-002[273]	3-3/8 "	R42R55099	R42R55098[37]	R4066780	R4090021[201]	-	-	-	-
R44141858[275]	2-19/32 "	R42R55245	R42R55245[38]	R402235118	R402238231[201]	-	-	R458636	R458636
23-123552-004[266]	2-7/8 "	R429218X	R429218X[39]	R406532	R4090070[40]	-	-	-	-
23-123572-004[271]	3-3/8 "	R42R55099	R42R55098[37]	R4066780	R4090021[201]	-	-	-	-
23-122920-002[273]	2-7/8 "	R42R55250	R42R55250[37]	R4066365	R4090096[72]	-	-	-	-
R44141858[275]	2-7/8 "	R429218X	R429218X[39]	R406532	R4090070[40]	-	-	-	-
R44141608[267]	2-7/8 "	R42R55250	R42R55250[37]	R4066365	R4090096[72]	-	-	-	-
R44141476[268]	3-3/8 "	R42R55099	R42R55098[37]	R4066780	R4090021[201]	-	-	-	-
R44141627[270]	2-7/8 "	R42R55250	R42R55250[37]	R4066365	R4090096[72]	-	-	-	-
23-123552-004[266]	3-3/8 "	R42R55099	R42R55098[37]	R4066780	R4090021[201]	-	-	-	-
23-122527-002[272]	2-7/8 "	R42R55250	R42R55250[37]	R4066365	R4090096[72]	-	-	-	-
R44141858[275]	2-19/32 "	R42R55245	R42R55245[38]	R402235118	R402238231[201]	-	-	N/A	N/A
R44141608[267]	2-19/32 "	R42R55245	R42R55245[38]	R402235118	R402238231[201]	-	-	-	-
23-122527-002[272]	2-19/32 "	R42R55245	R42R55245[38]	R40107771	R4090100P[201]	-	-	-	-
23-122527-002[272]	2-19/32 "	R42R55245	R42R55245[38]	R40107771	R4090100P[201]	-	-	-	-
R44141627[270]	2-19/32 "	R42R55245	R42R55245[38]	R402235118	R402238231[201]	-	-	-	-
23-122527-002[272]	2-19/32 "	R42R55245	R42R55245[38]	R40107771	R4090100P[201]	-	-	-	-
23-122527-002[272]	2-19/32 "	R42R55245	R42R55245[38]	R40107771	R4090100P[201]	-	-	-	-
23-123552-004[266]	2-19/32 "	R42R55245	R42R55245[38]	R402235118	R402238231[201]	-	-	-	-
23-122527-002[272]	2-19/32 "	R42R55245	R42R55245[38]	R40107771	R4090100P[201]	-	-	-	-
R44141628[269]	2-19/32 "	R42R55245	R42R55245[38]	R402235118	R402238231[201]	-	-	-	-
23-122527-002[272]	2-19/32 "	R42R55245	R42R55245[38]	R40107771	R4090100P[201]	-	-	-	-
23-122527-002[272]	2-19/32 "	R42R55245	R42R55245[38]	R402235118	R402238231[201]	-	-	-	-
23-123572-004[271]	2-19/32 "	R42R55245	R42R55245[38]	R402235118	R402238231[201]	-	-	-	-
R44141629[269]	2-19/32 "	R42R55245	R42R55245[38]	R402235118	R402238231[201]	-	-	-	-
R44141858[275]	2-19/32 "	R42R55245	R42R55245[38]	R402235118	R402238231[201]	-	-	N/A	N/A
23-123552-004[266]	3-3/8 "	R42R55099	R42R55098[37]	R4066780	R4090021[201]	-	-	-	-
23-123572-004[271]	3-3/8 "	R42R55099	R42R55098[37]	R4066780	R4090021[201]	-	-	-	-
R44141476[268]	2-19/32 "	R42R55245	R42R55245[38]	R402235118	R402238231[201]	-	-	-	-
R44141858[275]	3-3/8 "	R42R55099	R42R55098[37]	R4066780	R4090021[201]	-	-	-	-
R44141858[275]	2-19/32 "	R42R55245	R42R55245[38]	R402235118	R402238231[201]	-	-	R458635	R458635
R44141476[268]	3-3/8 "	R42R55099	R42R55098[37]	R4066780	R4090021[201]	-	-	-	-
R44141858[275]	3-3/8 "	R42R55099	R42R55098[37]	R4066780	R4090021[201]	-	-	-	-
23-122920-002[273]	3-3/8 "	R42R55099	R42R55098[37]	R4066780	R4090021[201]	-	-	-	-
23-122920-002[273]	2-19/32 "	R42R55245	R42R55245[38]	R402235118	R402238231[201]	-	-	-	-
23-123572-004[271]	3-3/8 "	R42R55099	R42R55098[37]	R4066780	R4090021[201]	-	-	-	-
23-122527-002[272]	2-19/32 "	R42R55245	R42R55245[38]	R402235118	R402238231[201]	-	-	-	-
23-123552-004[266]	3-3/8 "	R42R55099	R42R55098[37]	R4066780	R4090021[201]	-	-	-	-
R44141476[268]	3-3/8 "	R42R55099	R42R55098[37]	R4066780	R4090021[201]	-	-	-	-
23-122527-002[272]	3-3/8 "	R42R55099	R42R55098[37]	R4066780	R4090021[201]	-	-	-	-
23-123552-004[266]	2-7/8 "	R429218X	R429218X[39]	R406532	R4090070[40]	-	-	-	-
R44141858[275]	3-3/8 "	R42R55099	R42R55098[37]	R4066780	R4090021[201]	-	-	-	-
23-122527-002[272]	3-3/8 "	R42R55099	R42R55098[37]	R4066780	R4090021[201]	-	-	-	-
R44141476[268]	3-3/8 "	R42R55099	R42R55098[37]	R4066780	R4090021[201]	-	-	-	-
23-122920-002[273]	3-3/8 "	R42R55099	R42R55098[37]	R4066780	R4090021[201]	-	-	-	-
R44141858[275]	2-19/32 "	R42R55245	R42R55245[38]	R402235118	R402238231[201]	N/A[53]	-	-	-
R44141858[275]	2-19/32 "	R42R55245	R42R55245[38]	R402235118	R402238231[201]	R4111885[53]	N/A	-	-
23-123552-004[266]	3-3/8 "	R42R55099	R42R55098[37]	R4066780	R4090021[201]	-	-	-	-
23-122920-002[273]	3-3/8 "	R42R55099	R42R55098[37]	R4066780	R4090021[201]	-	-	-	-
R44141476[268]	3-3/8 "	R42R55099	R42R55098[37]	R4066780	R4090021[201]	-	-	-	-
23-123572-004[271]	3-3/8 "	R42R55099	R42R55098[37]	R4066780	R4090021[201]	-	-	-	-
23-123572-004[271]	2-19/32 "	R42R55245	R42R55245[38]	R402235118	R402238231[201]	-	-	-	-
23-122920-002[273]	3-3/8 "	R42R55099	R42R55098[37]	R4066780	R4090021[201]	-	-	-	-
23-123552-004[266]	2-19/32 "	R42R55245	R42R55245[38]	R402235118	R402238231[201]	-	-	-	-
R44141858[275]	2-19/32 "	R42R55245	R42R55245[38]	R402235118	R402238231[201]	-	-	-	-
R44141858[275]	2-19/32 "	R42R55245	R42R55245[38]	R402235118	R402238231[201]	-	-	R458636	R458636
23-123552-004[266]	3-3/8 "	R42R55099	R42R55098[37]	R4066780	R4090021[201]	-	-	-	-
R44141858[275]	3-3/8 "	R42R55099	R42R55098[37]	R4066780	R4090021[201]	-	-	-	-
23-122527-002[272]	3-3/8 "	R42R55099	R42R55098[37]	R4066780	R4090021[201]	-	-	-	-
R44141608[267]	2-19/32 "	R42R55245	R42R55245[38]	R402235118	R402238231[201]	-	-	-	-

268 - 5 Stud, Hat Shape
269 - 5 Stud, U Shape
270 - 5 Stud, U Shape, .766 Dia. Studs
271 - 6 Stud, Hat Shape
272 - 6 Stud, U Shape
273 - 5 Stud, U Shape, .780 Dia. Studs
275 - 5 Stud, U Shape, .656 Dia. Studs

MAKE MODEL YEAR AXLE CODE AXLE WEIGHT	AXLE & BRK. TYPE	BRK. MFG.	BRAKE SIZE	FMSI	MERITOR DISC PAD OR BRAKE SHOE	MERITOR GUIDE PIN OR RETURN SPRING KIT	MERITOR CALIPER HWD. KIT OR RETURN SPRING KIT	MERITOR ADJUSTER KIT (LEFT WHEEL)	MERITOR ADJUSTER KIT (RIGHT WHEEL)
ITE(Cont.)									
180, 1800, 1810, 1823, 1824, 1850, 1853, 1854 SERIES CONVENTIONAL TRUCK, SCHOOL BUS, TILT CAB(Cont.)									
1987									
	Rd	BX		7108 - D184	MD184	R40H5010	R40H5519	NR	NR
	Rd	BX		7108 - D184	MD184	R40H5010	R40H5519	NR	NR
	Rd	BX		7108 - D184	MD184	R40H5010	R40H5519	NR	NR
	Rd	BX		7108 - D184	MD184	R40H5010	R40H5519	NR	NR
	Rd	BX		7108 - D184	MD184	R40H5010	R40H5519	NR	NR
	Rd	BX		7108 - D184	MD184	R40H5010	R40H5519	NR	NR
	Rd	BX		7108 - D184	MD184	R40H5010	R40H5519	NR	NR
	Rd	BX		7108 - D184	MD184	R40H5010	R40H5519	NR	NR
	Rd	BX		7108 - D184	MD184	R40H5010	R40H5519	NR	NR
	Rd	BX		7108 - D184	MD184	R40H5010	R40H5519	NR	NR
	Rd	BX		7108 - D184	MD184	R40H5010	R40H5519	NR	NR
	Rd	BX		7108 - D184	MD184	R40H5010	R40H5519	NR	NR
Code: 04146	Fd	BX		7142 - D225	MD225	R40H5010	R40H5522	NR	NR
	Fd	BX		7142 - D225	MD225	R40H5010	R40H5522	NR	NR
	Fd	BX		7142 - D225	MD225	R40H5010	R40H5522	NR	NR
	Fd	BX		7142 - D225	MD225	R40H5010	R40H5522	NR	NR
	Fd	BX		7142 - D225	MD225	R40H5010	R40H5522	NR	NR
	Fd	BX		7142 - D225	MD225	R40H5010	R40H5522	NR	NR
	Fd	BX		7142 - D225	MD225	R40H5010	R40H5522	NR	NR
	Fd	BX		7142 - D225	MD225	R40H5010	R40H5522	NR	NR
	Fd	BX		7142 - D225	MD225	R40H5010	R40H5522	NR	NR
	Fd	BX		7142 - D225	MD225	R40H5010	R40H5522	NR	NR
	Fd	BX		7142 - D225	MD225	R40H5010	R40H5522	NR	NR
	Fd	BX		7142 - D225	MD225	R40H5010	R40H5522	NR	NR
	Fd	BX		7142 - D225	MD225	R40H5010	R40H5522	NR	NR
	Fd	BX		7142 - D225	MD225	R40H5010	R40H5522	NR	NR
	Fd	BX		7142 - D225	MD225	R40H5010	R40H5522	NR	NR
	Fd	BX		7142 - D225	MD225	R40H5010	R40H5522	NR	NR
	Fd	BX		7142 - D225	MD225	R40H5010	R40H5522	NR	NR
	Fd	BX		7142 - D225	MD225	R40H5010	R40H5522	NR	NR
	Fd	BX		7142 - D225	MD225	R40H5010	R40H5522	NR	NR
	Fd	BX		7142 - D225	MD225	R40H5010	R40H5522	NR	NR
	Fd	BX		7142 - D225	MD225	R40H5010	R40H5522	NR	NR
	Fd	BX		7142 - D225	MD225	R40H5010	R40H5522	NR	NR
	Fd	BX		7142 - D225	MD225	R40H5010	R40H5522	NR	NR
Code: 04238	Fd	BX		7142 - D225	MD225	R40H5010	R40H5522	NR	NR
	Fd	BX		7142 - D225	MD225	R40H5010	R40H5522	NR	NR
	Fd	BX		7142 - D225	MD225	R40H5010	R40H5522	NR	NR
	Fd	BX		7142 - D225	MD225	R40H5010	R40H5522	NR	NR
	Fd	BX		7142 - D225	MD225	R40H5010	R40H5522	NR	NR
	Fd	BX		7142 - D225	MD225	R40H5010	R40H5522	NR	NR
	Fd	BX		7142 - D225	MD225	R40H5010	R40H5522	NR	NR
	Fd	BX		7142 - D225	MD225	R40H5010	R40H5522	NR	NR
	Fd	BX		7142 - D225	MD225	R40H5010	R40H5522	NR	NR
	Fd	BX		7142 - D225	MD225	R40H5010	R40H5522	NR	NR
	Fd	BX		7142 - D225	MD225	R40H5010	R40H5522	NR	NR
	Fd	BX		7142 - D225	MD225	R40H5010	R40H5522	NR	NR
	Fd	BX		7142 - D225	MD225	R40H5010	R40H5522	NR	NR
	Fd	BX		7142 - D225	MD225	R40H5010	R40H5522	NR	NR
	Fd	BX		7142 - D225	MD225	R40H5010	R40H5522	NR	NR
	Fd	BX		7142 - D225	MD225	R40H5010	R40H5522	NR	NR
	Fd	BX		7142 - D225	MD225	R40H5010	R40H5522	NR	NR
	Fd	BX		7142 - D225	MD225	R40H5010	R40H5522	NR	NR
	Fd	BX		7142 - D225	MD225	R40H5010	R40H5522	NR	NR
1986									
	Fd	BX		7108 - D184	MD184	R40H5010	R40H5519	NR	NR
	Fd	BX		7108 - D184	MD184	R40H5010	R40H5519	NR	NR
	Fd	BX		7108 - D184	MD184	R40H5010	R40H5519	NR	NR
	Fd	BX		7108 - D184	MD184	R40H5010	R40H5519	NR	NR
	Fd	BX		7108 - D184	MD184	R40H5010	R40H5519	NR	NR
	Fd	BX		7108 - D184	MD184	R40H5010	R40H5519	NR	NR
	Fd	BX		7108 - D184	MD184	R40H5010	R40H5519	NR	NR
	Fd	BX		7108 - D184	MD184	R40H5010	R40H5519	NR	NR
	Fd	BX		7108 - D184	MD184	R40H5010	R40H5519	NR	NR
	Fd	BX		7108 - D184	MD184	R40H5010	R40H5519	NR	NR

37 - Also available as a New unit

38 - First design, may have external joining tube and uses steel pistons

39 - First design, uses steel pistons.

40 - For chrome plated steel version, use R4090070P

53 - Power Brakes

72 - Phenolic/Steel Face

201 - Steel Piston

266 - 10 Stud, Hat Shaped

267 - 10 Stud, U Shaped

MERITOR DRUM OR ROTOR NO.	CALIPER OR CYLINDER BORE SIZE	MERITOR CALIPER OR WHEEL CYLINDER (LEFT)	MERITOR CALIPER OR WHEEL CYLINDER (RIGHT)	MERITOR CALIPER OR WHEEL CYLINDER REPAIR KIT	MERITOR CALIPER PISTON	MERITOR MASTER CYLINDER	MERITOR MASTER CYLINDER KIT	MERITOR BRAKE HOSE (LEFT)	MERITOR BRAKE HOSE (RIGHT)
									ITE(Cont.)
180, 1800, 1810, 1823, 1824, 1850, 1853, 1854 SERIES CONVENTIONAL TRUCK, SCHOOL BUS, TILT CAB(Cont.)									
23-122527-002[272]	2-19/32 "	R42R55245	R42R55245[38]	R402235118	R402238231[201]	-	-	-	-
23-123572-004[271]	2-19/32 "	R42R55245	R42R55245[38]	R402235118	R402238231[201]	-	-	-	-
R44141629[269]	2-19/32 "	R42R55245	R42R55245[38]	R402235118	R402238231[201]	-	-	-	-
23-122527-002[272]	2-19/32 "	R42R55245	R42R55245[38]	R40107771	R4090100P[201]	-	-	-	-
R44141628[269]	2-19/32 "	R42R55245	R42R55245[38]	R402235118	R402238231[201]	-	-	-	-
R44141627[270]	2-19/32 "	R42R55245	R42R55245[38]	R402235118	R402238231[201]	-	-	-	-
23-122527-002[272]	2-19/32 "	R42R55245	R42R55245[38]	R40107771	R4090100P[201]	-	-	-	-
23-122527-002[272]	2-19/32 "	R42R55245	R42R55245[38]	R40107771	R4090100P[201]	-	-	-	-
23-122527-002[272]	2-19/32 "	R42R55245	R42R55245[38]	R40107771	R4090100P[201]	-	-	-	-
23-122527-002[272]	2-19/32 "	R42R55245	R42R55245[38]	R40107771	R4090100P[201]	-	-	-	-
23-123552-004[266]	2-19/32 "	R42R55245	R42R55245[38]	R402235118	R402238231[201]	-	-	-	-
23-122527-002[272]	2-19/32 "	R42R55245	R42R55245[38]	R40107771	R4090100P[201]	-	-	-	-
23-122920-002[273]	2-7/8 "	R42R55250	R42R55250[37]	R4066365	R4090096[72]	-	-	-	-
23-122527-002[272]	2-7/8 "	R42R55250	R42R55250[37]	R4066365	R4090096[72]	-	-	-	-
R44141858[275]	2-7/8 "	R42R55250	R42R55250[37]	R4066365	R4090096[72]	-	-	-	-
23-122527-002[272]	2-7/8 "	R42R55250	R42R55250[37]	R4066365	R4090096[72]	-	-	-	-
R44141476[268]	2-7/8 "	R42R55250	R42R55250[37]	R4066365	R4090096[72]	-	-	-	-
23-123552-004[266]	2-7/8 "	R42R55250	R42R55250[37]	R4066365	R4090096[72]	-	-	-	-
23-123572-004[271]	2-7/8 "	R429218X	R429218X[39]	R406532	R4090070[40]	-	-	-	-
R44141476[268]	2-7/8 "	R429218X	R429218X[39]	R406532	R4090070[40]	-	-	-	-
23-122527-002[272]	2-7/8 "	R42R55250	R42R55250[37]	R4066365	R4090096[72]	-	-	-	-
23-122920-002[273]	2-7/8 "	R42R55250	R42R55250[37]	R4066365	R4090096[72]	-	-	-	-
23-123552-004[266]	2-7/8 "	R42R55250	R42R55250[37]	R4066365	R4090096[72]	-	-	-	-
R44141858[275]	2-7/8 "	R429218X	R429218X[39]	R406532	R4090070[40]	-	-	-	-
23-123572-004[271]	2-7/8 "	R42R55250	R42R55250[37]	R4066365	R4090096[72]	-	-	-	-
23-123572-004[271]	2-7/8 "	R42R55250	R42R55250[37]	R4066365	R4090096[72]	-	-	-	-
23-122920-002[273]	2-7/8 "	R42R55250	R42R55250[37]	R4066365	R4090096[72]	-	-	-	-
R44141858[275]	2-7/8 "	R42R55250	R42R55250[37]	R4066365	R4090096[72]	-	-	-	-
23-123552-004[266]	2-7/8 "	R42R55250	R42R55250[37]	R4066365	R4090096[72]	-	-	-	-
23-123572-004[271]	2-7/8 "	R42R55250	R42R55250[37]	R4066365	R4090096[72]	-	-	-	-
23-122527-002[272]	2-7/8 "	R429218X	R429218X[39]	R406532	R4090070[40]	-	-	-	-
R44141476[268]	2-7/8 "	R42R55250	R42R55250[37]	R4066365	R4090096[72]	-	-	-	-
R44141858[275]	2-7/8 "	R42R55250	R42R55250[37]	R4066365	R4090096[72]	-	-	-	-
R44141476[268]	2-7/8 "	R42R55250	R42R55250[37]	R4066365	R4090096[72]	-	-	-	-
23-122920-002[273]	2-7/8 "	R429218X	R429218X[39]	R406532	R4090070[40]	-	-	-	-
R44141628[269]	2-7/8 "	R42R55250	R42R55250[37]	R4066365	R4090096[72]	-	-	-	-
R44141627[270]	2-7/8 "	R42R55250	R42R55250[37]	R4066365	R4090096[72]	-	-	-	-
23-123552-004[266]	2-7/8 "	R42R55250	R42R55250[37]	R4066365	R4090096[72]	-	-	-	-
R44141627[270]	2-7/8 "	R42R55250	R42R55250[37]	R4066365	R4090096[72]	-	-	-	-
23-123552-004[266]	2-7/8 "	R42R55250	R42R55250[37]	R4066365	R4090096[72]	-	-	-	-
23-123572-004[271]	2-7/8 "	R42R55250	R42R55250[37]	R4066365	R4090096[72]	-	-	-	-
23-123552-004[266]	2-7/8 "	R42R55250	R42R55250[37]	R4066365	R4090096[72]	-	-	-	-
R44141627[270]	2-7/8 "	R42R55250	R42R55250[37]	R4066365	R4090096[72]	-	-	-	-
R44141608[267]	2-7/8 "	R42R55250	R42R55250[37]	R4066365	R4090096[72]	-	-	-	-
R44141629[269]	2-7/8 "	R42R55250	R42R55250[37]	R4066365	R4090096[72]	-	-	-	-
23-123572-004[271]	2-7/8 "	R42R55250	R42R55250[37]	R4066365	R4090096[72]	-	-	-	-
R44141628[269]	2-7/8 "	R42R55250	R42R55250[37]	R4066365	R4090096[72]	-	-	-	-
R44141608[267]	2-7/8 "	R42R55250	R42R55250[37]	R4066365	R4090096[72]	-	-	-	-
R44141629[269]	2-7/8 "	R42R55250	R42R55250[37]	R4066365	R4090096[72]	-	-	-	-
23-123572-004[271]	2-7/8 "	R42R55250	R42R55250[37]	R4066365	R4090096[72]	-	-	-	-
R44141608[267]	2-7/8 "	R42R55250	R42R55250[37]	R4066365	R4090096[72]	-	-	-	-
R44141628[269]	2-7/8 "	R42R55250	R42R55250[37]	R4066365	R4090096[72]	-	-	-	-
23-123572-004[271]	2-19/32 "	R42R55245	R42R55245[38]	R402235118	R402238231[201]	-	-	-	-
R44141476[268]	2-19/32 "	R42R55245	R42R55245[38]	R402235118	R402238231[201]	-	-	-	-
23-122527-002[272]	3-3/8 "	R42R55099	R42R55098[37]	R4066780	R4090021[201]	-	-	-	-
R44141858[275]	2-19/32 "	R42R55245	R42R55245[38]	R402235118	R402238231[201]	N/A[53]	-	-	-
23-122527-002[272]	2-19/32 "	R42R55245	R42R55245[38]	R402235118	R402238231[201]	-	-	-	-
23-123552-004[266]	3-3/8 "	R42R55099	R42R55098[37]	R4066780	R4090021[201]	-	-	-	-
23-123572-004[271]	3-3/8 "	R42R55099	R42R55098[37]	R4066780	R4090021[201]	-	-	-	-
R44141858[275]	2-19/32 "	R42R55245	R42R55245[38]	R402235118	R402238231[201]	-	-	R458635	R458635
R44141858[275]	3-3/8 "	R42R55099	R42R55098[37]	R4066780	R4090021[201]	-	-	-	-
R44141858[275]	2-19/32 "	R42R55245	R42R55245[38]	R402235118	R402238231[201]	-	-	R458636	R458636

268 - 5 Stud, Hat Shape

269 - 5 Stud, U Shape

270 - 5 Stud, U Shape, .766 Dia. Studs

271 - 6 Stud, Hat Shape

272 - 6 Stud, U Shape

273 - 5 Stud, U Shape, .780 Dia. Studs

275 - 5 Stud, U Shape, .656 Dia. Studs

MAKE MODEL YEAR AXLE CODE AXLE WEIGHT	AXLE & BRK. TYPE	BRK. MFG.	BRAKE SIZE	FMSI	MERITOR DISC PAD OR BRAKE SHOE	MERITOR GUIDE PIN OR RETURN SPRING KIT	MERITOR CALIPER HWD. KIT OR RETURN SPRING KIT	MERITOR ADJUSTER KIT (LEFT WHEEL)	MERITOR ADJUSTER KIT (RIGHT WHEEL)
ITE(Cont.)									
180, 1800, 1810, 1823, 1824, 1850, 1853, 1854 SERIES CONVENTIONAL TRUCK, SCHOOL BUS, TILT CAB(Cont.)									
1986									
	Fd	BX		7108 - D184	MD184	R40H5010	R40H5519	NR	NR
	Fd	BX		7108 - D184	MD184	R40H5010	R40H5519	NR	NR
	Fd	BX		7108 - D184	MD184	R40H5010	R40H5519	NR	NR
	Fd	BX		7108 - D184	MD184	R40H5010	R40H5519	NR	NR
	Fd	BX		7108 - D184	MD184	R40H5010	R40H5519	NR	NR
	Fd	BX		7108 - D184	MD184	R40H5010	R40H5519	NR	NR
	Fd	BX		7108 - D184	MD184	R40H5010	R40H5519	NR	NR
	Fd	BX		7108 - D184	MD184	R40H5010	R40H5519	NR	NR
	Fd	BX		7108 - D184	MD184	R40H5010	R40H5519	NR	NR
	Fd	BX		7108 - D184	MD184	R40H5010	R40H5519	NR	NR
	Fd	BX		7108 - D184	MD184	R40H5010	R40H5519	NR	NR
	Fd	BX		7108 - D184	MD184	R40H5010	R40H5519	NR	NR
	Fd	BX		7108 - D184	MD184	R40H5010	R40H5519	NR	NR
	Fd	BX		7108 - D184	MD184	R40H5010	R40H5519	NR	NR
	Fd	BX		7108 - D184	MD184	R40H5010	R40H5519	NR	NR
	Fd	BX		7108 - D184	MD184	R40H5010	R40H5519	NR	NR
	Fd	BX		7108 - D184	MD184	R40H5010	R40H5519	NR	NR
	Fd	BX		7108 - D184	MD184	R40H5010	R40H5519	NR	NR
	Fd	BX		7108 - D184	MD184	R40H5010	R40H5519	NR	NR
	Fd	BX		7108 - D184	MD184	R40H5010	R40H5519	NR	NR
	Fd	BX		7108 - D184	MD184	R40H5010	R40H5519	NR	NR
	Fd	BX		7108 - D184	MD184	R40H5010	R40H5519	NR	NR
	Fd	BX		7108 - D184	MD184	R40H5010	R40H5519	NR	NR
	Fd	BX		7142 - D225	MD225	R40H5010	R40H5522	NR	NR
	Fd	BX		7108 - D184	MD184	R40H5010	R40H5519	NR	NR
	Fd	BX		7108 - D184	MD184	R40H5010	R40H5519	NR	NR
	Fd	BX		7108 - D184	MD184	R40H5010	R40H5519	NR	NR
	Rd	BX		7108 - D184	MD184	R40H5010	R40H5519	NR	NR
	Rd	BX		7108 - D184	MD184	R40H5010	R40H5519	NR	NR
	Rd	BX		7108 - D184	MD184	R40H5010	R40H5519	NR	NR
	Rd	BX		7108 - D184	MD184	R40H5010	R40H5519	NR	NR
	Rd	BX		7108 - D184	MD184	R40H5010	R40H5519	NR	NR
	Rd	BX		7108 - D184	MD184	R40H5010	R40H5519	NR	NR
	Rd	BX		7108 - D184	MD184	R40H5010	R40H5519	NR	NR
	Rd	BX		7108 - D184	MD184	R40H5010	R40H5519	NR	NR
	Rd	BX		7108 - D184	MD184	R40H5010	R40H5519	NR	NR
	Rd	BX		7108 - D184	MD184	R40H5010	R40H5519	NR	NR
	Rd	BX		7108 - D184	MD184	R40H5010	R40H5519	NR	NR
	Rd	BX		7108 - D184	MD184	R40H5010	R40H5519	NR	NR
	Rd	BX		7108 - D184	MD184	R40H5010	R40H5519	NR	NR
	Rd	BX		7108 - D184	MD184	R40H5010	R40H5519	NR	NR
Code: 04146	Fd	BX		7142 - D225	MD225	R40H5010	R40H5522	NR	NR
	Fd	BX		7142 - D225	MD225	R40H5010	R40H5522	NR	NR
	Fd	BX		7142 - D225	MD225	R40H5010	R40H5522	NR	NR
	Fd	BX		7142 - D225	MD225	R40H5010	R40H5522	NR	NR
	Fd	BX		7142 - D225	MD225	R40H5010	R40H5522	NR	NR
	Fd	BX		7142 - D225	MD225	R40H5010	R40H5522	NR	NR
	Fd	BX		7142 - D225	MD225	R40H5010	R40H5522	NR	NR
	Fd	BX		7142 - D225	MD225	R40H5010	R40H5522	NR	NR
	Fd	BX		7142 - D225	MD225	R40H5010	R40H5522	NR	NR
	Fd	BX		7142 - D225	MD225	R40H5010	R40H5522	NR	NR
	Fd	BX		7142 - D225	MD225	R40H5010	R40H5522	NR	NR
	Fd	BX		7142 - D225	MD225	R40H5010	R40H5522	NR	NR
	Fd	BX		7142 - D225	MD225	R40H5010	R40H5522	NR	NR
	Fd	BX		7142 - D225	MD225	R40H5010	R40H5522	NR	NR
	Fd	BX		7142 - D225	MD225	R40H5010	R40H5522	NR	NR
	Fd	BX		7142 - D225	MD225	R40H5010	R40H5522	NR	NR
	Fd	BX		7142 - D225	MD225	R40H5010	R40H5522	NR	NR
	Fd	BX		7142 - D225	MD225	R40H5010	R40H5522	NR	NR
	Fd	BX		7142 - D225	MD225	R40H5010	R40H5522	NR	NR
	Fd	BX		7142 - D225	MD225	R40H5010	R40H5522	NR	NR
	Fd	BX		7142 - D225	MD225	R40H5010	R40H5522	NR	NR
	Fd	BX		7142 - D225	MD225	R40H5010	R40H5522	NR	NR
	Fd	BX		7142 - D225	MD225	R40H5010	R40H5522	NR	NR
	Fd	BX		7142 - D225	MD225	R40H5010	R40H5522	NR	NR
	Fd	BX		7142 - D225	MD225	R40H5010	R40H5522	NR	NR
	Fd	BX		7142 - D225	MD225	R40H5010	R40H5522	NR	NR
	Fd	BX		7142 - D225	MD225	R40H5010	R40H5522	NR	NR
	Fd	BX		7142 - D225	MD225	R40H5010	R40H5522	NR	NR
	Fd	BX		7142 - D225	MD225	R40H5010	R40H5522	NR	NR
	Fd	BX		7142 - D225	MD225	R40H5010	R40H5522	NR	NR
	Fd	BX		7142 - D225	MD225	R40H5010	R40H5522	NR	NR
Code: 04238	Fd	BX		7142 - D225	MD225	R40H5010	R40H5522	NR	NR

37 - Also available as a New unit

38 - First design, may have external joining tube and uses steel pistons

39 - First design, uses steel pistons.

40 - For chrome plated steel version, use R4090070P

53 - Power Brakes

72 - Phenolic/Steel Face

201 - Steel Piston

266 - 10 Stud, Hat Shaped

267 - 10 Stud, U Shaped

MERITOR DRUM OR ROTOR NO.	CALIPER OR CYLINDER BORE SIZE	MERITOR CALIPER OR WHEEL CYLINDER (LEFT)	MERITOR CALIPER OR WHEEL CYLINDER (RIGHT)	MERITOR CALIPER OR WHEEL CYLINDER REPAIR KIT	MERITOR CALIPER PISTON	MERITOR MASTER CYLINDER	MERITOR MASTER CYLINDER KIT	MERITOR BRAKE HOSE (LEFT)	MERITOR BRAKE HOSE (RIGHT)
									ITE(Cont.)
180, 1800, 1810, 1823, 1824, 1850, 1853, 1854 SERIES CONVENTIONAL TRUCK, SCHOOL BUS, TILT CAB(Cont.)									
R44141858[275]	2-19/32 "	R42R55245	R42R55245[38]	R402235118	R402238231[201]	-	-	-	-
23-123552-004[266]	3-3/8 "	R42R55099	R42R55098[37]	R4066780	R4090021[201]	-	-	-	-
23-122920-002[273]	3-3/8 "	R42R55099	R42R55098[37]	R4066780	R4090021[201]	-	-	-	-
R44141858[275]	2-19/32 "	R42R55245	R42R55245[38]	R402235118	R402238231[201]	R4111885[53]	N/A	-	-
R44141476[268]	3-3/8 "	R42R55099	R42R55098[37]	R4066780	R4090021[201]	-	-	-	-
R44141476[268]	3-3/8 "	R42R55099	R42R55098[37]	R4066780	R4090021[201]	-	-	-	-
23-122920-002[273]	2-19/32 "	R42R55245	R42R55245[38]	R402235118	R402238231[201]	-	-	-	-
R44141858[275]	2-19/32 "	R42R55245	R42R55245[38]	R402235118	R402238231[201]	-	-	N/A	N/A
R44141858[275]	3-3/8 "	R42R55099	R42R55098[37]	R4066780	R4090021[201]	-	-	-	-
23-122920-002[273]	3-3/8 "	R42R55099	R42R55098[37]	R4066780	R4090021[201]	-	-	-	-
R44141858[275]	3-3/8 "	R42R55099	R42R55098[37]	R4066780	R4090021[201]	-	-	-	-
23-123572-004[271]	3-3/8 "	R42R55099	R42R55098[37]	R4066780	R4090021[201]	-	-	-	-
23-122920-002[273]	3-3/8 "	R42R55099	R42R55098[37]	R4066780	R4090021[201]	-	-	-	-
23-122527-002[272]	3-3/8 "	R42R55099	R42R55098[37]	R4066780	R4090021[201]	-	-	-	-
23-123552-004[266]	2-19/32 "	R42R55245	R42R55245[38]	R402235118	R402238231[201]	-	-	-	-
R44141858[275]	2-19/32 "	R42R55245	R42R55245[38]	R402235118	R402238231[201]	N/A[53]	-	-	-
R44141858[275]	3-3/8 "	R42R55099	R42R55098[37]	R4066780	R4090021[201]	-	-	-	-
R44141476[268]	3-3/8 "	R42R55099	R42R55098[37]	R4066780	R4090021[201]	-	-	-	-
23-122527-002[272]	3-3/8 "	R42R55099	R42R55098[37]	R4066780	R4090021[201]	-	-	-	-
23-123572-004[271]	3-3/8 "	R42R55099	R42R55098[37]	R4066780	R4090021[201]	-	-	-	-
R44141858[275]	2-19/32 "	R42R55245	R42R55245[38]	R402235118	R402238231[201]	-	-	N/A	N/A
R44141476[268]	3-3/8 "	R42R55099	R42R55098[37]	R4066780	R4090021[201]	-	-	-	-
23-123552-004[266]	2-7/8 "	R429218X	R429218X[39]	R406532	R4090070[40]	-	-	-	-
23-123552-004[266]	3-3/8 "	R42R55099	R42R55098[37]	R4066780	R4090021[201]	-	-	-	-
23-122920-002[273]	3-3/8 "	R42R55099	R42R55098[37]	R4066780	R4090021[201]	-	-	-	-
23-123552-004[266]	3-3/8 "	R42R55099	R42R55098[37]	R4066780	R4090021[201]	-	-	-	-
23-122527-002[272]	2-19/32 "	R42R55245	R42R55245[38]	R40107771	R4090100P[201]	-	-	-	-
R44141628[269]	2-19/32 "	R42R55245	R42R55245[38]	R402235118	R402238231[201]	-	-	-	-
23-123552-004[266]	2-19/32 "	R42R55245	R42R55245[38]	R402235118	R402238231[201]	-	-	-	-
23-122527-002[272]	2-19/32 "	R42R55245	R42R55245[38]	R402235118	R402238231[201]	-	-	-	-
R44141629[269]	2-19/32 "	R42R55245	R42R55245[38]	R402235118	R402238231[201]	-	-	-	-
23-122527-002[272]	2-19/32 "	R42R55245	R42R55245[38]	R40107771	R4090100P[201]	-	-	-	-
23-122527-002[272]	2-19/32 "	R42R55245	R42R55245[38]	R40107771	R4090100P[201]	-	-	-	-
R44141608[267]	2-19/32 "	R42R55245	R42R55245[38]	R402235118	R402238231[201]	-	-	-	-
23-123572-004[271]	2-19/32 "	R42R55245	R42R55245[38]	R402235118	R402238231[201]	-	-	-	-
R44141627[270]	2-19/32 "	R42R55245	R42R55245[38]	R402235118	R402238231[201]	-	-	-	-
23-122527-002[272]	2-19/32 "	R42R55245	R42R55245[38]	R40107771	R4090100P[201]	-	-	-	-
23-122527-002[272]	2-19/32 "	R42R55245	R42R55245[38]	R40107771	R4090100P[201]	-	-	-	-
23-122527-002[272]	2-19/32 "	R42R55245	R42R55245[38]	R40107771	R4090100P[201]	-	-	-	-
23-122920-002[273]	2-7/8 "	R42R55250	R42R55250[37]	R4066365	R4090096[72]	-	-	-	-
23-122527-002[272]	2-7/8 "	R42R55250	R42R55250[37]	R4066365	R4090096[72]	-	-	-	-
R44141858[275]	2-7/8 "	R42R55250	R42R55250[37]	R4066365	R4090096[72]	-	-	-	-
R44141858[275]	2-7/8 "	R42R55250	R42R55250[37]	R4066365	R4090096[72]	-	-	-	-
R44141858[275]	2-7/8 "	R429218X	R429218X[39]	R406532	R4090070[40]	-	-	-	-
23-122920-002[273]	2-7/8 "	R42R55250	R42R55250[37]	R4066365	R4090096[72]	-	-	-	-
23-123552-004[266]	2-7/8 "	R42R55250	R42R55250[37]	R4066365	R4090096[72]	-	-	-	-
23-122527-002[272]	2-7/8 "	R42R55250	R42R55250[37]	R4066365	R4090096[72]	-	-	-	-
R44141476[268]	2-7/8 "	R42R55250	R42R55250[37]	R4066365	R4090096[72]	-	-	-	-
R44141858[275]	2-7/8 "	R42R55250	R42R55250[37]	R4066365	R4090096[72]	-	-	-	-
R44141476[268]	2-7/8 "	R429218X	R429218X[39]	R406532	R4090070[40]	-	-	-	-
23-123572-004[271]	2-7/8 "	R42R55250	R42R55250[37]	R4066365	R4090096[72]	-	-	-	-
23-123552-004[266]	2-7/8 "	R42R55250	R42R55250[37]	R4066365	R4090096[72]	-	-	-	-
23-123552-004[266]	2-7/8 "	R42R55250	R42R55250[37]	R4066365	R4090096[72]	-	-	-	-
23-122527-002[272]	2-7/8 "	R429218X	R429218X[39]	R406532	R4090070[40]	-	-	-	-
23-122527-002[272]	2-7/8 "	R42R55250	R42R55250[37]	R4066365	R4090096[72]	-	-	-	-
23-123572-004[271]	2-7/8 "	R429218X	R429218X[39]	R406532	R4090070[40]	-	-	-	-
R44141476[268]	2-7/8 "	R42R55250	R42R55250[37]	R4066365	R4090096[72]	-	-	-	-
23-123572-004[271]	2-7/8 "	R42R55250	R42R55250[37]	R4066365	R4090096[72]	-	-	-	-
23-122920-002[273]	2-7/8 "	R429218X	R429218X[39]	R406532	R4090070[40]	-	-	-	-
23-122920-002[273]	2-7/8 "	R42R55250	R42R55250[37]	R4066365	R4090096[72]	-	-	-	-
23-123572-004[271]	2-7/8 "	R42R55250	R42R55250[37]	R4066365	R4090096[72]	-	-	-	-
R44141476[268]	2-7/8 "	R42R55250	R42R55250[37]	R4066365	R4090096[72]	-	-	-	-
R44141608[267]	2-7/8 "	R42R55250	R42R55250[37]	R4066365	R4090096[72]	-	-	-	-

268 - 5 Stud, Hat Shape

269 - 5 Stud, U Shape

270 - 5 Stud, U Shape, .766 Dia. Studs

271 - 6 Stud, Hat Shape

272 - 6 Stud, U Shape

273 - 5 Stud, U Shape, .780 Dia. Studs

275 - 5 Stud, U Shape, .656 Dia. Studs

MAKE MODEL YEAR AXLE CODE AXLE WEIGHT	AXLE & BRK. TYPE	BRK. MFG.	BRAKE SIZE	FMSI	MERITOR DISC PAD OR BRAKE SHOE	MERITOR GUIDE PIN OR RETURN SPRING KIT	MERITOR CALIPER HWD. KIT OR RETURN SPRING KIT	MERITOR ADJUSTER KIT (LEFT WHEEL)	MERITOR ADJUSTER KIT (RIGHT WHEEL)
ITE(Cont.)									
180, 1800, 1810, 1823, 1824, 1850, 1853, 1854 SERIES CONVENTIONAL TRUCK, SCHOOL BUS, TILT CAB(Cont.)									
1986									
	Fd	BX		7142 - D225	MD225	R40H5010	R40H5522	NR	NR
	Fd	BX		7142 - D225	MD225	R40H5010	R40H5522	NR	NR
	Fd	BX		7142 - D225	MD225	R40H5010	R40H5522	NR	NR
	Fd	BX		7142 - D225	MD225	R40H5010	R40H5522	NR	NR
	Fd	BX		7142 - D225	MD225	R40H5010	R40H5522	NR	NR
	Fd	BX		7142 - D225	MD225	R40H5010	R40H5522	NR	NR
	Fd	BX		7142 - D225	MD225	R40H5010	R40H5522	NR	NR
	Fd	BX		7142 - D225	MD225	R40H5010	R40H5522	NR	NR
	Fd	BX		7142 - D225	MD225	R40H5010	R40H5522	NR	NR
	Fd	BX		7142 - D225	MD225	R40H5010	R40H5522	NR	NR
	Fd	BX		7142 - D225	MD225	R40H5010	R40H5522	NR	NR
	Fd	BX		7142 - D225	MD225	R40H5010	R40H5522	NR	NR
	Fd	BX		7142 - D225	MD225	R40H5010	R40H5522	NR	NR
	Fd	BX		7142 - D225	MD225	R40H5010	R40H5522	NR	NR
	Fd	BX		7142 - D225	MD225	R40H5010	R40H5522	NR	NR
	Fd	BX		7142 - D225	MD225	R40H5010	R40H5522	NR	NR
1985									
	Fd	BX		7108 - D184	MD184	R40H5010	R40H5519	NR	NR
	Fd	BX		7108 - D184	MD184	R40H5010	R40H5519	NR	NR
	Fd	BX		7108 - D184	MD184	R40H5010	R40H5519	NR	NR
	Fd	BX		7108 - D184	MD184	R40H5010	R40H5519	NR	NR
	Fd	BX		7108 - D184	MD184	R40H5010	R40H5519	NR	NR
	Fd	BX		7108 - D184	MD184	R40H5010	R40H5519	NR	NR
	Fd	BX		7108 - D184	MD184	R40H5010	R40H5519	NR	NR
	Fd	BX		7108 - D184	MD184	R40H5010	R40H5519	NR	NR
	Fd	BX		7108 - D184	MD184	R40H5010	R40H5519	NR	NR
	Fd	BX		7108 - D184	MD184	R40H5010	R40H5519	NR	NR
	Fd	BX		7108 - D184	MD184	R40H5010	R40H5519	NR	NR
	Fd	BX		7108 - D184	MD184	R40H5010	R40H5519	NR	NR
	Fd	BX		7108 - D184	MD184	R40H5010	R40H5519	NR	NR
	Fd	BX		7108 - D184	MD184	R40H5010	R40H5519	NR	NR
	Fd	BX		7108 - D184	MD184	R40H5010	R40H5519	NR	NR
	Fd	BX		7108 - D184	MD184	R40H5010	R40H5519	NR	NR
	Fd	BX		7108 - D184	MD184	R40H5010	R40H5519	NR	NR
	Fd	BX		7108 - D184	MD184	R40H5010	R40H5519	NR	NR
	Fd	BX		7108 - D184	MD184	R40H5010	R40H5519	NR	NR
	Fd	BX		7108 - D184	MD184	R40H5010	R40H5519	NR	NR
	Fd	BX		7108 - D184	MD184	R40H5010	R40H5519	NR	NR
	Fd	BX		7108 - D184	MD184	R40H5010	R40H5519	NR	NR
	Fd	BX		7108 - D184	MD184	R40H5010	R40H5519	NR	NR
	Fd	BX		7108 - D184	MD184	R40H5010	R40H5519	NR	NR
	Fd	BX		7108 - D184	MD184	R40H5010	R40H5519	NR	NR
	Fd	BX		7108 - D184	MD184	R40H5010	R40H5519	NR	NR
	Fd	BX		7108 - D184	MD184	R40H5010	R40H5519	NR	NR
	Fd	BX		7108 - D184	MD184	R40H5010	R40H5519	NR	NR
	Fd	BX		7108 - D184	MD184	R40H5010	R40H5519	NR	NR
	Fd	BX		7142 - D225	MD225	R40H5010	R40H5522	NR	NR
	Fd	BX		7108 - D184	MD184	R40H5010	R40H5519	NR	NR
	Fd	BX		7108 - D184	MD184	R40H5010	R40H5519	NR	NR
	Fd	BX		7108 - D184	MD184	R40H5010	R40H5519	NR	NR
	Fd	BX		7108 - D184	MD184	R40H5010	R40H5519	NR	NR
	Fd	BX		7108 - D184	MD184	R40H5010	R40H5519	NR	NR
	Fd	BX		7108 - D184	MD184	R40H5010	R40H5519	NR	NR
	Fd	BX		7108 - D184	MD184	R40H5010	R40H5519	NR	NR
	Fd	BX		7108 - D184	MD184	R40H5010	R40H5519	NR	NR
	Rd	BX		7108 - D184	MD184	R40H5010	R40H5519	NR	NR
	Rd	BX		7108 - D184	MD184	R40H5010	R40H5519	NR	NR
	Rd	BX		7108 - D184	MD184	R40H5010	R40H5519	NR	NR
	Rd	BX		7108 - D184	MD184	R40H5010	R40H5519	NR	NR
	Rd	BX		7108 - D184	MD184	R40H5010	R40H5519	NR	NR
	Rd	BX		7108 - D184	MD184	R40H5010	R40H5519	NR	NR
	Rd	BX		7108 - D184	MD184	R40H5010	R40H5519	NR	NR
	Rd	BX		7108 - D184	MD184	R40H5010	R40H5519	NR	NR
	Rd	BX		7108 - D184	MD184	R40H5010	R40H5519	NR	NR
	Rd	BX		7108 - D184	MD184	R40H5010	R40H5519	NR	NR
	Rd	BX		7108 - D184	MD184	R40H5010	R40H5519	NR	NR

37 - Also available as a New unit

38 - First design, may have external joining tube and uses steel pistons

39 - First design, uses steel pistons.

40 - For chrome plated steel version, use R4090070P

53 - Power Brakes

72 - Phenolic/Steel Face

201 - Steel Piston

266 - 10 Stud, Hat Shaped

267 - 10 Stud, U Shaped

MERITOR DRUM OR ROTOR NO.	CALIPER OR CYLINDER BORE SIZE	MERITOR CALIPER OR WHEEL CYLINDER (LEFT)	MERITOR CALIPER OR WHEEL CYLINDER (RIGHT)	MERITOR CALIPER OR WHEEL CYLINDER REPAIR KIT	MERITOR CALIPER PISTON	MERITOR MASTER CYLINDER	MERITOR MASTER CYLINDER KIT	MERITOR BRAKE HOSE (LEFT)	MERITOR BRAKE HOSE (RIGHT)
									ITE(Cont.)
180, 1800, 1810, 1823, 1824, 1850, 1853, 1854 SERIES CONVENTIONAL TRUCK, SCHOOL BUS, TILT CAB(Cont.)									
23-123552-004[266]	2-7/8 "	R42R55250	R42R55250[37]	R4066365	R4090096[72]	-	-	-	-
R44141608[267]	2-7/8 "	R42R55250	R42R55250[37]	R4066365	R4090096[72]	-	-	-	-
R44141629[269]	2-7/8 "	R42R55250	R42R55250[37]	R4066365	R4090096[72]	-	-	-	-
R44141627[270]	2-7/8 "	R42R55250	R42R55250[37]	R4066365	R4090096[72]	-	-	-	-
R44141628[269]	2-7/8 "	R42R55250	R42R55250[37]	R4066365	R4090096[72]	-	-	-	-
23-123552-004[266]	2-7/8 "	R42R55250	R42R55250[37]	R4066365	R4090096[72]	-	-	-	-
R44141629[269]	2-7/8 "	R42R55250	R42R55250[37]	R4066365	R4090096[72]	-	-	-	-
R44141628[269]	2-7/8 "	R42R55250	R42R55250[37]	R4066365	R4090096[72]	-	-	-	-
R44141628[269]	2-7/8 "	R42R55250	R42R55250[37]	R4066365	R4090096[72]	-	-	-	-
R44141608[267]	2-7/8 "	R42R55250	R42R55250[37]	R4066365	R4090096[72]	-	-	-	-
23-123572-004[271]	2-7/8 "	R42R55250	R42R55250[37]	R4066365	R4090096[72]	-	-	-	-
23-123572-004[271]	2-7/8 "	R42R55250	R42R55250[37]	R4066365	R4090096[72]	-	-	-	-
R44141627[270]	2-7/8 "	R42R55250	R42R55250[37]	R4066365	R4090096[72]	-	-	-	-
23-123552-004[266]	2-7/8 "	R42R55250	R42R55250[37]	R4066365	R4090096[72]	-	-	-	-
R44141627[270]	2-7/8 "	R42R55250	R42R55250[37]	R4066365	R4090096[72]	-	-	-	-
23-123572-004[271]	2-7/8 "	R42R55250	R42R55250[37]	R4066365	R4090096[72]	-	-	-	-
R44141858[275]	3-3/8 "	R42R55099	R42R55098[37]	R4066780	R4090021[201]	-	-	-	-
23-122920-002[273]	3-3/8 "	R42R55099	R42R55098[37]	R4066780	R4090021[201]	-	-	-	-
R44141858[275]	2-19/32 "	R42R55245	R42R55245[38]	R402235118	R402238231[201]	-	-	N/A	N/A
R44141858[275]	3-3/8 "	R42R55099	R42R55098[37]	R4066780	R4090021[201]	-	-	-	-
R44141476[268]	3-3/8 "	R42R55099	R42R55098[37]	R4066780	R4090021[201]	-	-	-	-
23-123552-004[266]	3-3/8 "	R42R55099	R42R55098[37]	R4066780	R4090021[201]	-	-	-	-
23-123552-004[266]	3-3/8 "	R42R55099	R42R55098[37]	R4066780	R4090021[201]	-	-	-	-
R44141476[268]	2-19/32 "	R42R55245	R42R55245[38]	R402235118	R402238231[201]	-	-	-	-
23-123552-004[266]	2-19/32 "	R42R55245	R42R55245[38]	R402235118	R402238231[201]	-	-	-	-
R44141858[275]	2-19/32 "	R42R55245	R42R55245[38]	R402235118	R402238231[201]	R4111885[53]	N/A	-	-
23-123572-004[271]	2-19/32 "	R42R55245	R42R55245[38]	R402235118	R402238231[201]	-	-	-	-
23-122920-002[273]	3-3/8 "	R42R55099	R42R55098[37]	R4066780	R4090021[201]	-	-	-	-
R44141858[275]	2-19/32 "	R42R55245	R42R55245[38]	R402235118	R402238231[201]	N/A[53]	-	-	-
R44141858[275]	3-3/8 "	R42R55099	R42R55098[37]	R4066780	R4090021[201]	-	-	-	-
23-123572-004[271]	3-3/8 "	R42R55099	R42R55098[37]	R4066780	R4090021[201]	-	-	-	-
R44141476[268]	3-3/8 "	R42R55099	R42R55098[37]	R4066780	R4090021[201]	-	-	-	-
23-122527-002[272]	2-19/32 "	R42R55245	R42R55245[38]	R402235118	R402238231[201]	-	-	-	-
23-123552-004[266]	3-3/8 "	R42R55099	R42R55098[37]	R4066780	R4090021[201]	-	-	-	-
R44141476[268]	3-3/8 "	R42R55099	R42R55098[37]	R4066780	R4090021[201]	-	-	-	-
23-123572-004[271]	3-3/8 "	R42R55099	R42R55098[37]	R4066780	R4090021[201]	-	-	-	-
23-122527-002[272]	3-3/8 "	R42R55099	R42R55098[37]	R4066780	R4090021[201]	-	-	-	-
23-123572-004[271]	3-3/8 "	R42R55099	R42R55098[37]	R4066780	R4090021[201]	-	-	-	-
23-122920-002[273]	2-19/32 "	R42R55245	R42R55245[38]	R402235118	R402238231[201]	-	-	-	-
23-122920-002[273]	3-3/8 "	R42R55099	R42R55098[37]	R4066780	R4090021[201]	-	-	-	-
23-122527-002[272]	3-3/8 "	R42R55099	R42R55098[37]	R4066780	R4090021[201]	-	-	-	-
R44141858[275]	3-3/8 "	R42R55099	R42R55098[37]	R4066780	R4090021[201]	-	-	-	-
23-123552-004[266]	2-7/8 "	R429218X	R429218X[39]	R406532	R4090070[40]	-	-	-	-
R44141858[275]	2-19/32 "	R42R55245	R42R55245[38]	R402235118	R402238231[201]	-	-	R4577503	R4577503
23-123552-004[266]	3-3/8 "	R42R55099	R42R55098[37]	R4066780	R4090021[201]	-	-	-	-
R44141858[275]	2-19/32 "	R42R55245	R42R55245[38]	R402235118	R402238231[201]	-	-	R458632	R458632
23-122920-002[273]	3-3/8 "	R42R55099	R42R55098[37]	R4066780	R4090021[201]	-	-	-	-
R44141858[275]	2-19/32 "	R42R55245	R42R55245[38]	R402235118	R402238231[201]	-	-	-	-
R44141858[275]	2-19/32 "	R42R55245	R42R55245[38]	R402235118	R402238231[201]	N/A[53]	-	-	-
23-122527-002[272]	3-3/8 "	R42R55099	R42R55098[37]	R4066780	R4090021[201]	-	-	-	-
R44141476[268]	3-3/8 "	R42R55099	R42R55098[37]	R4066780	R4090021[201]	-	-	-	-
23-122527-002[272]	2-19/32 "	R42R55245	R42R55245[38]	R40107771	R4090100P[201]	-	-	-	-
R44141608[267]	2-19/32 "	R42R55245	R42R55245[38]	R402235118	R402238231[201]	-	-	-	-
R44141627[270]	2-19/32 "	R42R55245	R42R55245[38]	R402235118	R402238231[201]	-	-	-	-
23-122527-002[272]	2-19/32 "	R42R55245	R42R55245[38]	R40107771	R4090100P[201]	-	-	-	-
23-122527-002[272]	2-19/32 "	R42R55245	R42R55245[38]	R40107771	R4090100P[201]	-	-	-	-
23-122527-002[272]	2-19/32 "	R42R55245	R42R55245[38]	R40107771	R4090100P[201]	-	-	-	-
23-122527-002[272]	2-19/32 "	R42R55245	R42R55245[38]	R40107771	R4090100P[201]	-	-	-	-
23-123552-004[266]	2-19/32 "	R42R55245	R42R55245[38]	R402235118	R402238231[201]	-	-	-	-
23-123572-004[271]	2-19/32 "	R42R55245	R42R55245[38]	R402235118	R402238231[201]	-	-	-	-
23-122527-002[272]	2-19/32 "	R42R55245	R42R55245[38]	R402235118	R402238231[201]	-	-	-	-
23-122527-002[272]	2-19/32 "	R42R55245	R42R55245[38]	R40107771	R4090100P[201]	-	-	-	-

268 - 5 Stud, Hat Shape

269 - 5 Stud, U Shape

270 - 5 Stud, U Shape, .766 Dia. Studs

271 - 6 Stud, Hat Shape

272 - 6 Stud, U Shape

273 - 5 Stud, U Shape, .780 Dia. Studs

275 - 5 Stud, U Shape, .656 Dia. Studs

MAKE MODEL YEAR AXLE CODE AXLE WEIGHT	AXLE & BRK. TYPE	BRK. MFG.	BRAKE SIZE	FMSI	MERITOR DISC PAD OR BRAKE SHOE	MERITOR GUIDE PIN OR RETURN SPRING KIT	MERITOR CALIPER HWD. KIT OR RETURN SPRING KIT	MERITOR ADJUSTER KIT (LEFT WHEEL)	MERITOR ADJUSTER KIT (RIGHT WHEEL)
ITE(Cont.)									
180, 1800, 1810, 1823, 1824, 1850, 1853, 1854 SERIES CONVENTIONAL TRUCK, SCHOOL BUS, TILT CAB(Cont.)									
1985									
	Rd	BX		7108 - D184	MD184	R40H5010	R40H5519	NR	NR
	Rd	BX		7108 - D184	MD184	R40H5010	R40H5519	NR	NR
Code: 04146	Fd	BX		7142 - D225	MD225	R40H5010	R40H5522	NR	NR
	Fd	BX		7142 - D225	MD225	R40H5010	R40H5522	NR	NR
	Fd	BX		7142 - D225	MD225	R40H5010	R40H5522	NR	NR
	Fd	BX		7142 - D225	MD225	R40H5010	R40H5522	NR	NR
	Fd	BX		7142 - D225	MD225	R40H5010	R40H5522	NR	NR
	Fd	BX		7142 - D225	MD225	R40H5010	R40H5522	NR	NR
	Fd	BX		7142 - D225	MD225	R40H5010	R40H5522	NR	NR
	Fd	BX		7142 - D225	MD225	R40H5010	R40H5522	NR	NR
	Fd	BX		7142 - D225	MD225	R40H5010	R40H5522	NR	NR
	Fd	BX		7142 - D225	MD225	R40H5010	R40H5522	NR	NR
	Fd	BX		7142 - D225	MD225	R40H5010	R40H5522	NR	NR
	Fd	BX		7142 - D225	MD225	R40H5010	R40H5522	NR	NR
	Fd	BX		7142 - D225	MD225	R40H5010	R40H5522	NR	NR
	Fd	BX		7142 - D225	MD225	R40H5010	R40H5522	NR	NR
	Fd	BX		7142 - D225	MD225	R40H5010	R40H5522	NR	NR
	Fd	BX		7142 - D225	MD225	R40H5010	R40H5522	NR	NR
	Fd	BX		7142 - D225	MD225	R40H5010	R40H5522	NR	NR
	Fd	BX		7142 - D225	MD225	R40H5010	R40H5522	NR	NR
	Fd	BX		7142 - D225	MD225	R40H5010	R40H5522	NR	NR
	Fd	BX		7142 - D225	MD225	R40H5010	R40H5522	NR	NR
	Fd	BX		7142 - D225	MD225	R40H5010	R40H5522	NR	NR
	Fd	BX		7142 - D225	MD225	R40H5010	R40H5522	NR	NR
	Fd	BX		7142 - D225	MD225	R40H5010	R40H5522	NR	NR
Code: 04238	Fd	BX		7142 - D225	MD225	R40H5010	R40H5522	NR	NR
	Fd	BX		7142 - D225	MD225	R40H5010	R40H5522	NR	NR
	Fd	BX		7142 - D225	MD225	R40H5010	R40H5522	NR	NR
	Fd	BX		7142 - D225	MD225	R40H5010	R40H5522	NR	NR
	Fd	BX		7142 - D225	MD225	R40H5010	R40H5522	NR	NR
	Fd	BX		7142 - D225	MD225	R40H5010	R40H5522	NR	NR
	Fd	BX		7142 - D225	MD225	R40H5010	R40H5522	NR	NR
	Fd	BX		7142 - D225	MD225	R40H5010	R40H5522	NR	NR
	Fd	BX		7142 - D225	MD225	R40H5010	R40H5522	NR	NR
	Fd	BX		7142 - D225	MD225	R40H5010	R40H5522	NR	NR
	Fd	BX		7142 - D225	MD225	R40H5010	R40H5522	NR	NR
	Fd	BX		7142 - D225	MD225	R40H5010	R40H5522	NR	NR
	Fd	BX		7142 - D225	MD225	R40H5010	R40H5522	NR	NR
	Fd	BX		7142 - D225	MD225	R40H5010	R40H5522	NR	NR
	Fd	BX		7142 - D225	MD225	R40H5010	R40H5522	NR	NR
	Fd	BX		7142 - D225	MD225	R40H5010	R40H5522	NR	NR
	Fd	BX		7142 - D225	MD225	R40H5010	R40H5522	NR	NR
	Fd	BX		7142 - D225	MD225	R40H5010	R40H5522	NR	NR
	Fd	BX		7142 - D225	MD225	R40H5010	R40H5522	NR	NR
	Fd	BX		7142 - D225	MD225	R40H5010	R40H5522	NR	NR
1984									
	Fd	BX		7108 - D184	MD184	R40H5010	R40H5519	NR	NR
	Fd	BX		7108 - D184	MD184	R40H5010	R40H5519	NR	NR
	Fd	BX		7108 - D184	MD184	R40H5010	R40H5519	NR	NR
	Fd	BX		7108 - D184	MD184	R40H5010	R40H5519	NR	NR
	Fd	BX		7108 - D184	MD184	R40H5010	R40H5519	NR	NR
	Fd	BX		7108 - D184	MD184	R40H5010	R40H5519	NR	NR
	Fd	BX		7108 - D184	MD184	R40H5010	R40H5519	NR	NR
	Fd	BX		7108 - D184	MD184	R40H5010	R40H5519	NR	NR
	Fd	BX		7108 - D184	MD184	R40H5010	R40H5519	NR	NR
	Fd	BX		7108 - D184	MD184	R40H5010	R40H5519	NR	NR
	Fd	BX		7108 - D184	MD184	R40H5010	R40H5519	NR	NR
	Fd	BX		7108 - D184	MD184	R40H5010	R40H5519	NR	NR
	Fd	BX		7108 - D184	MD184	R40H5010	R40H5519	NR	NR
	Fd	BX		7108 - D184	MD184	R40H5010	R40H5519	NR	NR
	Fd	BX		7108 - D184	MD184	R40H5010	R40H5519	NR	NR
	Fd	BX		7108 - D184	MD184	R40H5010	R40H5519	NR	NR
	Fd	BX		7108 - D184	MD184	R40H5010	R40H5519	NR	NR
	Fd	BX		7108 - D184	MD184	R40H5010	R40H5519	NR	NR
	Fd	BX		7108 - D184	MD184	R40H5010	R40H5519	NR	NR
	Fd	BX		7142 - D225	MD225	R40H5010	R40H5522	NR	NR
	Fd	BX		7108 - D184	MD184	R40H5010	R40H5519	NR	NR
	Fd	BX		7108 - D184	MD184	R40H5010	R40H5519	NR	NR

37 - Also available as a New unit

38 - First design, may have external joining tube and uses steel pistons

39 - First design, uses steel pistons.

40 - For chrome plated steel version, use R4090070P

53 - Power Brakes

72 - Phenolic/Steel Face

201 - Steel Piston

266 - 10 Stud, Hat Shaped

267 - 10 Stud, U Shaped

MERITOR DRUM OR ROTOR NO.	CALIPER OR CYLINDER BORE SIZE	MERITOR CALIPER OR WHEEL CYLINDER (LEFT)	MERITOR CALIPER OR WHEEL CYLINDER (RIGHT)	MERITOR CALIPER OR WHEEL CYLINDER REPAIR KIT	MERITOR CALIPER PISTON	MERITOR MASTER CYLINDER	MERITOR MASTER CYLINDER KIT	MERITOR BRAKE HOSE (LEFT)	MERITOR BRAKE HOSE (RIGHT)
									ITE(Cont.)
180, 1800, 1810, 1823, 1824, 1850, 1853, 1854 SERIES CONVENTIONAL TRUCK, SCHOOL BUS, TILT CAB(Cont.)									
R44141629[269]	2-19/32 "	R42R55245	R42R55245[38]	R402235118	R402238231[201]	-	-	-	-
R44141628[269]	2-19/32 "	R42R55245	R42R55245[38]	R402235118	R402238231[201]	-	-	-	-
23-123572-004[271]	2-7/8 "	R429218X	R429218X[39]	R406532	R4090070[40]	-	-	-	-
R44141476[268]	2-7/8 "	R42R55250	R42R55250[37]	R4066365	R4090096[72]	-	-	-	-
23-123572-004[271]	2-7/8 "	R42R55250	R42R55250[37]	R4066365	R4090096[72]	-	-	-	-
R44141476[268]	2-7/8 "	R42R55250	R42R55250[37]	R4066365	R4090096[72]	-	-	-	-
R44141858[275]	2-7/8 "	R42R55250	R42R55250[37]	R4066365	R4090096[72]	-	-	-	-
23-122920-002[273]	2-7/8 "	R42R55250	R42R55250[37]	R4066365	R4090096[72]	-	-	-	-
23-122527-002[272]	2-7/8 "	R42R55250	R42R55250[37]	R4066365	R4090096[72]	-	-	-	-
R44141858[275]	2-7/8 "	R429218X	R429218X[39]	R406532	R4090070[40]	-	-	-	-
23-122920-002[273]	2-7/8 "	R429218X	R429218X[39]	R406532	R4090070[40]	-	-	-	-
23-122527-002[272]	2-7/8 "	R42R55250	R42R55250[37]	R4066365	R4090096[72]	-	-	-	-
23-123572-004[271]	2-7/8 "	R42R55250	R42R55250[37]	R4066365	R4090096[72]	-	-	-	-
R44141858[275]	2-7/8 "	R42R55250	R42R55250[37]	R4066365	R4090096[72]	-	-	-	-
23-123572-004[271]	2-7/8 "	R42R55250	R42R55250[37]	R4066365	R4090096[72]	-	-	-	-
23-122527-002[272]	2-7/8 "	R42R55250	R42R55250[37]	R4066365	R4090096[72]	-	-	-	-
23-122920-002[273]	2-7/8 "	R42R55250	R42R55250[37]	R4066365	R4090096[72]	-	-	-	-
23-123552-004[266]	2-7/8 "	R42R55250	R42R55250[37]	R4066365	R4090096[72]	-	-	-	-
R44141858[275]	2-7/8 "	R42R55250	R42R55250[37]	R4066365	R4090096[72]	-	-	-	-
R44141476[268]	2-7/8 "	R42R55250	R42R55250[37]	R4066365	R4090096[72]	-	-	-	-
R44141476[268]	2-7/8 "	R429218X	R429218X[39]	R406532	R4090070[40]	-	-	-	-
23-122527-002[272]	2-7/8 "	R429218X	R429218X[39]	R406532	R4090070[40]	-	-	-	-
23-123552-004[266]	2-7/8 "	R42R55250	R42R55250[37]	R4066365	R4090096[72]	-	-	-	-
23-122920-002[273]	2-7/8 "	R42R55250	R42R55250[37]	R4066365	R4090096[72]	-	-	-	-
23-123552-004[266]	2-7/8 "	R42R55250	R42R55250[37]	R4066365	R4090096[72]	-	-	-	-
23-123572-004[271]	2-7/8 "	R42R55250	R42R55250[37]	R4066365	R4090096[72]	-	-	-	-
R44141629[269]	2-7/8 "	R42R55250	R42R55250[37]	R4066365	R4090096[72]	-	-	-	-
R44141628[269]	2-7/8 "	R42R55250	R42R55250[37]	R4066365	R4090096[72]	-	-	-	-
R44141608[267]	2-7/8 "	R42R55250	R42R55250[37]	R4066365	R4090096[72]	-	-	-	-
R44141628[269]	2-7/8 "	R42R55250	R42R55250[37]	R4066365	R4090096[72]	-	-	-	-
R44141608[267]	2-7/8 "	R42R55250	R42R55250[37]	R4066365	R4090096[72]	-	-	-	-
R44141627[270]	2-7/8 "	R42R55250	R42R55250[37]	R4066365	R4090096[72]	-	-	-	-
23-123572-004[271]	2-7/8 "	R42R55250	R42R55250[37]	R4066365	R4090096[72]	-	-	-	-
R44141608[267]	2-7/8 "	R42R55250	R42R55250[37]	R4066365	R4090096[72]	-	-	-	-
23-123552-004[266]	2-7/8 "	R42R55250	R42R55250[37]	R4066365	R4090096[72]	-	-	-	-
23-123552-004[266]	2-7/8 "	R42R55250	R42R55250[37]	R4066365	R4090096[72]	-	-	-	-
R44141627[270]	2-7/8 "	R42R55250	R42R55250[37]	R4066365	R4090096[72]	-	-	-	-
R44141627[270]	2-7/8 "	R42R55250	R42R55250[37]	R4066365	R4090096[72]	-	-	-	-
23-123572-004[271]	2-7/8 "	R42R55250	R42R55250[37]	R4066365	R4090096[72]	-	-	-	-
R44141629[269]	2-7/8 "	R42R55250	R42R55250[37]	R4066365	R4090096[72]	-	-	-	-
23-123552-004[266]	2-7/8 "	R42R55250	R42R55250[37]	R4066365	R4090096[72]	-	-	-	-
R44141628[269]	2-7/8 "	R42R55250	R42R55250[37]	R4066365	R4090096[72]	-	-	-	-
23-123572-004[271]	3-3/8 "	R42R55099	R42R55098[37]	R4066780	R4090021[201]	-	-	-	-
23-123572-004[271]	3-3/8 "	R42R55099	R42R55098[37]	R4066780	R4090021[201]	-	-	-	-
23-122920-002[273]	2-19/32 "	R42R55245	R42R55245[38]	R402235118	R402238231[201]	-	-	-	-
23-123552-004[266]	2-19/32 "	R42R55245	R42R55245[38]	R402235118	R402238231[201]	-	-	-	-
R44141476[268]	3-3/8 "	R42R55099	R42R55098[37]	R4066780	R4090021[201]	-	-	-	-
R44141858[275]	3-3/8 "	R42R55099	R42R55098[37]	R4066780	R4090021[201]	-	-	-	-
R44141858[275]	2-19/32 "	R42R55245	R42R55245[38]	R402235118	R402238231[201]	-	-	N/A	N/A
23-122527-002[272]	3-3/8 "	R42R55099	R42R55098[37]	R4066780	R4090021[201]	-	-	-	-
R44141858[275]	2-19/32 "	R42R55245	R42R55245[38]	R402235118	R402238231[201]	N/A[53]	-	-	-
23-122920-002[273]	3-3/8 "	R42R55099	R42R55098[37]	R4066780	R4090021[201]	-	-	-	-
23-122527-002[272]	3-3/8 "	R42R55099	R42R55098[37]	R4066780	R4090021[201]	-	-	-	-
23-122920-002[273]	3-3/8 "	R42R55099	R42R55098[37]	R4066780	R4090021[201]	-	-	-	-
R44141858[275]	3-3/8 "	R42R55099	R42R55098[37]	R4066780	R4090021[201]	-	-	-	-
23-123552-004[266]	3-3/8 "	R42R55099	R42R55098[37]	R4066780	R4090021[201]	-	-	-	-
23-123552-004[266]	3-3/8 "	R42R55099	R42R55098[37]	R4066780	R4090021[201]	-	-	-	-
23-122920-002[273]	3-3/8 "	R42R55099	R42R55098[37]	R4066780	R4090021[201]	-	-	-	-
23-123572-004[271]	2-19/32 "	R42R55245	R42R55245[38]	R402235118	R402238231[201]	-	-	-	-
23-123552-004[266]	2-7/8 "	R429218X	R429218X[39]	R406532	R4090070[40]	-	-	-	-
23-123552-004[266]	3-3/8 "	R42R55099	R42R55098[37]	R4066780	R4090021[201]	-	-	-	-
R44141858[275]	2-19/32 "	R42R55245	R42R55245[38]	R402235118	R402238231[201]	R4111993[302]	R4122386	-	-

268 - 5 Stud, Hat Shape

269 - 5 Stud, U Shape

270 - 5 Stud, U Shape, .766 Dia. Studs

271 - 6 Stud, Hat Shape

272 - 6 Stud, U Shape

273 - 5 Stud, U Shape, .780 Dia. Studs

275 - 5 Stud, U Shape, .656 Dia. Studs

302 - Power Brakes, Dual System

MAKE MODEL YEAR AXLE CODE AXLE WEIGHT	AXLE & BRK. TYPE	BRK. MFG.	BRAKE SIZE	FMSI	MERITOR DISC PAD OR BRAKE SHOE	MERITOR GUIDE PIN OR RETURN SPRING KIT	MERITOR CALIPER HWD. KIT OR RETURN SPRING KIT	MERITOR ADJUSTER KIT (LEFT WHEEL)	MERITOR ADJUSTER KIT (RIGHT WHEEL)
ITE(Cont.)									
180, 1800, 1810, 1823, 1824, 1850, 1853, 1854 SERIES CONVENTIONAL TRUCK, SCHOOL BUS, TILT CAB(Cont.)									
1984									
	Fd	BX		7108 - D184	MD184	R40H5010	R40H5519	NR	NR
	Fd	BX		7108 - D184	MD184	R40H5010	R40H5519	NR	NR
	Fd	BX		7108 - D184	MD184	R40H5010	R40H5519	NR	NR
	Fd	BX		7108 - D184	MD184	R40H5010	R40H5519	NR	NR
	Fd	BX		7108 - D184	MD184	R40H5010	R40H5519	NR	NR
	Fd	BX		7108 - D184	MD184	R40H5010	R40H5519	NR	NR
	Fd	BX		7108 - D184	MD184	R40H5010	R40H5519	NR	NR
	Fd	BX		7108 - D184	MD184	R40H5010	R40H5519	NR	NR
	Fd	BX		7108 - D184	MD184	R40H5010	R40H5519	NR	NR
	Fd	BX		7108 - D184	MD184	R40H5010	R40H5519	NR	NR
	Fd	BX		7108 - D184	MD184	R40H5010	R40H5519	NR	NR
	Fd	BX		7108 - D184	MD184	R40H5010	R40H5519	NR	NR
	Fd	BX		7108 - D184	MD184	R40H5010	R40H5519	NR	NR
	Fd	BX		7108 - D184	MD184	R40H5010	R40H5519	NR	NR
	Fd	BX		7108 - D184	MD184	R40H5010	R40H5519	NR	NR
	Rd	BX		7108 - D184	MD184	R40H5010	R40H5519	NR	NR
	Rd	BX		7108 - D184	MD184	R40H5010	R40H5519	NR	NR
	Rd	BX		7108 - D184	MD184	R40H5010	R40H5519	NR	NR
	Rd	BX		7108 - D184	MD184	R40H5010	R40H5519	NR	NR
	Rd	BX		7108 - D184	MD184	R40H5010	R40H5519	NR	NR
	Rd	BX		7108 - D184	MD184	R40H5010	R40H5519	NR	NR
	Rd	BX		7108 - D184	MD184	R40H5010	R40H5519	NR	NR
	Rd	BX		7108 - D184	MD184	R40H5010	R40H5519	NR	NR
	Rd	BX		7108 - D184	MD184	R40H5010	R40H5519	NR	NR
	Rd	BX		7108 - D184	MD184	R40H5010	R40H5519	NR	NR
	Rd	BX		7108 - D184	MD184	R40H5010	R40H5519	NR	NR
	Rd	BX		7108 - D184	MD184	R40H5010	R40H5519	NR	NR
Code: 04146	Fd	BX		7142 - D225	MD225	R40H5010	R40H5522	NR	NR
	Fd	BX		7142 - D225	MD225	R40H5010	R40H5522	NR	NR
	Fd	BX		7142 - D225	MD225	R40H5010	R40H5522	NR	NR
	Fd	BX		7142 - D225	MD225	R40H5010	R40H5522	NR	NR
	Fd	BX		7142 - D225	MD225	R40H5010	R40H5522	NR	NR
	Fd	BX		7142 - D225	MD225	R40H5010	R40H5522	NR	NR
	Fd	BX		7142 - D225	MD225	R40H5010	R40H5522	NR	NR
	Fd	BX		7142 - D225	MD225	R40H5010	R40H5522	NR	NR
	Fd	BX		7142 - D225	MD225	R40H5010	R40H5522	NR	NR
	Fd	BX		7142 - D225	MD225	R40H5010	R40H5522	NR	NR
	Fd	BX		7142 - D225	MD225	R40H5010	R40H5522	NR	NR
	Fd	BX		7142 - D225	MD225	R40H5010	R40H5522	NR	NR
	Fd	BX		7142 - D225	MD225	R40H5010	R40H5522	NR	NR
	Fd	BX		7142 - D225	MD225	R40H5010	R40H5522	NR	NR
	Fd	BX		7142 - D225	MD225	R40H5010	R40H5522	NR	NR
	Fd	BX		7142 - D225	MD225	R40H5010	R40H5522	NR	NR
	Fd	BX		7142 - D225	MD225	R40H5010	R40H5522	NR	NR
	Fd	BX		7142 - D225	MD225	R40H5010	R40H5522	NR	NR
	Fd	BX		7142 - D225	MD225	R40H5010	R40H5522	NR	NR
	Fd	BX		7142 - D225	MD225	R40H5010	R40H5522	NR	NR
	Fd	BX		7142 - D225	MD225	R40H5010	R40H5522	NR	NR
	Fd	BX		7142 - D225	MD225	R40H5010	R40H5522	NR	NR
	Fd	BX		7142 - D225	MD225	R40H5010	R40H5522	NR	NR
	Fd	BX		7142 - D225	MD225	R40H5010	R40H5522	NR	NR
Code: 04238	Fd	BX		7142 - D225	MD225	R40H5010	R40H5522	NR	NR
	Fd	BX		7142 - D225	MD225	R40H5010	R40H5522	NR	NR
	Fd	BX		7142 - D225	MD225	R40H5010	R40H5522	NR	NR
	Fd	BX		7142 - D225	MD225	R40H5010	R40H5522	NR	NR
	Fd	BX		7142 - D225	MD225	R40H5010	R40H5522	NR	NR
	Fd	BX		7142 - D225	MD225	R40H5010	R40H5522	NR	NR
	Fd	BX		7142 - D225	MD225	R40H5010	R40H5522	NR	NR
	Fd	BX		7142 - D225	MD225	R40H5010	R40H5522	NR	NR
	Fd	BX		7142 - D225	MD225	R40H5010	R40H5522	NR	NR
	Fd	BX		7142 - D225	MD225	R40H5010	R40H5522	NR	NR
	Fd	BX		7142 - D225	MD225	R40H5010	R40H5522	NR	NR

37 - Also available as a New unit

38 - First design, may have external joining tube and uses steel pistons

39 - First design, uses steel pistons.

40 - For chrome plated steel version, use R4090070P

53 - Power Brakes

72 - Phenolic/Steel Face

201 - Steel Piston

266 - 10 Stud, Hat Shaped

267 - 10 Stud, U Shaped

MERITOR DRUM OR ROTOR NO.	CALIPER OR CYLINDER BORE SIZE	MERITOR CALIPER OR WHEEL CYLINDER (LEFT)	MERITOR CALIPER OR WHEEL CYLINDER (RIGHT)	MERITOR CALIPER OR WHEEL CYLINDER REPAIR KIT	MERITOR CALIPER PISTON	MERITOR MASTER CYLINDER	MERITOR MASTER CYLINDER KIT	MERITOR BRAKE HOSE (LEFT)	MERITOR BRAKE HOSE (RIGHT)
									ITE(Cont.)
180, 1800, 1810, 1823, 1824, 1850, 1853, 1854 SERIES CONVENTIONAL TRUCK, SCHOOL BUS, TILT CAB(Cont.)									
R44141858[275]	2-19/32 "	R42R55245	R42R55245[38]	R402235118	R402238231[201]	R4111885[53]	N/A	-	-
23-122527-002[272]	3-3/8 "	R42R55099	R42R55098[37]	R4066780	R4090021[201]	-	-	-	-
23-122920-002[273]	3-3/8 "	R42R55099	R42R55098[37]	R4066780	R4090021[201]	-	-	-	-
R44141858[275]	3-3/8 "	R42R55099	R42R55098[37]	R4066780	R4090021[201]	-	-	-	-
R44141476[268]	3-3/8 "	R42R55099	R42R55098[37]	R4066780	R4090021[201]	-	-	-	-
23-122527-002[272]	2-19/32 "	R42R55245	R42R55245[38]	R402235118	R402238231[201]	-	-	-	-
23-123552-004[266]	3-3/8 "	R42R55099	R42R55098[37]	R4066780	R4090021[201]	-	-	-	-
R44141858[275]	2-19/32 "	R42R55245	R42R55245[38]	R402235118	R402238231[201]	-	-	-	-
R44141858[275]	2-19/32 "	R42R55245	R42R55245[38]	R402235118	R402238231[201]	-	-	R4577503	R4577503
R44141476[268]	3-3/8 "	R42R55099	R42R55098[37]	R4066780	R4090021[201]	-	-	-	-
R44141858[275]	2-19/32 "	R42R55245	R42R55245[38]	R402235118	R402238231[201]	-	-	R458632	R458632
R44141476[268]	3-3/8 "	R42R55099	R42R55098[37]	R4066780	R4090021[201]	-	-	-	-
R44141858[275]	3-3/8 "	R42R55099	R42R55098[37]	R4066780	R4090021[201]	-	-	-	-
R44141858[275]	2-19/32 "	R42R55245	R42R55245[38]	R402235118	R402238231[201]	N/A[53]	-	-	-
R44141476[268]	2-19/32 "	R42R55245	R42R55245[38]	R402235118	R402238231[201]	-	-	-	-
23-123572-004[271]	3-3/8 "	R42R55099	R42R55098[37]	R4066780	R4090021[201]	-	-	-	-
R44141608[267]	2-19/32 "	R42R55245	R42R55245[38]	R402235118	R402238231[201]	-	-	-	-
23-122527-002[272]	2-19/32 "	R42R55245	R42R55245[38]	R40107771	R4090100P[201]	-	-	-	-
23-122527-002[272]	2-19/32 "	R42R55245	R42R55245[38]	R40107771	R4090100P[201]	-	-	-	-
23-122527-002[272]	2-19/32 "	R42R55245	R42R55245[38]	R40107771	R4090100P[201]	-	-	-	-
R44141627[270]	2-19/32 "	R42R55245	R42R55245[38]	R402235118	R402238231[201]	-	-	-	-
R44141629[269]	2-19/32 "	R42R55245	R42R55245[38]	R402235118	R402238231[201]	-	-	-	-
23-122527-002[272]	2-19/32 "	R42R55245	R42R55245[38]	R40107771	R4090100P[201]	-	-	-	-
23-123572-004[271]	2-19/32 "	R42R55245	R42R55245[38]	R402235118	R402238231[201]	-	-	-	-
23-123552-004[266]	2-19/32 "	R42R55245	R42R55245[38]	R402235118	R402238231[201]	-	-	-	-
23-122527-002[272]	2-19/32 "	R42R55245	R42R55245[38]	R402235118	R402238231[201]	-	-	-	-
23-122527-002[272]	2-19/32 "	R42R55245	R42R55245[38]	R40107771	R4090100P[201]	-	-	-	-
R44141628[269]	2-19/32 "	R42R55245	R42R55245[38]	R402235118	R402238231[201]	-	-	-	-
23-122527-002[272]	2-19/32 "	R42R55245	R42R55245[38]	R40107771	R4090100P[201]	-	-	-	-
23-123572-004[271]	2-7/8 "	R42R55250	R42R55250[37]	R4066365	R4090096[72]	-	-	-	-
23-123572-004[271]	2-7/8 "	R429218X	R429218X[39]	R406532	R4090070[40]	-	-	-	-
R44141476[268]	2-7/8 "	R42R55250	R42R55250[37]	R4066365	R4090096[72]	-	-	-	-
23-123552-004[266]	2-7/8 "	R42R55250	R42R55250[37]	R4066365	R4090096[72]	-	-	-	-
23-122920-002[273]	2-7/8 "	R42R55250	R42R55250[37]	R4066365	R4090096[72]	-	-	-	-
R44141476[268]	2-7/8 "	R42R55250	R42R55250[37]	R4066365	R4090096[72]	-	-	-	-
R44141858[275]	2-7/8 "	R42R55250	R42R55250[37]	R4066365	R4090096[72]	-	-	-	-
23-122920-002[273]	2-7/8 "	R429218X	R429218X[39]	R406532	R4090070[40]	-	-	-	-
R44141476[268]	2-7/8 "	R42R55250	R42R55250[37]	R4066365	R4090096[72]	-	-	-	-
23-123572-004[271]	2-7/8 "	R42R55250	R42R55250[37]	R4066365	R4090096[72]	-	-	-	-
23-122527-002[272]	2-7/8 "	R42R55250	R42R55250[37]	R4066365	R4090096[72]	-	-	-	-
23-122527-002[272]	2-7/8 "	R429218X	R429218X[39]	R406532	R4090070[40]	-	-	-	-
23-123552-004[266]	2-7/8 "	R42R55250	R42R55250[37]	R4066365	R4090096[72]	-	-	-	-
R44141476[268]	2-7/8 "	R429218X	R429218X[39]	R406532	R4090070[40]	-	-	-	-
R44141858[275]	2-7/8 "	R42R55250	R42R55250[37]	R4066365	R4090096[72]	-	-	-	-
R44141858[275]	2-7/8 "	R42R55250	R42R55250[37]	R4066365	R4090096[72]	-	-	-	-
23-123572-004[271]	2-7/8 "	R42R55250	R42R55250[37]	R4066365	R4090096[72]	-	-	-	-
23-123552-004[266]	2-7/8 "	R42R55250	R42R55250[37]	R4066365	R4090096[72]	-	-	-	-
23-122920-002[273]	2-7/8 "	R42R55250	R42R55250[37]	R4066365	R4090096[72]	-	-	-	-
23-122920-002[273]	2-7/8 "	R42R55250	R42R55250[37]	R4066365	R4090096[72]	-	-	-	-
23-122527-002[272]	2-7/8 "	R42R55250	R42R55250[37]	R4066365	R4090096[72]	-	-	-	-
23-122527-002[272]	2-7/8 "	R42R55250	R42R55250[37]	R4066365	R4090096[72]	-	-	-	-
R44141858[275]	2-7/8 "	R429218X	R429218X[39]	R406532	R4090070[40]	-	-	-	-
R44141628[269]	2-7/8 "	R42R55250	R42R55250[37]	R4066365	R4090096[72]	-	-	-	-
R44141608[267]	2-7/8 "	R42R55250	R42R55250[37]	R4066365	R4090096[72]	-	-	-	-
R44141608[267]	2-7/8 "	R42R55250	R42R55250[37]	R4066365	R4090096[72]	-	-	-	-
23-123572-004[271]	2-7/8 "	R42R55250	R42R55250[37]	R4066365	R4090096[72]	-	-	-	-
23-123572-004[271]	2-7/8 "	R42R55250	R42R55250[37]	R4066365	R4090096[72]	-	-	-	-
R44141628[269]	2-7/8 "	R42R55250	R42R55250[37]	R4066365	R4090096[72]	-	-	-	-
R44141627[270]	2-7/8 "	R42R55250	R42R55250[37]	R4066365	R4090096[72]	-	-	-	-
23-123572-004[271]	2-7/8 "	R42R55250	R42R55250[37]	R4066365	R4090096[72]	-	-	-	-
R44141628[269]	2-7/8 "	R42R55250	R42R55250[37]	R4066365	R4090096[72]	-	-	-	-
23-123552-004[266]	2-7/8 "	R42R55250	R42R55250[37]	R4066365	R4090096[72]	-	-	-	-
R44141629[269]	2-7/8 "	R42R55250	R42R55250[37]	R4066365	R4090096[72]	-	-	-	-

268 - 5 Stud, Hat Shape

269 - 5 Stud, U Shape

270 - 5 Stud, U Shape, .766 Dia. Studs

271 - 6 Stud, Hat Shape

272 - 6 Stud, U Shape

273 - 5 Stud, U Shape, .780 Dia. Studs

275 - 5 Stud, U Shape, .656 Dia. Studs

MAKE MODEL YEAR AXLE CODE AXLE WEIGHT	AXLE & BRK. TYPE	BRK. MFG.	BRAKE SIZE	FMSI	MERITOR DISC PAD OR BRAKE SHOE	MERITOR GUIDE PIN OR RETURN SPRING KIT	MERITOR CALIPER HWD. KIT OR RETURN SPRING KIT	MERITOR ADJUSTER KIT (LEFT WHEEL)	MERITOR ADJUSTER KIT (RIGHT WHEEL)
ITE(Cont.)									
180, 1800, 1810, 1823, 1824, 1850, 1853, 1854 SERIES CONVENTIONAL TRUCK, SCHOOL BUS, TILT CAB(Cont.)									
1984									
	Fd	BX		7142 - D225	MD225	R40H5010	R40H5522	NR	NR
	Fd	BX		7142 - D225	MD225	R40H5010	R40H5522	NR	NR
	Fd	BX		7142 - D225	MD225	R40H5010	R40H5522	NR	NR
	Fd	BX		7142 - D225	MD225	R40H5010	R40H5522	NR	NR
	Fd	BX		7142 - D225	MD225	R40H5010	R40H5522	NR	NR
	Fd	BX		7142 - D225	MD225	R40H5010	R40H5522	NR	NR
1983									
	Fd	BX		7108 - D184	MD184	R40H5010	R40H5519	NR	NR
	Fd	BX		7108 - D184	MD184	R40H5010	R40H5519	NR	NR
	Fd	BX		7108 - D184	MD184	R40H5010	R40H5519	NR	NR
	Fd	BX		7108 - D184	MD184	R40H5010	R40H5519	NR	NR
	Fd	BX		7108 - D184	MD184	R40H5010	R40H5519	NR	NR
	Fd	BX		7108 - D184	MD184	R40H5010	R40H5519	NR	NR
	Fd	BX		7108 - D184	MD184	R40H5010	R40H5519	NR	NR
	Fd	BX		7108 - D184	MD184	R40H5010	R40H5519	NR	NR
	Fd	BX		7108 - D184	MD184	R40H5010	R40H5519	NR	NR
	Fd	BX		7108 - D184	MD184	R40H5010	R40H5519	NR	NR
	Fd	BX		7108 - D184	MD184	R40H5010	R40H5519	NR	NR
	Rd	BX		7108 - D184	MD184	R40H5010	R40H5519	NR	NR
RA39, 199	Ra	WG	15 " x 7 "	4597 - 383	R700383	R40H597	R40H9200	R40H3540	R40H3541
FA118, 127, 139	Fa	WG	15 " x 5 "	1345A - 491	N/A	R40H521	R40H9237	R40H3502	R40H3503
	Fm	WG	15 " x 5 "	1345 - 490	N/A	R40H521	R40H9201	R40H3524	R40H3524
FA208	Fa	WG	15 " x 3-1/2 "	1280B - 322	R464004	R40H521	R40H9237	R40H3502	R40H3503
FA219	Fm	WG	15 " x 3-1/2 "	1280 - 463	R700463	R40H521	R40H9201	R40H3524	R40H3524
	Fm	WG	15 " x 3-1/2 "	1280 - 463	R700463	R40H521	R40H9201	R40H3524	R40H3524
	Fm	WG	15 " x 3-1/2 "	1280 - 463	R700463	R40H521	R40H9201	R40H3524	R40H3524
	Fm	WG	15 " x 3-1/2 "	1280 - 463	R700463	R40H521	R40H9201	R40H3524	R40H3524
	Fm	WG	15 " x 3-1/2 "	1280 - 463	R700463	R40H521	R40H9201	R40H3524	R40H3524
	Fm	WG	15 " x 3-1/2 "	1280 - 463	R700463	R40H521	R40H9201	R40H3524	R40H3524
	Fm	WG	15 " x 3-1/2 "	1280 - 463	R700463	R40H521	R40H9201	R40H3524	R40H3524
	Fm	WG	15 " x 3-1/2 "	1280 - 463	R700463	R40H521	R40H9201	R40H3524	R40H3524
	Fm	WG	15 " x 3-1/2 "	1280 - 463	R700463	R40H521	R40H9201	R40H3524	R40H3524
	Fm	WG	15 " x 3-1/2 "	1280 - 463	R700463	R40H521	R40H9201	R40H3524	R40H3524
	Fm	WG	15 " x 3-1/2 "	1280 - 463	R700463	R40H521	R40H9201	R40H3524	R40H3524
	Fm	WG	15 " x 3-1/2 "	1280 - 463	R700463	R40H521	R40H9201	R40H3524	R40H3524
	Fm	WG	15 " x 3-1/2 "	1280 - 463	R700463	R40H521	R40H9201	R40H3524	R40H3524
	Fm	WG	15 " x 3-1/2 "	1280 - 463	R700463	R40H521	R40H9201	R40H3524	R40H3524
	Fm	WG	15 " x 3-1/2 "	1280 - 463	R700463	R40H521	R40H9201	R40H3524	R40H3524
	Fm	WG	15 " x 3-1/2 "	1280 - 463	R700463	R40H521	R40H9201	R40H3524	R40H3524
	Fm	WG	15 " x 3-1/2 "	1280 - 463	R700463	R40H521	R40H9201	R40H3524	R40H3524
	Fm	WG	15 " x 3-1/2 "	1280 - 463	R700463	R40H521	R40H9201	R40H3524	R40H3524
	Fm	WG	15 " x 3-1/2 "	1280 - 463	R700463	R40H521	R40H9201	R40H3524	R40H3524
FA309, 329, 339	Fd	BX		7142 - D225	MD225	R40H5010	R40H5522	NR	NR
FA71, 73, 91, 98, 101, 109, 208	Fa	WG	15 " x 3 "	1245C - 321	R700321	R40H521	R40H9237	R40H3502	R40H3503
	Fa	WG	15 " x 3-1/2 "	1280B - 322	R464004	R40H521	R40H9237	R40H3502	R40H3503
	Fm	WG	15 " x 3-1/2 "	1280 - 463	R700463	R40H521	R40H9201	R40H3524	R40H3524
FA72	Fa	WG	14 " x 2-1/2 "	1294A - 325	N/A	R40H521	R40H9237	R40H3502	R40H3503
	Fm	WG	14 " x 2-1/2 "	1294 - 296	N/A	R40H521	R40H9201	R40H3524	R40H3524
RA39, 199	Rm	WG	15 " x 7 "	4597 - 383	R700383	R40H597	R40H9200	R40H3518	R404148
RA39, 42, 44, 186, 189	Ra	WG	15 " x 6 "	4596 - 381	R700381	R40H597	R40H9200	R40H3540	R40H3541
	Rm	WG	15 " x 6 "	4596 - 381	R700381	R40H597	R40H9200	R40H3518	R404148
RA39, 42, 44, 186, 199	Rd	BX		7142 - D225	MD225	R40H5010	R40H5522	NR	NR
RA44, 186, 286	Ra	WG	15 " x 7 "	4597 - 383	R700383	R40H597	R40H9200	R40H3540	R40H3541
	Rm	WG	15 " x 7 "	4597 - 383	R700383	R40H597	R40H9200	R40H3518	R404148
RA47, 57, 192	Ra	WG	16 " x 6 "	1255 - 386	N/A	R40H597	R40H9200	N/A	N/A
	Rm	WG	16 " x 6 "	1255 - 386	N/A	R40H597	R40H9200	R404149	R404150
S1724, S1754 Conventional FA71, 73, 91, 98, 101, 109, 208	Fm	WG	15 " x 3 "	1245A - 235	R700235	R40H521	R40H9201	R40H3524	R40H3524
1982									
RA39, 199	Ra	WG	15 " x 7 "	4597 - 383	R700383	R40H597	R40H9200	R40H3540	R40H3541

37 - Also available as a New unit

38 - First design, may have external joining tube and uses steel pistons

72 - Phenolic/Steel Face

201 - Steel Piston

266 - 10 Stud, Hat Shaped

267 - 10 Stud, U Shaped

269 - 5 Stud, U Shape

270 - 5 Stud, U Shape, .766 Dia. Studs

272 - 6 Stud, U Shape

MERITOR DRUM OR ROTOR NO.	CALIPER OR CYLINDER BORE SIZE	MERITOR CALIPER OR WHEEL CYLINDER (LEFT)	MERITOR CALIPER OR WHEEL CYLINDER (RIGHT)	MERITOR CALIPER OR WHEEL CYLINDER REPAIR KIT	MERITOR CALIPER PISTON	MERITOR MASTER CYLINDER	MERITOR MASTER CYLINDER KIT	MERITOR BRAKE HOSE (LEFT)	MERITOR BRAKE HOSE (RIGHT)
									ITE(Cont.)
180, 1800, 1810, 1823, 1824, 1850, 1853, 1854 SERIES CONVENTIONAL TRUCK, SCHOOL BUS, TILT CAB(Cont.)									
23-123552-004[266]	2-7/8 "	R42R55250	R42R55250[37]	R4066365	R4090096[72]	-	-	-	-
R44141629[269]	2-7/8 "	R42R55250	R42R55250[37]	R4066365	R4090096[72]	-	-	-	-
R44141608[267]	2-7/8 "	R42R55250	R42R55250[37]	R4066365	R4090096[72]	-	-	-	-
R44141627[270]	2-7/8 "	R42R55250	R42R55250[37]	R4066365	R4090096[72]	-	-	-	-
23-123552-004[266]	2-7/8 "	R42R55250	R42R55250[37]	R4066365	R4090096[72]	-	-	-	-
R44141627[270]	2-7/8 "	R42R55250	R42R55250[37]	R4066365	R4090096[72]	-	-	-	-
R44141858[275]	2-19/32 "	R42R55245	R42R55245[38]	R402235118	R402238231[201]	R4111912[331]	R4122386	-	-
23-122527-002[272]	3-3/8 "	R42R55099	R42R55098[37]	R4066780	R4090021[201]	-	-	-	-
R44141858[275]	2-19/32 "	R42R55245	R42R55245[38]	R402235118	R402238231[201]	R4111912[331]	R4122386	-	-
R44141858[275]	2-19/32 "	R42R55245	R42R55245[38]	R402235118	R402238231[201]	-	-	R4577503	R4577503
R44141858[275]	2-19/32 "	R42R55245	R42R55245[38]	R402235118	R402238231[201]	R4111993[302]	R4122386	-	-
R44141858[275]	2-19/32 "	R42R55245	R42R55245[38]	R402235118	R402238231[201]	R4111294[332]	R4122346	R4577503	R4577503
23-122527-002[272]	2-19/32 "	R42R55245	R42R55245[38]	R402235118	R402238231[201]	-	-	-	-
R44141858[275]	2-19/32 "	R42R55245	R42R55245[38]	R402235118	R402238231[201]	R4111294[332]	R4122346	R4577503	R4577503
R44141858[275]	2-19/32 "	R42R55245	R42R55245[38]	R402235118	R402238231[201]	R4111294[332]	R4122346	R4577503	R4577503
R44141858[275]	2-19/32 "	R42R55245	R42R55245[38]	R402235118	R402238231[201]	-	-	R458632	R458632
R44141858[275]	2-19/32 "	R42R55245	R42R55245[38]	R402235118	R402238231[201]	R4111912[331]	R4122386	-	-
23-122527-002[272]	3-3/8 "	R42R55099	R42R55098[37]	R4066780	R4090021[201]	-	-	-	-
N/A	1-5/8 "	R4133338	R4133338	R4166689	NR	-	-	-	-
N/A		-	-	N/A	N/A	-	-	-	-
N/A		-	-	N/A	N/A	-	-	-	-
N/A	1-1/4 "	R4133581	R4133582	R4166923	NR	-	-	-	-
N/A	1-1/4 "	R4133581	R4133582	R4166923	NR	-	-	-	-
N/A	1-1/4 "	R4133581	R4133582	R4166923	NR	-	-	-	-
N/A	1-1/4 "	R4133581	R4133582	R4166923	NR	-	-	-	-
N/A	1-1/4 "	R4133581	R4133582	R4166923	NR	-	-	-	-
N/A	1-1/4 "	R4133581	R4133582	R4166923	NR	-	-	-	-
N/A	1-1/4 "	R4133581	R4133582	R4166923	NR	-	-	-	-
N/A	1-1/4 "	R4133581	R4133582	R4166923	NR	-	-	-	-
N/A	1-1/4 "	R4133581	R4133582	R4166923	NR	-	-	-	-
N/A	1-1/4 "	R4133581	R4133582	R4166923	NR	-	-	-	-
N/A	1-1/4 "	R4133581	R4133582	R4166923	NR	-	-	-	-
N/A	1-1/4 "	R4133581	R4133582	R4166923	NR	-	-	-	-
N/A	1-1/4 "	R4133581	R4133582	R4166923	NR	-	-	-	-
N/A	1-1/4 "	R4133581	R4133582	R4166923	NR	-	-	-	-
N/A	1-1/4 "	R4133581	R4133582	R4166923	NR	-	-	-	-
N/A	1-1/4 "	R4133581	R4133582	R4166923	NR	-	-	-	-
N/A	1-1/4 "	R4133581	R4133582	R4166923	NR	-	-	-	-
N/A	1-1/4 "	R4133581	R4133582	R4166923	NR	-	-	-	-
N/A	1-1/4 "	R4133581	R4133582	R4166923	NR	-	-	-	-
N/A	1-1/4 "	R4133581	R4133582	R4166923	NR	-	-	-	-
23-122701-002[269]	2-7/8 "	R42R55250	R42R55250[37]	R4066365	R4090096[72]	-	-	-	-
N/A	1-1/4 "	R4133581	R4133582	R4166923	NR	-	-	-	-
N/A	1-1/4 "	R4133581	R4133582	R4166923	NR	-	-	-	-
N/A	1-1/4 "	R4133581	R4133582	R4166923	NR	-	-	-	-
N/A	1-1/8 "	R4133714	R4133715	R4166926	NR	-	-	-	-
N/A	1-1/8 "	R4133714	R4133715	R4166926	NR	-	-	-	-
N/A	1-5/8 "	R4133338	R4133338	R4166689	NR	-	-	-	-
N/A	1-5/8 "	R4133338	R4133338	R4166689	NR	-	-	-	-
N/A	1-5/8 "	R4133338	R4133338	R4166689	NR	-	-	-	-
N/A	2-7/8 "	R42R55250	R42R55250[37]	R4066365	R4090096[72]	-	-	-	-
N/A	1-5/8 "	R4133338	R4133338	R4166689	NR	-	-	-	-
N/A	1-5/8 "	R4133338	R4133338	R4166689	NR	-	-	-	-
N/A	1-3/4 "	R4133400	R4133400	R4166917	NR	-	-	-	-
N/A	1-3/4 "	R4133400	R4133400	R4166917	NR	-	-	-	-
N/A	1-1/4 "	R4133581	R4133582	R4166923	NR	-	-	-	-
N/A	1-5/8 "	R4133338	R4133338	R4166689	NR	-	-	-	-

275 - 5 Stud, U Shape, .656 Dia. Studs

302 - Power Brakes, Dual System

331 - Power Brakes, Delco Dual System

332 - Power Brakes, Hydraulic Booster

MAKE MODEL YEAR AXLE CODE AXLE WEIGHT	AXLE & BRK. TYPE	BRK. MFG.	BRAKE SIZE	FMSI	MERITOR DISC PAD OR BRAKE SHOE	MERITOR GUIDE PIN OR RETURN SPRING KIT	MERITOR CALIPER HWD. KIT OR RETURN SPRING KIT	MERITOR ADJUSTER KIT (LEFT WHEEL)	MERITOR ADJUSTER KIT (RIGHT WHEEL)
ITE(Cont.)									
180, 1800, 1810, 1823, 1824, 1850, 1853, 1854 SERIES CONVENTIONAL TRUCK, SCHOOL BUS, TILT CAB(Cont.)									
1982									
FA118, 127, 139	Fa	WG	15 " x 5 "	1345A - 491	N/A	R40H521	R40H9237	R40H3502	R40H3503
	Fm	WG	15 " x 5 "	1345 - 490	N/A	R40H521	R40H9201	R40H3524	R40H3524
FA208	Fa	WG	15 " x 3-1/2 "	1280B - 322	R464004	R40H521	R40H9237	R40H3502	R40H3503
FA71, 73, 91, 98, 101, 109, 208	Fa	WG	15 " x 3 "	1245C - 321	R700321	R40H521	R40H9237	R40H3502	R40H3503
	Fa	WG	15 " x 3 "	1245C - 321	R700321	R40H521	R40H9237	R40H3502	R40H3503
	Fa	WG	15 " x 3-1/2 "	1280B - 322	R464004	R40H521	R40H9237	R40H3502	R40H3503
	Fm	WG	15 " x 3 "	1245A - 235	R700235	R40H521	R40H9201	R40H3524	R40H3524
	Fm	WG	15 " x 3-1/2 "	1280 - 463	R700463	R40H521	R40H9201	R40H3524	R40H3524
FA72	Fa	WG	14 " x 2-1/2 "	1294A - 325	N/A	R40H521	R40H9237	R40H3502	R40H3503
	Fm	WG	14 " x 2-1/2 "	1294 - 296	N/A	R40H521	R40H9201	R40H3524	R40H3524
RA39, 199	Rm	WG	15 " x 7 "	4597 - 383	R700383	R40H597	R40H9200	R40H3518	R404148
RA39, 42, 44, 186, 189	Ra	WG	15 " x 6 "	4596 - 381	R700381	R40H597	R40H9200	R40H3540	R40H3541
	Rm	WG	15 " x 6 "	4596 - 381	R700381	R40H597	R40H9200	R40H3518	R404148
RA44, 186, 286	Ra	WG	15 " x 7 "	4597 - 383	R700383	R40H597	R40H9200	R40H3540	R40H3541
	Rm	WG	15 " x 7 "	4597 - 383	R700383	R40H597	R40H9200	R40H3518	R404148
RA47, 57, 192	Ra	WG	16 " x 6 "	1255 - 386	N/A	R40H597	R40H9200	N/A	N/A
	Rm	WG	16 " x 6 "	1255 - 386	N/A	R40H597	R40H9200	R404149	R404150
1981									
FA118, 127, 139	Fa	WG	15 " x 5 "	1345A - 491	N/A	R40H521	R40H9237	R40H3502	R40H3503
	Fm	WG	15 " x 5 "	1345 - 490	N/A	R40H521	R40H9201	R40H3524	R40H3524
FA208	Fa	WG	15 " x 3-1/2 "	1280B - 322	R464004	R40H521	R40H9237	R40H3502	R40H3503
FA71, 73, 91, 98, 101, 109, 208	Fa	WG	15 " x 3 "	1245C - 321	R700321	R40H521	R40H9237	R40H3502	R40H3503
	Fa	WG	15 " x 3 "	1245C - 321	R700321	R40H521	R40H9237	R40H3502	R40H3503
	Fa	WG	15 " x 3-1/2 "	1280B - 322	R464004	R40H521	R40H9237	R40H3502	R40H3503
	Fm	WG	15 " x 3 "	1245A - 235	R700235	R40H521	R40H9201	R40H3524	R40H3524
	Fm	WG	15 " x 3-1/2 "	1280 - 463	R700463	R40H521	R40H9201	R40H3524	R40H3524
FA72	Fa	WG	14 " x 2-1/2 "	1294A - 325	N/A	R40H521	R40H9237	R40H3502	R40H3503
	Fm	WG	14 " x 2-1/2 "	1294 - 296	N/A	R40H521	R40H9201	R40H3524	R40H3524
1980									
FA118, 127, 139	Fa	WG	15 " x 5 "	1345A - 491	N/A	R40H521	R40H9237	R40H3502	R40H3503
	Fm	WG	15 " x 5 "	1345 - 490	N/A	R40H521	R40H9201	R40H3524	R40H3524
FA208	Fa	WG	15 " x 3-1/2 "	1280B - 322	R464004	R40H521	R40H9237	R40H3502	R40H3503
FA71, 73, 91, 98, 101, 109, 208	Fa	WG	15 " x 3 "	1245C - 321	R700321	R40H521	R40H9237	R40H3502	R40H3503
	Fa	WG	15 " x 3-1/2 "	1280B - 322	R464004	R40H521	R40H9237	R40H3502	R40H3503
	Fm	WG	15 " x 3 "	1245A - 235	R700235	R40H521	R40H9201	R40H3524	R40H3524
	Fm	WG	15 " x 3-1/2 "	1280 - 463	R700463	R40H521	R40H9201	R40H3524	R40H3524
FA72	Fa	WG	14 " x 2-1/2 "	1294A - 325	N/A	R40H521	R40H9237	R40H3502	R40H3503
	Fm	WG	14 " x 2-1/2 "	1294 - 296	N/A	R40H521	R40H9201	R40H3524	R40H3524
1979									
FA118, 127, 139	Fa	WG	15 " x 5 "	1345A - 491	N/A	R40H521	R40H9237	R40H3502	R40H3503
	Fm	WG	15 " x 5 "	1345 - 490	N/A	R40H521	R40H9201	R40H3524	R40H3524
FA208	Fa	WG	15 " x 3-1/2 "	1280B - 322	R464004	R40H521	R40H9237	R40H3502	R40H3503
FA71, 73, 91, 98, 101, 109, 208	Fa	WG	15 " x 3 "	1245C - 321	R700321	R40H521	R40H9237	R40H3502	R40H3503
	Fa	WG	15 " x 3-1/2 "	1280B - 322	R464004	R40H521	R40H9237	R40H3502	R40H3503
	Fm	WG	15 " x 3 "	1245A - 235	R700235	R40H521	R40H9201	R40H3524	R40H3524
	Fm	WG	15 " x 3-1/2 "	1280 - 463	R700463	R40H521	R40H9201	R40H3524	R40H3524
FA72	Fa	WG	14 " x 2-1/2 "	1294A - 325	N/A	R40H521	R40H9237	R40H3502	R40H3503
	Fm	WG	14 " x 2-1/2 "	1294 - 296	N/A	R40H521	R40H9201	R40H3524	R40H3524
1978									
FA118, 127, 139	Fa	WG	15 " x 5 "	1345A - 491	N/A	R40H521	R40H9237	R40H3502	R40H3503
	Fm	WG	15 " x 5 "	1345 - 490	N/A	R40H521	R40H9201	R40H3524	R40H3524
FA208	Fa	WG	15 " x 3-1/2 "	1280B - 322	R464004	R40H521	R40H9237	R40H3502	R40H3503
FA71, 73, 91, 98, 101, 109, 208	Fa	WG	15 " x 3 "	1245C - 321	R700321	R40H521	R40H9237	R40H3502	R40H3503
	Fa	WG	15 " x 3-1/2 "	1280B - 322	R464004	R40H521	R40H9237	R40H3502	R40H3503
	Fm	WG	15 " x 3 "	1245A - 235	R700235	R40H521	R40H9201	R40H3524	R40H3524
	Fm	WG	15 " x 3-1/2 "	1280 - 463	R700463	R40H521	R40H9201	R40H3524	R40H3524

331 - Power Brakes, Delco Dual System

332 - Power Brakes, Hydraulic Booster

MERITOR DRUM OR ROTOR NO.	CALIPER OR CYLINDER BORE SIZE	MERITOR CALIPER OR WHEEL CYLINDER (LEFT)	MERITOR CALIPER OR WHEEL CYLINDER (RIGHT)	MERITOR CALIPER OR WHEEL CYLINDER REPAIR KIT	MERITOR CALIPER PISTON	MERITOR MASTER CYLINDER	MERITOR MASTER CYLINDER KIT	MERITOR BRAKE HOSE (LEFT)	MERITOR BRAKE HOSE (RIGHT)
									ITE(Cont.)
180, 1800, 1810, 1823, 1824, 1850, 1853, 1854 SERIES CONVENTIONAL TRUCK, SCHOOL BUS, TILT CAB(Cont.)									
N/A		-	-	N/A	N/A	-	-	-	-
N/A		-	-	N/A	N/A	-	-	-	-
N/A	1-1/4 "	R4133581	R4133582	R4166923	NR	-	-	-	-
N/A	1-1/4 "	R4133581	R4133582	R4166923	NR	R4111912[331]	R4122386	-	-
N/A	1-1/4 "	R4133581	R4133582	R4166923	NR	R4111294[332]	R4122346	R4577503	R4577503
N/A	1-1/4 "	R4133581	R4133582	R4166923	NR	-	-	-	-
N/A	1-1/4 "	R4133581	R4133582	R4166923	NR	-	-	-	-
N/A	1-1/4 "	R4133581	R4133582	R4166923	NR	-	-	-	-
N/A	1-1/8 "	R4133714	R4133715	R4166926	NR	-	-	-	-
N/A	1-1/8 "	R4133714	R4133715	R4166926	NR	-	-	-	-
N/A	1-5/8 "	R4133338	R4133338	R4166689	NR	-	-	-	-
N/A	1-5/8 "	R4133338	R4133338	R4166689	NR	-	-	-	-
N/A	1-5/8 "	R4133338	R4133338	R4166689	NR	-	-	-	-
N/A	1-5/8 "	R4133338	R4133338	R4166689	NR	-	-	-	-
N/A	1-5/8 "	R4133338	R4133338	R4166689	NR	-	-	-	-
N/A	1-3/4 "	R4133400	R4133400	R4166917	NR	-	-	-	-
N/A	1-3/4 "	R4133400	R4133400	R4166917	NR	-	-	-	-
N/A		-	-	N/A	N/A	-	-	-	-
N/A		-	-	N/A	N/A	-	-	-	-
N/A	1-1/4 "	R4133581	R4133582	R4166923	NR	-	-	-	-
N/A	1-1/4 "	R4133581	R4133582	R4166923	NR	R4111294[332]	R4122346	R4577503	R4577503
N/A	1-1/4 "	R4133581	R4133582	R4166923	NR	R4111912[331]	R4122386	-	-
N/A	1-1/4 "	R4133581	R4133582	R4166923	NR	-	-	-	-
N/A	1-1/4 "	R4133581	R4133582	R4166923	NR	-	-	-	-
N/A	1-1/4 "	R4133581	R4133582	R4166923	NR	-	-	-	-
N/A	1-1/8 "	R4133714	R4133715	R4166926	NR	-	-	-	-
N/A	1-1/8 "	R4133714	R4133715	R4166926	NR	-	-	-	-
N/A		-	-	N/A	N/A	-	-	-	-
N/A		-	-	N/A	N/A	-	-	-	-
N/A	1-1/4 "	R4133581	R4133582	R4166923	NR	-	-	-	-
N/A	1-1/4 "	R4133581	R4133582	R4166923	NR	-	-	-	-
N/A	1-1/4 "	R4133581	R4133582	R4166923	NR	-	-	-	-
N/A	1-1/4 "	R4133581	R4133582	R4166923	NR	-	-	-	-
N/A	1-1/4 "	R4133581	R4133582	R4166923	NR	-	-	-	-
N/A	1-1/8 "	R4133714	R4133715	R4166926	NR	-	-	-	-
N/A	1-1/8 "	R4133714	R4133715	R4166926	NR	-	-	-	-
N/A		-	-	N/A	N/A	-	-	-	-
N/A		-	-	N/A	N/A	-	-	-	-
N/A	1-1/4 "	R4133581	R4133582	R4166923	NR	-	-	-	-
N/A	1-1/4 "	R4133581	R4133582	R4166923	NR	-	-	-	-
N/A	1-1/4 "	R4133581	R4133582	R4166923	NR	-	-	-	-
N/A	1-1/4 "	R4133581	R4133582	R4166923	NR	-	-	-	-
N/A	1-1/4 "	R4133581	R4133582	R4166923	NR	-	-	-	-
N/A	1-1/8 "	R4133714	R4133715	R4166926	NR	-	-	-	-
N/A	1-1/8 "	R4133714	R4133715	R4166926	NR	-	-	-	-
N/A		-	-	N/A	N/A	-	-	-	-
N/A		-	-	N/A	N/A	-	-	-	-
N/A	1-1/4 "	R4133581	R4133582	R4166923	NR	-	-	-	-
N/A	1-1/4 "	R4133581	R4133582	R4166923	NR	-	-	-	-
N/A	1-1/4 "	R4133581	R4133582	R4166923	NR	-	-	-	-
N/A	1-1/4 "	R4133581	R4133582	R4166923	NR	-	-	-	-
N/A	1-1/4 "	R4133581	R4133582	R4166923	NR	-	-	-	-
N/A	1-1/8 "	R4133714	R4133715	R4166926	NR	-	-	-	-
N/A	1-1/8 "	R4133714	R4133715	R4166926	NR	-	-	-	-

MAKE MODEL YEAR AXLE CODE AXLE WEIGHT	AXLE & BRK. TYPE	BRK. MFG.	BRAKE SIZE	FMSI	MERITOR DISC PAD OR BRAKE SHOE	MERITOR GUIDE PIN OR RETURN SPRING KIT	MERITOR CALIPER HWD. KIT OR RETURN SPRING KIT	MERITOR ADJUSTER KIT (LEFT WHEEL)	MERITOR ADJUSTER KIT (RIGHT WHEEL)
ITE(Cont.)									
180, 1800, 1810, 1823, 1824, 1850, 1853, 1854 SERIES CONVENTIONAL TRUCK, SCHOOL BUS, TILT CAB(Cont.)									
1978									
FA72	Fa	WG	14 " x 2-1/2 "	1294A - 325	N/A	R40H521	R40H9237	R40H3502	R40H3503
	Fm	WG	14 " x 2-1/2 "	1294 - 296	N/A	R40H521	R40H9201	R40H3524	R40H3524
1977									
FA118, 127, 139	Fa	WG	15 " x 5 "	1345A - 491	N/A	R40H521	R40H9237	R40H3502	R40H3503
	Fm	WG	15 " x 5 "	1345 - 490	N/A	R40H521	R40H9201	R40H3524	R40H3524
FA208	Fa	WG	15 " x 3-1/2 "	1280B - 322	R464004	R40H521	R40H9237	R40H3502	R40H3503
FA71, 73, 91, 98, 101, 109, 208	Fa	WG	15 " x 3 "	1245C - 321	R700321	R40H521	R40H9237	R40H3502	R40H3503
	Fa	WG	15 " x 3-1/2 "	1280B - 322	R464004	R40H521	R40H9237	R40H3502	R40H3503
	Fm	WG	15 " x 3 "	1245A - 235	R700235	R40H521	R40H9201	R40H3524	R40H3524
	Fm	WG	15 " x 3-1/2 "	1280 - 463	R700463	R40H521	R40H9201	R40H3524	R40H3524
FA72	Fa	WG	14 " x 2-1/2 "	1294A - 325	N/A	R40H521	R40H9237	R40H3502	R40H3503
	Fm	WG	14 " x 2-1/2 "	1294 - 296	N/A	R40H521	R40H9201	R40H3524	R40H3524
1976									
FA118, 127, 139	Fa	WG	15 " x 5 "	1345A - 491	N/A	R40H521	R40H9237	R40H3502	R40H3503
	Fm	WG	15 " x 5 "	1345 - 490	N/A	R40H521	R40H9201	R40H3524	R40H3524
FA208	Fa	WG	15 " x 3-1/2 "	1280B - 322	R464004	R40H521	R40H9237	R40H3502	R40H3503
FA71, 73, 91, 98, 101, 109, 208	Fa	WG	15 " x 3 "	1245C - 321	R700321	R40H521	R40H9237	R40H3502	R40H3503
	Fa	WG	15 " x 3-1/2 "	1280B - 322	R464004	R40H521	R40H9237	R40H3502	R40H3503
	Fm	WG	15 " x 3 "	1245A - 235	R700235	R40H521	R40H9201	R40H3524	R40H3524
	Fm	WG	15 " x 3-1/2 "	1280 - 463	R700463	R40H521	R40H9201	R40H3524	R40H3524
FA72	Fa	WG	14 " x 2-1/2 "	1294A - 325	N/A	R40H521	R40H9237	R40H3502	R40H3503
	Fm	WG	14 " x 2-1/2 "	1294 - 296	N/A	R40H521	R40H9201	R40H3524	R40H3524
1975									
FA118, 127, 139	Fa	WG	15 " x 5 "	1345A - 491	N/A	R40H521	R40H9237	R40H3502	R40H3503
	Fm	WG	15 " x 5 "	1345 - 490	N/A	R40H521	R40H9201	R40H3524	R40H3524
FA208	Fa	WG	15 " x 3-1/2 "	1280B - 322	R464004	R40H521	R40H9237	R40H3502	R40H3503
FA71, 73, 91, 98, 101, 109, 208	Fa	WG	15 " x 3 "	1245C - 321	R700321	R40H521	R40H9237	R40H3502	R40H3503
	Fa	WG	15 " x 3-1/2 "	1280B - 322	R464004	R40H521	R40H9237	R40H3502	R40H3503
	Fm	WG	15 " x 3 "	1245A - 235	R700235	R40H521	R40H9201	R40H3524	R40H3524
	Fm	WG	15 " x 3-1/2 "	1280 - 463	R700463	R40H521	R40H9201	R40H3524	R40H3524
FA72	Fa	WG	14 " x 2-1/2 "	1294A - 325	N/A	R40H521	R40H9237	R40H3502	R40H3503
	Fm	WG	14 " x 2-1/2 "	1294 - 296	N/A	R40H521	R40H9201	R40H3524	R40H3524
1974									
FA118, 127, 139	Fa	WG	15 " x 5 "	1345A - 491	N/A	R40H521	R40H9237	R40H3502	R40H3503
	Fm	WG	15 " x 5 "	1345 - 490	N/A	R40H521	R40H9201	R40H3524	R40H3524
FA208	Fa	WG	15 " x 3-1/2 "	1280B - 322	R464004	R40H521	R40H9237	R40H3502	R40H3503
FA71, 73, 91, 98, 101, 109, 208	Fa	WG	15 " x 3 "	1245C - 321	R700321	R40H521	R40H9237	R40H3502	R40H3503
	Fa	WG	15 " x 3-1/2 "	1280B - 322	R464004	R40H521	R40H9237	R40H3502	R40H3503
	Fm	WG	15 " x 3 "	1245A - 235	R700235	R40H521	R40H9201	R40H3524	R40H3524
	Fm	WG	15 " x 3-1/2 "	1280 - 463	R700463	R40H521	R40H9201	R40H3524	R40H3524
FA72	Fa	WG	14 " x 2-1/2 "	1294A - 325	N/A	R40H521	R40H9237	R40H3502	R40H3503
	Fm	WG	14 " x 2-1/2 "	1294 - 296	N/A	R40H521	R40H9201	R40H3524	R40H3524
1973									
FA118, 127, 139	Fa	WG	15 " x 5 "	1345A - 491	N/A	R40H521	R40H9237	R40H3502	R40H3503
	Fm	WG	15 " x 5 "	1345 - 490	N/A	R40H521	R40H9201	R40H3524	R40H3524
FA208	Fa	WG	15 " x 3-1/2 "	1280B - 322	R464004	R40H521	R40H9237	R40H3502	R40H3503
FA71, 73, 91, 98, 101, 109, 208	Fa	WG	15 " x 3 "	1245C - 321	R700321	R40H521	R40H9237	R40H3502	R40H3503
	Fa	WG	15 " x 3-1/2 "	1280B - 322	R464004	R40H521	R40H9237	R40H3502	R40H3503
	Fm	WG	15 " x 3 "	1245A - 235	R700235	R40H521	R40H9201	R40H3524	R40H3524
	Fm	WG	15 " x 3-1/2 "	1280 - 463	R700463	R40H521	R40H9201	R40H3524	R40H3524
FA72	Fa	WG	14 " x 2-1/2 "	1294A - 325	N/A	R40H521	R40H9237	R40H3502	R40H3503
	Fm	WG	14 " x 2-1/2 "	1294 - 296	N/A	R40H521	R40H9201	R40H3524	R40H3524
1972									
FA118, 127, 139	Fa	WG	15 " x 5 "	1345A - 491	N/A	R40H521	R40H9237	R40H3502	R40H3503
	Fm	WG	15 " x 5 "	1345 - 490	N/A	R40H521	R40H9201	R40H3524	R40H3524
FA208	Fa	WG	15 " x 3-1/2 "	1280B - 322	R464004	R40H521	R40H9237	R40H3502	R40H3503

MERITOR DRUM OR ROTOR NO.	CALIPER OR CYLINDER BORE SIZE	MERITOR CALIPER OR WHEEL CYLINDER (LEFT)	MERITOR CALIPER OR WHEEL CYLINDER (RIGHT)	MERITOR CALIPER OR WHEEL CYLINDER REPAIR KIT	MERITOR CALIPER PISTON	MERITOR MASTER CYLINDER	MERITOR MASTER CYLINDER KIT	MERITOR BRAKE HOSE (LEFT)	MERITOR BRAKE HOSE (RIGHT)
									ITE(Cont.)
180, 1800, 1810, 1823, 1824, 1850, 1853, 1854 SERIES CONVENTIONAL TRUCK, SCHOOL BUS, TILT CAB(Cont.)									
N/A	1-1/8 "	R4133714	R4133715	R4166926	NR	-	-	-	-
N/A	1-1/8 "	R4133714	R4133715	R4166926	NR	-	-	-	-
-		-	-	-	-	-	-	-	-
-		-	-	-	-	-	-	-	-
-	1-1/4 "	R4133581	R4133582	R4166923	NR	-	-	-	-
-	1-1/4 "	R4133581	R4133582	R4166923	NR	-	-	-	-
-	1-1/4 "	R4133581	R4133582	R4166923	NR	-	-	-	-
-	1-1/4 "	R4133581	R4133582	R4166923	NR	-	-	-	-
-	1-1/8 "	R4133714	R4133715	R4166926	NR	-	-	-	-
-	1-1/8 "	R4133714	R4133715	R4166926	NR	-	-	-	-
-		-	-	-	-	-	-	-	-
-		-	-	-	-	-	-	-	-
-	1-1/4 "	R4133581	R4133582	R4166923	NR	-	-	-	-
-	1-1/4 "	R4133581	R4133582	R4166923	NR	-	-	-	-
-	1-1/4 "	R4133581	R4133582	R4166923	NR	-	-	-	-
-	1-1/4 "	R4133581	R4133582	R4166923	NR	-	-	-	-
-	1-1/8 "	R4133714	R4133715	R4166926	NR	-	-	-	-
-	1-1/8 "	R4133714	R4133715	R4166926	NR	-	-	-	-
-		-	-	-	-	-	-	-	-
-		-	-	-	-	-	-	-	-
-	1-1/4 "	R4133581	R4133582	R4166923	NR	-	-	-	-
-	1-1/4 "	R4133581	R4133582	R4166923	NR	-	-	-	-
-	1-1/4 "	R4133581	R4133582	R4166923	NR	-	-	-	-
-	1-1/4 "	R4133581	R4133582	R4166923	NR	-	-	-	-
-	1-1/8 "	R4133714	R4133715	R4166926	NR	-	-	-	-
-	1-1/8 "	R4133714	R4133715	R4166926	NR	-	-	-	-
-		-	-	-	-	-	-	-	-
-		-	-	-	-	-	-	-	-
-	1-1/4 "	R4133581	R4133582	R4166923	NR	-	-	-	-
-	1-1/4 "	R4133581	R4133582	R4166923	NR	-	-	-	-
-	1-1/4 "	R4133581	R4133582	R4166923	NR	-	-	-	-
-	1-1/4 "	R4133581	R4133582	R4166923	NR	-	-	-	-
-	1-1/8 "	R4133714	R4133715	R4166926	NR	-	-	-	-
-	1-1/8 "	R4133714	R4133715	R4166926	NR	-	-	-	-
-		-	-	-	-	-	-	-	-
-		-	-	-	-	-	-	-	-
-	1-1/4 "	R4133581	R4133582	R4166923	NR	-	-	-	-
-	1-1/4 "	R4133581	R4133582	R4166923	NR	-	-	-	-
-	1-1/4 "	R4133581	R4133582	R4166923	NR	-	-	-	-
-	1-1/4 "	R4133581	R4133582	R4166923	NR	-	-	-	-
-	1-1/8 "	R4133714	R4133715	R4166926	NR	-	-	-	-
-	1-1/8 "	R4133714	R4133715	R4166926	NR	-	-	-	-
-		-	-	-	-	-	-	-	-
-		-	-	-	-	-	-	-	-
-	1-1/4 "	R4133581	R4133582	R4166923	NR	-	-	-	-

MAKE MODEL YEAR AXLE CODE AXLE WEIGHT	AXLE & BRK. TYPE	BRK. MFG.	BRAKE SIZE	FMSI	MERITOR DISC PAD OR BRAKE SHOE	MERITOR GUIDE PIN OR RETURN SPRING KIT	MERITOR CALIPER HWD. KIT OR RETURN SPRING KIT	MERITOR ADJUSTER KIT (LEFT WHEEL)	MERITOR ADJUSTER KIT (RIGHT WHEEL)
ITE(Cont.)									
180, 1800, 1810, 1823, 1824, 1850, 1853, 1854 SERIES CONVENTIONAL TRUCK, SCHOOL BUS, TILT CAB(Cont.)									
1972									
FA71, 73, 91, 98, 101, 109, 208	Fa	WG	15 " x 3 "	1245C - 321	R700321	R40H521	R40H9237	R40H3502	R40H3503
	Fa	WG	15 " x 3-1/2 "	1280B - 322	R464004	R40H521	R40H9237	R40H3502	R40H3503
	Fm	WG	15 " x 3 "	1245A - 235	R700235	R40H521	R40H9201	R40H3524	R40H3524
	Fm	WG	15 " x 3-1/2 "	1280 - 463	R700463	R40H521	R40H9201	R40H3524	R40H3524
FA72	Fa	WG	14 " x 2-1/2 "	1294A - 325	N/A	R40H521	R40H9237	R40H3502	R40H3503
	Fm	WG	14 " x 2-1/2 "	1294 - 296	N/A	R40H521	R40H9201	R40H3524	R40H3524
1971									
FA118, 127, 139	Fa	WG	15 " x 5 "	1345A - 491	N/A	R40H521	R40H9237	R40H3502	R40H3503
	Fm	WG	15 " x 5 "	1345 - 490	N/A	R40H521	R40H9201	R40H3524	R40H3524
FA208	Fa	WG	15 " x 3-1/2 "	1280B - 322	R464004	R40H521	R40H9237	R40H3502	R40H3503
FA71, 73, 91, 98, 101, 109, 208	Fa	WG	15 " x 3 "	1245C - 321	R700321	R40H521	R40H9237	R40H3502	R40H3503
	Fa	WG	15 " x 3-1/2 "	1280B - 322	R464004	R40H521	R40H9237	R40H3502	R40H3503
	Fm	WG	15 " x 3 "	1245A - 235	R700235	R40H521	R40H9201	R40H3524	R40H3524
	Fm	WG	15 " x 3-1/2 "	1280 - 463	R700463	R40H521	R40H9201	R40H3524	R40H3524
FA72	Fa	WG	14 " x 2-1/2 "	1294A - 325	N/A	R40H521	R40H9237	R40H3502	R40H3503
	Fm	WG	14 " x 2-1/2 "	1294 - 296	N/A	R40H521	R40H9201	R40H3524	R40H3524
1970									
FA118, 127, 139	Fa	WG	15 " x 5 "	1345A - 491	N/A	R40H521	R40H9237	R40H3502	R40H3503
	Fm	WG	15 " x 5 "	1345 - 490	N/A	R40H521	R40H9201	R40H3524	R40H3524
FA208	Fa	WG	15 " x 3-1/2 "	1280B - 322	R464004	R40H521	R40H9237	R40H3502	R40H3503
FA71, 73, 91, 98, 101, 109, 208	Fa	WG	15 " x 3 "	1245C - 321	R700321	R40H521	R40H9237	R40H3502	R40H3503
	Fa	WG	15 " x 3-1/2 "	1280B - 322	R464004	R40H521	R40H9237	R40H3502	R40H3503
	Fm	WG	15 " x 3 "	1245A - 235	R700235	R40H521	R40H9201	R40H3524	R40H3524
	Fm	WG	15 " x 3-1/2 "	1280 - 463	R700463	R40H521	R40H9201	R40H3524	R40H3524
FA72	Fa	WG	14 " x 2-1/2 "	1294A - 325	N/A	R40H521	R40H9237	R40H3502	R40H3503
	Fm	WG	14 " x 2-1/2 "	1294 - 296	N/A	R40H521	R40H9201	R40H3524	R40H3524
1969									
FA118, 127, 139	Fa	WG	15 " x 5 "	1345A - 491	N/A	R40H521	R40H9237	R40H3502	R40H3503
	Fm	WG	15 " x 5 "	1345 - 490	N/A	R40H521	R40H9201	R40H3524	R40H3524
FA208	Fa	WG	15 " x 3-1/2 "	1280B - 322	R464004	R40H521	R40H9237	R40H3502	R40H3503
FA71, 73, 91, 98, 101, 109, 208	Fa	WG	15 " x 3 "	1245C - 321	R700321	R40H521	R40H9237	R40H3502	R40H3503
	Fa	WG	15 " x 3-1/2 "	1280B - 322	R464004	R40H521	R40H9237	R40H3502	R40H3503
	Fm	WG	15 " x 3 "	1245A - 235	R700235	R40H521	R40H9201	R40H3524	R40H3524
	Fm	WG	15 " x 3-1/2 "	1280 - 463	R700463	R40H521	R40H9201	R40H3524	R40H3524
FA72	Fa	WG	14 " x 2-1/2 "	1294A - 325	N/A	R40H521	R40H9237	R40H3502	R40H3503
	Fm	WG	14 " x 2-1/2 "	1294 - 296	N/A	R40H521	R40H9201	R40H3524	R40H3524
1968									
FA118, 127, 139	Fa	WG	15 " x 5 "	1345A - 491	N/A	R40H521	R40H9237	R40H3502	R40H3503
	Fm	WG	15 " x 5 "	1345 - 490	N/A	R40H521	R40H9201	R40H3524	R40H3524
FA208	Fa	WG	15 " x 3-1/2 "	1280B - 322	R464004	R40H521	R40H9237	R40H3502	R40H3503
FA71, 73, 91, 98, 101, 109, 208	Fa	WG	15 " x 3 "	1245C - 321	R700321	R40H521	R40H9237	R40H3502	R40H3503
	Fa	WG	15 " x 3-1/2 "	1280B - 322	R464004	R40H521	R40H9237	R40H3502	R40H3503
	Fm	WG	15 " x 3 "	1245A - 235	R700235	R40H521	R40H9201	R40H3524	R40H3524
	Fm	WG	15 " x 3-1/2 "	1280 - 463	R700463	R40H521	R40H9201	R40H3524	R40H3524
FA72	Fa	WG	14 " x 2-1/2 "	1294A - 325	N/A	R40H521	R40H9237	R40H3502	R40H3503
	Fm	WG	14 " x 2-1/2 "	1294 - 296	N/A	R40H521	R40H9201	R40H3524	R40H3524
1967									
FA118, 127, 139	Fa	WG	15 " x 5 "	1345A - 491	N/A	R40H521	R40H9237	R40H3502	R40H3503
	Fm	WG	15 " x 5 "	1345 - 490	N/A	R40H521	R40H9201	R40H3524	R40H3524
FA208	Fa	WG	15 " x 3-1/2 "	1280B - 322	R464004	R40H521	R40H9237	R40H3502	R40H3503
FA71, 73, 91, 98, 101, 109, 208	Fa	WG	15 " x 3 "	1245C - 321	R700321	R40H521	R40H9237	R40H3502	R40H3503
	Fa	WG	15 " x 3-1/2 "	1280B - 322	R464004	R40H521	R40H9237	R40H3502	R40H3503
	Fm	WG	15 " x 3 "	1245A - 235	R700235	R40H521	R40H9201	R40H3524	R40H3524
	Fm	WG	15 " x 3-1/2 "	1280 - 463	R700463	R40H521	R40H9201	R40H3524	R40H3524
FA72	Fa	WG	14 " x 2-1/2 "	1294A - 325	N/A	R40H521	R40H9237	R40H3502	R40H3503

MERITOR DRUM OR ROTOR NO.	CALIPER OR CYLINDER BORE SIZE	MERITOR CALIPER OR WHEEL CYLINDER (LEFT)	MERITOR CALIPER OR WHEEL CYLINDER (RIGHT)	MERITOR CALIPER OR WHEEL CYLINDER REPAIR KIT	MERITOR CALIPER PISTON	MERITOR MASTER CYLINDER	MERITOR MASTER CYLINDER KIT	MERITOR BRAKE HOSE (LEFT)	MERITOR BRAKE HOSE (RIGHT)
									ITE(Cont.)
180, 1800, 1810, 1823, 1824, 1850, 1853, 1854 SERIES CONVENTIONAL TRUCK, SCHOOL BUS, TILT CAB(Cont.)									
-	1-1/4 "	R4133581	R4133582	R4166923	NR	-	-	-	-
-	1-1/4 "	R4133581	R4133582	R4166923	NR	-	-	-	-
-	1-1/4 "	R4133581	R4133582	R4166923	NR	-	-	-	-
-	1-1/4 "	R4133581	R4133582	R4166923	NR	-	-	-	-
-	1-1/8 "	R4133714	R4133715	R4166926	NR	-	-	-	-
-	1-1/8 "	R4133714	R4133715	R4166926	NR	-	-	-	-
-		-	-	-	-	-	-	-	-
-		-	-	-	-	-	-	-	-
-	1-1/4 "	R4133581	R4133582	R4166923	NR	-	-	-	-
-	1-1/4 "	R4133581	R4133582	R4166923	NR	-	-	-	-
-	1-1/4 "	R4133581	R4133582	R4166923	NR	-	-	-	-
-	1-1/4 "	R4133581	R4133582	R4166923	NR	-	-	-	-
-	1-1/8 "	R4133714	R4133715	R4166926	NR	-	-	-	-
-	1-1/8 "	R4133714	R4133715	R4166926	NR	-	-	-	-
-		-	-	-	-	-	-	-	-
-		-	-	-	-	-	-	-	-
-	1-1/4 "	R4133581	R4133582	R4166923	NR	-	-	-	-
-	1-1/4 "	R4133581	R4133582	R4166923	NR	-	-	-	-
-	1-1/4 "	R4133581	R4133582	R4166923	NR	-	-	-	-
-	1-1/4 "	R4133581	R4133582	R4166923	NR	-	-	-	-
-	1-1/8 "	R4133714	R4133715	R4166926	NR	-	-	-	-
-	1-1/8 "	R4133714	R4133715	R4166926	NR	-	-	-	-
-		-	-	-	-	-	-	-	-
-		-	-	-	-	-	-	-	-
-	1-1/4 "	R4133581	R4133582	R4166923	NR	-	-	-	-
-	1-1/4 "	R4133581	R4133582	R4166923	NR	-	-	-	-
-	1-1/4 "	R4133581	R4133582	R4166923	NR	-	-	-	-
-	1-1/4 "	R4133581	R4133582	R4166923	NR	-	-	-	-
-	1-1/8 "	R4133714	R4133715	R4166926	NR	-	-	-	-
-	1-1/8 "	R4133714	R4133715	R4166926	NR	-	-	-	-
-		-	-	-	-	-	-	-	-
-		-	-	-	-	-	-	-	-
-	1-1/4 "	R4133581	R4133582	R4166923	NR	-	-	-	-
-	1-1/4 "	R4133581	R4133582	R4166923	NR	-	-	-	-
-	1-1/4 "	R4133581	R4133582	R4166923	NR	-	-	-	-
-	1-1/4 "	R4133581	R4133582	R4166923	NR	-	-	-	-
-	1-1/8 "	R4133714	R4133715	R4166926	NR	-	-	-	-
-	1-1/8 "	R4133714	R4133715	R4166926	NR	-	-	-	-
-		-	-	-	-	-	-	-	-
-		-	-	-	-	-	-	-	-
-	1-1/4 "	R4133581	R4133582	R4166923	NR	-	-	-	-
-	1-1/4 "	R4133581	R4133582	R4166923	NR	-	-	-	-
-	1-1/4 "	R4133581	R4133582	R4166923	NR	-	-	-	-
-	1-1/4 "	R4133581	R4133582	R4166923	NR	-	-	-	-
-	1-1/8 "	R4133714	R4133715	R4166926	NR	-	-	-	-
-	1-1/8 "	R4133714	R4133715	R4166926	NR	-	-	-	-
-		-	-	-	-	-	-	-	-
-		-	-	-	-	-	-	-	-
-	1-1/4 "	R4133581	R4133582	R4166923	NR	-	-	-	-
-	1-1/4 "	R4133581	R4133582	R4166923	NR	-	-	-	-
-	1-1/4 "	R4133581	R4133582	R4166923	NR	-	-	-	-
-	1-1/4 "	R4133581	R4133582	R4166923	NR	-	-	-	-
-	1-1/8 "	R4133714	R4133715	R4166926	NR	-	-	-	-

MAKE MODEL YEAR AXLE CODE AXLE WEIGHT	AXLE & BRK. TYPE	BRK. MFG.	BRAKE SIZE	FMSI	MERITOR DISC PAD OR BRAKE SHOE	MERITOR GUIDE PIN OR RETURN SPRING KIT	MERITOR CALIPER HWD. KIT OR RETURN SPRING KIT	MERITOR ADJUSTER KIT (LEFT WHEEL)	MERITOR ADJUSTER KIT (RIGHT WHEEL)
ITE(Cont.)									
180, 1800, 1810, 1823, 1824, 1850, 1853, 1854 SERIES CONVENTIONAL TRUCK, SCHOOL BUS, TILT CAB(Cont.)									
1967 FA72	Fm	WG	14 " x 2-1/2 "	1294 - 296	N/A	R40H521	R40H9201	R40H3524	R40H3524
1966 FA118, 127, 139	Fa	WG	15 " x 5 "	1345A - 491	N/A	R40H521	R40H9237	R40H3502	R40H3503
	Fm	WG	15 " x 5 "	1345 - 490	N/A	R40H521	R40H9201	R40H3524	R40H3524
FA208	Fa	WG	15 " x 3-1/2 "	1280B - 322	R464004	R40H521	R40H9237	R40H3502	R40H3503
FA71, 73, 91, 98, 101, 109, 208	Fa	WG	15 " x 3 "	1245C - 321	R700321	R40H521	R40H9237	R40H3502	R40H3503
	Fa	WG	15 " x 3-1/2 "	1280B - 322	R464004	R40H521	R40H9237	R40H3502	R40H3503
	Fm	WG	15 " x 3 "	1245A - 235	R700235	R40H521	R40H9201	R40H3524	R40H3524
	Fm	WG	15 " x 3-1/2 "	1280 - 463	R700463	R40H521	R40H9201	R40H3524	R40H3524
FA72	Fa	WG	14 " x 2-1/2 "	1294A - 325	N/A	R40H521	R40H9237	R40H3502	R40H3503
	Fm	WG	14 " x 2-1/2 "	1294 - 296	N/A	R40H521	R40H9201	R40H3524	R40H3524
1965 FA118, 127, 139	Fa	WG	15 " x 5 "	1345A - 491	N/A	R40H521	R40H9237	R40H3502	R40H3503
	Fm	WG	15 " x 5 "	1345 - 490	N/A	R40H521	R40H9201	R40H3524	R40H3524
FA208	Fa	WG	15 " x 3-1/2 "	1280B - 322	R464004	R40H521	R40H9237	R40H3502	R40H3503
FA71, 73, 91, 98, 101, 109, 208	Fa	WG	15 " x 3 "	1245C - 321	R700321	R40H521	R40H9237	R40H3502	R40H3503
	Fa	WG	15 " x 3-1/2 "	1280B - 322	R464004	R40H521	R40H9237	R40H3502	R40H3503
	Fm	WG	15 " x 3 "	1245A - 235	R700235	R40H521	R40H9201	R40H3524	R40H3524
	Fm	WG	15 " x 3-1/2 "	1280 - 463	R700463	R40H521	R40H9201	R40H3524	R40H3524
FA72	Fa	WG	14 " x 2-1/2 "	1294A - 325	N/A	R40H521	R40H9237	R40H3502	R40H3503
	Fm	WG	14 " x 2-1/2 "	1294 - 296	N/A	R40H521	R40H9201	R40H3524	R40H3524
190, 1900, 1910, 1950 SERIES CONVENTIONAL TILT CAB									
1989 S1910,S1950 Cargostar Cab Forward Code: 04145	Fd	BX		7108 - D184	MD184	R40H5010	R40H5519	NR	NR
	Fd	BX		7142 - D225	MD225	R40H5010	R40H5522	NR	NR
	Fd	BX		7108 - D184	MD184	R40H5010	R40H5519	NR	NR
	Fd	BX		7142 - D225	MD225	R40H5010	R40H5522	NR	NR
	Fd	BX		7108 - D184	MD184	R40H5010	R40H5519	NR	NR
	Fd	BX		7142 - D225	MD225	R40H5010	R40H5522	NR	NR
	Fd	BX		7142 - D225	MD225	R40H5010	R40H5522	NR	NR
	Fd	BX		7108 - D184	MD184	R40H5010	R40H5519	NR	NR
	Fd	BX		7108 - D184	MD184	R40H5010	R40H5519	NR	NR
	Fd	BX		7108 - D184	MD184	R40H5010	R40H5519	NR	NR
	Fd	BX		7108 - D184	MD184	R40H5010	R40H5519	NR	NR
	Fd	BX		7108 - D184	MD184	R40H5010	R40H5519	NR	NR
	Fd	BX		7142 - D225	MD225	R40H5010	R40H5522	NR	NR
	Fd	BX		7108 - D184	MD184	R40H5010	R40H5519	NR	NR
	Fd	BX		7142 - D225	MD225	R40H5010	R40H5522	NR	NR
	Fd	BX		7108 - D184	MD184	R40H5010	R40H5519	NR	NR
	Fd	BX		7108 - D184	MD184	R40H5010	R40H5519	NR	NR
	Fd	BX		7142 - D225	MD225	R40H5010	R40H5522	NR	NR
	Fd	BX		7142 - D225	MD225	R40H5010	R40H5522	NR	NR
	Fd	BX		7108 - D184	MD184	R40H5010	R40H5519	NR	NR
	Fd	BX		7142 - D225	MD225	R40H5010	R40H5522	NR	NR
	Fd	BX		7142 - D225	MD225	R40H5010	R40H5522	NR	NR
	Fd	BX		7108 - D184	MD184	R40H5010	R40H5519	NR	NR
	Fd	BX		7108 - D184	MD184	R40H5010	R40H5519	NR	NR
	Fd	BX		7108 - D184	MD184	R40H5010	R40H5519	NR	NR
	Fd	BX		7108 - D184	MD184	R40H5010	R40H5519	NR	NR
	Fd	BX		7108 - D184	MD184	R40H5010	R40H5519	NR	NR
	Fd	BX		7142 - D225	MD225	R40H5010	R40H5522	NR	NR
	Fd	BX		7108 - D184	MD184	R40H5010	R40H5519	NR	NR
	Fd	BX		7108 - D184	MD184	R40H5010	R40H5519	NR	NR
	Fd	BX		7142 - D225	MD225	R40H5010	R40H5522	NR	NR
	Fd	BX		7108 - D184	MD184	R40H5010	R40H5519	NR	NR
	Fd	BX		7142 - D225	MD225	R40H5010	R40H5522	NR	NR
S1910,S1950 Cargostar Cab Forward Code: 04237	Rd	BX		7108 - D184	MD184	R40H5010	R40H5519	NR	NR

37 - Also available as a New unit

38 - First design, may have external joining tube and uses steel pistons

52 - 18" Length

72 - Phenolic/Steel Face

201 - Steel Piston

266 - 10 Stud, Hat Shaped

268 - 5 Stud, Hat Shape

269 - 5 Stud, U Shape

271 - 6 Stud, Hat Shape

MERITOR DRUM OR ROTOR NO.	CALIPER OR CYLINDER BORE SIZE	MERITOR CALIPER OR WHEEL CYLINDER (LEFT)	MERITOR CALIPER OR WHEEL CYLINDER (RIGHT)	MERITOR CALIPER OR WHEEL CYLINDER REPAIR KIT	MERITOR CALIPER PISTON	MERITOR MASTER CYLINDER	MERITOR MASTER CYLINDER KIT	MERITOR BRAKE HOSE (LEFT)	MERITOR BRAKE HOSE (RIGHT)
									ITE(Cont.)
180, 1800, 1810, 1823, 1824, 1850, 1853, 1854 SERIES CONVENTIONAL TRUCK, SCHOOL BUS, TILT CAB(Cont.)									
-	1-1/8 "	R4133714	R4133715	R4166926	NR	-	-	-	-
-		-	-	-	-	-	-	-	-
-		-	-	-	-	-	-	-	-
-	1-1/4 "	R4133581	R4133582	R4166923	NR	-	-	-	-
-	1-1/4 "	R4133581	R4133582	R4166923	NR	-	-	-	-
-	1-1/4 "	R4133581	R4133582	R4166923	NR	-	-	-	-
-	1-1/4 "	R4133581	R4133582	R4166923	NR	-	-	-	-
-	1-1/4 "	R4133581	R4133582	R4166923	NR	-	-	-	-
-	1-1/8 "	R4133714	R4133715	R4166926	NR	-	-	-	-
-	1-1/8 "	R4133714	R4133715	R4166926	NR	-	-	-	-
-		-	-	-	-	-	-	-	-
-		-	-	-	-	-	-	-	-
-	1-1/4 "	R4133581	R4133582	R4166923	NR	-	-	-	-
-	1-1/4 "	R4133581	R4133582	R4166923	NR	-	-	-	-
-	1-1/4 "	R4133581	R4133582	R4166923	NR	-	-	-	-
-	1-1/4 "	R4133581	R4133582	R4166923	NR	-	-	-	-
-	1-1/4 "	R4133581	R4133582	R4166923	NR	-	-	-	-
-	1-1/4 "	R4133581	R4133582	R4166923	NR	-	-	-	-
-	1-1/8 "	R4133714	R4133715	R4166926	NR	-	-	-	-
-	1-1/8 "	R4133714	R4133715	R4166926	NR	-	-	-	-
190, 1900, 1910, 1950 SERIES CONVENTIONAL TILT CAB									
23-123552-004[266]	3-3/8 "	R42R55099	R42R55098[37]	R4066780	R4090021[201]	-	-	R458635	R458635
23-122527-002[272]	2-7/8 "	R42R55250	R42R55250[37]	R4066365	R4090096[72]	-	-	R458635	R458635
23-123552-004[266]	2-19/32 "	R42R55314	R42R55314[37]	R40107771	R4090100P[72]	-	-	R458635	R458635
23-122920-002[273]	2-7/8 "	R42R55250	R42R55250[37]	R4066365	R4090096[72]	-	-	R458635	R458635
23-123552-004[266]	3-3/8 "	R42R55099	R42R55098[37]	R4066780	R4090021[201]	-	-	R458632	R458632
23-122920-002[273]	2-7/8 "	R42R55250	R42R55250[37]	R4066365	R4090096[72]	-	-	R458632	R458632
R44141476[268]	2-7/8 "	R42R55250	R42R55250[37]	R4066365	R4090096[72]	-	-	R458632	R458632
23-122527-002[272]	2-19/32 "	R42R55314	R42R55314[37]	R40107771	R4090100P[72]	-	-	R458632	R458632
23-122920-002[273]	2-19/32 "	R42R55314	R42R55314[37]	R40107771	R4090100P[72]	-	-	R458635	R458635
23-122527-002[272]	3-3/8 "	R42R55099	R42R55098[37]	R4066780	R4090021[201]	-	-	R458632	R458632
R44141476[268]	2-19/32 "	R42R55314	R42R55314[37]	R40107771	R4090100P[72]	-	-	R458635	R458635
23-122527-002[272]	2-19/32 "	R42R55245	R42R55245[38]	R402235118	R402238231[201]	-	-	R458632	R458632
R44141476[268]	2-7/8 "	R42R55250	R42R55250[37]	R4066365	R4090096[72]	-	-	R458635	R458635
23-123572-004[271]	3-3/8 "	R42R55099	R42R55098[37]	R4066780	R4090021[201]	-	-	R458635	R458635
23-123552-004[266]	2-7/8 "	R42R55250	R42R55250[37]	R4066365	R4090096[72]	-	-	R458635	R458635
23-123572-004[271]	2-19/32 "	R42R55314	R42R55314[37]	R40107771	R4090100P[72]	-	-	R458635	R458635
23-122701-002[269]	2-19/32 "	R42R55314	R42R55314[37]	R40107771	R4090100P[72]	-	-	R458632	R458632
23-122701-002[269]	2-7/8 "	R42R55250	R42R55250[37]	R4066365	R4090096[72]	-	-	R458632	R458632
R44141858[275]	2-7/8 "	R42R55250	R42R55250[37]	R4066365	R4090096[72]	-	-	R458632	R458632
23-122920-002[273]	3-3/8 "	R42R55099	R42R55098[37]	R4066780	R4090021[201]	-	-	R458635	R458635
23-123552-004[266]	2-7/8 "	R42R55250	R42R55250[37]	R4066365	R4090096[72]	-	-	R458632	R458632
23-122701-002[269]	2-7/8 "	R42R55250	R42R55250[37]	R4066365	R4090096[72]	-	-	R458635	R458635
R44141858[275]	3-3/8 "	R42R55099	R42R55098[37]	R4066780	R4090021[201]	-	-	R458635	R458635
R44141858[275]	2-19/32 "	R42R55314	R42R55314[37]	R40107771	R4090100P[72]	-	-	R458635	R458635
23-122527-002[272]	3-3/8 "	R42R55099	R42R55098[37]	R4066780	R4090021[201]	-	-	R458635	R458635
23-122527-002[272]	2-19/32 "	R42R55314	R42R55314[37]	R40107771	R4090100P[72]	-	-	R458635	R458635
23-122701-002[269]	3-3/8 "	R42R55099	R42R55098[37]	R4066780	R4090021[201]	-	-	R458635	R458635
23-123572-004[271]	2-7/8 "	R42R55250	R42R55250[37]	R4066365	R4090096[72]	-	-	R458635	R458635
23-123552-004[266]	2-19/32 "	R42R55314	R42R55314[37]	R40107771	R4090100P[72]	-	-	R458632	R458632
R44141476[268]	3-3/8 "	R42R55099	R42R55098[37]	R4066780	R4090021[201]	-	-	R458635	R458635
R44141858[275]	2-7/8 "	R42R55250	R42R55250[37]	R4066365	R4090096[72]	-	-	R458635	R458635
23-122527-002[272]	2-19/32 "	R42R55245	R42R55245[38]	R402235118	R402238231[201]	-	-	R458635	R458635
23-123572-004[271]	2-7/8 "	R42R55250	R42R55250[37]	R4066365	R4090096[72]	-	-	R458632	R458632
23-123572-004[271]	2-19/32 "	R42R55314	R42R55314[37]	R40107771	R4090100P[72]	-	-	R458634[52]	R458634

272 - 6 Stud, U Shape

273 - 5 Stud, U Shape, .780 Dia. Studs

275 - 5 Stud, U Shape, .656 Dia. Studs

MAKE MODEL YEAR AXLE CODE AXLE WEIGHT	AXLE & BRK. TYPE	BRK. MFG.	BRAKE SIZE	FMSI	MERITOR DISC PAD OR BRAKE SHOE	MERITOR GUIDE PIN OR RETURN SPRING KIT	MERITOR CALIPER HWD. KIT OR RETURN SPRING KIT	MERITOR ADJUSTER KIT (LEFT WHEEL)	MERITOR ADJUSTER KIT (RIGHT WHEEL)
ITE(Cont.)									
190, 1900, 1910, 1950 SERIES CONVENTIONAL TILT CAB(Cont.)									
1989									
	Rd	BX		7108 - D184	MD184	R40H5010	R40H5519	NR	NR
	Rd	BX		7108 - D184	MD184	R40H5010	R40H5519	NR	NR
	Rd	BX		7108 - D184	MD184	R40H5010	R40H5519	NR	NR
	Rd	BX		7108 - D184	MD184	R40H5010	R40H5519	NR	NR
	Rd	BX		7108 - D184	MD184	R40H5010	R40H5519	NR	NR
	Rd	BX		7108 - D184	MD184	R40H5010	R40H5519	NR	NR
S1910,S1950 Cargostar Cab Forward									
Code: 04238	Rd	BX		7142 - D225	MD225	R40H5010	R40H5522	NR	NR
	Rd	BX		7142 - D225	MD225	R40H5010	R40H5522	NR	NR
	Rd	BX		7142 - D225	MD225	R40H5010	R40H5522	NR	NR
	Rd	BX		7142 - D225	MD225	R40H5010	R40H5522	NR	NR
	Rd	BX		7142 - D225	MD225	R40H5010	R40H5522	NR	NR
	Rd	BX		7142 - D225	MD225	R40H5010	R40H5522	NR	NR
	Rd	BX		7142 - D225	MD225	R40H5010	R40H5522	NR	NR
1988									
S1910,S1950 Cargostar Cab Forward									
Code: 04145	Fd	BX		7142 - D225	MD225	R40H5010	R40H5522	NR	NR
	Fd	BX		7142 - D225	MD225	R40H5010	R40H5522	NR	NR
	Fd	BX		7142 - D225	MD225	R40H5010	R40H5522	NR	NR
	Fd	BX		7108 - D184	MD184	R40H5010	R40H5519	NR	NR
	Fd	BX		7108 - D184	MD184	R40H5010	R40H5519	NR	NR
	Fd	BX		7108 - D184	MD184	R40H5010	R40H5519	NR	NR
	Fd	BX		7142 - D225	MD225	R40H5010	R40H5522	NR	NR
	Fd	BX		7142 - D225	MD225	R40H5010	R40H5522	NR	NR
	Fd	BX		7108 - D184	MD184	R40H5010	R40H5519	NR	NR
	Fd	BX		7142 - D225	MD225	R40H5010	R40H5522	NR	NR
	Fd	BX		7108 - D184	MD184	R40H5010	R40H5519	NR	NR
	Fd	BX		7142 - D225	MD225	R40H5010	R40H5522	NR	NR
	Fd	BX		7142 - D225	MD225	R40H5010	R40H5522	NR	NR
	Fd	BX		7142 - D225	MD225	R40H5010	R40H5522	NR	NR
	Fd	BX		7142 - D225	MD225	R40H5010	R40H5522	NR	NR
	Fd	BX		7142 - D225	MD225	R40H5010	R40H5522	NR	NR
	Fd	BX		7142 - D225	MD225	R40H5010	R40H5522	NR	NR
	Fd	BX		7142 - D225	MD225	R40H5010	R40H5522	NR	NR
	Fd	BX		7108 - D184	MD184	R40H5010	R40H5519	NR	NR
	Fd	BX		7142 - D225	MD225	R40H5010	R40H5522	NR	NR
	Fd	BX		7108 - D184	MD184	R40H5010	R40H5519	NR	NR
	Fd	BX		7108 - D184	MD184	R40H5010	R40H5519	NR	NR
	Fd	BX		7142 - D225	MD225	R40H5010	R40H5522	NR	NR
	Fd	BX		7108 - D184	MD184	R40H5010	R40H5519	NR	NR
	Fd	BX		7142 - D225	MD225	R40H5010	R40H5522	NR	NR
	Fd	BX		7142 - D225	MD225	R40H5010	R40H5522	NR	NR
	Fd	BX		7108 - D184	MD184	R40H5010	R40H5519	NR	NR
	Fd	BX		7108 - D184	MD184	R40H5010	R40H5519	NR	NR
	Fd	BX		7142 - D225	MD225	R40H5010	R40H5522	NR	NR
	Fd	BX		7142 - D225	MD225	R40H5010	R40H5522	NR	NR
	Fd	BX		7108 - D184	MD184	R40H5010	R40H5519	NR	NR
	Fd	BX		7108 - D184	MD184	R40H5010	R40H5519	NR	NR
	Fd	BX		7142 - D225	MD225	R40H5010	R40H5522	NR	NR
	Fd	BX		7142 - D225	MD225	R40H5010	R40H5522	NR	NR
	Fd	BX		7108 - D184	MD184	R40H5010	R40H5519	NR	NR
	Fd	BX		7108 - D184	MD184	R40H5010	R40H5519	NR	NR

37 - Also available as a New unit

38 - First design, may have external joining tube and uses steel pistons

52 - 18" Length

53 - Power Brakes

72 - Phenolic/Steel Face

201 - Steel Piston

266 - 10 Stud, Hat Shaped

267 - 10 Stud, U Shaped

268 - 5 Stud, Hat Shape

MERITOR DRUM OR ROTOR NO.	CALIPER OR CYLINDER BORE SIZE	MERITOR CALIPER OR WHEEL CYLINDER (LEFT)	MERITOR CALIPER OR WHEEL CYLINDER (RIGHT)	MERITOR CALIPER OR WHEEL CYLINDER REPAIR KIT	MERITOR CALIPER PISTON	MERITOR MASTER CYLINDER	MERITOR MASTER CYLINDER KIT	MERITOR BRAKE HOSE (LEFT)	MERITOR BRAKE HOSE (RIGHT)
									ITE(Cont.)
					190, 1900, 1910, 1950 SERIES CONVENTIONAL TILT CAB(Cont.)				
R44141627[270]	2-19/32 "	R42R55314	R42R55314[37]	R40107771	R4090100P[72]	-	-	R458634[52]	R458634
R44141608[267]	2-19/32 "	R42R55314	R42R55314[37]	R40107771	R4090100P[72]	-	-	R458634[52]	R458634
R44141629[269]	2-19/32 "	R42R55314	R42R55314[37]	R40107771	R4090100P[72]	-	-	R458634[52]	R458634
R44141628[269]	2-19/32 "	R42R55314	R42R55314[37]	R40107771	R4090100P[72]	-	-	R458634[52]	R458634
23-122527-002[272]	2-19/32 "	R42R55314	R42R55314[37]	R40107771	R4090100P[72]	-	-	R458634[52]	R458634
23-123552-004[266]	2-19/32 "	R42R55314	R42R55314[37]	R40107771	R4090100P[72]	-	-	R458634[52]	R458634
R44141628[269]	2-7/8 "	R42R55250	R42R55250[37]	R4066365	R4090096[72]	-	-	R458634[52]	R458634
23-122527-002[272]	2-7/8 "	R42R55250	R42R55250[37]	R4066365	R4090096[72]	-	-	R458634[52]	R458634
R44141629[269]	2-7/8 "	R42R55250	R42R55250[37]	R4066365	R4090096[72]	-	-	R458634[52]	R458634
23-123572-004[271]	2-7/8 "	R42R55250	R42R55250[37]	R4066365	R4090096[72]	-	-	R458634[52]	R458634
R44141608[267]	2-7/8 "	R42R55250	R42R55250[37]	R4066365	R4090096[72]	-	-	R458634[52]	R458634
23-123552-004[266]	2-7/8 "	R42R55250	R42R55250[37]	R4066365	R4090096[72]	-	-	R458634[52]	R458634
R44141627[270]	2-7/8 "	R42R55250	R42R55250[37]	R4066365	R4090096[72]	-	-	R458634[52]	R458634
23-123572-004[271]	2-7/8 "	R42R55250	R42R55250[37]	R4066365	R4090096[72]	N/A[53]	-	R458635	R458635
23-122920-002[273]	2-7/8 "	R42R55250	R42R55250[37]	R4066365	R4090096[72]	N/A[53]	-	R458635	R458635
R44141476[268]	2-7/8 "	R42R55250	R42R55250[37]	R4066365	R4090096[72]	N/A[53]	-	R458635	R458635
23-123572-004[271]	2-19/32 "	R42R55314	R42R55314[37]	R40107771	R4090100P[72]	N/A[53]	-	R458635	R458635
23-123552-004[266]	2-19/32 "	R42R55245	R42R55245[38]	R402235118	R402238231[201]	N/A[53]	-	R458632	R458632
23-122920-002[273]	3-3/8 "	R42R55099	R42R55098[37]	R4066780	R4090021[201]	N/A[53]	-	R458632	R458632
R44141858[275]	2-7/8 "	R42R55250	R42R55250[37]	R4066365	R4090096[72]	N/A[53]	-	R458635	R458635
23-122527-002[272]	2-7/8 "	R42R55250	R42R55250[37]	R4066365	R4090096[72]	N/A[53]	-	R458632	R458632
R44141858[275]	3-3/8 "	R42R55099	R42R55098[37]	R4066780	R4090021[201]	N/A[53]	-	R458635	R458635
23-122701-002[269]	2-7/8 "	R42R55250	R42R55250[37]	R4066365	R4090096[72]	N/A[53]	-	R458632	R458632
R44141476[268]	3-3/8 "	R42R55099	R42R55098[37]	R4066780	R4090021[201]	N/A[53]	-	R458635	R458635
23-122527-002[272]	2-7/8 "	R42R55250	R42R55250[37]	R4066365	R4090096[72]	N/A[53]	-	R458635	R458635
23-123572-004[271]	2-7/8 "	R42R55250	R42R55250[37]	R4066365	R4090096[72]	N/A[53]	-	R458632	R458632
23-123552-004[266]	2-7/8 "	R42R55250	R42R55250[37]	R4066365	R4090096[72]	N/A[53]	-	R458635	R458635
R44141476[268]	2-7/8 "	R42R55250	R42R55250[37]	R4066365	R4090096[72]	N/A[53]	-	R458632	R458632
23-122527-002[272]	2-7/8 "	R42R55250	R42R55250[37]	R4066365	R4090096[72]	N/A[53]	-	R458635	R458635
23-122701-002[269]	2-7/8 "	R42R55250	R42R55250[37]	R4066365	R4090096[72]	N/A[53]	-	R458632	R458632
23-122527-002[272]	2-7/8 "	R42R55250	R42R55250[37]	R4066365	R4090096[72]	N/A[53]	-	R458632	R458632
R44141476[268]	2-19/32 "	R42R55245	R42R55245[38]	R402235118	R402238231[201]	N/A[53]	-	R458632	R458632
23-123552-004[266]	2-7/8 "	R42R55250	R42R55250[37]	R4066365	R4090096[72]	N/A[53]	-	R458632	R458632
R44141858[275]	2-19/32 "	R42R55245	R42R55245[38]	R402235118	R402238231[201]	N/A[53]	-	R458635	R458635
23-123552-004[266]	2-19/32 "	R42R55314	R42R55314[37]	R40107771	R4090100P[72]	N/A[53]	-	R458632	R458632
23-122920-002[273]	2-7/8 "	R42R55250	R42R55250[37]	R4066365	R4090096[72]	N/A[53]	-	R458632	R458632
23-123572-004[271]	2-19/32 "	R42R55245	R42R55245[38]	R402235118	R402238231[201]	N/A[53]	-	R458635	R458635
23-122527-002[272]	2-7/8 "	R42R55250	R42R55250[37]	R4066365	R4090096[72]	N/A[53]	-	R458632	R458632
23-122527-002[272]	3-3/8 "	R42R55099	R42R55098[37]	R4066780	R4090021[201]	N/A[53]	-	R458632	R458632
R44141858[275]	2-19/32 "	R42R55245	R42R55245[38]	R402235118	R402238231[201]	N/A[53]	-	R458632	R458632
23-123572-004[271]	3-3/8 "	R42R55099	R42R55098[37]	R4066780	R4090021[201]	N/A[53]	-	R458635	R458635
23-122920-002[273]	2-19/32 "	R42R55314	R42R55314[37]	R40107771	R4090100P[72]	N/A[53]	-	R458635	R458635
R44141858[275]	2-7/8 "	R42R55250	R42R55250[37]	R4066365	R4090096[72]	N/A[53]	-	R458635	R458635
R44141476[268]	2-19/32 "	R42R55314	R42R55314[37]	R40107771	R4090100P[72]	N/A[53]	-	R458632	R458632
23-122701-002[269]	2-7/8 "	R42R55250	R42R55250[37]	R4066365	R4090096[72]	N/A[53]	-	R458635	R458635
R44141858[275]	2-7/8 "	R42R55250	R42R55250[37]	R4066365	R4090096[72]	N/A[53]	-	R458632	R458632
23-123552-004[266]	2-7/8 "	R42R55250	R42R55250[37]	R4066365	R4090096[72]	N/A[53]	-	R458632	R458632
23-123552-004[266]	3-3/8 "	R42R55099	R42R55098[37]	R4066780	R4090021[201]	N/A[53]	-	R458632	R458632
23-122701-002[269]	2-7/8 "	R42R55250	R42R55250[37]	R4066365	R4090096[72]	N/A[53]	-	R458635	R458635
23-123572-004[271]	2-7/8 "	R42R55250	R42R55250[37]	R4066365	R4090096[72]	N/A[53]	-	R458632	R458632
23-122701-002[269]	3-3/8 "	R42R55099	R42R55098[37]	R4066780	R4090021[201]	N/A[53]	-	R458635	R458635
R44141858[275]	2-7/8 "	R42R55250	R42R55250[37]	R4066365	R4090096[72]	N/A[53]	-	R458635	R458635
R44141858[275]	2-7/8 "	R42R55250	R42R55250[37]	R4066365	R4090096[72]	N/A[53]	-	R458635	R458635
23-122527-002[272]	3-3/8 "	R42R55099	R42R55098[37]	R4066780	R4090021[201]	N/A[53]	-	R458635	R458635
23-122701-002[269]	2-19/32 "	R42R55314	R42R55314[37]	R40107771	R4090100P[72]	N/A[53]	-	R458635	R458635
23-123552-004[266]	2-7/8 "	R42R55250	R42R55250[37]	R4066365	R4090096[72]	N/A[53]	-	R458635	R458635
23-123552-004[266]	2-7/8 "	R42R55250	R42R55250[37]	R4066365	R4090096[72]	N/A[53]	-	R458632	R458632
23-122920-002[273]	2-19/32 "	R42R55314	R42R55314[37]	R40107771	R4090100P[72]	N/A[53]	-	R458632	R458632
23-123572-004[271]	3-3/8 "	R42R55099	R42R55098[37]	R4066780	R4090021[201]	N/A[53]	-	R458632	R458632

269 - 5 Stud, U Shape

270 - 5 Stud, U Shape, .766 Dia. Studs

271 - 6 Stud, Hat Shape

272 - 6 Stud, U Shape

273 - 5 Stud, U Shape, .780 Dia. Studs

275 - 5 Stud, U Shape, .656 Dia. Studs

MAKE MODEL YEAR AXLE CODE AXLE WEIGHT	AXLE & BRK. TYPE	BRK. MFG.	BRAKE SIZE	FMSI	MERITOR DISC PAD OR BRAKE SHOE	MERITOR GUIDE PIN OR RETURN SPRING KIT	MERITOR CALIPER HWD. KIT OR RETURN SPRING KIT	MERITOR ADJUSTER KIT (LEFT WHEEL)	MERITOR ADJUSTER KIT (RIGHT WHEEL)
ITE(Cont.)									
190, 1900, 1910, 1950 SERIES CONVENTIONAL TILT CAB(Cont.)									
1988									
	Fd	BX		7142 - D225	MD225	R40H5010	R40H5522	NR	NR
	Fd	BX		7108 - D184	MD184	R40H5010	R40H5519	NR	NR
	Fd	BX		7108 - D184	MD184	R40H5010	R40H5519	NR	NR
	Fd	BX		7108 - D184	MD184	R40H5010	R40H5519	NR	NR
	Fd	BX		7108 - D184	MD184	R40H5010	R40H5519	NR	NR
	Fd	BX		7142 - D225	MD225	R40H5010	R40H5522	NR	NR
	Fd	BX		7142 - D225	MD225	R40H5010	R40H5522	NR	NR
	Fd	BX		7108 - D184	MD184	R40H5010	R40H5519	NR	NR
	Fd	BX		7108 - D184	MD184	R40H5010	R40H5519	NR	NR
	Fd	BX		7108 - D184	MD184	R40H5010	R40H5519	NR	NR
	Fd	BX		7142 - D225	MD225	R40H5010	R40H5522	NR	NR
	Fd	BX		7108 - D184	MD184	R40H5010	R40H5519	NR	NR
	Fd	BX		7108 - D184	MD184	R40H5010	R40H5519	NR	NR
	Fd	BX		7142 - D225	MD225	R40H5010	R40H5522	NR	NR
	Fd	BX		7108 - D184	MD184	R40H5010	R40H5519	NR	NR
	Fd	BX		7142 - D225	MD225	R40H5010	R40H5522	NR	NR
	Fd	BX		7108 - D184	MD184	R40H5010	R40H5519	NR	NR
	Fd	BX		7142 - D225	MD225	R40H5010	R40H5522	NR	NR
	Fd	BX		7108 - D184	MD184	R40H5010	R40H5519	NR	NR
	Fd	BX		7142 - D225	MD225	R40H5010	R40H5522	NR	NR
	Fd	BX		7142 - D225	MD225	R40H5010	R40H5522	NR	NR
	Fd	BX		7142 - D225	MD225	R40H5010	R40H5522	NR	NR
	Fd	BX		7142 - D225	MD225	R40H5010	R40H5522	NR	NR
	Fd	BX		7142 - D225	MD225	R40H5010	R40H5522	NR	NR
	Fd	BX		7142 - D225	MD225	R40H5010	R40H5522	NR	NR
	Fd	BX		7108 - D184	MD184	R40H5010	R40H5519	NR	NR
	Fd	BX		7142 - D225	MD225	R40H5010	R40H5522	NR	NR
	Fd	BX		7142 - D225	MD225	R40H5010	R40H5522	NR	NR
	Fd	BX		7142 - D225	MD225	R40H5010	R40H5522	NR	NR
	Fd	BX		7142 - D225	MD225	R40H5010	R40H5522	NR	NR
	Fd	BX		7108 - D184	MD184	R40H5010	R40H5519	NR	NR
	Fd	BX		7108 - D184	MD184	R40H5010	R40H5519	NR	NR
	Fd	BX		7142 - D225	MD225	R40H5010	R40H5522	NR	NR
	Fd	BX		7142 - D225	MD225	R40H5010	R40H5522	NR	NR
	Fd	BX		7142 - D225	MD225	R40H5010	R40H5522	NR	NR
	Fd	BX		7142 - D225	MD225	R40H5010	R40H5522	NR	NR
	Fd	BX		7142 - D225	MD225	R40H5010	R40H5522	NR	NR
	Fd	BX		7142 - D225	MD225	R40H5010	R40H5522	NR	NR
	Fd	BX		7108 - D184	MD184	R40H5010	R40H5519	NR	NR
	Fd	BX		7142 - D225	MD225	R40H5010	R40H5522	NR	NR
	Fd	BX		7142 - D225	MD225	R40H5010	R40H5522	NR	NR
	Fd	BX		7108 - D184	MD184	R40H5010	R40H5519	NR	NR
	Fd	BX		7108 - D184	MD184	R40H5010	R40H5519	NR	NR
S1910,S1950 Cargostar Cab Forward									
Code: 04237	Rd	BX		7108 - D184	MD184	R40H5010	R40H5519	NR	NR
	Rd	BX		7108 - D184	MD184	R40H5010	R40H5519	NR	NR
	Rd	BX		7108 - D184	MD184	R40H5010	R40H5519	NR	NR
	Rd	BX		7108 - D184	MD184	R40H5010	R40H5519	NR	NR
	Rd	BX		7108 - D184	MD184	R40H5010	R40H5519	NR	NR
	Rd	BX		7108 - D184	MD184	R40H5010	R40H5519	NR	NR
	Rd	BX		7108 - D184	MD184	R40H5010	R40H5519	NR	NR
	Rd	BX		7108 - D184	MD184	R40H5010	R40H5519	NR	NR
	Rd	BX		7108 - D184	MD184	R40H5010	R40H5519	NR	NR
	Rd	BX		7108 - D184	MD184	R40H5010	R40H5519	NR	NR
	Rd	BX		7108 - D184	MD184	R40H5010	R40H5519	NR	NR
	Rd	BX		7108 - D184	MD184	R40H5010	R40H5519	NR	NR
	Rd	BX		7108 - D184	MD184	R40H5010	R40H5519	NR	NR
S1910,S1950 Cargostar Cab Forward									
Code: 04238	Rd	BX		7142 - D225	MD225	R40H5010	R40H5522	NR	NR
	Rd	BX		7142 - D225	MD225	R40H5010	R40H5522	NR	NR
	Rd	BX		7142 - D225	MD225	R40H5010	R40H5522	NR	NR
	Rd	BX		7142 - D225	MD225	R40H5010	R40H5522	NR	NR

37 - Also available as a New unit

38 - First design, may have external joining tube and uses steel pistons

52 - 18" Length

53 - Power Brakes

72 - Phenolic/Steel Face

201 - Steel Piston

266 - 10 Stud, Hat Shaped

267 - 10 Stud, U Shaped

268 - 5 Stud, Hat Shape

MERITOR DRUM OR ROTOR NO.	CALIPER OR CYLINDER BORE SIZE	MERITOR CALIPER OR WHEEL CYLINDER (LEFT)	MERITOR CALIPER OR WHEEL CYLINDER (RIGHT)	MERITOR CALIPER OR WHEEL CYLINDER REPAIR KIT	MERITOR CALIPER PISTON	MERITOR MASTER CYLINDER	MERITOR MASTER CYLINDER KIT	MERITOR BRAKE HOSE (LEFT)	MERITOR BRAKE HOSE (RIGHT)
									ITE(Cont.)
									190, 1900, 1910, 1950 SERIES CONVENTIONAL TILT CAB(Cont.)
R44141476[268]	2-7/8 "	R42R55250	R42R55250[37]	R4066365	R4090096[72]	N/A[53]	-	R458635	R458635
23-123552-004[266]	3-3/8 "	R42R55099	R42R55098[37]	R4066780	R4090021[201]	N/A[53]	-	R458635	R458635
R44141476[268]	2-19/32 "	R42R55245	R42R55245[38]	R402235118	R402238231[201]	N/A[53]	-	R458635	R458635
R44141476[268]	3-3/8 "	R42R55099	R42R55098[37]	R4066780	R4090021[201]	N/A[53]	-	R458632	R458632
23-122701-002[269]	2-19/32 "	R42R55314	R42R55314[37]	R40107771	R4090100P[72]	N/A[53]	-	R458632	R458632
23-123572-004[271]	2-7/8 "	R42R55250	R42R55250[37]	R4066365	R4090096[72]	N/A[53]	-	R458632	R458632
23-122920-002[273]	2-7/8 "	R42R55250	R42R55250[37]	R4066365	R4090096[72]	N/A[53]	-	R458632	R458632
23-123572-004[271]	2-19/32 "	R42R55314	R42R55314[37]	R40107771	R4090100P[72]	N/A[53]	-	R458632	R458632
R44141476[268]	2-19/32 "	R42R55314	R42R55314[37]	R40107771	R4090100P[72]	N/A[53]	-	R458635	R458635
23-123552-004[266]	2-19/32 "	R42R55314	R42R55314[37]	R40107771	R4090100P[72]	N/A[53]	-	R458635	R458635
R44141858[275]	2-7/8 "	R42R55250	R42R55250[37]	R4066365	R4090096[72]	N/A[53]	-	R458632	R458632
R44141858[275]	2-19/32 "	R42R55314	R42R55314[37]	R40107771	R4090100P[72]	N/A[53]	-	R458635	R458635
23-122527-002[272]	2-19/32 "	R42R55245	R42R55245[38]	R402235118	R402238231[201]	N/A[53]	-	R458635	R458635
23-122920-002[273]	2-7/8 "	R42R55250	R42R55250[37]	R4066365	R4090096[72]	N/A[53]	-	R458635	R458635
23-123552-004[266]	2-19/32 "	R42R55245	R42R55245[38]	R402235118	R402238231[201]	N/A[53]	-	R458635	R458635
R44141858[275]	2-7/8 "	R42R55250	R42R55250[37]	R4066365	R4090096[72]	N/A[53]	-	R458632	R458632
R44141858[275]	3-3/8 "	R42R55099	R42R55098[37]	R4066780	R4090021[201]	N/A[53]	-	R458632	R458632
23-122701-002[269]	2-7/8 "	R42R55250	R42R55250[37]	R4066365	R4090096[72]	N/A[53]	-	R458635	R458635
23-122527-002[272]	2-19/32 "	R42R55314	R42R55314[37]	R40107771	R4090100P[72]	N/A[53]	-	R458635	R458635
23-123572-004[271]	2-7/8 "	R42R55250	R42R55250[37]	R4066365	R4090096[72]	N/A[53]	-	R458632	R458632
23-122920-002[273]	2-7/8 "	R42R55250	R42R55250[37]	R4066365	R4090096[72]	N/A[53]	-	R458635	R458635
23-122701-002[269]	2-7/8 "	R42R55250	R42R55250[37]	R4066365	R4090096[72]	N/A[53]	-	R458632	R458632
23-122527-002[272]	2-7/8 "	R42R55250	R42R55250[37]	R4066365	R4090096[72]	N/A[53]	-	R458635	R458635
23-122920-002[273]	2-7/8 "	R42R55250	R42R55250[37]	R4066365	R4090096[72]	N/A[53]	-	R458632	R458632
23-123572-004[271]	2-7/8 "	R42R55250	R42R55250[37]	R4066365	R4090096[72]	N/A[53]	-	R458635	R458635
23-122527-002[272]	2-19/32 "	R42R55314	R42R55314[37]	R40107771	R4090100P[72]	N/A[53]	-	R458632	R458632
23-123572-004[271]	2-7/8 "	R42R55250	R42R55250[37]	R4066365	R4090096[72]	N/A[53]	-	R458635	R458635
23-123572-004[271]	2-7/8 "	R42R55250	R42R55250[37]	R4066365	R4090096[72]	N/A[53]	-	R458635	R458635
R44141476[268]	2-7/8 "	R42R55250	R42R55250[37]	R4066365	R4090096[72]	N/A[53]	-	R458632	R458632
23-122920-002[273]	3-3/8 "	R42R55099	R42R55098[37]	R4066780	R4090021[201]	N/A[53]	-	R458635	R458635
23-122701-002[269]	3-3/8 "	R42R55099	R42R55098[37]	R4066780	R4090021[201]	N/A[53]	-	R458632	R458632
23-123552-004[266]	2-7/8 "	R42R55250	R42R55250[37]	R4066365	R4090096[72]	N/A[53]	-	R458635	R458635
R44141476[268]	2-7/8 "	R42R55250	R42R55250[37]	R4066365	R4090096[72]	N/A[53]	-	R458635	R458635
R44141476[268]	2-7/8 "	R42R55250	R42R55250[37]	R4066365	R4090096[72]	N/A[53]	-	R458632	R458632
23-123552-004[266]	2-7/8 "	R42R55250	R42R55250[37]	R4066365	R4090096[72]	N/A[53]	-	R458635	R458635
R44141858[275]	2-7/8 "	R42R55250	R42R55250[37]	R4066365	R4090096[72]	N/A[53]	-	R458632	R458632
23-122527-002[272]	2-7/8 "	R42R55250	R42R55250[37]	R4066365	R4090096[72]	N/A[53]	-	R458632	R458632
23-123572-004[271]	2-19/32 "	R42R55245	R42R55245[38]	R402235118	R402238231[201]	N/A[53]	-	R458632	R458632
23-122527-002[272]	2-7/8 "	R42R55250	R42R55250[37]	R4066365	R4090096[72]	N/A[53]	-	R458635	R458635
23-123552-004[266]	2-7/8 "	R42R55250	R42R55250[37]	R4066365	R4090096[72]	N/A[53]	-	R458632	R458632
23-122527-002[272]	2-19/32 "	R42R55245	R42R55245[38]	R402235118	R402238231[201]	N/A[53]	-	R458632	R458632
R44141858[275]	2-19/32 "	R42R55314	R42R55314[37]	R40107771	R4090100P[72]	N/A[53]	-	R458632	R458632
R44141628[269]	2-19/32 "	R42R55245	R42R55245[38]	R402235118	R402238231[201]	-	-	R458634[52]	R458634
23-122527-002[272]	2-19/32 "	R42R55245	R42R55245[38]	R402235118	R402238231[201]	-	-	R458634[52]	R458634
23-123572-004[271]	2-19/32 "	R42R55245	R42R55245[38]	R402235118	R402238231[201]	-	-	R458634[52]	R458634
23-123572-004[271]	2-19/32 "	R42R55245	R42R55245[38]	R40107771	R4090100P[201]	-	-	R458634[52]	R458634
R44141629[269]	2-19/32 "	R42R55245	R42R55245[38]	R402235118	R402238231[201]	-	-	R458634[52]	R458634
R44141627[270]	2-19/32 "	R42R55245	R42R55245[38]	R402235118	R402238231[201]	-	-	R458634[52]	R458634
R44141627[270]	2-19/32 "	R42R55245	R42R55245[38]	R40107771	R4090100P[201]	-	-	R458634[52]	R458634
23-123552-004[266]	2-19/32 "	R42R55245	R42R55245[38]	R40107771	R4090100P[201]	-	-	R458634[52]	R458634
R44141608[267]	2-19/32 "	R42R55245	R42R55245[38]	R402235118	R402238231[201]	-	-	R458634[52]	R458634
R44141608[267]	2-19/32 "	R42R55245	R42R55245[38]	R40107771	R4090100P[201]	-	-	R458634[52]	R458634
R44141629[269]	2-19/32 "	R42R55245	R42R55245[38]	R40107771	R4090100P[201]	-	-	R458634[52]	R458634
23-123552-004[266]	2-19/32 "	R42R55245	R42R55245[38]	R402235118	R402238231[201]	-	-	R458634[52]	R458634
R44141628[269]	2-19/32 "	R42R55245	R42R55245[38]	R40107771	R4090100P[201]	-	-	R458634[52]	R458634
23-122527-002[272]	2-19/32 "	R42R55314	R42R55314[37]	R40107771	R4090100P[72]	-	-	R458634[52]	R458634
R44141608[267]	2-7/8 "	R42R55250	R42R55250[37]	R4066365	R4090096[72]	-	-	R458634[52]	R458634
R44141629[269]	2-7/8 "	R42R55250	R42R55250[37]	R4066365	R4090096[72]	-	-	R458634[52]	R458634
23-122527-002[272]	2-7/8 "	R42R55250	R42R55250[37]	R4066365	R4090096[72]	-	-	R458634[52]	R458634
R44141628[269]	2-7/8 "	R42R55250	R42R55250[37]	R4066365	R4090096[72]	-	-	R458634[52]	R458634

269 - 5 Stud, U Shape

270 - 5 Stud, U Shape, .766 Dia. Studs

271 - 6 Stud, Hat Shape

272 - 6 Stud, U Shape

273 - 5 Stud, U Shape, .780 Dia. Studs

275 - 5 Stud, U Shape, .656 Dia. Studs

MAKE MODEL YEAR AXLE CODE AXLE WEIGHT	AXLE & BRK. TYPE	BRK. MFG.	BRAKE SIZE	FMSI	MERITOR DISC PAD OR BRAKE SHOE	MERITOR GUIDE PIN OR RETURN SPRING KIT	MERITOR CALIPER HWD. KIT OR RETURN SPRING KIT	MERITOR ADJUSTER KIT (LEFT WHEEL)	MERITOR ADJUSTER KIT (RIGHT WHEEL)
ITE(Cont.)									
190, 1900, 1910, 1950 SERIES CONVENTIONAL TILT CAB(Cont.)									
1988									
	Rd	BX		7142 - D225	MD225	R40H5010	R40H5522	NR	NR
	Rd	BX		7142 - D225	MD225	R40H5010	R40H5522	NR	NR
	Rd	BX		7142 - D225	MD225	R40H5010	R40H5522	NR	NR
	Rd	BX		7142 - D225	MD225	R40H5010	R40H5522	NR	NR
	Rd	BX		7142 - D225	MD225	R40H5010	R40H5522	NR	NR
	Rd	BX		7142 - D225	MD225	R40H5010	R40H5522	NR	NR
	Rd	BX		7142 - D225	MD225	R40H5010	R40H5522	NR	NR
	Rd	BX		7142 - D225	MD225	R40H5010	R40H5522	NR	NR
	Rd	BX		7142 - D225	MD225	R40H5010	R40H5522	NR	NR
	Rd	BX		7142 - D225	MD225	R40H5010	R40H5522	NR	NR
	Rd	BX		7142 - D225	MD225	R40H5010	R40H5522	NR	NR
	Rd	BX		7142 - D225	MD225	R40H5010	R40H5522	NR	NR
	Rd	BX		7142 - D225	MD225	R40H5010	R40H5522	NR	NR
	Rd	BX		7142 - D225	MD225	R40H5010	R40H5522	NR	NR
	Rd	BX		7142 - D225	MD225	R40H5010	R40H5522	NR	NR
	Rd	BX		7142 - D225	MD225	R40H5010	R40H5522	NR	NR
	Rd	BX		7142 - D225	MD225	R40H5010	R40H5522	NR	NR
	Rd	BX		7142 - D225	MD225	R40H5010	R40H5522	NR	NR
	Rd	BX		7142 - D225	MD225	R40H5010	R40H5522	NR	NR
	Rd	BX		7142 - D225	MD225	R40H5010	R40H5522	NR	NR
	Rd	BX		7142 - D225	MD225	R40H5010	R40H5522	NR	NR
	Rd	BX		7142 - D225	MD225	R40H5010	R40H5522	NR	NR
	Rd	BX		7142 - D225	MD225	R40H5010	R40H5522	NR	NR
1987 S1910,S1950 Cargostar Cab Forward Code: 04145	Fd	BX		7108 - D184	MD184	R40H5010	R40H5519	NR	NR
	Fd	BX		7142 - D225	MD225	R40H5010	R40H5522	NR	NR
	Fd	BX		7142 - D225	MD225	R40H5010	R40H5522	NR	NR
	Fd	BX		7142 - D225	MD225	R40H5010	R40H5522	NR	NR
	Fd	BX		7108 - D184	MD184	R40H5010	R40H5519	NR	NR
	Fd	BX		7142 - D225	MD225	R40H5010	R40H5522	NR	NR
	Fd	BX		7108 - D184	MD184	R40H5010	R40H5519	NR	NR
	Fd	BX		7108 - D184	MD184	R40H5010	R40H5519	NR	NR
	Fd	BX		7142 - D225	MD225	R40H5010	R40H5522	NR	NR
	Fd	BX		7108 - D184	MD184	R40H5010	R40H5519	NR	NR
	Fd	BX		7108 - D184	MD184	R40H5010	R40H5519	NR	NR
	Fd	BX		7142 - D225	MD225	R40H5010	R40H5522	NR	NR
	Fd	BX		7108 - D184	MD184	R40H5010	R40H5519	NR	NR
	Fd	BX		7142 - D225	MD225	R40H5010	R40H5522	NR	NR
	Fd	BX		7108 - D184	MD184	R40H5010	R40H5519	NR	NR
	Fd	BX		7142 - D225	MD225	R40H5010	R40H5522	NR	NR
	Fd	BX		7142 - D225	MD225	R40H5010	R40H5522	NR	NR
	Fd	BX		7108 - D184	MD184	R40H5010	R40H5519	NR	NR
	Fd	BX		7108 - D184	MD184	R40H5010	R40H5519	NR	NR
	Fd	BX		7108 - D184	MD184	R40H5010	R40H5519	NR	NR
	Fd	BX		7142 - D225	MD225	R40H5010	R40H5522	NR	NR
	Fd	BX		7142 - D225	MD225	R40H5010	R40H5522	NR	NR
	Fd	BX		7142 - D225	MD225	R40H5010	R40H5522	NR	NR
	Fd	BX		7108 - D184	MD184	R40H5010	R40H5519	NR	NR
	Fd	BX		7142 - D225	MD225	R40H5010	R40H5522	NR	NR
	Fd	BX		7142 - D225	MD225	R40H5010	R40H5522	NR	NR
	Fd	BX		7142 - D225	MD225	R40H5010	R40H5522	NR	NR
	Fd	BX		7108 - D184	MD184	R40H5010	R40H5519	NR	NR
	Fd	BX		7142 - D225	MD225	R40H5010	R40H5522	NR	NR
	Fd	BX		7142 - D225	MD225	R40H5010	R40H5522	NR	NR
	Fd	BX		7142 - D225	MD225	R40H5010	R40H5522	NR	NR
	Fd	BX		7108 - D184	MD184	R40H5010	R40H5519	NR	NR
	Fd	BX		7142 - D225	MD225	R40H5010	R40H5522	NR	NR
	Fd	BX		7108 - D184	MD184	R40H5010	R40H5519	NR	NR
	Fd	BX		7142 - D225	MD225	R40H5010	R40H5522	NR	NR

37 - Also available as a New unit

38 - First design, may have external joining tube and uses steel pistons

52 - 18" Length

53 - Power Brakes

72 - Phenolic/Steel Face

201 - Steel Piston

266 - 10 Stud, Hat Shaped

267 - 10 Stud, U Shaped

268 - 5 Stud, Hat Shape

MERITOR DRUM OR ROTOR NO.	CALIPER OR CYLINDER BORE SIZE	MERITOR CALIPER OR WHEEL CYLINDER (LEFT)	MERITOR CALIPER OR WHEEL CYLINDER (RIGHT)	MERITOR CALIPER OR WHEEL CYLINDER REPAIR KIT	MERITOR CALIPER PISTON	MERITOR MASTER CYLINDER	MERITOR MASTER CYLINDER KIT	MERITOR BRAKE HOSE (LEFT)	MERITOR BRAKE HOSE (RIGHT)
									ITE(Cont.)
					190, 1900, 1910, 1950 SERIES CONVENTIONAL TILT CAB(Cont.)				
R44141628[269]	2-7/8 "	R42R55250	R42R55250[37]	R4066365	R4090096[72]	-	-	R458634[52]	R458634
23-123572-004[271]	2-7/8 "	R42R55250	R42R55250[37]	R4066365	R4090096[72]	-	-	R458634[52]	R458634
R44141627[270]	2-7/8 "	R42R55250	R42R55250[37]	R4066365	R4090096[72]	-	-	R458634[52]	R458634
23-122527-002[272]	2-7/8 "	R42R55250	R42R55250[37]	R4066365	R4090096[72]	-	-	R458634[52]	R458634
R44141627[270]	2-7/8 "	R42R55250	R42R55250[37]	R4066365	R4090096[72]	-	-	R458634[52]	R458634
R44141629[269]	2-7/8 "	R42R55250	R42R55250[37]	R4066365	R4090096[72]	-	-	R458634[52]	R458634
R44141629[269]	2-7/8 "	R42R55250	R42R55250[37]	R4066365	R4090096[72]	-	-	R458634[52]	R458634
23-123572-004[271]	2-7/8 "	R42R55250	R42R55250[37]	R4066365	R4090096[72]	-	-	R458634[52]	R458634
23-123552-004[266]	2-7/8 "	R42R55250	R42R55250[37]	R4066365	R4090096[72]	-	-	R458634[52]	R458634
23-123572-004[271]	2-7/8 "	R42R55250	R42R55250[37]	R4066365	R4090096[72]	-	-	R458634[52]	R458634
R44141628[269]	2-7/8 "	R42R55250	R42R55250[37]	R4066365	R4090096[72]	-	-	R458634[52]	R458634
23-122527-002[272]	2-7/8 "	R42R55250	R42R55250[37]	R4066365	R4090096[72]	-	-	R458634[52]	R458634
23-122527-002[272]	2-7/8 "	R42R55250	R42R55250[37]	R4066365	R4090096[72]	-	-	R458634[52]	R458634
23-123552-004[266]	2-7/8 "	R42R55250	R42R55250[37]	R4066365	R4090096[72]	-	-	R458634[52]	R458634
23-123552-004[266]	2-7/8 "	R42R55250	R42R55250[37]	R4066365	R4090096[72]	-	-	R458634[52]	R458634
23-123552-004[266]	2-7/8 "	R42R55250	R42R55250[37]	R4066365	R4090096[72]	-	-	R458634[52]	R458634
23-123572-004[271]	2-7/8 "	R42R55250	R42R55250[37]	R4066365	R4090096[72]	-	-	R458634[52]	R458634
R44141627[270]	2-7/8 "	R42R55250	R42R55250[37]	R4066365	R4090096[72]	-	-	R458634[52]	R458634
R44141608[267]	2-7/8 "	R42R55250	R42R55250[37]	R4066365	R4090096[72]	-	-	R458634[52]	R458634
R44141608[267]	2-7/8 "	R42R55250	R42R55250[37]	R4066365	R4090096[72]	-	-	R458634[52]	R458634
R44141608[267]	2-7/8 "	R42R55250	R42R55250[37]	R4066365	R4090096[72]	-	-	R458634[52]	R458634
R44141629[269]	2-7/8 "	R42R55250	R42R55250[37]	R4066365	R4090096[72]	-	-	R458634[52]	R458634
R44141627[270]	2-7/8 "	R42R55250	R42R55250[37]	R4066365	R4090096[72]	-	-	R458634[52]	R458634
R44141628[269]	2-7/8 "	R42R55250	R42R55250[37]	R4066365	R4090096[72]	-	-	R458634[52]	R458634
R44141476[268]	3-3/8 "	R42R55099	R42R55098[37]	R4066780	R4090021[201]	N/A[53]	-	R458635	R458635
R44141858[275]	2-7/8 "	R42R55250	R42R55250[37]	R4066365	R4090096[72]	N/A[53]	-	R458635	R458635
23-123552-004[266]	2-7/8 "	R42R55250	R42R55250[37]	R4066365	R4090096[72]	N/A[53]	-	R458635	R458635
23-122701-002[269]	2-7/8 "	R42R55250	R42R55250[37]	R4066365	R4090096[72]	N/A[53]	-	R458632	R458632
23-122920-002[273]	2-19/32 "	R42R55314	R42R55314[37]	R40107771	R4090100P[72]	N/A[53]	-	R458632	R458632
23-123552-004[266]	2-7/8 "	R42R55250	R42R55250[37]	R4066365	R4090096[72]	N/A[53]	-	R458632	R458632
23-123572-004[271]	2-19/32 "	R42R55314	R42R55314[37]	R40107771	R4090100P[72]	N/A[53]	-	R458635	R458635
23-122527-002[272]	3-3/8 "	R42R55099	R42R55098[37]	R4066780	R4090021[201]	N/A[53]	-	R458635	R458635
23-123552-004[266]	2-7/8 "	R42R55250	R42R55250[37]	R4066365	R4090096[72]	N/A[53]	-	R458632	R458632
23-123572-004[271]	2-19/32 "	R42R55245	R42R55245[38]	R402235118	R402238231[201]	N/A[53]	-	R458635	R458635
23-122527-002[272]	2-19/32 "	R42R55245	R42R55245[38]	R402235118	R402238231[201]	N/A[53]	-	R458635	R458635
23-122920-002[273]	2-7/8 "	R42R55250	R42R55250[37]	R4066365	R4090096[72]	N/A[53]	-	R458635	R458635
23-123572-004[271]	3-3/8 "	R42R55099	R42R55098[37]	R4066780	R4090021[201]	N/A[53]	-	R458632	R458632
23-123572-004[271]	2-7/8 "	R42R55250	R42R55250[37]	R4066365	R4090096[72]	N/A[53]	-	R458632	R458632
R44141858[275]	3-3/8 "	R42R55099	R42R55098[37]	R4066780	R4090021[201]	N/A[53]	-	R458632	R458632
23-122527-002[272]	2-7/8 "	R42R55250	R42R55250[37]	R4066365	R4090096[72]	N/A[53]	-	R458635	R458635
23-122527-002[272]	2-7/8 "	R42R55250	R42R55250[37]	R4066365	R4090096[72]	N/A[53]	-	R458632	R458632
23-123552-004[266]	2-19/32 "	R42R55314	R42R55314[37]	R40107771	R4090100P[72]	N/A[53]	-	R458635	R458635
R44141858[275]	2-19/32 "	R42R55245	R42R55245[38]	R402235118	R402238231[201]	N/A[53]	-	R458632	R458632
23-123552-004[266]	2-19/32 "	R42R55245	R42R55245[38]	R402235118	R402238231[201]	N/A[53]	-	R458635	R458635
23-122527-002[272]	2-7/8 "	R42R55250	R42R55250[37]	R4066365	R4090096[72]	N/A[53]	-	R458632	R458632
23-122701-002[269]	2-7/8 "	R42R55250	R42R55250[37]	R4066365	R4090096[72]	N/A[53]	-	R458632	R458632
23-122527-002[272]	2-7/8 "	R42R55250	R42R55250[37]	R4066365	R4090096[72]	N/A[53]	-	R458635	R458635
23-122701-002[269]	2-19/32 "	R42R55314	R42R55314[37]	R40107771	R4090100P[72]	N/A[53]	-	R458635	R458635
R44141858[275]	3-3/8 "	R42R55099	R42R55098[37]	R4066780	R4090021[201]	N/A[53]	-	R458635	R458635
23-123552-004[266]	2-19/32 "	R42R55245	R42R55245[38]	R402235118	R402238231[201]	N/A[53]	-	R458632	R458632
23-122701-002[269]	2-7/8 "	R42R55250	R42R55250[37]	R4066365	R4090096[72]	N/A[53]	-	R458632	R458632
23-123552-004[266]	2-7/8 "	R42R55250	R42R55250[37]	R4066365	R4090096[72]	N/A[53]	-	R458635	R458635
R44141476[268]	2-7/8 "	R42R55250	R42R55250[37]	R4066365	R4090096[72]	N/A[53]	-	R458635	R458635
23-122701-002[269]	3-3/8 "	R42R55099	R42R55098[37]	R4066780	R4090021[201]	N/A[53]	-	R458632	R458632
23-122527-002[272]	2-7/8 "	R42R55250	R42R55250[37]	R4066365	R4090096[72]	N/A[53]	-	R458635	R458635
R44141858[275]	2-7/8 "	R42R55250	R42R55250[37]	R4066365	R4090096[72]	N/A[53]	-	R458635	R458635
23-122527-002[272]	2-7/8 "	R42R55250	R42R55250[37]	R4066365	R4090096[72]	N/A[53]	-	R458635	R458635
R44141858[275]	2-19/32 "	R42R55314	R42R55314[37]	R40107771	R4090100P[72]	N/A[53]	-	R458635	R458635
23-123572-004[271]	2-7/8 "	R42R55250	R42R55250[37]	R4066365	R4090096[72]	N/A[53]	-	R458632	R458632
23-122701-002[269]	3-3/8 "	R42R55099	R42R55098[37]	R4066780	R4090021[201]	N/A[53]	-	R458635	R458635
23-123572-004[271]	2-7/8 "	R42R55250	R42R55250[37]	R4066365	R4090096[72]	N/A[53]	-	R458632	R458632

269 - 5 Stud, U Shape

270 - 5 Stud, U Shape, .766 Dia. Studs

271 - 6 Stud, Hat Shape

272 - 6 Stud, U Shape

273 - 5 Stud, U Shape, .780 Dia. Studs

275 - 5 Stud, U Shape, .656 Dia. Studs

MAKE MODEL YEAR AXLE CODE AXLE WEIGHT	AXLE & BRK. TYPE	BRK. MFG.	BRAKE SIZE	FMSI	MERITOR DISC PAD OR BRAKE SHOE	MERITOR GUIDE PIN OR RETURN SPRING KIT	MERITOR CALIPER HWD. KIT OR RETURN SPRING KIT	MERITOR ADJUSTER KIT (LEFT WHEEL)	MERITOR ADJUSTER KIT (RIGHT WHEEL)
ITE(Cont.)									
190, 1900, 1910, 1950 SERIES CONVENTIONAL TILT CAB(Cont.)									
1987									
	Fd	BX		7108 - D184	MD184	R40H5010	R40H5519	NR	NR
	Fd	BX		7142 - D225	MD225	R40H5010	R40H5522	NR	NR
	Fd	BX		7142 - D225	MD225	R40H5010	R40H5522	NR	NR
	Fd	BX		7142 - D225	MD225	R40H5010	R40H5522	NR	NR
	Fd	BX		7142 - D225	MD225	R40H5010	R40H5522	NR	NR
	Fd	BX		7142 - D225	MD225	R40H5010	R40H5522	NR	NR
	Fd	BX		7142 - D225	MD225	R40H5010	R40H5522	NR	NR
	Fd	BX		7142 - D225	MD225	R40H5010	R40H5522	NR	NR
	Fd	BX		7142 - D225	MD225	R40H5010	R40H5522	NR	NR
	Fd	BX		7142 - D225	MD225	R40H5010	R40H5522	NR	NR
	Fd	BX		7108 - D184	MD184	R40H5010	R40H5519	NR	NR
	Fd	BX		7108 - D184	MD184	R40H5010	R40H5519	NR	NR
	Fd	BX		7142 - D225	MD225	R40H5010	R40H5522	NR	NR
	Fd	BX		7142 - D225	MD225	R40H5010	R40H5522	NR	NR
	Fd	BX		7108 - D184	MD184	R40H5010	R40H5519	NR	NR
	Fd	BX		7142 - D225	MD225	R40H5010	R40H5522	NR	NR
	Fd	BX		7108 - D184	MD184	R40H5010	R40H5519	NR	NR
	Fd	BX		7142 - D225	MD225	R40H5010	R40H5522	NR	NR
	Fd	BX		7108 - D184	MD184	R40H5010	R40H5519	NR	NR
	Fd	BX		7108 - D184	MD184	R40H5010	R40H5519	NR	NR
	Fd	BX		7142 - D225	MD225	R40H5010	R40H5522	NR	NR
	Fd	BX		7142 - D225	MD225	R40H5010	R40H5522	NR	NR
	Fd	BX		7108 - D184	MD184	R40H5010	R40H5519	NR	NR
	Fd	BX		7142 - D225	MD225	R40H5010	R40H5522	NR	NR
	Fd	BX		7142 - D225	MD225	R40H5010	R40H5522	NR	NR
	Fd	BX		7142 - D225	MD225	R40H5010	R40H5522	NR	NR
	Fd	BX		7108 - D184	MD184	R40H5010	R40H5519	NR	NR
	Fd	BX		7108 - D184	MD184	R40H5010	R40H5519	NR	NR
	Fd	BX		7108 - D184	MD184	R40H5010	R40H5519	NR	NR
	Fd	BX		7142 - D225	MD225	R40H5010	R40H5522	NR	NR
	Fd	BX		7108 - D184	MD184	R40H5010	R40H5519	NR	NR
	Fd	BX		7142 - D225	MD225	R40H5010	R40H5522	NR	NR
	Fd	BX		7142 - D225	MD225	R40H5010	R40H5522	NR	NR
	Fd	BX		7108 - D184	MD184	R40H5010	R40H5519	NR	NR
	Fd	BX		7108 - D184	MD184	R40H5010	R40H5519	NR	NR
	Fd	BX		7108 - D184	MD184	R40H5010	R40H5519	NR	NR
	Fd	BX		7142 - D225	MD225	R40H5010	R40H5522	NR	NR
	Fd	BX		7108 - D184	MD184	R40H5010	R40H5519	NR	NR
	Fd	BX		7142 - D225	MD225	R40H5010	R40H5522	NR	NR
	Fd	BX		7108 - D184	MD184	R40H5010	R40H5519	NR	NR
	Fd	BX		7108 - D184	MD184	R40H5010	R40H5519	NR	NR
	Fd	BX		7108 - D184	MD184	R40H5010	R40H5519	NR	NR
	Fd	BX		7108 - D184	MD184	R40H5010	R40H5519	NR	NR
	Fd	BX		7142 - D225	MD225	R40H5010	R40H5522	NR	NR
	Fd	BX		7108 - D184	MD184	R40H5010	R40H5519	NR	NR
	Fd	BX		7142 - D225	MD225	R40H5010	R40H5522	NR	NR
	Fd	BX		7142 - D225	MD225	R40H5010	R40H5522	NR	NR
	Fd	BX		7142 - D225	MD225	R40H5010	R40H5522	NR	NR
	Fd	BX		7142 - D225	MD225	R40H5010	R40H5522	NR	NR
	Fd	BX		7142 - D225	MD225	R40H5010	R40H5522	NR	NR
	Fd	BX		7142 - D225	MD225	R40H5010	R40H5522	NR	NR
S1910,S1950 Cargostar Cab Forward Code: 04237									
	Rd	BX		7108 - D184	MD184	R40H5010	R40H5519	NR	NR
	Rd	BX		7108 - D184	MD184	R40H5010	R40H5519	NR	NR
	Rd	BX		7108 - D184	MD184	R40H5010	R40H5519	NR	NR
	Rd	BX		7108 - D184	MD184	R40H5010	R40H5519	NR	NR
	Rd	BX		7108 - D184	MD184	R40H5010	R40H5519	NR	NR
	Rd	BX		7108 - D184	MD184	R40H5010	R40H5519	NR	NR
	Rd	BX		7108 - D184	MD184	R40H5010	R40H5519	NR	NR
	Rd	BX		7108 - D184	MD184	R40H5010	R40H5519	NR	NR
	Rd	BX		7108 - D184	MD184	R40H5010	R40H5519	NR	NR
	Rd	BX		7108 - D184	MD184	R40H5010	R40H5519	NR	NR
	Rd	BX		7108 - D184	MD184	R40H5010	R40H5519	NR	NR

37 - Also available as a New unit

38 - First design, may have external joining tube and uses steel pistons

52 - 18" Length

53 - Power Brakes

72 - Phenolic/Steel Face

201 - Steel Piston

266 - 10 Stud, Hat Shaped

267 - 10 Stud, U Shaped

268 - 5 Stud, Hat Shape

MERITOR DRUM OR ROTOR NO.	CALIPER OR CYLINDER BORE SIZE	MERITOR CALIPER OR WHEEL CYLINDER (LEFT)	MERITOR CALIPER OR WHEEL CYLINDER (RIGHT)	MERITOR CALIPER OR WHEEL CYLINDER REPAIR KIT	MERITOR CALIPER PISTON	MERITOR MASTER CYLINDER	MERITOR MASTER CYLINDER KIT	MERITOR BRAKE HOSE (LEFT)	MERITOR BRAKE HOSE (RIGHT)
									ITE(Cont.)
190, 1900, 1910, 1950 SERIES CONVENTIONAL TILT CAB(Cont.)									
R44141858[275]	2-19/32 "	R42R55245	R42R55245[38]	R402235118	R402238231[201]	N/A[53]	-	R458635	R458635
R44141476[268]	2-7/8 "	R42R55250	R42R55250[37]	R4066365	R4090096[72]	N/A[53]	-	R458635	R458635
R44141476[268]	2-7/8 "	R42R55250	R42R55250[37]	R4066365	R4090096[72]	N/A[53]	-	R458635	R458635
23-123572-004[271]	2-7/8 "	R42R55250	R42R55250[37]	R4066365	R4090096[72]	N/A[53]	-	R458635	R458635
R44141858[275]	2-7/8 "	R42R55250	R42R55250[37]	R4066365	R4090096[72]	N/A[53]	-	R458635	R458635
23-122920-002[273]	2-7/8 "	R42R55250	R42R55250[37]	R4066365	R4090096[72]	N/A[53]	-	R458632	R458632
23-122527-002[272]	2-7/8 "	R42R55250	R42R55250[37]	R4066365	R4090096[72]	N/A[53]	-	R458632	R458632
23-123572-004[271]	2-7/8 "	R42R55250	R42R55250[37]	R4066365	R4090096[72]	N/A[53]	-	R458635	R458635
23-122920-002[273]	2-7/8 "	R42R55250	R42R55250[37]	R4066365	R4090096[72]	N/A[53]	-	R458632	R458632
23-122527-002[272]	2-19/32 "	R42R55314	R42R55314[37]	R40107771	R4090100P[72]	N/A[53]	-	R458632	R458632
23-122920-002[273]	3-3/8 "	R42R55099	R42R55098[37]	R4066780	R4090021[201]	N/A[53]	-	R458632	R458632
23-123572-004[271]	2-7/8 "	R42R55250	R42R55250[37]	R4066365	R4090096[72]	N/A[53]	-	R458635	R458635
23-122701-002[269]	2-7/8 "	R42R55250	R42R55250[37]	R4066365	R4090096[72]	N/A[53]	-	R458635	R458635
23-122920-002[273]	2-19/32 "	R42R55314	R42R55314[37]	R40107771	R4090100P[72]	N/A[53]	-	R458635	R458635
R44141858[275]	2-7/8 "	R42R55250	R42R55250[37]	R4066365	R4090096[72]	N/A[53]	-	R458632	R458632
R44141476[268]	2-19/32 "	R42R55314	R42R55314[37]	R40107771	R4090100P[72]	N/A[53]	-	R458635	R458635
R44141476[268]	2-7/8 "	R42R55250	R42R55250[37]	R4066365	R4090096[72]	N/A[53]	-	R458632	R458632
23-122527-002[272]	2-19/32 "	R42R55245	R42R55245[38]	R402235118	R402238231[201]	N/A[53]	-	R458632	R458632
R44141858[275]	2-19/32 "	R42R55314	R42R55314[37]	R40107771	R4090100P[72]	N/A[53]	-	R458632	R458632
23-123572-004[271]	2-7/8 "	R42R55250	R42R55250[37]	R4066365	R4090096[72]	N/A[53]	-	R458635	R458635
R44141476[268]	2-7/8 "	R42R55250	R42R55250[37]	R4066365	R4090096[72]	N/A[53]	-	R458632	R458632
23-123572-004[271]	3-3/8 "	R42R55099	R42R55098[37]	R4066780	R4090021[201]	N/A[53]	-	R458635	R458635
23-123552-004[266]	2-7/8 "	R42R55250	R42R55250[37]	R4066365	R4090096[72]	N/A[53]	-	R458632	R458632
R44141858[275]	2-7/8 "	R42R55250	R42R55250[37]	R4066365	R4090096[72]	N/A[53]	-	R458632	R458632
23-123572-004[271]	2-7/8 "	R42R55250	R42R55250[37]	R4066365	R4090096[72]	N/A[53]	-	R458632	R458632
23-123572-004[271]	2-19/32 "	R42R55245	R42R55245[38]	R402235118	R402238231[201]	N/A[53]	-	R458632	R458632
23-123552-004[266]	3-3/8 "	R42R55099	R42R55098[37]	R4066780	R4090021[201]	N/A[53]	-	R458635	R458635
R44141476[268]	3-3/8 "	R42R55099	R42R55098[37]	R4066780	R4090021[201]	N/A[53]	-	R458632	R458632
23-122920-002[273]	2-7/8 "	R42R55250	R42R55250[37]	R4066365	R4090096[72]	N/A[53]	-	R458632	R458632
23-122920-002[273]	3-3/8 "	R42R55099	R42R55098[37]	R4066780	R4090021[201]	N/A[53]	-	R458635	R458635
R44141858[275]	2-7/8 "	R42R55250	R42R55250[37]	R4066365	R4090096[72]	N/A[53]	-	R458635	R458635
23-122527-002[272]	2-7/8 "	R42R55250	R42R55250[37]	R4066365	R4090096[72]	N/A[53]	-	R458632	R458632
R44141476[268]	2-19/32 "	R42R55245	R42R55245[38]	R402235118	R402238231[201]	N/A[53]	-	R458632	R458632
23-123552-004[266]	3-3/8 "	R42R55099	R42R55098[37]	R4066780	R4090021[201]	N/A[53]	-	R458632	R458632
23-123572-004[271]	2-19/32 "	R42R55314	R42R55314[37]	R40107771	R4090100P[72]	N/A[53]	-	R458632	R458632
R44141476[268]	2-7/8 "	R42R55250	R42R55250[37]	R4066365	R4090096[72]	N/A[53]	-	R458632	R458632
R44141476[268]	2-19/32 "	R42R55245	R42R55245[38]	R402235118	R402238231[201]	N/A[53]	-	R458635	R458635
23-123552-004[266]	2-7/8 "	R42R55250	R42R55250[37]	R4066365	R4090096[72]	N/A[53]	-	R458635	R458635
23-122701-002[269]	2-19/32 "	R42R55314	R42R55314[37]	R40107771	R4090100P[72]	N/A[53]	-	R458632	R458632
23-122527-002[272]	2-19/32 "	R42R55314	R42R55314[37]	R40107771	R4090100P[72]	N/A[53]	-	R458635	R458635
R44141476[268]	2-19/32 "	R42R55314	R42R55314[37]	R40107771	R4090100P[72]	N/A[53]	-	R458632	R458632
23-123552-004[266]	2-19/32 "	R42R55314	R42R55314[37]	R40107771	R4090100P[72]	N/A[53]	-	R458632	R458632
23-122701-002[269]	2-7/8 "	R42R55250	R42R55250[37]	R4066365	R4090096[72]	N/A[53]	-	R458635	R458635
23-122527-002[272]	3-3/8 "	R42R55099	R42R55098[37]	R4066780	R4090021[201]	N/A[53]	-	R458632	R458632
23-123552-004[266]	2-7/8 "	R42R55250	R42R55250[37]	R4066365	R4090096[72]	N/A[53]	-	R458635	R458635
23-122920-002[273]	2-7/8 "	R42R55250	R42R55250[37]	R4066365	R4090096[72]	N/A[53]	-	R458635	R458635
R44141858[275]	2-7/8 "	R42R55250	R42R55250[37]	R4066365	R4090096[72]	N/A[53]	-	R458632	R458632
23-122920-002[273]	2-7/8 "	R42R55250	R42R55250[37]	R4066365	R4090096[72]	N/A[53]	-	R458635	R458635
R44141858[275]	2-7/8 "	R42R55250	R42R55250[37]	R4066365	R4090096[72]	N/A[53]	-	R458632	R458632
23-122701-002[269]	2-7/8 "	R42R55250	R42R55250[37]	R4066365	R4090096[72]	N/A[53]	-	R458635	R458635
23-123552-004[266]	2-7/8 "	R42R55250	R42R55250[37]	R4066365	R4090096[72]	N/A[53]	-	R458632	R458632
R44141628[269]	2-19/32 "	R42R55245	R42R55245[38]	R402235118	R402238231[201]	-	-	R458634[52]	R458634
R44141627[270]	2-19/32 "	R42R55245	R42R55245[38]	R40107771	R4090100P[201]	-	-	R458634[52]	R458634
R44141629[269]	2-19/32 "	R42R55245	R42R55245[38]	R40107771	R4090100P[201]	-	-	R458634[52]	R458634
23-123572-004[271]	2-19/32 "	R42R55245	R42R55245[38]	R40107771	R4090100P[201]	-	-	R458634[52]	R458634
R44141628[269]	2-19/32 "	R42R55245	R42R55245[38]	R40107771	R4090100P[201]	-	-	R458634[52]	R458634
23-123572-004[271]	2-19/32 "	R42R55245	R42R55245[38]	R402235118	R402238231[201]	-	-	R458634[52]	R458634
23-123552-004[266]	2-19/32 "	R42R55245	R42R55245[38]	R402235118	R402238231[201]	-	-	R458634[52]	R458634
23-122527-002[272]	2-19/32 "	R42R55245	R42R55245[38]	R402235118	R402238231[201]	-	-	R458634[52]	R458634
R44141608[267]	2-19/32 "	R42R55245	R42R55245[38]	R402235118	R402238231[201]	-	-	R458634[52]	R458634
23-122527-002[272]	2-19/32 "	R42R55314	R42R55314[37]	R40107771	R4090100P[72]	-	-	R458634[52]	R458634
R44141629[269]	2-19/32 "	R42R55245	R42R55245[38]	R402235118	R402238231[201]	-	-	R458634[52]	R458634

269 - 5 Stud, U Shape

270 - 5 Stud, U Shape, .766 Dia. Studs

271 - 6 Stud, Hat Shape

272 - 6 Stud, U Shape

273 - 5 Stud, U Shape, .780 Dia. Studs

275 - 5 Stud, U Shape, .656 Dia. Studs

MAKE MODEL YEAR AXLE CODE AXLE WEIGHT	AXLE & BRK. TYPE	BRK. MFG.	BRAKE SIZE	FMSI	MERITOR DISC PAD OR BRAKE SHOE	MERITOR GUIDE PIN OR RETURN SPRING KIT	MERITOR CALIPER HWD. KIT OR RETURN SPRING KIT	MERITOR ADJUSTER KIT (LEFT WHEEL)	MERITOR ADJUSTER KIT (RIGHT WHEEL)
ITE(Cont.)									
190, 1900, 1910, 1950 SERIES CONVENTIONAL TILT CAB(Cont.)									
1987 S1910,S1950 Cargostar Cab Forward Code: 04237	Rd	BX		7108 - D184	MD184	R40H5010	R40H5519	NR	NR
	Rd	BX		7108 - D184	MD184	R40H5010	R40H5519	NR	NR
	Rd	BX		7108 - D184	MD184	R40H5010	R40H5519	NR	NR
S1910,S1950 Cargostar Cab Forward Code: 04238	Rd	BX		7142 - D225	MD225	R40H5010	R40H5522	NR	NR
	Rd	BX		7142 - D225	MD225	R40H5010	R40H5522	NR	NR
	Rd	BX		7142 - D225	MD225	R40H5010	R40H5522	NR	NR
	Rd	BX		7142 - D225	MD225	R40H5010	R40H5522	NR	NR
	Rd	BX		7142 - D225	MD225	R40H5010	R40H5522	NR	NR
	Rd	BX		7142 - D225	MD225	R40H5010	R40H5522	NR	NR
	Rd	BX		7142 - D225	MD225	R40H5010	R40H5522	NR	NR
	Rd	BX		7142 - D225	MD225	R40H5010	R40H5522	NR	NR
	Rd	BX		7142 - D225	MD225	R40H5010	R40H5522	NR	NR
	Rd	BX		7142 - D225	MD225	R40H5010	R40H5522	NR	NR
	Rd	BX		7142 - D225	MD225	R40H5010	R40H5522	NR	NR
	Rd	BX		7142 - D225	MD225	R40H5010	R40H5522	NR	NR
	Rd	BX		7142 - D225	MD225	R40H5010	R40H5522	NR	NR
	Rd	BX		7142 - D225	MD225	R40H5010	R40H5522	NR	NR
	Rd	BX		7142 - D225	MD225	R40H5010	R40H5522	NR	NR
	Rd	BX		7142 - D225	MD225	R40H5010	R40H5522	NR	NR
	Rd	BX		7142 - D225	MD225	R40H5010	R40H5522	NR	NR
	Rd	BX		7142 - D225	MD225	R40H5010	R40H5522	NR	NR
	Rd	BX		7142 - D225	MD225	R40H5010	R40H5522	NR	NR
	Rd	BX		7142 - D225	MD225	R40H5010	R40H5522	NR	NR
	Rd	BX		7142 - D225	MD225	R40H5010	R40H5522	NR	NR
	Rd	BX		7142 - D225	MD225	R40H5010	R40H5522	NR	NR
	Rd	BX		7142 - D225	MD225	R40H5010	R40H5522	NR	NR
	Rd	BX		7142 - D225	MD225	R40H5010	R40H5522	NR	NR
	Rd	BX		7142 - D225	MD225	R40H5010	R40H5522	NR	NR
	Rd	BX		7142 - D225	MD225	R40H5010	R40H5522	NR	NR
	Rd	BX		7142 - D225	MD225	R40H5010	R40H5522	NR	NR
1986 S1910,S1950 Cargostar Cab Forward Code: 04145	Fd	BX		7142 - D225	MD225	R40H5010	R40H5522	NR	NR
	Fd	BX		7142 - D225	MD225	R40H5010	R40H5522	NR	NR
	Fd	BX		7142 - D225	MD225	R40H5010	R40H5522	NR	NR
	Fd	BX		7142 - D225	MD225	R40H5010	R40H5522	NR	NR
	Fd	BX		7142 - D225	MD225	R40H5010	R40H5522	NR	NR
	Fd	BX		7108 - D184	MD184	R40H5010	R40H5519	NR	NR
	Fd	BX		7142 - D225	MD225	R40H5010	R40H5522	NR	NR
	Fd	BX		7108 - D184	MD184	R40H5010	R40H5519	NR	NR
	Fd	BX		7108 - D184	MD184	R40H5010	R40H5519	NR	NR
	Fd	BX		7108 - D184	MD184	R40H5010	R40H5519	NR	NR
	Fd	BX		7108 - D184	MD184	R40H5010	R40H5519	NR	NR
	Fd	BX		7108 - D184	MD184	R40H5010	R40H5519	NR	NR
	Fd	BX		7142 - D225	MD225	R40H5010	R40H5522	NR	NR
	Fd	BX		7108 - D184	MD184	R40H5010	R40H5519	NR	NR
	Fd	BX		7142 - D225	MD225	R40H5010	R40H5522	NR	NR
	Fd	BX		7108 - D184	MD184	R40H5010	R40H5519	NR	NR
	Fd	BX		7142 - D225	MD225	R40H5010	R40H5522	NR	NR
	Fd	BX		7108 - D184	MD184	R40H5010	R40H5519	NR	NR
	Fd	BX		7142 - D225	MD225	R40H5010	R40H5522	NR	NR
	Fd	BX		7142 - D225	MD225	R40H5010	R40H5522	NR	NR
	Fd	BX		7108 - D184	MD184	R40H5010	R40H5519	NR	NR
	Fd	BX		7142 - D225	MD225	R40H5010	R40H5522	NR	NR
	Fd	BX		7142 - D225	MD225	R40H5010	R40H5522	NR	NR
	Fd	BX		7108 - D184	MD184	R40H5010	R40H5519	NR	NR

37 - Also available as a New unit

38 - First design, may have external joining tube and uses steel pistons

52 - 18" Length

53 - Power Brakes

72 - Phenolic/Steel Face

201 - Steel Piston

266 - 10 Stud, Hat Shaped

267 - 10 Stud, U Shaped

268 - 5 Stud, Hat Shape

MERITOR DRUM OR ROTOR NO.	CALIPER OR CYLINDER BORE SIZE	MERITOR CALIPER OR WHEEL CYLINDER (LEFT)	MERITOR CALIPER OR WHEEL CYLINDER (RIGHT)	MERITOR CALIPER OR WHEEL CYLINDER REPAIR KIT	MERITOR CALIPER PISTON	MERITOR MASTER CYLINDER	MERITOR MASTER CYLINDER KIT	MERITOR BRAKE HOSE (LEFT)	MERITOR BRAKE HOSE (RIGHT)
									ITE(Cont.)
					190, 1900, 1910, 1950 SERIES CONVENTIONAL TILT CAB(Cont.)				
23-123552-004[266]	2-19/32 "	R42R55245	R42R55245[38]	R40107771	R4090100P[201]	-	-	R458634[52]	R458634
R44141627[270]	2-19/32 "	R42R55245	R42R55245[38]	R402235118	R402238231[201]	-	-	R458634[52]	R458634
R44141608[267]	2-19/32 "	R42R55245	R42R55245[38]	R40107771	R4090100P[201]	-	-	R458634[52]	R458634
23-122527-002[272]	2-7/8 "	R42R55250	R42R55250[37]	R4066365	R4090096[72]	-	-	R458634[52]	R458634
R44141628[269]	2-7/8 "	R42R55250	R42R55250[37]	R4066365	R4090096[72]	-	-	R458634[52]	R458634
23-123552-004[266]	2-7/8 "	R42R55250	R42R55250[37]	R4066365	R4090096[72]	-	-	R458634[52]	R458634
R44141627[270]	2-7/8 "	R42R55250	R42R55250[37]	R4066365	R4090096[72]	-	-	R458634[52]	R458634
23-122527-002[272]	2-7/8 "	R42R55250	R42R55250[37]	R4066365	R4090096[72]	-	-	R458634[52]	R458634
23-122527-002[272]	2-7/8 "	R42R55250	R42R55250[37]	R4066365	R4090096[72]	-	-	R458634[52]	R458634
R44141628[269]	2-7/8 "	R42R55250	R42R55250[37]	R4066365	R4090096[72]	-	-	R458634[52]	R458634
23-123552-004[266]	2-7/8 "	R42R55250	R42R55250[37]	R4066365	R4090096[72]	-	-	R458634[52]	R458634
R44141629[269]	2-7/8 "	R42R55250	R42R55250[37]	R4066365	R4090096[72]	-	-	R458634[52]	R458634
23-122527-002[272]	2-7/8 "	R42R55250	R42R55250[37]	R4066365	R4090096[72]	-	-	R458634[52]	R458634
R44141629[269]	2-7/8 "	R42R55250	R42R55250[37]	R4066365	R4090096[72]	-	-	R458634[52]	R458634
23-123572-004[271]	2-7/8 "	R42R55250	R42R55250[37]	R4066365	R4090096[72]	-	-	R458634[52]	R458634
23-123572-004[271]	2-7/8 "	R42R55250	R42R55250[37]	R4066365	R4090096[72]	-	-	R458634[52]	R458634
R44141628[269]	2-7/8 "	R42R55250	R42R55250[37]	R4066365	R4090096[72]	-	-	R458634[52]	R458634
R44141608[267]	2-7/8 "	R42R55250	R42R55250[37]	R4066365	R4090096[72]	-	-	R458634[52]	R458634
R44141628[269]	2-7/8 "	R42R55250	R42R55250[37]	R4066365	R4090096[72]	-	-	R458634[52]	R458634
R44141629[269]	2-7/8 "	R42R55250	R42R55250[37]	R4066365	R4090096[72]	-	-	R458634[52]	R458634
R44141608[267]	2-7/8 "	R42R55250	R42R55250[37]	R4066365	R4090096[72]	-	-	R458634[52]	R458634
23-123552-004[266]	2-7/8 "	R42R55250	R42R55250[37]	R4066365	R4090096[72]	-	-	R458634[52]	R458634
R44141627[270]	2-7/8 "	R42R55250	R42R55250[37]	R4066365	R4090096[72]	-	-	R458634[52]	R458634
R44141629[269]	2-7/8 "	R42R55250	R42R55250[37]	R4066365	R4090096[72]	-	-	R458634[52]	R458634
R44141627[270]	2-7/8 "	R42R55250	R42R55250[37]	R4066365	R4090096[72]	-	-	R458634[52]	R458634
R44141608[267]	2-7/8 "	R42R55250	R42R55250[37]	R4066365	R4090096[72]	-	-	R458634[52]	R458634
R44141608[267]	2-7/8 "	R42R55250	R42R55250[37]	R4066365	R4090096[72]	-	-	R458634[52]	R458634
23-123552-004[266]	2-7/8 "	R42R55250	R42R55250[37]	R4066365	R4090096[72]	-	-	R458634[52]	R458634
23-123572-004[271]	2-7/8 "	R42R55250	R42R55250[37]	R4066365	R4090096[72]	-	-	R458634[52]	R458634
R44141627[270]	2-7/8 "	R42R55250	R42R55250[37]	R4066365	R4090096[72]	-	-	R458634[52]	R458634
R44141476[268]	2-7/8 "	R42R55250	R42R55250[37]	R4066365	R4090096[72]	N/A[53]	-	R458632	R458632
23-123552-004[266]	2-7/8 "	R42R55250	R42R55250[37]	R4066365	R4090096[72]	N/A[53]	-	R458635	R458635
23-123572-004[271]	2-7/8 "	R42R55250	R42R55250[37]	R4066365	R4090096[72]	N/A[53]	-	R458632	R458632
23-122527-002[272]	2-7/8 "	R42R55250	R42R55250[37]	R4066365	R4090096[72]	N/A[53]	-	R458635	R458635
23-122701-002[269]	2-7/8 "	R42R55250	R42R55250[37]	R4066365	R4090096[72]	N/A[53]	-	R458632	R458632
R44141476[268]	3-3/8 "	R42R55099	R42R55098[37]	R4066780	R4090021[201]	N/A[53]	-	R458635	R458635
R44141476[268]	2-7/8 "	R42R55250	R42R55250[37]	R4066365	R4090096[72]	N/A[53]	-	R458632	R458632
23-122920-002[273]	3-3/8 "	R42R55099	R42R55098[37]	R4066780	R4090021[201]	N/A[53]	-	R458635	R458635
23-123572-004[271]	2-19/32 "	R42R55314	R42R55314[37]	R40107771	R4090100P[72]	N/A[53]	-	R458632	R458632
23-123552-004[266]	2-19/32 "	R42R55314	R42R55314[37]	R40107771	R4090100P[72]	N/A[53]	-	R458635	R458635
R44141476[268]	2-19/32 "	R42R55245	R42R55245[38]	R402235118	R402238231[201]	N/A[53]	-	R458635	R458635
23-123552-004[266]	3-3/8 "	R42R55099	R42R55098[37]	R4066780	R4090021[201]	N/A[53]	-	R458635	R458635
23-122920-002[273]	2-7/8 "	R42R55250	R42R55250[37]	R4066365	R4090096[72]	N/A[53]	-	R458635	R458635
R44141858[275]	2-19/32 "	R42R55314	R42R55314[37]	R40107771	R4090100P[72]	N/A[53]	-	R458635	R458635
23-123552-004[266]	2-7/8 "	R42R55250	R42R55250[37]	R4066365	R4090096[72]	N/A[53]	-	R458635	R458635
23-123572-004[271]	3-3/8 "	R42R55099	R42R55098[37]	R4066780	R4090021[201]	N/A[53]	-	R458632	R458632
23-123572-004[271]	2-7/8 "	R42R55250	R42R55250[37]	R4066365	R4090096[72]	N/A[53]	-	R458632	R458632
23-122701-002[269]	2-19/32 "	R42R55314	R42R55314[37]	R40107771	R4090100P[72]	N/A[53]	-	R458632	R458632
R44141476[268]	2-7/8 "	R42R55250	R42R55250[37]	R4066365	R4090096[72]	N/A[53]	-	R458635	R458635
23-122527-002[272]	2-19/32 "	R42R55245	R42R55245[38]	R402235118	R402238231[201]	N/A[53]	-	R458635	R458635
23-122527-002[272]	2-7/8 "	R42R55250	R42R55250[37]	R4066365	R4090096[72]	N/A[53]	-	R458632	R458632
R44141858[275]	2-7/8 "	R42R55250	R42R55250[37]	R4066365	R4090096[72]	N/A[53]	-	R458632	R458632
23-123572-004[271]	2-19/32 "	R42R55245	R42R55245[38]	R402235118	R402238231[201]	N/A[53]	-	R458632	R458632
23-122527-002[272]	2-7/8 "	R42R55250	R42R55250[37]	R4066365	R4090096[72]	N/A[53]	-	R458635	R458635
23-122920-002[273]	2-7/8 "	R42R55250	R42R55250[37]	R4066365	R4090096[72]	N/A[53]	-	R458635	R458635
R44141476[268]	2-19/32 "	R42R55314	R42R55314[37]	R40107771	R4090100P[72]	N/A[53]	-	R458635	R458635
23-123572-004[271]	2-7/8 "	R42R55250	R42R55250[37]	R4066365	R4090096[72]	N/A[53]	-	R458632	R458632

269 - 5 Stud, U Shape

270 - 5 Stud, U Shape, .766 Dia. Studs

271 - 6 Stud, Hat Shape

272 - 6 Stud, U Shape

273 - 5 Stud, U Shape, .780 Dia. Studs

275 - 5 Stud, U Shape, .656 Dia. Studs

MAKE MODEL YEAR AXLE CODE AXLE WEIGHT	AXLE & BRK. TYPE	BRK. MFG.	BRAKE SIZE	FMSI	MERITOR DISC PAD OR BRAKE SHOE	MERITOR GUIDE PIN OR RETURN SPRING KIT	MERITOR CALIPER HWD. KIT OR RETURN SPRING KIT	MERITOR ADJUSTER KIT (LEFT WHEEL)	MERITOR ADJUSTER KIT (RIGHT WHEEL)
ITE(Cont.)									
190, 1900, 1910, 1950 SERIES CONVENTIONAL TILT CAB(Cont.)									
1986									
	Fd	BX		7142 - D225	MD225	R40H5010	R40H5522	NR	NR
	Fd	BX		7142 - D225	MD225	R40H5010	R40H5522	NR	NR
	Fd	BX		7108 - D184	MD184	R40H5010	R40H5519	NR	NR
	Fd	BX		7108 - D184	MD184	R40H5010	R40H5519	NR	NR
	Fd	BX		7108 - D184	MD184	R40H5010	R40H5519	NR	NR
	Fd	BX		7108 - D184	MD184	R40H5010	R40H5519	NR	NR
	Fd	BX		7108 - D184	MD184	R40H5010	R40H5519	NR	NR
	Fd	BX		7142 - D225	MD225	R40H5010	R40H5522	NR	NR
	Fd	BX		7142 - D225	MD225	R40H5010	R40H5522	NR	NR
	Fd	BX		7108 - D184	MD184	R40H5010	R40H5519	NR	NR
	Fd	BX		7142 - D225	MD225	R40H5010	R40H5522	NR	NR
	Fd	BX		7142 - D225	MD225	R40H5010	R40H5522	NR	NR
	Fd	BX		7142 - D225	MD225	R40H5010	R40H5522	NR	NR
	Fd	BX		7108 - D184	MD184	R40H5010	R40H5519	NR	NR
	Fd	BX		7142 - D225	MD225	R40H5010	R40H5522	NR	NR
	Fd	BX		7142 - D225	MD225	R40H5010	R40H5522	NR	NR
	Fd	BX		7142 - D225	MD225	R40H5010	R40H5522	NR	NR
	Fd	BX		7108 - D184	MD184	R40H5010	R40H5519	NR	NR
	Fd	BX		7142 - D225	MD225	R40H5010	R40H5522	NR	NR
	Fd	BX		7108 - D184	MD184	R40H5010	R40H5519	NR	NR
	Fd	BX		7108 - D184	MD184	R40H5010	R40H5519	NR	NR
	Fd	BX		7142 - D225	MD225	R40H5010	R40H5522	NR	NR
	Fd	BX		7142 - D225	MD225	R40H5010	R40H5522	NR	NR
	Fd	BX		7108 - D184	MD184	R40H5010	R40H5519	NR	NR
	Fd	BX		7108 - D184	MD184	R40H5010	R40H5519	NR	NR
	Fd	BX		7142 - D225	MD225	R40H5010	R40H5522	NR	NR
	Fd	BX		7142 - D225	MD225	R40H5010	R40H5522	NR	NR
	Fd	BX		7108 - D184	MD184	R40H5010	R40H5519	NR	NR
	Fd	BX		7142 - D225	MD225	R40H5010	R40H5522	NR	NR
	Fd	BX		7108 - D184	MD184	R40H5010	R40H5519	NR	NR
	Fd	BX		7108 - D184	MD184	R40H5010	R40H5519	NR	NR
	Fd	BX		7142 - D225	MD225	R40H5010	R40H5522	NR	NR
	Fd	BX		7142 - D225	MD225	R40H5010	R40H5522	NR	NR
	Fd	BX		7108 - D184	MD184	R40H5010	R40H5519	NR	NR
	Fd	BX		7108 - D184	MD184	R40H5010	R40H5519	NR	NR
	Fd	BX		7142 - D225	MD225	R40H5010	R40H5522	NR	NR
	Fd	BX		7142 - D225	MD225	R40H5010	R40H5522	NR	NR
	Fd	BX		7108 - D184	MD184	R40H5010	R40H5519	NR	NR
	Fd	BX		7108 - D184	MD184	R40H5010	R40H5519	NR	NR
	Fd	BX		7142 - D225	MD225	R40H5010	R40H5522	NR	NR
	Fd	BX		7142 - D225	MD225	R40H5010	R40H5522	NR	NR
	Fd	BX		7108 - D184	MD184	R40H5010	R40H5519	NR	NR
	Fd	BX		7142 - D225	MD225	R40H5010	R40H5522	NR	NR
	Fd	BX		7142 - D225	MD225	R40H5010	R40H5522	NR	NR
	Fd	BX		7108 - D184	MD184	R40H5010	R40H5519	NR	NR
	Fd	BX		7142 - D225	MD225	R40H5010	R40H5522	NR	NR
	Fd	BX		7142 - D225	MD225	R40H5010	R40H5522	NR	NR
	Fd	BX		7108 - D184	MD184	R40H5010	R40H5519	NR	NR
	Fd	BX		7142 - D225	MD225	R40H5010	R40H5522	NR	NR
	Fd	BX		7142 - D225	MD225	R40H5010	R40H5522	NR	NR
	Fd	BX		7108 - D184	MD184	R40H5010	R40H5519	NR	NR
	Fd	BX		7108 - D184	MD184	R40H5010	R40H5519	NR	NR
	Fd	BX		7142 - D225	MD225	R40H5010	R40H5522	NR	NR
	Fd	BX		7142 - D225	MD225	R40H5010	R40H5522	NR	NR
	Fd	BX		7108 - D184	MD184	R40H5010	R40H5519	NR	NR
	Fd	BX		7142 - D225	MD225	R40H5010	R40H5522	NR	NR
	Fd	BX		7142 - D225	MD225	R40H5010	R40H5522	NR	NR
S1910,S1950 Cargostar Cab Forward Code: 04237	Rd	BX		7108 - D184	MD184	R40H5010	R40H5519	NR	NR

37 - Also available as a New unit

38 - First design, may have external joining tube and uses steel pistons

52 - 18" Length

53 - Power Brakes

72 - Phenolic/Steel Face

201 - Steel Piston

266 - 10 Stud, Hat Shaped

268 - 5 Stud, Hat Shape

269 - 5 Stud, U Shape

MERITOR DRUM OR ROTOR NO.	CALIPER OR CYLINDER BORE SIZE	MERITOR CALIPER OR WHEEL CYLINDER (LEFT)	MERITOR CALIPER OR WHEEL CYLINDER (RIGHT)	MERITOR CALIPER OR WHEEL CYLINDER REPAIR KIT	MERITOR CALIPER PISTON	MERITOR MASTER CYLINDER	MERITOR MASTER CYLINDER KIT	MERITOR BRAKE HOSE (LEFT)	MERITOR BRAKE HOSE (RIGHT)
									ITE(Cont.)
190, 1900, 1910, 1950 SERIES CONVENTIONAL TILT CAB(Cont.)									
R44141858[275]	2-7/8 "	R42R55250	R42R55250[37]	R4066365	R4090096[72]	N/A[53]	-	R458632	R458632
23-122920-002[273]	2-7/8 "	R42R55250	R42R55250[37]	R4066365	R4090096[72]	N/A[53]	-	R458635	R458635
23-122527-002[272]	2-19/32 "	R42R55314	R42R55314[37]	R40107771	R4090100P[72]	N/A[53]	-	R458635	R458635
R44141858[275]	3-3/8 "	R42R55099	R42R55098[37]	R4066780	R4090021[201]	N/A[53]	-	R458632	R458632
R44141858[275]	2-19/32 "	R42R55245	R42R55245[38]	R402235118	R402238231[201]	N/A[53]	-	R458632	R458632
23-122527-002[272]	3-3/8 "	R42R55099	R42R55098[37]	R4066780	R4090021[201]	N/A[53]	-	R458632	R458632
R44141476[268]	2-19/32 "	R42R55245	R42R55245[38]	R402235118	R402238231[201]	N/A[53]	-	R458632	R458632
23-122527-002[272]	2-7/8 "	R42R55250	R42R55250[37]	R4066365	R4090096[72]	N/A[53]	-	R458632	R458632
23-122920-002[273]	2-7/8 "	R42R55250	R42R55250[37]	R4066365	R4090096[72]	N/A[53]	-	R458632	R458632
23-123552-004[266]	2-19/32 "	R42R55245	R42R55245[38]	R402235118	R402238231[201]	N/A[53]	-	R458635	R458635
23-122701-002[269]	2-7/8 "	R42R55250	R42R55250[37]	R4066365	R4090096[72]	N/A[53]	-	R458635	R458635
R44141858[275]	2-7/8 "	R42R55250	R42R55250[37]	R4066365	R4090096[72]	N/A[53]	-	R458632	R458632
23-123572-004[271]	2-7/8 "	R42R55250	R42R55250[37]	R4066365	R4090096[72]	N/A[53]	-	R458635	R458635
R44141476[268]	3-3/8 "	R42R55099	R42R55098[37]	R4066780	R4090021[201]	N/A[53]	-	R458632	R458632
23-123572-004[271]	2-7/8 "	R42R55250	R42R55250[37]	R4066365	R4090096[72]	N/A[53]	-	R458635	R458635
23-122920-002[273]	2-7/8 "	R42R55250	R42R55250[37]	R4066365	R4090096[72]	N/A[53]	-	R458632	R458632
23-122527-002[272]	2-7/8 "	R42R55250	R42R55250[37]	R4066365	R4090096[72]	N/A[53]	-	R458632	R458632
23-123552-004[266]	3-3/8 "	R42R55099	R42R55098[37]	R4066780	R4090021[201]	N/A[53]	-	R458632	R458632
23-123552-004[266]	2-7/8 "	R42R55250	R42R55250[37]	R4066365	R4090096[72]	N/A[53]	-	R458632	R458632
R44141858[275]	2-19/32 "	R42R55314	R42R55314[37]	R40107771	R4090100P[72]	N/A[53]	-	R458632	R458632
23-122527-002[272]	2-19/32 "	R42R55245	R42R55245[38]	R402235118	R402238231[201]	N/A[53]	-	R458632	R458632
R44141858[275]	2-7/8 "	R42R55250	R42R55250[37]	R4066365	R4090096[72]	N/A[53]	-	R458632	R458632
23-122701-002[269]	2-7/8 "	R42R55250	R42R55250[37]	R4066365	R4090096[72]	N/A[53]	-	R458635	R458635
23-122701-002[269]	3-3/8 "	R42R55099	R42R55098[37]	R4066780	R4090021[201]	N/A[53]	-	R458635	R458635
23-122920-002[273]	2-19/32 "	R42R55314	R42R55314[37]	R40107771	R4090100P[72]	N/A[53]	-	R458635	R458635
R44141858[275]	2-7/8 "	R42R55250	R42R55250[37]	R4066365	R4090096[72]	N/A[53]	-	R458635	R458635
R44141858[275]	2-7/8 "	R42R55250	R42R55250[37]	R4066365	R4090096[72]	N/A[53]	-	R458635	R458635
23-122920-002[273]	3-3/8 "	R42R55099	R42R55098[37]	R4066780	R4090021[201]	N/A[53]	-	R458632	R458632
23-122527-002[272]	2-7/8 "	R42R55250	R42R55250[37]	R4066365	R4090096[72]	N/A[53]	-	R458632	R458632
23-123572-004[271]	3-3/8 "	R42R55099	R42R55098[37]	R4066780	R4090021[201]	N/A[53]	-	R458635	R458635
23-123552-004[266]	2-19/32 "	R42R55314	R42R55314[37]	R40107771	R4090100P[72]	N/A[53]	-	R458632	R458632
R44141858[275]	2-7/8 "	R42R55250	R42R55250[37]	R4066365	R4090096[72]	N/A[53]	-	R458635	R458635
23-123552-004[266]	2-7/8 "	R42R55250	R42R55250[37]	R4066365	R4090096[72]	N/A[53]	-	R458635	R458635
R44141476[268]	2-19/32 "	R42R55314	R42R55314[37]	R40107771	R4090100P[72]	N/A[53]	-	R458632	R458632
23-122920-002[273]	2-19/32 "	R42R55314	R42R55314[37]	R40107771	R4090100P[72]	N/A[53]	-	R458632	R458632
23-123552-004[266]	2-7/8 "	R42R55250	R42R55250[37]	R4066365	R4090096[72]	N/A[53]	-	R458632	R458632
23-122701-002[269]	2-7/8 "	R42R55250	R42R55250[37]	R4066365	R4090096[72]	N/A[53]	-	R458635	R458635
23-123552-004[266]	2-19/32 "	R42R55245	R42R55245[38]	R402235118	R402238231[201]	N/A[53]	-	R458632	R458632
23-123572-004[271]	2-7/8 "	R42R55250	R42R55250[37]	R4066365	R4090096[72]	N/A[53]	-	R458635	R458635
23-123572-004[271]	2-7/8 "	R42R55250	R42R55250[37]	R4066365	R4090096[72]	N/A[53]	-	R458632	R458632
23-123572-004[271]	2-19/32 "	R42R55245	R42R55245[38]	R402235118	R402238231[201]	N/A[53]	-	R458635	R458635
R44141476[268]	2-7/8 "	R42R55250	R42R55250[37]	R4066365	R4090096[72]	N/A[53]	-	R458635	R458635
23-123552-004[266]	2-7/8 "	R42R55250	R42R55250[37]	R4066365	R4090096[72]	N/A[53]	-	R458632	R458632
R44141858[275]	2-7/8 "	R42R55250	R42R55250[37]	R4066365	R4090096[72]	N/A[53]	-	R458635	R458635
23-122527-002[272]	3-3/8 "	R42R55099	R42R55098[37]	R4066780	R4090021[201]	N/A[53]	-	R458635	R458635
23-122701-002[269]	2-19/32 "	R42R55314	R42R55314[37]	R40107771	R4090100P[72]	N/A[53]	-	R458635	R458635
23-122701-002[269]	2-7/8 "	R42R55250	R42R55250[37]	R4066365	R4090096[72]	N/A[53]	-	R458632	R458632
R44141858[275]	2-19/32 "	R42R55245	R42R55245[38]	R402235118	R402238231[201]	N/A[53]	-	R458635	R458635
23-122527-002[272]	2-7/8 "	R42R55250	R42R55250[37]	R4066365	R4090096[72]	N/A[53]	-	R458635	R458635
23-122701-002[269]	3-3/8 "	R42R55099	R42R55098[37]	R4066780	R4090021[201]	N/A[53]	-	R458632	R458632
23-123552-004[266]	2-7/8 "	R42R55250	R42R55250[37]	R4066365	R4090096[72]	N/A[53]	-	R458635	R458635
R44141476[268]	2-7/8 "	R42R55250	R42R55250[37]	R4066365	R4090096[72]	N/A[53]	-	R458632	R458632
23-122527-002[272]	2-7/8 "	R42R55250	R42R55250[37]	R4066365	R4090096[72]	N/A[53]	-	R458635	R458635
23-122701-002[269]	2-7/8 "	R42R55250	R42R55250[37]	R4066365	R4090096[72]	N/A[53]	-	R458632	R458632
R44141858[275]	3-3/8 "	R42R55099	R42R55098[37]	R4066780	R4090021[201]	N/A[53]	-	R458635	R458635
23-122527-002[272]	2-19/32 "	R42R55314	R42R55314[37]	R40107771	R4090100P[72]	N/A[53]	-	R458632	R458632
23-123552-004[266]	2-7/8 "	R42R55250	R42R55250[37]	R4066365	R4090096[72]	N/A[53]	-	R458632	R458632
R44141476[268]	2-7/8 "	R42R55250	R42R55250[37]	R4066365	R4090096[72]	N/A[53]	-	R458635	R458635
23-123572-004[271]	2-19/32 "	R42R55314	R42R55314[37]	R40107771	R4090100P[72]	N/A[53]	-	R458635	R458635
23-123572-004[271]	2-7/8 "	R42R55250	R42R55250[37]	R4066365	R4090096[72]	N/A[53]	-	R458635	R458635
23-122920-002[273]	2-7/8 "	R42R55250	R42R55250[37]	R4066365	R4090096[72]	N/A[53]	-	R458632	R458632
23-123572-004[271]	2-19/32 "	R42R55245	R42R55245[38]	R40107771	R4090100P[201]	-	-	R458634[52]	R458634

271 - 6 Stud, Hat Shape

272 - 6 Stud, U Shape

273 - 5 Stud, U Shape, .780 Dia. Studs

275 - 5 Stud, U Shape, .656 Dia. Studs

MAKE MODEL YEAR AXLE CODE AXLE WEIGHT	AXLE & BRK. TYPE	BRK. MFG.	BRAKE SIZE	FMSI	MERITOR DISC PAD OR BRAKE SHOE	MERITOR GUIDE PIN OR RETURN SPRING KIT	MERITOR CALIPER HWD. KIT OR RETURN SPRING KIT	MERITOR ADJUSTER KIT (LEFT WHEEL)	MERITOR ADJUSTER KIT (RIGHT WHEEL)
ITE(Cont.)									
190, 1900, 1910, 1950 SERIES CONVENTIONAL TILT CAB(Cont.)									
1986									
	Rd	BX		7108 - D184	MD184	R40H5010	R40H5519	NR	NR
	Rd	BX		7108 - D184	MD184	R40H5010	R40H5519	NR	NR
	Rd	BX		7108 - D184	MD184	R40H5010	R40H5519	NR	NR
	Rd	BX		7108 - D184	MD184	R40H5010	R40H5519	NR	NR
	Rd	BX		7108 - D184	MD184	R40H5010	R40H5519	NR	NR
	Rd	BX		7108 - D184	MD184	R40H5010	R40H5519	NR	NR
	Rd	BX		7108 - D184	MD184	R40H5010	R40H5519	NR	NR
	Rd	BX		7108 - D184	MD184	R40H5010	R40H5519	NR	NR
	Rd	BX		7108 - D184	MD184	R40H5010	R40H5519	NR	NR
	Rd	BX		7108 - D184	MD184	R40H5010	R40H5519	NR	NR
	Rd	BX		7108 - D184	MD184	R40H5010	R40H5519	NR	NR
	Rd	BX		7108 - D184	MD184	R40H5010	R40H5519	NR	NR
	Rd	BX		7108 - D184	MD184	R40H5010	R40H5519	NR	NR
S1910,S1950 Cargostar Cab Forward Code: 04238	Rd	BX		7142 - D225	MD225	R40H5010	R40H5522	NR	NR
	Rd	BX		7142 - D225	MD225	R40H5010	R40H5522	NR	NR
	Rd	BX		7142 - D225	MD225	R40H5010	R40H5522	NR	NR
	Rd	BX		7142 - D225	MD225	R40H5010	R40H5522	NR	NR
	Rd	BX		7142 - D225	MD225	R40H5010	R40H5522	NR	NR
	Rd	BX		7142 - D225	MD225	R40H5010	R40H5522	NR	NR
	Rd	BX		7142 - D225	MD225	R40H5010	R40H5522	NR	NR
	Rd	BX		7142 - D225	MD225	R40H5010	R40H5522	NR	NR
	Rd	BX		7142 - D225	MD225	R40H5010	R40H5522	NR	NR
	Rd	BX		7142 - D225	MD225	R40H5010	R40H5522	NR	NR
	Rd	BX		7142 - D225	MD225	R40H5010	R40H5522	NR	NR
	Rd	BX		7142 - D225	MD225	R40H5010	R40H5522	NR	NR
	Rd	BX		7142 - D225	MD225	R40H5010	R40H5522	NR	NR
	Rd	BX		7142 - D225	MD225	R40H5010	R40H5522	NR	NR
	Rd	BX		7142 - D225	MD225	R40H5010	R40H5522	NR	NR
	Rd	BX		7142 - D225	MD225	R40H5010	R40H5522	NR	NR
	Rd	BX		7142 - D225	MD225	R40H5010	R40H5522	NR	NR
	Rd	BX		7142 - D225	MD225	R40H5010	R40H5522	NR	NR
	Rd	BX		7142 - D225	MD225	R40H5010	R40H5522	NR	NR
	Rd	BX		7142 - D225	MD225	R40H5010	R40H5522	NR	NR
	Rd	BX		7142 - D225	MD225	R40H5010	R40H5522	NR	NR
	Rd	BX		7142 - D225	MD225	R40H5010	R40H5522	NR	NR
	Rd	BX		7142 - D225	MD225	R40H5010	R40H5522	NR	NR
	Rd	BX		7142 - D225	MD225	R40H5010	R40H5522	NR	NR
	Rd	BX		7142 - D225	MD225	R40H5010	R40H5522	NR	NR
	Rd	BX		7142 - D225	MD225	R40H5010	R40H5522	NR	NR
1985 S1910,S1950 Cargostar Cab Forward Code: 04145	Fd	BX		7142 - D225	MD225	R40H5010	R40H5522	NR	NR
	Fd	BX		7108 - D184	MD184	R40H5010	R40H5519	NR	NR
	Fd	BX		7142 - D225	MD225	R40H5010	R40H5522	NR	NR
	Fd	BX		7108 - D184	MD184	R40H5010	R40H5519	NR	NR
	Fd	BX		7142 - D225	MD225	R40H5010	R40H5522	NR	NR
	Fd	BX		7108 - D184	MD184	R40H5010	R40H5519	NR	NR
	Fd	BX		7142 - D225	MD225	R40H5010	R40H5522	NR	NR
	Fd	BX		7108 - D184	MD184	R40H5010	R40H5519	NR	NR
	Fd	BX		7108 - D184	MD184	R40H5010	R40H5519	NR	NR
	Fd	BX		7108 - D184	MD184	R40H5010	R40H5519	NR	NR
	Fd	BX		7108 - D184	MD184	R40H5010	R40H5519	NR	NR
	Fd	BX		7142 - D225	MD225	R40H5010	R40H5522	NR	NR
	Fd	BX		7108 - D184	MD184	R40H5010	R40H5519	NR	NR
	Fd	BX		7142 - D225	MD225	R40H5010	R40H5522	NR	NR
	Fd	BX		7108 - D184	MD184	R40H5010	R40H5519	NR	NR
	Fd	BX		7108 - D184	MD184	R40H5010	R40H5519	NR	NR
	Fd	BX		7108 - D184	MD184	R40H5010	R40H5519	NR	NR
	Fd	BX		7108 - D184	MD184	R40H5010	R40H5519	NR	NR

37 - Also available as a New unit

38 - First design, may have external joining tube and uses steel pistons

52 - 18" Length

53 - Power Brakes

72 - Phenolic/Steel Face

201 - Steel Piston

266 - 10 Stud, Hat Shaped

267 - 10 Stud, U Shaped

268 - 5 Stud, Hat Shape

MERITOR DRUM OR ROTOR NO.	CALIPER OR CYLINDER BORE SIZE	MERITOR CALIPER OR WHEEL CYLINDER (LEFT)	MERITOR CALIPER OR WHEEL CYLINDER (RIGHT)	MERITOR CALIPER OR WHEEL CYLINDER REPAIR KIT	MERITOR CALIPER PISTON	MERITOR MASTER CYLINDER	MERITOR MASTER CYLINDER KIT	MERITOR BRAKE HOSE (LEFT)	MERITOR BRAKE HOSE (RIGHT)
									ITE(Cont.)
190, 1900, 1910, 1950 SERIES CONVENTIONAL TILT CAB(Cont.)									
23-122527-002[272]	2-19/32 "	R42R55314	R42R55314[37]	R40107771	R4090100P[72]	-	-	R458634[52]	R458634
23-122527-002[272]	2-19/32 "	R42R55245	R42R55245[38]	R402235118	R402238231[201]	-	-	R458634[52]	R458634
R44141628[269]	2-19/32 "	R42R55245	R42R55245[38]	R402235118	R402238231[201]	-	-	R458634[52]	R458634
R44141608[267]	2-19/32 "	R42R55245	R42R55245[38]	R40107771	R4090100P[201]	-	-	R458634[52]	R458634
23-123552-004[266]	2-19/32 "	R42R55245	R42R55245[38]	R40107771	R4090100P[201]	-	-	R458634[52]	R458634
R44141629[269]	2-19/32 "	R42R55245	R42R55245[38]	R40107771	R4090100P[201]	-	-	R458634[52]	R458634
23-123552-004[266]	2-19/32 "	R42R55245	R42R55245[38]	R402235118	R402238231[201]	-	-	R458634[52]	R458634
R44141608[267]	2-19/32 "	R42R55245	R42R55245[38]	R402235118	R402238231[201]	-	-	R458634[52]	R458634
23-123572-004[271]	2-19/32 "	R42R55245	R42R55245[38]	R402235118	R402238231[201]	-	-	R458634[52]	R458634
R44141629[269]	2-19/32 "	R42R55245	R42R55245[38]	R402235118	R402238231[201]	-	-	R458634[52]	R458634
R44141628[269]	2-19/32 "	R42R55245	R42R55245[38]	R40107771	R4090100P[201]	-	-	R458634[52]	R458634
R44141627[270]	2-19/32 "	R42R55245	R42R55245[38]	R40107771	R4090100P[201]	-	-	R458634[52]	R458634
R44141627[270]	2-19/32 "	R42R55245	R42R55245[38]	R402235118	R402238231[201]	-	-	R458634[52]	R458634
23-122527-002[272]	2-7/8 "	R42R55250	R42R55250[37]	R4066365	R4090096[72]	-	-	R458634[52]	R458634
R44141608[267]	2-7/8 "	R42R55250	R42R55250[37]	R4066365	R4090096[72]	-	-	R458634[52]	R458634
23-123552-004[266]	2-7/8 "	R42R55250	R42R55250[37]	R4066365	R4090096[72]	-	-	R458634[52]	R458634
23-123552-004[266]	2-7/8 "	R42R55250	R42R55250[37]	R4066365	R4090096[72]	-	-	R458634[52]	R458634
R44141608[267]	2-7/8 "	R42R55250	R42R55250[37]	R4066365	R4090096[72]	-	-	R458634[52]	R458634
23-123572-004[271]	2-7/8 "	R42R55250	R42R55250[37]	R4066365	R4090096[72]	-	-	R458634[52]	R458634
23-123552-004[266]	2-7/8 "	R42R55250	R42R55250[37]	R4066365	R4090096[72]	-	-	R458634[52]	R458634
23-122527-002[272]	2-7/8 "	R42R55250	R42R55250[37]	R4066365	R4090096[72]	-	-	R458634[52]	R458634
R44141627[270]	2-7/8 "	R42R55250	R42R55250[37]	R4066365	R4090096[72]	-	-	R458634[52]	R458634
23-123572-004[271]	2-7/8 "	R42R55250	R42R55250[37]	R4066365	R4090096[72]	-	-	R458634[52]	R458634
23-122527-002[272]	2-7/8 "	R42R55250	R42R55250[37]	R4066365	R4090096[72]	-	-	R458634[52]	R458634
R44141627[270]	2-7/8 "	R42R55250	R42R55250[37]	R4066365	R4090096[72]	-	-	R458634[52]	R458634
R44141628[269]	2-7/8 "	R42R55250	R42R55250[37]	R4066365	R4090096[72]	-	-	R458634[52]	R458634
R44141628[269]	2-7/8 "	R42R55250	R42R55250[37]	R4066365	R4090096[72]	-	-	R458634[52]	R458634
R44141627[270]	2-7/8 "	R42R55250	R42R55250[37]	R4066365	R4090096[72]	-	-	R458634[52]	R458634
R44141629[269]	2-7/8 "	R42R55250	R42R55250[37]	R4066365	R4090096[72]	-	-	R458634[52]	R458634
23-123572-004[271]	2-7/8 "	R42R55250	R42R55250[37]	R4066365	R4090096[72]	-	-	R458634[52]	R458634
R44141629[269]	2-7/8 "	R42R55250	R42R55250[37]	R4066365	R4090096[72]	-	-	R458634[52]	R458634
R44141628[269]	2-7/8 "	R42R55250	R42R55250[37]	R4066365	R4090096[72]	-	-	R458634[52]	R458634
R44141629[269]	2-7/8 "	R42R55250	R42R55250[37]	R4066365	R4090096[72]	-	-	R458634[52]	R458634
R44141608[267]	2-7/8 "	R42R55250	R42R55250[37]	R4066365	R4090096[72]	-	-	R458634[52]	R458634
R44141608[267]	2-7/8 "	R42R55250	R42R55250[37]	R4066365	R4090096[72]	-	-	R458634[52]	R458634
R44141629[269]	2-7/8 "	R42R55250	R42R55250[37]	R4066365	R4090096[72]	-	-	R458634[52]	R458634
R44141628[269]	2-7/8 "	R42R55250	R42R55250[37]	R4066365	R4090096[72]	-	-	R458634[52]	R458634
23-122527-002[272]	2-7/8 "	R42R55250	R42R55250[37]	R4066365	R4090096[72]	-	-	R458634[52]	R458634
23-123572-004[271]	2-7/8 "	R42R55250	R42R55250[37]	R4066365	R4090096[72]	-	-	R458634[52]	R458634
23-123552-004[266]	2-7/8 "	R42R55250	R42R55250[37]	R4066365	R4090096[72]	-	-	R458634[52]	R458634
R44141627[270]	2-7/8 "	R42R55250	R42R55250[37]	R4066365	R4090096[72]	-	-	R458634[52]	R458634
23-123572-004[271]	2-7/8 "	R42R55250	R42R55250[37]	R4066365	R4090096[72]	N/A[53]	-	R458635	R458635
23-122527-002[272]	2-19/32 "	R42R55245	R42R55245[38]	R402235118	R402238231[201]	N/A[53]	-	R458632	R458632
23-122920-002[273]	2-7/8 "	R42R55250	R42R55250[37]	R4066365	R4090096[72]	N/A[53]	-	R458632	R458632
23-122920-002[273]	2-19/32 "	R42R55314	R42R55314[37]	R40107771	R4090100P[72]	N/A[53]	-	R458635	R458635
23-122527-002[272]	2-7/8 "	R42R55250	R42R55250[37]	R4066365	R4090096[72]	N/A[53]	-	R458632	R458632
23-123552-004[266]	2-19/32 "	R42R55245	R42R55245[38]	R402235118	R402238231[201]	N/A[53]	-	R458635	R458635
23-122527-002[272]	2-7/8 "	R42R55250	R42R55250[37]	R4066365	R4090096[72]	N/A[53]	-	R458632	R458632
23-123552-004[266]	2-19/32 "	R42R55314	R42R55314[37]	R40107771	R4090100P[72]	N/A[53]	-	R458635	R458635
R44141858[275]	2-19/32 "	R42R55245	R42R55245[38]	R402235118	R402238231[201]	N/A[53]	-	R458632	R458632
23-122920-002[273]	2-19/32 "	R42R55314	R42R55314[37]	R40107771	R4090100P[72]	N/A[53]	-	R458632	R458632
23-123572-004[271]	2-19/32 "	R42R55314	R42R55314[37]	R40107771	R4090100P[72]	N/A[53]	-	R458635	R458635
23-123552-004[266]	2-7/8 "	R42R55250	R42R55250[37]	R4066365	R4090096[72]	N/A[53]	-	R458632	R458632
23-122527-002[272]	3-3/8 "	R42R55099	R42R55098[37]	R4066780	R4090021[201]	N/A[53]	-	R458635	R458635
23-122920-002[273]	2-7/8 "	R42R55250	R42R55250[37]	R4066365	R4090096[72]	N/A[53]	-	R458635	R458635
23-123572-004[271]	3-3/8 "	R42R55099	R42R55098[37]	R4066780	R4090021[201]	N/A[53]	-	R458632	R458632
23-123572-004[271]	2-19/32 "	R42R55245	R42R55245[38]	R402235118	R402238231[201]	N/A[53]	-	R458635	R458635
R44141476[268]	2-19/32 "	R42R55245	R42R55245[38]	R402235118	R402238231[201]	N/A[53]	-	R458632	R458632
23-123552-004[266]	3-3/8 "	R42R55099	R42R55098[37]	R4066780	R4090021[201]	N/A[53]	-	R458632	R458632

269 - 5 Stud, U Shape

270 - 5 Stud, U Shape, .766 Dia. Studs

271 - 6 Stud, Hat Shape

272 - 6 Stud, U Shape

273 - 5 Stud, U Shape, .780 Dia. Studs

275 - 5 Stud, U Shape, .656 Dia. Studs

MAKE MODEL YEAR AXLE CODE AXLE WEIGHT	AXLE & BRK. TYPE	BRK. MFG.	BRAKE SIZE	FMSI	MERITOR DISC PAD OR BRAKE SHOE	MERITOR GUIDE PIN OR RETURN SPRING KIT	MERITOR CALIPER HWD. KIT OR RETURN SPRING KIT	MERITOR ADJUSTER KIT (LEFT WHEEL)	MERITOR ADJUSTER KIT (RIGHT WHEEL)
ITE(Cont.)									
190, 1900, 1910, 1950 SERIES CONVENTIONAL TILT CAB(Cont.)									
1985									
	Fd	BX		7142 - D225	MD225	R40H5010	R40H5522	NR	NR
	Fd	BX		7142 - D225	MD225	R40H5010	R40H5522	NR	NR
	Fd	BX		7142 - D225	MD225	R40H5010	R40H5522	NR	NR
	Fd	BX		7142 - D225	MD225	R40H5010	R40H5522	NR	NR
	Fd	BX		7142 - D225	MD225	R40H5010	R40H5522	NR	NR
	Fd	BX		7108 - D184	MD184	R40H5010	R40H5519	NR	NR
	Fd	BX		7142 - D225	MD225	R40H5010	R40H5522	NR	NR
	Fd	BX		7142 - D225	MD225	R40H5010	R40H5522	NR	NR
	Fd	BX		7108 - D184	MD184	R40H5010	R40H5519	NR	NR
	Fd	BX		7142 - D225	MD225	R40H5010	R40H5522	NR	NR
	Fd	BX		7142 - D225	MD225	R40H5010	R40H5522	NR	NR
	Fd	BX		7142 - D225	MD225	R40H5010	R40H5522	NR	NR
	Fd	BX		7142 - D225	MD225	R40H5010	R40H5522	NR	NR
	Fd	BX		7108 - D184	MD184	R40H5010	R40H5519	NR	NR
	Fd	BX		7108 - D184	MD184	R40H5010	R40H5519	NR	NR
	Fd	BX		7142 - D225	MD225	R40H5010	R40H5522	NR	NR
	Fd	BX		7108 - D184	MD184	R40H5010	R40H5519	NR	NR
	Fd	BX		7142 - D225	MD225	R40H5010	R40H5522	NR	NR
	Fd	BX		7108 - D184	MD184	R40H5010	R40H5519	NR	NR
	Fd	BX		7108 - D184	MD184	R40H5010	R40H5519	NR	NR
	Fd	BX		7142 - D225	MD225	R40H5010	R40H5522	NR	NR
	Fd	BX		7142 - D225	MD225	R40H5010	R40H5522	NR	NR
	Fd	BX		7142 - D225	MD225	R40H5010	R40H5522	NR	NR
	Fd	BX		7142 - D225	MD225	R40H5010	R40H5522	NR	NR
	Fd	BX		7142 - D225	MD225	R40H5010	R40H5522	NR	NR
	Fd	BX		7142 - D225	MD225	R40H5010	R40H5522	NR	NR
	Fd	BX		7108 - D184	MD184	R40H5010	R40H5519	NR	NR
	Fd	BX		7108 - D184	MD184	R40H5010	R40H5519	NR	NR
	Fd	BX		7142 - D225	MD225	R40H5010	R40H5522	NR	NR
	Fd	BX		7108 - D184	MD184	R40H5010	R40H5519	NR	NR
	Fd	BX		7108 - D184	MD184	R40H5010	R40H5519	NR	NR
	Fd	BX		7108 - D184	MD184	R40H5010	R40H5519	NR	NR
	Fd	BX		7142 - D225	MD225	R40H5010	R40H5522	NR	NR
	Fd	BX		7142 - D225	MD225	R40H5010	R40H5522	NR	NR
	Fd	BX		7108 - D184	MD184	R40H5010	R40H5519	NR	NR
	Fd	BX		7142 - D225	MD225	R40H5010	R40H5522	NR	NR
	Fd	BX		7142 - D225	MD225	R40H5010	R40H5522	NR	NR
	Fd	BX		7142 - D225	MD225	R40H5010	R40H5522	NR	NR
	Fd	BX		7142 - D225	MD225	R40H5010	R40H5522	NR	NR
	Fd	BX		7142 - D225	MD225	R40H5010	R40H5522	NR	NR
	Fd	BX		7142 - D225	MD225	R40H5010	R40H5522	NR	NR
	Fd	BX		7108 - D184	MD184	R40H5010	R40H5519	NR	NR
	Fd	BX		7142 - D225	MD225	R40H5010	R40H5522	NR	NR
	Fd	BX		7108 - D184	MD184	R40H5010	R40H5519	NR	NR
	Fd	BX		7108 - D184	MD184	R40H5010	R40H5519	NR	NR
	Fd	BX		7108 - D184	MD184	R40H5010	R40H5519	NR	NR
	Fd	BX		7142 - D225	MD225	R40H5010	R40H5522	NR	NR
	Fd	BX		7142 - D225	MD225	R40H5010	R40H5522	NR	NR
	Fd	BX		7108 - D184	MD184	R40H5010	R40H5519	NR	NR
	Fd	BX		7142 - D225	MD225	R40H5010	R40H5522	NR	NR
	Fd	BX		7108 - D184	MD184	R40H5010	R40H5519	NR	NR
	Fd	BX		7142 - D225	MD225	R40H5010	R40H5522	NR	NR
	Fd	BX		7142 - D225	MD225	R40H5010	R40H5522	NR	NR
	Fd	BX		7142 - D225	MD225	R40H5010	R40H5522	NR	NR
	Fd	BX		7142 - D225	MD225	R40H5010	R40H5522	NR	NR
	Fd	BX		7142 - D225	MD225	R40H5010	R40H5522	NR	NR
	Fd	BX		7142 - D225	MD225	R40H5010	R40H5522	NR	NR
	Fd	BX		7108 - D184	MD184	R40H5010	R40H5519	NR	NR

37 - Also available as a New unit

38 - First design, may have external joining tube and uses steel pistons

53 - Power Brakes

72 - Phenolic/Steel Face

201 - Steel Piston

266 - 10 Stud, Hat Shaped

268 - 5 Stud, Hat Shape

269 - 5 Stud, U Shape

271 - 6 Stud, Hat Shape

MERITOR DRUM OR ROTOR NO.	CALIPER OR CYLINDER BORE SIZE	MERITOR CALIPER OR WHEEL CYLINDER (LEFT)	MERITOR CALIPER OR WHEEL CYLINDER (RIGHT)	MERITOR CALIPER OR WHEEL CYLINDER REPAIR KIT	MERITOR CALIPER PISTON	MERITOR MASTER CYLINDER	MERITOR MASTER CYLINDER KIT	MERITOR BRAKE HOSE (LEFT)	MERITOR BRAKE HOSE (RIGHT)
									ITE(Cont.)
					190, 1900, 1910, 1950 SERIES CONVENTIONAL TILT CAB(Cont.)				
23-122527-002[272]	2-7/8 "	R42R55250	R42R55250[37]	R4066365	R4090096[72]	N/A[53]	-	R458632	R458632
R44141476[268]	2-7/8 "	R42R55250	R42R55250[37]	R4066365	R4090096[72]	N/A[53]	-	R458632	R458632
23-123552-004[266]	2-7/8 "	R42R55250	R42R55250[37]	R4066365	R4090096[72]	N/A[53]	-	R458632	R458632
R44141858[275]	2-7/8 "	R42R55250	R42R55250[37]	R4066365	R4090096[72]	N/A[53]	-	R458632	R458632
23-123552-004[266]	2-7/8 "	R42R55250	R42R55250[37]	R4066365	R4090096[72]	N/A[53]	-	R458632	R458632
23-123572-004[271]	3-3/8 "	R42R55099	R42R55098[37]	R4066780	R4090021[201]	N/A[53]	-	R458635	R458635
23-122701-002[269]	2-7/8 "	R42R55250	R42R55250[37]	R4066365	R4090096[72]	N/A[53]	-	R458635	R458635
23-122701-002[269]	2-7/8 "	R42R55250	R42R55250[37]	R4066365	R4090096[72]	N/A[53]	-	R458635	R458635
23-122527-002[272]	3-3/8 "	R42R55099	R42R55098[37]	R4066780	R4090021[201]	N/A[53]	-	R458632	R458632
R44141858[275]	2-7/8 "	R42R55250	R42R55250[37]	R4066365	R4090096[72]	N/A[53]	-	R458632	R458632
23-122701-002[269]	2-7/8 "	R42R55250	R42R55250[37]	R4066365	R4090096[72]	N/A[53]	-	R458635	R458635
23-123552-004[266]	2-7/8 "	R42R55250	R42R55250[37]	R4066365	R4090096[72]	N/A[53]	-	R458632	R458632
23-122920-002[273]	2-7/8 "	R42R55250	R42R55250[37]	R4066365	R4090096[72]	N/A[53]	-	R458632	R458632
R44141476[268]	3-3/8 "	R42R55099	R42R55098[37]	R4066780	R4090021[201]	N/A[53]	-	R458632	R458632
23-122527-002[272]	2-19/32 "	R42R55314	R42R55314[37]	R40107771	R4090100P[72]	N/A[53]	-	R458632	R458632
R44141858[275]	2-7/8 "	R42R55250	R42R55250[37]	R4066365	R4090096[72]	N/A[53]	-	R458635	R458635
23-122920-002[273]	3-3/8 "	R42R55099	R42R55098[37]	R4066780	R4090021[201]	N/A[53]	-	R458635	R458635
R44141476[268]	2-7/8 "	R42R55250	R42R55250[37]	R4066365	R4090096[72]	N/A[53]	-	R458632	R458632
R44141858[275]	2-19/32 "	R42R55314	R42R55314[37]	R40107771	R4090100P[72]	N/A[53]	-	R458632	R458632
R44141476[268]	2-19/32 "	R42R55314	R42R55314[37]	R40107771	R4090100P[72]	N/A[53]	-	R458635	R458635
23-123572-004[271]	2-7/8 "	R42R55250	R42R55250[37]	R4066365	R4090096[72]	N/A[53]	-	R458632	R458632
23-123572-004[271]	2-7/8 "	R42R55250	R42R55250[37]	R4066365	R4090096[72]	N/A[53]	-	R458635	R458635
23-122701-002[269]	2-7/8 "	R42R55250	R42R55250[37]	R4066365	R4090096[72]	N/A[53]	-	R458632	R458632
23-123552-004[266]	2-7/8 "	R42R55250	R42R55250[37]	R4066365	R4090096[72]	N/A[53]	-	R458635	R458635
R44141476[268]	2-7/8 "	R42R55250	R42R55250[37]	R4066365	R4090096[72]	N/A[53]	-	R458632	R458632
23-123552-004[266]	2-7/8 "	R42R55250	R42R55250[37]	R4066365	R4090096[72]	N/A[53]	-	R458635	R458635
23-123552-004[266]	2-19/32 "	R42R55245	R42R55245[38]	R402235118	R402238231[201]	N/A[53]	-	R458632	R458632
R44141476[268]	3-3/8 "	R42R55099	R42R55098[37]	R4066780	R4090021[201]	N/A[53]	-	R458635	R458635
R44141858[275]	2-7/8 "	R42R55250	R42R55250[37]	R4066365	R4090096[72]	N/A[53]	-	R458635	R458635
R44141858[275]	3-3/8 "	R42R55099	R42R55098[37]	R4066780	R4090021[201]	N/A[53]	-	R458635	R458635
R44141476[268]	2-19/32 "	R42R55245	R42R55245[38]	R402235118	R402238231[201]	N/A[53]	-	R458635	R458635
23-122701-002[269]	2-19/32 "	R42R55314	R42R55314[37]	R40107771	R4090100P[72]	N/A[53]	-	R458635	R458635
23-122527-002[272]	2-7/8 "	R42R55250	R42R55250[37]	R4066365	R4090096[72]	N/A[53]	-	R458635	R458635
R44141858[275]	2-7/8 "	R42R55250	R42R55250[37]	R4066365	R4090096[72]	N/A[53]	-	R458635	R458635
R44141858[275]	2-19/32 "	R42R55245	R42R55245[38]	R402235118	R402238231[201]	N/A[53]	-	R458635	R458635
R44141476[268]	2-7/8 "	R42R55250	R42R55250[37]	R4066365	R4090096[72]	N/A[53]	-	R458635	R458635
23-123572-004[271]	2-7/8 "	R42R55250	R42R55250[37]	R4066365	R4090096[72]	N/A[53]	-	R458632	R458632
23-122527-002[272]	2-7/8 "	R42R55250	R42R55250[37]	R4066365	R4090096[72]	N/A[53]	-	R458632	R458632
23-123572-004[271]	2-7/8 "	R42R55250	R42R55250[37]	R4066365	R4090096[72]	N/A[53]	-	R458635	R458635
23-122701-002[269]	2-7/8 "	R42R55250	R42R55250[37]	R4066365	R4090096[72]	N/A[53]	-	R458632	R458632
23-123572-004[271]	2-7/8 "	R42R55250	R42R55250[37]	R4066365	R4090096[72]	N/A[53]	-	R458632	R458632
R44141858[275]	2-19/32 "	R42R55314	R42R55314[37]	R40107771	R4090100P[72]	N/A[53]	-	R458635	R458635
23-122527-002[272]	2-7/8 "	R42R55250	R42R55250[37]	R4066365	R4090096[72]	N/A[53]	-	R458635	R458635
23-123572-004[271]	2-19/32 "	R42R55245	R42R55245[38]	R402235118	R402238231[201]	N/A[53]	-	R458632	R458632
23-123552-004[266]	3-3/8 "	R42R55099	R42R55098[37]	R4066780	R4090021[201]	N/A[53]	-	R458635	R458635
R44141858[275]	3-3/8 "	R42R55099	R42R55098[37]	R4066780	R4090021[201]	N/A[53]	-	R458632	R458632
23-123572-004[271]	2-7/8 "	R42R55250	R42R55250[37]	R4066365	R4090096[72]	N/A[53]	-	R458632	R458632
R44141476[268]	2-7/8 "	R42R55250	R42R55250[37]	R4066365	R4090096[72]	N/A[53]	-	R458635	R458635
23-122701-002[269]	3-3/8 "	R42R55099	R42R55098[37]	R4066780	R4090021[201]	N/A[53]	-	R458632	R458632
23-123552-004[266]	2-7/8 "	R42R55250	R42R55250[37]	R4066365	R4090096[72]	N/A[53]	-	R458635	R458635
23-123572-004[271]	2-19/32 "	R42R55314	R42R55314[37]	R40107771	R4090100P[72]	N/A[53]	-	R458632	R458632
23-122527-002[272]	2-7/8 "	R42R55250	R42R55250[37]	R4066365	R4090096[72]	N/A[53]	-	R458635	R458635
23-122920-002[273]	2-7/8 "	R42R55250	R42R55250[37]	R4066365	R4090096[72]	N/A[53]	-	R458632	R458632
23-122701-002[269]	3-3/8 "	R42R55099	R42R55098[37]	R4066780	R4090021[201]	N/A[53]	-	R458635	R458635
R44141858[275]	2-7/8 "	R42R55250	R42R55250[37]	R4066365	R4090096[72]	N/A[53]	-	R458635	R458635
23-122920-002[273]	3-3/8 "	R42R55099	R42R55098[37]	R4066780	R4090021[201]	N/A[53]	-	R458632	R458632
23-122920-002[273]	2-7/8 "	R42R55250	R42R55250[37]	R4066365	R4090096[72]	N/A[53]	-	R458635	R458635
R44141858[275]	2-7/8 "	R42R55250	R42R55250[37]	R4066365	R4090096[72]	N/A[53]	-	R458632	R458632
23-123552-004[266]	2-7/8 "	R42R55250	R42R55250[37]	R4066365	R4090096[72]	N/A[53]	-	R458635	R458635
23-122701-002[269]	2-7/8 "	R42R55250	R42R55250[37]	R4066365	R4090096[72]	N/A[53]	-	R458632	R458632
23-122527-002[272]	2-7/8 "	R42R55250	R42R55250[37]	R4066365	R4090096[72]	N/A[53]	-	R458635	R458635
R44141476[268]	2-7/8 "	R42R55250	R42R55250[37]	R4066365	R4090096[72]	N/A[53]	-	R458635	R458635
23-123572-004[271]	2-7/8 "	R42R55250	R42R55250[37]	R4066365	R4090096[72]	N/A[53]	-	R458635	R458635
23-123552-004[266]	2-19/32 "	R42R55314	R42R55314[37]	R40107771	R4090100P[72]	N/A[53]	-	R458632	R458632

272 - 6 Stud, U Shape

273 - 5 Stud, U Shape, .780 Dia. Studs

275 - 5 Stud, U Shape, .656 Dia. Studs

MAKE MODEL YEAR AXLE CODE AXLE WEIGHT	AXLE & BRK. TYPE	BRK. MFG.	BRAKE SIZE	FMSI	MERITOR DISC PAD OR BRAKE SHOE	MERITOR GUIDE PIN OR RETURN SPRING KIT	MERITOR CALIPER HWD. KIT OR RETURN SPRING KIT	MERITOR ADJUSTER KIT (LEFT WHEEL)	MERITOR ADJUSTER KIT (RIGHT WHEEL)
ITE(Cont.)									
190, 1900, 1910, 1950 SERIES CONVENTIONAL TILT CAB(Cont.)									
1985									
	Fd	BX		7108 - D184	MD184	R40H5010	R40H5519	NR	NR
	Fd	BX		7108 - D184	MD184	R40H5010	R40H5519	NR	NR
	Fd	BX		7108 - D184	MD184	R40H5010	R40H5519	NR	NR
	Fd	BX		7142 - D225	MD225	R40H5010	R40H5522	NR	NR
	Fd	BX		7142 - D225	MD225	R40H5010	R40H5522	NR	NR
	Fd	BX		7108 - D184	MD184	R40H5010	R40H5519	NR	NR
S1910,S1950 Cargostar Cab Forward Code: 04237									
	Rd	BX		7108 - D184	MD184	R40H5010	R40H5519	NR	NR
	Rd	BX		7108 - D184	MD184	R40H5010	R40H5519	NR	NR
	Rd	BX		7108 - D184	MD184	R40H5010	R40H5519	NR	NR
	Rd	BX		7108 - D184	MD184	R40H5010	R40H5519	NR	NR
	Rd	BX		7108 - D184	MD184	R40H5010	R40H5519	NR	NR
	Rd	BX		7108 - D184	MD184	R40H5010	R40H5519	NR	NR
	Rd	BX		7108 - D184	MD184	R40H5010	R40H5519	NR	NR
	Rd	BX		7108 - D184	MD184	R40H5010	R40H5519	NR	NR
	Rd	BX		7108 - D184	MD184	R40H5010	R40H5519	NR	NR
	Rd	BX		7108 - D184	MD184	R40H5010	R40H5519	NR	NR
	Rd	BX		7108 - D184	MD184	R40H5010	R40H5519	NR	NR
	Rd	BX		7108 - D184	MD184	R40H5010	R40H5519	NR	NR
	Rd	BX		7108 - D184	MD184	R40H5010	R40H5519	NR	NR
	Rd	BX		7108 - D184	MD184	R40H5010	R40H5519	NR	NR
S1910,S1950 Cargostar Cab Forward Code: 04238									
	Rd	BX		7142 - D225	MD225	R40H5010	R40H5522	NR	NR
	Rd	BX		7142 - D225	MD225	R40H5010	R40H5522	NR	NR
	Rd	BX		7142 - D225	MD225	R40H5010	R40H5522	NR	NR
	Rd	BX		7142 - D225	MD225	R40H5010	R40H5522	NR	NR
	Rd	BX		7142 - D225	MD225	R40H5010	R40H5522	NR	NR
	Rd	BX		7142 - D225	MD225	R40H5010	R40H5522	NR	NR
	Rd	BX		7142 - D225	MD225	R40H5010	R40H5522	NR	NR
	Rd	BX		7142 - D225	MD225	R40H5010	R40H5522	NR	NR
	Rd	BX		7142 - D225	MD225	R40H5010	R40H5522	NR	NR
	Rd	BX		7142 - D225	MD225	R40H5010	R40H5522	NR	NR
	Rd	BX		7142 - D225	MD225	R40H5010	R40H5522	NR	NR
	Rd	BX		7142 - D225	MD225	R40H5010	R40H5522	NR	NR
	Rd	BX		7142 - D225	MD225	R40H5010	R40H5522	NR	NR
	Rd	BX		7142 - D225	MD225	R40H5010	R40H5522	NR	NR
	Rd	BX		7142 - D225	MD225	R40H5010	R40H5522	NR	NR
	Rd	BX		7142 - D225	MD225	R40H5010	R40H5522	NR	NR
	Rd	BX		7142 - D225	MD225	R40H5010	R40H5522	NR	NR
	Rd	BX		7142 - D225	MD225	R40H5010	R40H5522	NR	NR
	Rd	BX		7142 - D225	MD225	R40H5010	R40H5522	NR	NR
	Rd	BX		7142 - D225	MD225	R40H5010	R40H5522	NR	NR
	Rd	BX		7142 - D225	MD225	R40H5010	R40H5522	NR	NR
	Rd	BX		7142 - D225	MD225	R40H5010	R40H5522	NR	NR
	Rd	BX		7142 - D225	MD225	R40H5010	R40H5522	NR	NR
	Rd	BX		7142 - D225	MD225	R40H5010	R40H5522	NR	NR
	Rd	BX		7142 - D225	MD225	R40H5010	R40H5522	NR	NR
	Rd	BX		7142 - D225	MD225	R40H5010	R40H5522	NR	NR
	Rd	BX		7142 - D225	MD225	R40H5010	R40H5522	NR	NR
	Rd	BX		7142 - D225	MD225	R40H5010	R40H5522	NR	NR
	Rd	BX		7142 - D225	MD225	R40H5010	R40H5522	NR	NR
	Rd	BX		7142 - D225	MD225	R40H5010	R40H5522	NR	NR
	Rd	BX		7142 - D225	MD225	R40H5010	R40H5522	NR	NR
	Rd	BX		7142 - D225	MD225	R40H5010	R40H5522	NR	NR
	Rd	BX		7142 - D225	MD225	R40H5010	R40H5522	NR	NR
	Rd	BX		7142 - D225	MD225	R40H5010	R40H5522	NR	NR
	Rd	BX		7142 - D225	MD225	R40H5010	R40H5522	NR	NR
	Rd	BX		7142 - D225	MD225	R40H5010	R40H5522	NR	NR
	Rd	BX		7142 - D225	MD225	R40H5010	R40H5522	NR	NR
	Rd	BX		7142 - D225	MD225	R40H5010	R40H5522	NR	NR
1984 S1910,S1950 Cargostar Cab Forward Code: 04145									
	Fd	BX		7108 - D184	MD184	R40H5010	R40H5519	NR	NR
	Fd	BX		7142 - D225	MD225	R40H5010	R40H5522	NR	NR
	Fd	BX		7108 - D184	MD184	R40H5010	R40H5519	NR	NR
	Fd	BX		7142 - D225	MD225	R40H5010	R40H5522	NR	NR
	Fd	BX		7142 - D225	MD225	R40H5010	R40H5522	NR	NR
	Fd	BX		7142 - D225	MD225	R40H5010	R40H5522	NR	NR
	Fd	BX		7142 - D225	MD225	R40H5010	R40H5522	NR	NR
	Fd	BX		7142 - D225	MD225	R40H5010	R40H5522	NR	NR
	Fd	BX		7108 - D184	MD184	R40H5010	R40H5519	NR	NR

37 - Also available as a New unit

38 - First design, may have external joining tube and uses steel pistons

39 - First design, uses steel pistons.

40 - For chrome plated steel version, use R4090070P

52 - 18" Length

53 - Power Brakes

72 - Phenolic/Steel Face

201 - Steel Piston

266 - 10 Stud, Hat Shaped

MERITOR DRUM OR ROTOR NO.	CALIPER OR CYLINDER BORE SIZE	MERITOR CALIPER OR WHEEL CYLINDER (LEFT)	MERITOR CALIPER OR WHEEL CYLINDER (RIGHT)	MERITOR CALIPER OR WHEEL CYLINDER REPAIR KIT	MERITOR CALIPER PISTON	MERITOR MASTER CYLINDER	MERITOR MASTER CYLINDER KIT	MERITOR BRAKE HOSE (LEFT)	MERITOR BRAKE HOSE (RIGHT)
									ITE(Cont.)
190, 1900, 1910, 1950 SERIES CONVENTIONAL TILT CAB(Cont.)									
R44141476[268]	2-19/32 "	R42R55314	R42R55314[37]	R40107771	R4090100P[72]	N/A[53]	-	R458632	R458632
23-122701-002[269]	2-19/32 "	R42R55314	R42R55314[37]	R40107771	R4090100P[72]	N/A[53]	-	R458632	R458632
23-122527-002[272]	2-19/32 "	R42R55314	R42R55314[37]	R40107771	R4090100P[72]	N/A[53]	-	R458635	R458635
23-122920-002[273]	2-7/8 "	R42R55250	R42R55250[37]	R4066365	R4090096[72]	N/A[53]	-	R458635	R458635
R44141858[275]	2-7/8 "	R42R55250	R42R55250[37]	R4066365	R4090096[72]	N/A[53]	-	R458632	R458632
23-122527-002[272]	2-19/32 "	R42R55245	R42R55245[38]	R402235118	R402238231[201]	N/A[53]	-	R458635	R458635
R44141628[269]	2-19/32 "	R42R55245	R42R55245[38]	R402235118	R402238231[201]	-	-	R458634[52]	R458634
R44141608[267]	2-19/32 "	R42R55245	R42R55245[38]	R402235118	R402238231[201]	-	-	R458634[52]	R458634
23-122527-002[272]	2-19/32 "	R42R55314	R42R55314[37]	R40107771	R4090100P[72]	-	-	R458634[52]	R458634
R44141627[270]	2-19/32 "	R42R55245	R42R55245[38]	R40107771	R4090100P[201]	-	-	R458634[52]	R458634
23-122527-002[272]	2-19/32 "	R42R55245	R42R55245[38]	R402235118	R402238231[201]	-	-	R458634[52]	R458634
R44141608[267]	2-19/32 "	R42R55245	R42R55245[38]	R40107771	R4090100P[201]	-	-	R458634[52]	R458634
R44141627[270]	2-19/32 "	R42R55245	R42R55245[38]	R402235118	R402238231[201]	-	-	R458634[52]	R458634
R44141628[269]	2-19/32 "	R42R55245	R42R55245[38]	R40107771	R4090100P[201]	-	-	R458634[52]	R458634
23-123572-004[271]	2-19/32 "	R42R55245	R42R55245[38]	R40107771	R4090100P[201]	-	-	R458634[52]	R458634
R44141629[269]	2-19/32 "	R42R55245	R42R55245[38]	R40107771	R4090100P[201]	-	-	R458634[52]	R458634
23-123552-004[266]	2-19/32 "	R42R55245	R42R55245[38]	R402235118	R402238231[201]	-	-	R458634[52]	R458634
23-123552-004[266]	2-19/32 "	R42R55245	R42R55245[38]	R40107771	R4090100P[201]	-	-	R458634[52]	R458634
R44141629[269]	2-19/32 "	R42R55245	R42R55245[38]	R402235118	R402238231[201]	-	-	R458634[52]	R458634
23-123572-004[271]	2-19/32 "	R42R55245	R42R55245[38]	R402235118	R402238231[201]	-	-	R458634[52]	R458634
R44141627[270]	2-7/8 "	R42R55250	R42R55250[37]	R4066365	R4090096[72]	-	-	R458634[52]	R458634
23-122527-002[272]	2-7/8 "	R42R55250	R42R55250[37]	R4066365	R4090096[72]	-	-	R458634[52]	R458634
R44141628[269]	2-7/8 "	R42R55250	R42R55250[37]	R4066365	R4090096[72]	-	-	R458634[52]	R458634
23-123552-004[266]	2-7/8 "	R42R55250	R42R55250[37]	R4066365	R4090096[72]	-	-	R458634[52]	R458634
R44141628[269]	2-7/8 "	R42R55250	R42R55250[37]	R4066365	R4090096[72]	-	-	R458634[52]	R458634
R44141627[270]	2-7/8 "	R42R55250	R42R55250[37]	R4066365	R4090096[72]	-	-	R458634[52]	R458634
R44141608[267]	2-7/8 "	R42R55250	R42R55250[37]	R4066365	R4090096[72]	-	-	R458634[52]	R458634
R44141628[269]	2-7/8 "	R42R55250	R42R55250[37]	R4066365	R4090096[72]	-	-	R458634[52]	R458634
R44141608[267]	2-7/8 "	R42R55250	R42R55250[37]	R4066365	R4090096[72]	-	-	R458634[52]	R458634
R44141627[270]	2-7/8 "	R42R55250	R42R55250[37]	R4066365	R4090096[72]	-	-	R458634[52]	R458634
23-123552-004[266]	2-7/8 "	R42R55250	R42R55250[37]	R4066365	R4090096[72]	-	-	R458634[52]	R458634
R44141629[269]	2-7/8 "	R42R55250	R42R55250[37]	R4066365	R4090096[72]	-	-	R458634[52]	R458634
23-123552-004[266]	2-7/8 "	R42R55250	R42R55250[37]	R4066365	R4090096[72]	-	-	R458634[52]	R458634
R44141608[267]	2-7/8 "	R42R55250	R42R55250[37]	R4066365	R4090096[72]	-	-	R458634[52]	R458634
23-122527-002[272]	2-7/8 "	R42R55250	R42R55250[37]	R4066365	R4090096[72]	-	-	R458634[52]	R458634
R44141629[269]	2-7/8 "	R42R55250	R42R55250[37]	R4066365	R4090096[72]	-	-	R458634[52]	R458634
23-123572-004[271]	2-7/8 "	R42R55250	R42R55250[37]	R4066365	R4090096[72]	-	-	R458634[52]	R458634
23-122527-002[272]	2-7/8 "	R42R55250	R42R55250[37]	R4066365	R4090096[72]	-	-	R458634[52]	R458634
R44141608[267]	2-7/8 "	R42R55250	R42R55250[37]	R4066365	R4090096[72]	-	-	R458634[52]	R458634
23-123552-004[266]	2-7/8 "	R42R55250	R42R55250[37]	R4066365	R4090096[72]	-	-	R458634[52]	R458634
23-122527-002[272]	2-7/8 "	R42R55250	R42R55250[37]	R4066365	R4090096[72]	-	-	R458634[52]	R458634
R44141629[269]	2-7/8 "	R42R55250	R42R55250[37]	R4066365	R4090096[72]	-	-	R458634[52]	R458634
R44141628[269]	2-7/8 "	R42R55250	R42R55250[37]	R4066365	R4090096[72]	-	-	R458634[52]	R458634
R44141629[269]	2-7/8 "	R42R55250	R42R55250[37]	R4066365	R4090096[72]	-	-	R458634[52]	R458634
23-123572-004[271]	2-7/8 "	R42R55250	R42R55250[37]	R4066365	R4090096[72]	-	-	R458634[52]	R458634
23-123572-004[271]	2-7/8 "	R42R55250	R42R55250[37]	R4066365	R4090096[72]	-	-	R458634[52]	R458634
23-123572-004[271]	2-7/8 "	R42R55250	R42R55250[37]	R4066365	R4090096[72]	-	-	R458634[52]	R458634
R44141627[270]	2-7/8 "	R42R55250	R42R55250[37]	R4066365	R4090096[72]	-	-	R458634[52]	R458634
R44141858[275]	2-19/32 "	R42R55245	R42R55245	R402235118	R402238231[201]	R4111993[302]	R4122386	-	-
R44141476[268]	2-7/8 "	R429218X	R429218X[39]	R406532	R4090070[40]	R4111993[302]	R4122386	-	-
23-122920-002[273]	3-3/8 "	R42R55099	R42R55098[37]	R4066780	R4090021[201]	N/A[53]	-	-	-
23-122527-002[272]	2-7/8 "	R429218X	R429218X[39]	R406532	R4090070[40]	N/A[53]	-	-	-
23-123552-004[266]	2-7/8 "	R429218X	R429218X[39]	R406532	R4090070[40]	R4111993[302]	R4122386	-	-
23-122701-002[269]	2-7/8 "	R429218X	R429218X[39]	R406532	R4090070[40]	R4111993[302]	R4122386	-	-
23-122527-002[272]	2-7/8 "	R429218X	R429218X[39]	R406532	R4090070[40]	R4111993[302]	R4122386	-	-
23-122527-002[272]	2-7/8 "	R429218X	R429218X[39]	R406532	R4090070[40]	R4111993[302]	R4122386	-	-
23-122920-002[273]	2-19/32 "	R42R55245	R42R55245	R402235118	R402238231[201]	N/A[53]	-	-	-

267 - 10 Stud, U Shaped
268 - 5 Stud, Hat Shape
269 - 5 Stud, U Shape
270 - 5 Stud, U Shape, .766 Dia. Studs
271 - 6 Stud, Hat Shape
272 - 6 Stud, U Shape
273 - 5 Stud, U Shape, .780 Dia. Studs
275 - 5 Stud, U Shape, .656 Dia. Studs
302 - Power Brakes, Dual System

MAKE MODEL YEAR AXLE CODE AXLE WEIGHT	AXLE & BRK. TYPE	BRK. MFG.	BRAKE SIZE	FMSI	MERITOR DISC PAD OR BRAKE SHOE	MERITOR GUIDE PIN OR RETURN SPRING KIT	MERITOR CALIPER HWD. KIT OR RETURN SPRING KIT	MERITOR ADJUSTER KIT (LEFT WHEEL)	MERITOR ADJUSTER KIT (RIGHT WHEEL)
ITE(Cont.)									
190, 1900, 1910, 1950 SERIES CONVENTIONAL TILT CAB(Cont.)									
1984 S1910,S1950 Cargostar Cab Forward Code: 04145	Fd	BX		7142 - D225	MD225	R40H5010	R40H5522	NR	NR
	Fd	BX		7142 - D225	MD225	R40H5010	R40H5522	NR	NR
	Fd	BX		7108 - D184	MD184	R40H5010	R40H5519	NR	NR
	Fd	BX		7142 - D225	MD225	R40H5010	R40H5522	NR	NR
	Fd	BX		7142 - D225	MD225	R40H5010	R40H5522	NR	NR
	Fd	BX		7108 - D184	MD184	R40H5010	R40H5519	NR	NR
	Fd	BX		7142 - D225	MD225	R40H5010	R40H5522	NR	NR
	Fd	BX		7108 - D184	MD184	R40H5010	R40H5519	NR	NR
	Fd	BX		7108 - D184	MD184	R40H5010	R40H5519	NR	NR
	Fd	BX		7108 - D184	MD184	R40H5010	R40H5519	NR	NR
	Fd	BX		7142 - D225	MD225	R40H5010	R40H5522	NR	NR
	Fd	BX		7142 - D225	MD225	R40H5010	R40H5522	NR	NR
	Fd	BX		7142 - D225	MD225	R40H5010	R40H5522	NR	NR
	Fd	BX		7142 - D225	MD225	R40H5010	R40H5522	NR	NR
	Fd	BX		7108 - D184	MD184	R40H5010	R40H5519	NR	NR
	Fd	BX		7142 - D225	MD225	R40H5010	R40H5522	NR	NR
	Fd	BX		7142 - D225	MD225	R40H5010	R40H5522	NR	NR
	Fd	BX		7142 - D225	MD225	R40H5010	R40H5522	NR	NR
	Fd	BX		7108 - D184	MD184	R40H5010	R40H5519	NR	NR
	Fd	BX		7108 - D184	MD184	R40H5010	R40H5519	NR	NR
	Fd	BX		7142 - D225	MD225	R40H5010	R40H5522	NR	NR
	Fd	BX		7108 - D184	MD184	R40H5010	R40H5519	NR	NR
	Fd	BX		7108 - D184	MD184	R40H5010	R40H5519	NR	NR
	Fd	BX		7108 - D184	MD184	R40H5010	R40H5519	NR	NR
	Fd	BX		7108 - D184	MD184	R40H5010	R40H5519	NR	NR
	Fd	BX		7108 - D184	MD184	R40H5010	R40H5519	NR	NR
	Fd	BX		7108 - D184	MD184	R40H5010	R40H5519	NR	NR
	Fd	BX		7142 - D225	MD225	R40H5010	R40H5522	NR	NR
	Fd	BX		7142 - D225	MD225	R40H5010	R40H5522	NR	NR
	Fd	BX		7108 - D184	MD184	R40H5010	R40H5519	NR	NR
	Fd	BX		7142 - D225	MD225	R40H5010	R40H5522	NR	NR
	Fd	BX		7142 - D225	MD225	R40H5010	R40H5522	NR	NR
	Fd	BX		7108 - D184	MD184	R40H5010	R40H5519	NR	NR
	Fd	BX		7108 - D184	MD184	R40H5010	R40H5519	NR	NR
	Fd	BX		7142 - D225	MD225	R40H5010	R40H5522	NR	NR
	Fd	BX		7142 - D225	MD225	R40H5010	R40H5522	NR	NR
	Fd	BX		7108 - D184	MD184	R40H5010	R40H5519	NR	NR
	Fd	BX		7108 - D184	MD184	R40H5010	R40H5519	NR	NR
	Fd	BX		7142 - D225	MD225	R40H5010	R40H5522	NR	NR
	Fd	BX		7142 - D225	MD225	R40H5010	R40H5522	NR	NR
	Fd	BX		7142 - D225	MD225	R40H5010	R40H5522	NR	NR
	Fd	BX		7108 - D184	MD184	R40H5010	R40H5519	NR	NR
	Fd	BX		7108 - D184	MD184	R40H5010	R40H5519	NR	NR
	Fd	BX		7142 - D225	MD225	R40H5010	R40H5522	NR	NR
	Fd	BX		7108 - D184	MD184	R40H5010	R40H5519	NR	NR
	Fd	BX		7142 - D225	MD225	R40H5010	R40H5522	NR	NR
	Fd	BX		7142 - D225	MD225	R40H5010	R40H5522	NR	NR
	Fd	BX		7108 - D184	MD184	R40H5010	R40H5519	NR	NR
	Fd	BX		7108 - D184	MD184	R40H5010	R40H5519	NR	NR
	Fd	BX		7108 - D184	MD184	R40H5010	R40H5519	NR	NR
	Fd	BX		7108 - D184	MD184	R40H5010	R40H5519	NR	NR
	Fd	BX		7108 - D184	MD184	R40H5010	R40H5519	NR	NR
	Fd	BX		7142 - D225	MD225	R40H5010	R40H5522	NR	NR
	Fd	BX		7108 - D184	MD184	R40H5010	R40H5519	NR	NR
	Fd	BX		7108 - D184	MD184	R40H5010	R40H5519	NR	NR
	Fd	BX		7108 - D184	MD184	R40H5010	R40H5519	NR	NR
	Fd	BX		7108 - D184	MD184	R40H5010	R40H5519	NR	NR
	Fd	BX		7142 - D225	MD225	R40H5010	R40H5522	NR	NR
	Fd	BX		7142 - D225	MD225	R40H5010	R40H5522	NR	NR
	Fd	BX		7142 - D225	MD225	R40H5010	R40H5522	NR	NR
	Fd	BX		7142 - D225	MD225	R40H5010	R40H5522	NR	NR
	Fd	BX		7142 - D225	MD225	R40H5010	R40H5522	NR	NR

37 - Also available as a New unit
53 - Power Brakes
268 - 5 Stud, Hat Shape

39 - First design, uses steel pistons.
201 - Steel Piston
269 - 5 Stud, U Shape

40 - For chrome plated steel version, use R4090070P
266 - 10 Stud, Hat Shaped
271 - 6 Stud, Hat Shape

MERITOR DRUM OR ROTOR NO.	CALIPER OR CYLINDER BORE SIZE	MERITOR CALIPER OR WHEEL CYLINDER (LEFT)	MERITOR CALIPER OR WHEEL CYLINDER (RIGHT)	MERITOR CALIPER OR WHEEL CYLINDER REPAIR KIT	MERITOR CALIPER PISTON	MERITOR MASTER CYLINDER	MERITOR MASTER CYLINDER KIT	MERITOR BRAKE HOSE (LEFT)	MERITOR BRAKE HOSE (RIGHT)
									ITE(Cont.)
									190, 1900, 1910, 1950 SERIES CONVENTIONAL TILT CAB(Cont.)
R44141858[275]	2-7/8 "	R429218X	R429218X[39]	R406532	R4090070[40]	N/A[53]	-	-	-
23-122527-002[272]	2-7/8 "	R429218X	R429218X[39]	R406532	R4090070[40]	R4111993[302]	R4122386	-	-
R44141476[268]	3-3/8 "	R42R55099	R42R55098[37]	R4066780	R4090021[201]	R4111993[302]	R4122386	-	-
23-123552-004[266]	2-7/8 "	R429218X	R429218X[39]	R406532	R4090070[40]	R4111993[302]	R4122386	-	-
R44141858[275]	2-7/8 "	R429218X	R429218X[39]	R406532	R4090070[40]	R4111993[302]	R4122386	-	-
23-123552-004[266]	3-3/8 "	R42R55099	R42R55098[37]	R4066780	R4090021[201]	R4111993[302]	R4122386	-	-
23-122701-002[269]	2-7/8 "	R429218X	R429218X[39]	R406532	R4090070[40]	N/A[53]	-	-	-
R44141476[268]	2-19/32 "	R42R55245	R42R55245	R402235118	R402238231[201]	R4111993[302]	R4122386	-	-
23-123572-004[271]	3-3/8 "	R42R55099	R42R55098[37]	R4066780	R4090021[201]	N/A[53]	-	-	-
R44141858[275]	3-3/8 "	R42R55099	R42R55098[37]	R4066780	R4090021[201]	N/A[53]	-	-	-
23-122701-002[269]	2-7/8 "	R429218X	R429218X[39]	R406532	R4090070[40]	R4111993[302]	R4122386	-	-
23-122527-002[272]	2-7/8 "	R429218X	R429218X[39]	R406532	R4090070[40]	N/A[53]	-	-	-
R44141476[268]	2-7/8 "	R429218X	R429218X[39]	R406532	R4090070[40]	N/A[53]	-	-	-
R44141858[275]	2-7/8 "	R429218X	R429218X[39]	R406532	R4090070[40]	N/A[53]	-	-	-
23-122701-002[269]	2-19/32 "	R42R55245	R42R55245	R402235118	R402238231[201]	N/A[53]	-	-	-
R44141858[275]	2-7/8 "	R429218X	R429218X[39]	R406532	R4090070[40]	N/A[53]	-	-	-
23-123552-004[266]	2-7/8 "	R429218X	R429218X[39]	R406532	R4090070[40]	N/A[53]	-	-	-
23-123552-004[266]	2-7/8 "	R429218X	R429218X[39]	R406532	R4090070[40]	R4111993[302]	R4122386	-	-
23-122920-002[273]	3-3/8 "	R42R55099	R42R55098[37]	R4066780	R4090021[201]	R4111993[302]	R4122386	-	-
R44141858[275]	2-19/32 "	R42R55245	R42R55245	R402235118	R402238231[201]	N/A[53]	-	-	-
R44141476[268]	2-7/8 "	R429218X	R429218X[39]	R406532	R4090070[40]	N/A[53]	-	-	-
23-123552-004[266]	2-19/32 "	R42R55245	R42R55245	R402235118	R402238231[201]	R4111993[302]	R4122386	-	-
23-122527-002[272]	3-3/8 "	R42R55099	R42R55098[37]	R4066780	R4090021[201]	N/A[53]	-	-	-
23-123572-004[271]	2-19/32 "	R42R55245	R42R55245	R402235118	R402238231[201]	N/A[53]	-	-	-
23-122701-002[269]	3-3/8 "	R42R55099	R42R55098[37]	R4066780	R4090021[201]	N/A[53]	-	-	-
R44141476[268]	2-19/32 "	R42R55245	R42R55245	R402235118	R402238231[201]	R4111993[302]	R4122386	-	-
23-123552-004[266]	2-19/32 "	R42R55245	R42R55245	R402235118	R402238231[201]	N/A[53]	-	-	-
23-122527-002[272]	3-3/8 "	R42R55099	R42R55098[37]	R4066780	R4090021[201]	R4111993[302]	R4122386	-	-
23-123572-004[271]	2-7/8 "	R429218X	R429218X[39]	R406532	R4090070[40]	N/A[53]	-	-	-
23-123552-004[266]	2-7/8 "	R429218X	R429218X[39]	R406532	R4090070[40]	R4111993[302]	R4122386	-	-
23-123552-004[266]	2-19/32 "	R42R55245	R42R55245	R402235118	R402238231[201]	R4111993[302]	R4122386	-	-
23-123572-004[271]	2-7/8 "	R429218X	R429218X[39]	R406532	R4090070[40]	N/A[53]	-	-	-
23-122701-002[269]	2-7/8 "	R429218X	R429218X[39]	R406532	R4090070[40]	N/A[53]	-	-	-
23-122920-002[273]	2-19/32 "	R42R55245	R42R55245	R402235118	R402238231[201]	R4111993[302]	R4122386	-	-
23-123572-004[271]	2-19/32 "	R42R55245	R42R55245	R402235118	R402238231[201]	N/A[53]	-	-	-
23-123572-004[271]	2-7/8 "	R429218X	R429218X[39]	R406532	R4090070[40]	R4111993[302]	R4122386	-	-
23-122920-002[273]	2-7/8 "	R429218X	R429218X[39]	R406532	R4090070[40]	N/A[53]	-	-	-
23-122527-002[272]	2-19/32 "	R42R55245	R42R55245	R402235118	R402238231[201]	N/A[53]	-	-	-
R44141858[275]	3-3/8 "	R42R55099	R42R55098[37]	R4066780	R4090021[201]	R4111993[302]	R4122386	-	-
23-122701-002[269]	2-7/8 "	R429218X	R429218X[39]	R406532	R4090070[40]	N/A[53]	-	-	-
23-122527-002[272]	2-7/8 "	R429218X	R429218X[39]	R406532	R4090070[40]	N/A[53]	-	-	-
R44141858[275]	2-7/8 "	R429218X	R429218X[39]	R406532	R4090070[40]	R4111993[302]	R4122386	-	-
23-123572-004[271]	3-3/8 "	R42R55099	R42R55098[37]	R4066780	R4090021[201]	R4111993[302]	R4122386	-	-
23-122527-002[272]	2-19/32 "	R42R55245	R42R55245	R402235118	R402238231[201]	N/A[53]	-	-	-
R44141858[275]	2-7/8 "	R429218X	R429218X[39]	R406532	R4090070[40]	N/A[53]	-	-	-
23-122701-002[269]	2-19/32 "	R42R55245	R42R55245	R402235118	R402238231[201]	R4111993[302]	R4122386	-	-
23-122527-002[272]	2-7/8 "	R429218X	R429218X[39]	R406532	R4090070[40]	N/A[53]	-	-	-
23-122920-002[273]	2-7/8 "	R429218X	R429218X[39]	R406532	R4090070[40]	N/A[53]	-	-	-
R44141858[275]	2-19/32 "	R42R55245	R42R55245	R402235118	R402238231[201]	N/A[53]	-	-	-
23-123552-004[266]	2-19/32 "	R42R55245	R42R55245	R402235118	R402238231[201]	N/A[53]	-	-	-
23-122701-002[269]	3-3/8 "	R42R55099	R42R55098[37]	R4066780	R4090021[201]	R4111993[302]	R4122386	-	-
R44141476[268]	2-19/32 "	R42R55245	R42R55245	R402235118	R402238231[201]	N/A[53]	-	-	-
23-123572-004[271]	2-19/32 "	R42R55245	R42R55245	R402235118	R402238231[201]	R4111993[302]	R4122386	-	-
23-123572-004[271]	2-7/8 "	R429218X	R429218X[39]	R406532	R4090070[40]	R4111993[302]	R4122386	-	-
R44141476[268]	2-19/32 "	R42R55245	R42R55245	R402235118	R402238231[201]	N/A[53]	-	-	-
23-123552-004[266]	3-3/8 "	R42R55099	R42R55098[37]	R4066780	R4090021[201]	N/A[53]	-	-	-
23-123572-004[271]	2-19/32 "	R42R55245	R42R55245	R402235118	R402238231[201]	R4111993[302]	R4122386	-	-
R44141476[268]	3-3/8 "	R42R55099	R42R55098[37]	R4066780	R4090021[201]	N/A[53]	-	-	-
23-122701-002[269]	2-7/8 "	R429218X	R429218X[39]	R406532	R4090070[40]	R4111993[302]	R4122386	-	-
R44141476[268]	2-7/8 "	R429218X	R429218X[39]	R406532	R4090070[40]	R4111993[302]	R4122386	-	-
23-123572-004[271]	2-7/8 "	R429218X	R429218X[39]	R406532	R4090070[40]	R4111993[302]	R4122386	-	-
23-123572-004[271]	2-7/8 "	R429218X	R429218X[39]	R406532	R4090070[40]	N/A[53]	-	-	-
23-122920-002[273]	2-7/8 "	R429218X	R429218X[39]	R406532	R4090070[40]	R4111993[302]	R4122386	-	-

272 - 6 Stud, U Shape
273 - 5 Stud, U Shape, .780 Dia. Studs
275 - 5 Stud, U Shape, .656 Dia. Studs
302 - Power Brakes, Dual System

MAKE MODEL YEAR AXLE CODE AXLE WEIGHT	AXLE & BRK. TYPE	BRK. MFG.	BRAKE SIZE	FMSI	MERITOR DISC PAD OR BRAKE SHOE	MERITOR GUIDE PIN OR RETURN SPRING KIT	MERITOR CALIPER HWD. KIT OR RETURN SPRING KIT	MERITOR ADJUSTER KIT (LEFT WHEEL)	MERITOR ADJUSTER KIT (RIGHT WHEEL)
ITE(Cont.)									
190, 1900, 1910, 1950 SERIES CONVENTIONAL TILT CAB(Cont.)									
1984									
	Fd	BX		7108 - D184	MD184	R40H5010	R40H5519	NR	NR
	Fd	BX		7142 - D225	MD225	R40H5010	R40H5522	NR	NR
	Fd	BX		7108 - D184	MD184	R40H5010	R40H5519	NR	NR
	Fd	BX		7142 - D225	MD225	R40H5010	R40H5522	NR	NR
	Fd	BX		7142 - D225	MD225	R40H5010	R40H5522	NR	NR
	Fd	BX		7142 - D225	MD225	R40H5010	R40H5522	NR	NR
	Fd	BX		7142 - D225	MD225	R40H5010	R40H5522	NR	NR
	Fd	BX		7142 - D225	MD225	R40H5010	R40H5522	NR	NR
	Fd	BX		7142 - D225	MD225	R40H5010	R40H5522	NR	NR
	Fd	BX		7142 - D225	MD225	R40H5010	R40H5522	NR	NR
	Fd	BX		7142 - D225	MD225	R40H5010	R40H5522	NR	NR
	Fd	BX		7142 - D225	MD225	R40H5010	R40H5522	NR	NR
	Fd	BX		7142 - D225	MD225	R40H5010	R40H5522	NR	NR
	Fd	BX		7142 - D225	MD225	R40H5010	R40H5522	NR	NR
	Fd	BX		7108 - D184	MD184	R40H5010	R40H5519	NR	NR
	Fd	BX		7142 - D225	MD225	R40H5010	R40H5522	NR	NR
	Fd	BX		7142 - D225	MD225	R40H5010	R40H5522	NR	NR
S1910,S1950 Cargostar Cab Forward Code: 04237	Rd	BX		7108 - D184	MD184	R40H5010	R40H5519	NR	NR
	Rd	BX		7108 - D184	MD184	R40H5010	R40H5519	NR	NR
	Rd	BX		7108 - D184	MD184	R40H5010	R40H5519	NR	NR
	Rd	BX		7108 - D184	MD184	R40H5010	R40H5519	NR	NR
	Rd	BX		7108 - D184	MD184	R40H5010	R40H5519	NR	NR
	Rd	BX		7108 - D184	MD184	R40H5010	R40H5519	NR	NR
	Rd	BX		7108 - D184	MD184	R40H5010	R40H5519	NR	NR
	Rd	BX		7108 - D184	MD184	R40H5010	R40H5519	NR	NR
	Rd	BX		7108 - D184	MD184	R40H5010	R40H5519	NR	NR
	Rd	BX		7108 - D184	MD184	R40H5010	R40H5519	NR	NR
	Rd	BX		7108 - D184	MD184	R40H5010	R40H5519	NR	NR
	Rd	BX		7108 - D184	MD184	R40H5010	R40H5519	NR	NR
	Rd	BX		7108 - D184	MD184	R40H5010	R40H5519	NR	NR
	Rd	BX		7108 - D184	MD184	R40H5010	R40H5519	NR	NR
S1910,S1950 Cargostar Cab Forward Code: 04238	Rd	BX		7142 - D225	MD225	R40H5010	R40H5522	NR	NR
	Rd	BX		7142 - D225	MD225	R40H5010	R40H5522	NR	NR
	Rd	BX		7142 - D225	MD225	R40H5010	R40H5522	NR	NR
	Rd	BX		7142 - D225	MD225	R40H5010	R40H5522	NR	NR
	Rd	BX		7142 - D225	MD225	R40H5010	R40H5522	NR	NR
	Rd	BX		7142 - D225	MD225	R40H5010	R40H5522	NR	NR
	Rd	BX		7142 - D225	MD225	R40H5010	R40H5522	NR	NR
	Rd	BX		7142 - D225	MD225	R40H5010	R40H5522	NR	NR
	Rd	BX		7142 - D225	MD225	R40H5010	R40H5522	NR	NR
	Rd	BX		7142 - D225	MD225	R40H5010	R40H5522	NR	NR
	Rd	BX		7142 - D225	MD225	R40H5010	R40H5522	NR	NR
	Rd	BX		7142 - D225	MD225	R40H5010	R40H5522	NR	NR
	Rd	BX		7142 - D225	MD225	R40H5010	R40H5522	NR	NR
	Rd	BX		7142 - D225	MD225	R40H5010	R40H5522	NR	NR
	Rd	BX		7142 - D225	MD225	R40H5010	R40H5522	NR	NR
	Rd	BX		7142 - D225	MD225	R40H5010	R40H5522	NR	NR
	Rd	BX		7142 - D225	MD225	R40H5010	R40H5522	NR	NR
	Rd	BX		7142 - D225	MD225	R40H5010	R40H5522	NR	NR
	Rd	BX		7142 - D225	MD225	R40H5010	R40H5522	NR	NR
	Rd	BX		7142 - D225	MD225	R40H5010	R40H5522	NR	NR
	Rd	BX		7142 - D225	MD225	R40H5010	R40H5522	NR	NR
	Rd	BX		7142 - D225	MD225	R40H5010	R40H5522	NR	NR
	Rd	BX		7142 - D225	MD225	R40H5010	R40H5522	NR	NR
	Rd	BX		7142 - D225	MD225	R40H5010	R40H5522	NR	NR
	Rd	BX		7142 - D225	MD225	R40H5010	R40H5522	NR	NR
	Rd	BX		7142 - D225	MD225	R40H5010	R40H5522	NR	NR
	Rd	BX		7142 - D225	MD225	R40H5010	R40H5522	NR	NR
	Rd	BX		7142 - D225	MD225	R40H5010	R40H5522	NR	NR
	Rd	BX		7142 - D225	MD225	R40H5010	R40H5522	NR	NR
	Rd	BX		7142 - D225	MD225	R40H5010	R40H5522	NR	NR
	Rd	BX		7142 - D225	MD225	R40H5010	R40H5522	NR	NR
	Rd	BX		7142 - D225	MD225	R40H5010	R40H5522	NR	NR
	Rd	BX		7142 - D225	MD225	R40H5010	R40H5522	NR	NR
	Rd	BX		7142 - D225	MD225	R40H5010	R40H5522	NR	NR
	Rd	BX		7142 - D225	MD225	R40H5010	R40H5522	NR	NR
	Rd	BX		7142 - D225	MD225	R40H5010	R40H5522	NR	NR
	Rd	BX		7142 - D225	MD225	R40H5010	R40H5522	NR	NR
	Rd	BX		7142 - D225	MD225	R40H5010	R40H5522	NR	NR
	Rd	BX		7142 - D225	MD225	R40H5010	R40H5522	NR	NR
	Rd	BX		7142 - D225	MD225	R40H5010	R40H5522	NR	NR
	Rd	BX		7142 - D225	MD225	R40H5010	R40H5522	NR	NR
1983 S1910,S1950 Cargostar Cab Forward Code: 04145	Fd	BX		7142 - D225	MD225	R40H5010	R40H5522	NR	NR

39 - First design, uses steel pistons.
201 - Steel Piston
268 - 5 Stud, Hat Shape

40 - For chrome plated steel version, use R4090070P
266 - 10 Stud, Hat Shaped
269 - 5 Stud, U Shape

53 - Power Brakes
267 - 10 Stud, U Shaped
270 - 5 Stud, U Shape, .766 Dia. Studs

MERITOR DRUM OR ROTOR NO.	CALIPER OR CYLINDER BORE SIZE	MERITOR CALIPER OR WHEEL CYLINDER (LEFT)	MERITOR CALIPER OR WHEEL CYLINDER (RIGHT)	MERITOR CALIPER OR WHEEL CYLINDER REPAIR KIT	MERITOR CALIPER PISTON	MERITOR MASTER CYLINDER	MERITOR MASTER CYLINDER KIT	MERITOR BRAKE HOSE (LEFT)	MERITOR BRAKE HOSE (RIGHT)
									ITE(Cont.)
					190, 1900, 1910, 1950 SERIES CONVENTIONAL TILT CAB(Cont.)				
23-122527-002[272]	2-19/32 "	R42R55245	R42R55245	R402235118	R402238231[201]	R4111993[302]	R4122386	-	-
23-122920-002[273]	2-7/8 "	R429218X	R429218X[39]	R406532	R4090070[40]	R4111993[302]	R4122386	-	-
23-122527-002[272]	2-19/32 "	R42R55245	R42R55245	R402235118	R402238231[201]	R4111993[302]	R4122386	-	-
23-122920-002[273]	2-7/8 "	R429218X	R429218X[39]	R406532	R4090070[40]	R4111993[302]	R4122386	-	-
23-123572-004[271]	2-7/8 "	R429218X	R429218X[39]	R406532	R4090070[40]	N/A[53]	-	-	-
R44141858[275]	2-7/8 "	R429218X	R429218X[39]	R406532	R4090070[40]	R4111993[302]	R4122386	-	-
R44141476[268]	2-7/8 "	R429218X	R429218X[39]	R406532	R4090070[40]	N/A[53]	-	-	-
23-123552-004[266]	2-7/8 "	R429218X	R429218X[39]	R406532	R4090070[40]	N/A[53]	-	-	-
23-123552-004[266]	2-7/8 "	R429218X	R429218X[39]	R406532	R4090070[40]	N/A[53]	-	-	-
23-123572-004[271]	2-7/8 "	R429218X	R429218X[39]	R406532	R4090070[40]	R4111993[302]	R4122386	-	-
R44141476[268]	2-7/8 "	R429218X	R429218X[39]	R406532	R4090070[40]	R4111993[302]	R4122386	-	-
23-122920-002[273]	2-7/8 "	R429218X	R429218X[39]	R406532	R4090070[40]	N/A[53]	-	-	-
23-123552-004[266]	2-7/8 "	R429218X	R429218X[39]	R406532	R4090070[40]	N/A[53]	-	-	-
R44141858[275]	2-19/32 "	R42R55245	R42R55245	R402235118	R402238231[201]	R4111993[302]	R4122386	-	-
23-122527-002[272]	2-7/8 "	R429218X	R429218X[39]	R406532	R4090070[40]	R4111993[302]	R4122386	-	-
R44141858[275]	2-7/8 "	R429218X	R429218X[39]	R406532	R4090070[40]	R4111993[302]	R4122386	-	-
R44141608[267]	2-19/32 "	R42R55245	R42R55245	R40107771	R4090100P[201]	-	-	-	-
23-122527-002[272]	2-19/32 "	R42R55245	R42R55245	R402235118	R402238231[201]	-	-	-	-
23-123572-004[271]	2-19/32 "	R42R55245	R42R55245	R402235118	R402238231[201]	-	-	-	-
R44141627[270]	2-19/32 "	R42R55245	R42R55245	R40107771	R4090100P[201]	-	-	-	-
R44141627[270]	2-19/32 "	R42R55245	R42R55245	R402235118	R402238231[201]	-	-	-	-
R44141628[269]	2-19/32 "	R42R55245	R42R55245	R402235118	R402238231[201]	-	-	-	-
23-123552-004[266]	2-19/32 "	R42R55245	R42R55245	R40107771	R4090100P[201]	-	-	-	-
R44141629[269]	2-19/32 "	R42R55245	R42R55245	R402235118	R402238231[201]	-	-	-	-
R44141628[269]	2-19/32 "	R42R55245	R42R55245	R40107771	R4090100P[201]	-	-	-	-
R44141608[267]	2-19/32 "	R42R55245	R42R55245	R402235118	R402238231[201]	-	-	-	-
23-123552-004[266]	2-19/32 "	R42R55245	R42R55245	R402235118	R402238231[201]	-	-	-	-
23-122527-002[272]	2-19/32 "	R42R55245	R42R55245	R402235118	R402238231[201]	-	-	-	-
R44141629[269]	2-19/32 "	R42R55245	R42R55245	R40107771	R4090100P[201]	-	-	-	-
23-123572-004[271]	2-19/32 "	R42R55245	R42R55245	R40107771	R4090100P[201]	-	-	-	-
R44141627[270]	2-7/8 "	R429218X	R429218X[39]	R406532	R4090070[40]	-	-	-	-
R44141628[269]	2-7/8 "	R429218X	R429218X[39]	R406532	R4090070[40]	-	-	-	-
R44141628[269]	2-7/8 "	R429218X	R429218X[39]	R406532	R4090070[40]	-	-	-	-
R44141627[270]	2-7/8 "	R429218X	R429218X[39]	R406532	R4090070[40]	-	-	-	-
R44141608[267]	2-7/8 "	R429218X	R429218X[39]	R406532	R4090070[40]	-	-	-	-
R44141629[269]	2-7/8 "	R429218X	R429218X[39]	R406532	R4090070[40]	-	-	-	-
R44141628[269]	2-7/8 "	R429218X	R429218X[39]	R406532	R4090070[40]	-	-	-	-
23-122527-002[272]	2-7/8 "	R429218X	R429218X[39]	R406532	R4090070[40]	-	-	-	-
R44141629[269]	2-7/8 "	R429218X	R429218X[39]	R406532	R4090070[40]	-	-	-	-
23-123552-004[266]	2-7/8 "	R429218X	R429218X[39]	R406532	R4090070[40]	-	-	-	-
23-123572-004[271]	2-7/8 "	R429218X	R429218X[39]	R406532	R4090070[40]	-	-	-	-
R44141627[270]	2-7/8 "	R429218X	R429218X[39]	R406532	R4090070[40]	-	-	-	-
R44141628[269]	2-7/8 "	R429218X	R429218X[39]	R406532	R4090070[40]	-	-	-	-
23-122527-002[272]	2-7/8 "	R429218X	R429218X[39]	R406532	R4090070[40]	-	-	-	-
23-123572-004[271]	2-7/8 "	R429218X	R429218X[39]	R406532	R4090070[40]	-	-	-	-
23-122527-002[272]	2-7/8 "	R429218X	R429218X[39]	R406532	R4090070[40]	-	-	-	-
23-122527-002[272]	2-7/8 "	R429218X	R429218X[39]	R406532	R4090070[40]	-	-	-	-
23-123552-004[266]	2-7/8 "	R429218X	R429218X[39]	R406532	R4090070[40]	-	-	-	-
23-123552-004[266]	2-7/8 "	R429218X	R429218X[39]	R406532	R4090070[40]	-	-	-	-
23-123552-004[266]	2-7/8 "	R429218X	R429218X[39]	R406532	R4090070[40]	-	-	-	-
R44141608[267]	2-7/8 "	R429218X	R429218X[39]	R406532	R4090070[40]	-	-	-	-
R44141629[269]	2-7/8 "	R429218X	R429218X[39]	R406532	R4090070[40]	-	-	-	-
R44141608[267]	2-7/8 "	R429218X	R429218X[39]	R406532	R4090070[40]	-	-	-	-
R44141629[269]	2-7/8 "	R429218X	R429218X[39]	R406532	R4090070[40]	-	-	-	-
23-123572-004[271]	2-7/8 "	R429218X	R429218X[39]	R406532	R4090070[40]	-	-	-	-
R44141627[270]	2-7/8 "	R429218X	R429218X[39]	R406532	R4090070[40]	-	-	-	-
23-123552-004[266]	2-7/8 "	R429218X	R429218X[39]	R406532	R4090070[40]	N/A[53]	-	-	-

271 - 6 Stud, Hat Shape
272 - 6 Stud, U Shape
273 - 5 Stud, U Shape, .780 Dia. Studs
275 - 5 Stud, U Shape, .656 Dia. Studs
302 - Power Brakes, Dual System

MAKE MODEL YEAR AXLE CODE AXLE WEIGHT	AXLE & BRK. TYPE	BRK. MFG.	BRAKE SIZE	FMSI	MERITOR DISC PAD OR BRAKE SHOE	MERITOR GUIDE PIN OR RETURN SPRING KIT	MERITOR CALIPER HWD. KIT OR RETURN SPRING KIT	MERITOR ADJUSTER KIT (LEFT WHEEL)	MERITOR ADJUSTER KIT (RIGHT WHEEL)
ITE(Cont.)									
190, 1900, 1910, 1950 SERIES CONVENTIONAL TILT CAB(Cont.)									
1983									
	Fd	BX		7142 - D225	MD225	R40H5010	R40H5522	NR	NR
	Fd	BX		7142 - D225	MD225	R40H5010	R40H5522	NR	NR
	Fd	BX		7108 - D184	MD184	R40H5010	R40H5519	NR	NR
	Fd	BX		7142 - D225	MD225	R40H5010	R40H5522	NR	NR
	Fd	BX		7108 - D184	MD184	R40H5010	R40H5519	NR	NR
	Fd	BX		7142 - D225	MD225	R40H5010	R40H5522	NR	NR
	Fd	BX		7108 - D184	MD184	R40H5010	R40H5519	NR	NR
	Fd	BX		7108 - D184	MD184	R40H5010	R40H5519	NR	NR
	Fd	BX		7108 - D184	MD184	R40H5010	R40H5519	NR	NR
	Fd	BX		7108 - D184	MD184	R40H5010	R40H5519	NR	NR
	Fd	BX		7108 - D184	MD184	R40H5010	R40H5519	NR	NR
	Fd	BX		7142 - D225	MD225	R40H5010	R40H5522	NR	NR
	Fd	BX		7142 - D225	MD225	R40H5010	R40H5522	NR	NR
	Fd	BX		7142 - D225	MD225	R40H5010	R40H5522	NR	NR
	Fd	BX		7108 - D184	MD184	R40H5010	R40H5519	NR	NR
	Fd	BX		7108 - D184	MD184	R40H5010	R40H5519	NR	NR
	Fd	BX		7108 - D184	MD184	R40H5010	R40H5519	NR	NR
	Fd	BX		7142 - D225	MD225	R40H5010	R40H5522	NR	NR
	Fd	BX		7108 - D184	MD184	R40H5010	R40H5519	NR	NR
	Fd	BX		7108 - D184	MD184	R40H5010	R40H5519	NR	NR
	Fd	BX		7108 - D184	MD184	R40H5010	R40H5519	NR	NR
	Fd	BX		7142 - D225	MD225	R40H5010	R40H5522	NR	NR
	Fd	BX		7108 - D184	MD184	R40H5010	R40H5519	NR	NR
	Fd	BX		7142 - D225	MD225	R40H5010	R40H5522	NR	NR
	Fd	BX		7108 - D184	MD184	R40H5010	R40H5519	NR	NR
	Fd	BX		7142 - D225	MD225	R40H5010	R40H5522	NR	NR
	Fd	BX		7142 - D225	MD225	R40H5010	R40H5522	NR	NR
	Fd	BX		7142 - D225	MD225	R40H5010	R40H5522	NR	NR
	Fd	BX		7142 - D225	MD225	R40H5010	R40H5522	NR	NR
	Fd	BX		7108 - D184	MD184	R40H5010	R40H5519	NR	NR
	Fd	BX		7108 - D184	MD184	R40H5010	R40H5519	NR	NR
	Fd	BX		7108 - D184	MD184	R40H5010	R40H5519	NR	NR
	Fd	BX		7142 - D225	MD225	R40H5010	R40H5522	NR	NR
	Fd	BX		7142 - D225	MD225	R40H5010	R40H5522	NR	NR
	Fd	BX		7142 - D225	MD225	R40H5010	R40H5522	NR	NR
	Fd	BX		7142 - D225	MD225	R40H5010	R40H5522	NR	NR
	Fd	BX		7142 - D225	MD225	R40H5010	R40H5522	NR	NR
	Fd	BX		7108 - D184	MD184	R40H5010	R40H5519	NR	NR
	Fd	BX		7142 - D225	MD225	R40H5010	R40H5522	NR	NR
	Fd	BX		7142 - D225	MD225	R40H5010	R40H5522	NR	NR
	Fd	BX		7142 - D225	MD225	R40H5010	R40H5522	NR	NR
	Fd	BX		7142 - D225	MD225	R40H5010	R40H5522	NR	NR
	Fd	BX		7142 - D225	MD225	R40H5010	R40H5522	NR	NR
	Fd	BX		7108 - D184	MD184	R40H5010	R40H5519	NR	NR
	Fd	BX		7142 - D225	MD225	R40H5010	R40H5522	NR	NR
	Fd	BX		7108 - D184	MD184	R40H5010	R40H5519	NR	NR
	Fd	BX		7142 - D225	MD225	R40H5010	R40H5522	NR	NR
	Fd	BX		7142 - D225	MD225	R40H5010	R40H5522	NR	NR
	Fd	BX		7108 - D184	MD184	R40H5010	R40H5519	NR	NR
	Fd	BX		7108 - D184	MD184	R40H5010	R40H5519	NR	NR
	Fd	BX		7108 - D184	MD184	R40H5010	R40H5519	NR	NR
	Fd	BX		7142 - D225	MD225	R40H5010	R40H5522	NR	NR
	Fd	BX		7142 - D225	MD225	R40H5010	R40H5522	NR	NR
	Fd	BX		7108 - D184	MD184	R40H5010	R40H5519	NR	NR
	Fd	BX		7142 - D225	MD225	R40H5010	R40H5522	NR	NR
	Fd	BX		7142 - D225	MD225	R40H5010	R40H5522	NR	NR
	Fd	BX		7142 - D225	MD225	R40H5010	R40H5522	NR	NR
	Fd	BX		7142 - D225	MD225	R40H5010	R40H5522	NR	NR
	Fd	BX		7108 - D184	MD184	R40H5010	R40H5519	NR	NR
	Fd	BX		7142 - D225	MD225	R40H5010	R40H5522	NR	NR
	Fd	BX		7142 - D225	MD225	R40H5010	R40H5522	NR	NR
	Fd	BX		7142 - D225	MD225	R40H5010	R40H5522	NR	NR

37 - Also available as a New unit
53 - Power Brakes
268 - 5 Stud, Hat Shape

39 - First design, uses steel pistons.
201 - Steel Piston
269 - 5 Stud, U Shape

40 - For chrome plated steel version, use R4090070P
266 - 10 Stud, Hat Shaped
271 - 6 Stud, Hat Shape

MERITOR DRUM OR ROTOR NO.	CALIPER OR CYLINDER BORE SIZE	MERITOR CALIPER OR WHEEL CYLINDER (LEFT)	MERITOR CALIPER OR WHEEL CYLINDER (RIGHT)	MERITOR CALIPER OR WHEEL CYLINDER REPAIR KIT	MERITOR CALIPER PISTON	MERITOR MASTER CYLINDER	MERITOR MASTER CYLINDER KIT	MERITOR BRAKE HOSE (LEFT)	MERITOR BRAKE HOSE (RIGHT)
									ITE(Cont.)
190, 1900, 1910, 1950 SERIES CONVENTIONAL TILT CAB(Cont.)									
23-123552-004[266]	2-7/8 "	R429218X	R429218X[39]	R406532	R4090070[40]	R4111993[302]	R4122386	-	-
R44141858[275]	2-7/8 "	R429218X	R429218X[39]	R406532	R4090070[40]	N/A[53]	-	-	-
23-123572-004[271]	3-3/8 "	R42R55099	R42R55098[37]	R4066780	R4090021[201]	R4111993[302]	R4122386	-	-
23-122701-002[269]	2-7/8 "	R429218X	R429218X[39]	R406532	R4090070[40]	R4111993[302]	R4122386	-	-
23-122701-002[269]	3-3/8 "	R42R55099	R42R55098[37]	R4066780	R4090021[201]	N/A[53]	-	-	-
23-122920-002[273]	2-7/8 "	R429218X	R429218X[39]	R406532	R4090070[40]	N/A[53]	-	-	-
23-122920-002[273]	2-19/32 "	R42R55245	R42R55245	R402235118	R402238231[201]	R4111993[302]	R4122386	-	-
23-123572-004[271]	2-19/32 "	R42R55245	R42R55245	R402235118	R402238231[201]	N/A[53]	-	-	-
23-122920-002[273]	3-3/8 "	R42R55099	R42R55098[37]	R4066780	R4090021[201]	R4111993[302]	R4122386	-	-
23-123572-004[271]	2-19/32 "	R42R55245	R42R55245	R402235118	R402238231[201]	N/A[53]	-	-	-
23-122527-002[272]	3-3/8 "	R42R55099	R42R55098[37]	R4066780	R4090021[201]	N/A[53]	-	-	-
R44141858[275]	2-7/8 "	R429218X	R429218X[39]	R406532	R4090070[40]	N/A[53]	-	-	-
23-122527-002[272]	2-7/8 "	R429218X	R429218X[39]	R406532	R4090070[40]	N/A[53]	-	-	-
23-123572-004[271]	2-7/8 "	R429218X	R429218X[39]	R406532	R4090070[40]	R4111993[302]	R4122386	-	-
R44141858[275]	2-19/32 "	R42R55245	R42R55245	R402235118	R402238231[201]	N/A[53]	-	-	-
23-123552-004[266]	3-3/8 "	R42R55099	R42R55098[37]	R4066780	R4090021[201]	N/A[53]	-	-	-
R44141858[275]	2-19/32 "	R42R55245	R42R55245	R402235118	R402238231[201]	R4111993[302]	R4122386	-	-
23-122527-002[272]	2-7/8 "	R429218X	R429218X[39]	R406532	R4090070[40]	R4111993[302]	R4122386	-	-
23-123552-004[266]	2-19/32 "	R42R55245	R42R55245	R402235118	R402238231[201]	N/A[53]	-	-	-
R44141476[268]	3-3/8 "	R42R55099	R42R55098[37]	R4066780	R4090021[201]	R4111993[302]	R4122386	-	-
R44141858[275]	3-3/8 "	R42R55099	R42R55098[37]	R4066780	R4090021[201]	R4111993[302]	R4122386	-	-
23-122527-002[272]	2-7/8 "	R429218X	R429218X[39]	R406532	R4090070[40]	R4111993[302]	R4122386	-	-
23-123552-004[266]	2-19/32 "	R42R55245	R42R55245	R402235118	R402238231[201]	N/A[53]	-	-	-
23-122527-002[272]	2-7/8 "	R429218X	R429218X[39]	R406532	R4090070[40]	N/A[53]	-	-	-
R44141858[275]	2-19/32 "	R42R55245	R42R55245	R402235118	R402238231[201]	N/A[53]	-	-	-
23-123572-004[271]	2-7/8 "	R429218X	R429218X[39]	R406532	R4090070[40]	R4111993[302]	R4122386	-	-
23-122527-002[272]	2-7/8 "	R429218X	R429218X[39]	R406532	R4090070[40]	N/A[53]	-	-	-
R44141476[268]	2-7/8 "	R429218X	R429218X[39]	R406532	R4090070[40]	N/A[53]	-	-	-
23-123572-004[271]	2-7/8 "	R429218X	R429218X[39]	R406532	R4090070[40]	N/A[53]	-	-	-
R44141858[275]	3-3/8 "	R42R55099	R42R55098[37]	R4066780	R4090021[201]	N/A[53]	-	-	-
R44141476[268]	3-3/8 "	R42R55099	R42R55098[37]	R4066780	R4090021[201]	N/A[53]	-	-	-
23-123552-004[266]	2-19/32 "	R42R55245	R42R55245	R402235118	R402238231[201]	R4111993[302]	R4122386	-	-
23-122527-002[272]	2-7/8 "	R429218X	R429218X[39]	R406532	R4090070[40]	R4111993[302]	R4122386	-	-
R44141858[275]	2-7/8 "	R429218X	R429218X[39]	R406532	R4090070[40]	N/A[53]	-	-	-
23-122701-002[269]	2-7/8 "	R429218X	R429218X[39]	R406532	R4090070[40]	R4111993[302]	R4122386	-	-
23-122527-002[272]	2-7/8 "	R429218X	R429218X[39]	R406532	R4090070[40]	N/A[53]	-	-	-
23-123552-004[266]	2-7/8 "	R429218X	R429218X[39]	R406532	R4090070[40]	R4111993[302]	R4122386	-	-
23-122701-002[269]	2-19/32 "	R42R55245	R42R55245	R402235118	R402238231[201]	N/A[53]	-	-	-
R44141476[268]	2-7/8 "	R429218X	R429218X[39]	R406532	R4090070[40]	N/A[53]	-	-	-
23-122701-002[269]	2-7/8 "	R429218X	R429218X[39]	R406532	R4090070[40]	R4111993[302]	R4122386	-	-
R44141476[268]	2-7/8 "	R429218X	R429218X[39]	R406532	R4090070[40]	R4111993[302]	R4122386	-	-
23-122920-002[273]	2-7/8 "	R429218X	R429218X[39]	R406532	R4090070[40]	R4111993[302]	R4122386	-	-
23-122527-002[272]	3-3/8 "	R42R55099	R42R55098[37]	R4066780	R4090021[201]	R4111993[302]	R4122386	-	-
23-122920-002[273]	2-7/8 "	R429218X	R429218X[39]	R406532	R4090070[40]	R4111993[302]	R4122386	-	-
23-123552-004[266]	2-7/8 "	R429218X	R429218X[39]	R406532	R4090070[40]	N/A[53]	-	-	-
23-123572-004[271]	2-7/8 "	R429218X	R429218X[39]	R406532	R4090070[40]	R4111993[302]	R4122386	-	-
23-123572-004[271]	2-19/32 "	R42R55245	R42R55245	R402235118	R402238231[201]	R4111993[302]	R4122386	-	-
R44141476[268]	2-7/8 "	R429218X	R429218X[39]	R406532	R4090070[40]	N/A[53]	-	-	-
R44141476[268]	2-19/32 "	R42R55245	R42R55245	R402235118	R402238231[201]	N/A[53]	-	-	-
23-123552-004[266]	2-7/8 "	R429218X	R429218X[39]	R406532	R4090070[40]	N/A[53]	-	-	-
23-122701-002[269]	2-7/8 "	R429218X	R429218X[39]	R406532	R4090070[40]	N/A[53]	-	-	-
23-122527-002[272]	2-19/32 "	R42R55245	R42R55245	R402235118	R402238231[201]	R4111993[302]	R4122386	-	-
R44141858[275]	2-19/32 "	R42R55245	R42R55245	R402235118	R402238231[201]	R4111993[302]	R4122386	-	-
23-122920-002[273]	2-19/32 "	R42R55245	R42R55245	R402235118	R402238231[201]	N/A[53]	-	-	-
23-122701-002[269]	2-7/8 "	R429218X	R429218X[39]	R406532	R4090070[40]	N/A[53]	-	-	-
23-123552-004[266]	2-7/8 "	R429218X	R429218X[39]	R406532	R4090070[40]	R4111993[302]	R4122386	-	-
23-123572-004[271]	3-3/8 "	R42R55099	R42R55098[37]	R4066780	R4090021[201]	N/A[53]	-	-	-
23-123552-004[266]	2-7/8 "	R429218X	R429218X[39]	R406532	R4090070[40]	R4111993[302]	R4122386	-	-
R44141476[268]	2-7/8 "	R429218X	R429218X[39]	R406532	R4090070[40]	R4111993[302]	R4122386	-	-
23-122701-002[269]	2-7/8 "	R429218X	R429218X[39]	R406532	R4090070[40]	N/A[53]	-	-	-
23-123572-004[271]	2-7/8 "	R429218X	R429218X[39]	R406532	R4090070[40]	N/A[53]	-	-	-
R44141476[268]	2-19/32 "	R42R55245	R42R55245	R402235118	R402238231[201]	R4111993[302]	R4122386	-	-
R44141858[275]	2-7/8 "	R429218X	R429218X[39]	R406532	R4090070[40]	R4111993[302]	R4122386	-	-
23-122920-002[273]	2-7/8 "	R429218X	R429218X[39]	R406532	R4090070[40]	N/A[53]	-	-	-
R44141858[275]	2-7/8 "	R429218X	R429218X[39]	R406532	R4090070[40]	R4111993[302]	R4122386	-	-

272 - 6 Stud, U Shape
273 - 5 Stud, U Shape, .780 Dia. Studs
275 - 5 Stud, U Shape, .656 Dia. Studs
302 - Power Brakes, Dual System

MAKE MODEL YEAR AXLE CODE AXLE WEIGHT	AXLE & BRK. TYPE	BRK. MFG.	BRAKE SIZE	FMSI	MERITOR DISC PAD OR BRAKE SHOE	MERITOR GUIDE PIN OR RETURN SPRING KIT	MERITOR CALIPER HWD. KIT OR RETURN SPRING KIT	MERITOR ADJUSTER KIT (LEFT WHEEL)	MERITOR ADJUSTER KIT (RIGHT WHEEL)
ITE(Cont.)									
190, 1900, 1910, 1950 SERIES CONVENTIONAL TILT CAB(Cont.)									
1983									
	Fd	BX		7108 - D184	MD184	R40H5010	R40H5519	NR	NR
	Fd	BX		7108 - D184	MD184	R40H5010	R40H5519	NR	NR
	Fd	BX		7108 - D184	MD184	R40H5010	R40H5519	NR	NR
	Fd	BX		7108 - D184	MD184	R40H5010	R40H5519	NR	NR
	Fd	BX		7142 - D225	MD225	R40H5010	R40H5522	NR	NR
	Fd	BX		7142 - D225	MD225	R40H5010	R40H5522	NR	NR
	Fd	BX		7142 - D225	MD225	R40H5010	R40H5522	NR	NR
	Fd	BX		7108 - D184	MD184	R40H5010	R40H5519	NR	NR
	Fd	BX		7108 - D184	MD184	R40H5010	R40H5519	NR	NR
	Fd	BX		7142 - D225	MD225	R40H5010	R40H5522	NR	NR
	Fd	BX		7108 - D184	MD184	R40H5010	R40H5519	NR	NR
	Fd	BX		7108 - D184	MD184	R40H5010	R40H5519	NR	NR
	Fd	BX		7142 - D225	MD225	R40H5010	R40H5522	NR	NR
	Fd	BX		7142 - D225	MD225	R40H5010	R40H5522	NR	NR
	Fd	BX		7108 - D184	MD184	R40H5010	R40H5519	NR	NR
	Fd	BX		7108 - D184	MD184	R40H5010	R40H5519	NR	NR
	Fd	BX		7142 - D225	MD225	R40H5010	R40H5522	NR	NR
	Fd	BX		7142 - D225	MD225	R40H5010	R40H5522	NR	NR
	Fd	BX		7142 - D225	MD225	R40H5010	R40H5522	NR	NR
	Fd	BX		7142 - D225	MD225	R40H5010	R40H5522	NR	NR
	Fd	BX		7108 - D184	MD184	R40H5010	R40H5519	NR	NR
	Fd	BX		7142 - D225	MD225	R40H5010	R40H5522	NR	NR
1982									
FA139, 219	Fa	WG	15 " x 3-1/2 "	1280B - 322	R464004	R40H521	R40H9237	R40H3502	R40H3503
	Fm	WG	15 " x 3-1/2 "	1280 - 463	R700463	R40H521	R40H9201	R40H3524	R40H3524
FA98, 101, 109, 209	Fa	WG	15 " x 3 "	1245C - 321	R700321	R40H521	R40H9237	R40H3502	R40H3503
	Fm	WG	15 " x 3 "	1245A - 235	R700235	R40H521	R40H9201	R40H3524	R40H3524
RA302, 328, 341, 351	TRa	WG	15 " x 6 "	4596 - 381	R700381	R40H597	R40H9200	R40H3540	R40H3541
	TRm	WG	15 " x 6 "	4596 - 381	R700381	R40H597	R40H9200	R40H3518	R404148
RA302, 328, 351	TRa	WG	15 " x 7 "	4597 - 383	R700383	R40H597	R40H9200	N/A	N/A
	TRm	WG	15 " x 7 "	4597 - 383	R700383	R40H597	R40H9200	R40H3518	R404148
RA44, 186	Ra	WG	15 " x 6 "	4596 - 381	R700381	R40H597	R40H9200	R40H3540	R40H3541
	Ra	WG	15 " x 7 "	4597 - 383	R700383	R40H597	R40H9200	R40H3540	R40H3541
	Rm	WG	15 " x 6 "	4596 - 381	R700381	R40H597	R40H9200	R40H3518	R404148
	Rm	WG	15 " x 7 "	4597 - 383	R700383	R40H597	R40H9200	R40H3518	R404148
RA47, 192, 292	Ra	WG	16 " x 6 "	1255 - 386	N/A	R40H597	R40H9200	N/A	N/A
	Rm	WG	16 " x 6 "	1255 - 386	N/A	R40H597	R40H9200	R404149	R404150
1981									
FA139, 219	Fa	WG	15 " x 3-1/2 "	1280B - 322	R464004	R40H521	R40H9237	R40H3502	R40H3503
	Fm	WG	15 " x 3-1/2 "	1280 - 463	R700463	R40H521	R40H9201	R40H3524	R40H3524
FA98, 101, 109, 209	Fa	WG	15 " x 3 "	1245C - 321	R700321	R40H521	R40H9237	R40H3502	R40H3503
	Fm	WG	15 " x 3 "	1245A - 235	R700235	R40H521	R40H9201	R40H3524	R40H3524
RA302, 328, 341, 351	TRa	WG	15 " x 6 "	4596 - 381	R700381	R40H597	R40H9200	R40H3540	R40H3541
	TRm	WG	15 " x 6 "	4596 - 381	R700381	R40H597	R40H9200	R40H3518	R404148
RA302, 328, 351	TRa	WG	15 " x 7 "	4597 - 383	R700383	R40H597	R40H9200	N/A	N/A
	TRm	WG	15 " x 7 "	4597 - 383	R700383	R40H597	R40H9200	R40H3518	R404148
RA44, 186	Ra	WG	15 " x 6 "	4596 - 381	R700381	R40H597	R40H9200	R40H3540	R40H3541
	Ra	WG	15 " x 7 "	4597 - 383	R700383	R40H597	R40H9200	R40H3540	R40H3541
	Rm	WG	15 " x 6 "	4596 - 381	R700381	R40H597	R40H9200	R40H3518	R404148
	Rm	WG	15 " x 7 "	4597 - 383	R700383	R40H597	R40H9200	R40H3518	R404148
RA47, 192, 292	Ra	WG	16 " x 6 "	1255 - 386	N/A	R40H597	R40H9200	N/A	N/A
	Rm	WG	16 " x 6 "	1255 - 386	N/A	R40H597	R40H9200	R404149	R404150
1980									
FA139, 219	Fa	WG	15 " x 3-1/2 "	1280B - 322	R464004	R40H521	R40H9237	R40H3502	R40H3503
	Fm	WG	15 " x 3-1/2 "	1280 - 463	R700463	R40H521	R40H9201	R40H3524	R40H3524
FA98, 101, 109, 209	Fa	WG	15 " x 3 "	1245C - 321	R700321	R40H521	R40H9237	R40H3502	R40H3503
	Fm	WG	15 " x 3 "	1245A - 235	R700235	R40H521	R40H9201	R40H3524	R40H3524
RA302, 328, 341, 351	TRa	WG	15 " x 6 "	4596 - 381	R700381	R40H597	R40H9200	R40H3540	R40H3541
	TRm	WG	15 " x 6 "	4596 - 381	R700381	R40H597	R40H9200	R40H3518	R404148
RA302, 328, 351	TRa	WG	15 " x 7 "	4597 - 383	R700383	R40H597	R40H9200	N/A	N/A
	TRm	WG	15 " x 7 "	4597 - 383	R700383	R40H597	R40H9200	R40H3518	R404148
RA44, 186	Ra	WG	15 " x 6 "	4596 - 381	R700381	R40H597	R40H9200	R40H3540	R40H3541
	Ra	WG	15 " x 7 "	4597 - 383	R700383	R40H597	R40H9200	R40H3540	R40H3541

37 - Also available as a New unit
53 - Power Brakes
268 - 5 Stud, Hat Shape

39 - First design, uses steel pistons.
201 - Steel Piston
269 - 5 Stud, U Shape

40 - For chrome plated steel version, use R4090070P
266 - 10 Stud, Hat Shaped
271 - 6 Stud, Hat Shape

MERITOR DRUM OR ROTOR NO.	CALIPER OR CYLINDER BORE SIZE	MERITOR CALIPER OR WHEEL CYLINDER (LEFT)	MERITOR CALIPER OR WHEEL CYLINDER (RIGHT)	MERITOR CALIPER OR WHEEL CYLINDER REPAIR KIT	MERITOR CALIPER PISTON	MERITOR MASTER CYLINDER	MERITOR MASTER CYLINDER KIT	MERITOR BRAKE HOSE (LEFT)	MERITOR BRAKE HOSE (RIGHT)
									ITE(Cont.)
190, 1900, 1910, 1950 SERIES CONVENTIONAL TILT CAB(Cont.)									
23-122527-002[272]	2-19/32 "	R42R55245	R42R55245	R402235118	R402238231[201]	N/A[53]	-	-	-
23-122701-002[269]	2-19/32 "	R42R55245	R42R55245	R402235118	R402238231[201]	R4111993[302]	R4122386	-	-
23-122527-002[272]	2-19/32 "	R42R55245	R42R55245	R402235118	R402238231[201]	N/A[53]	-	-	-
23-122701-002[269]	3-3/8 "	R42R55099	R42R55098[37]	R4066780	R4090021[201]	R4111993[302]	R4122386	-	-
R44141858[275]	2-7/8 "	R429218X	R429218X[39]	R406532	R4090070[40]	R4111993[302]	R4122386	-	-
23-123572-004[271]	2-7/8 "	R429218X	R429218X[39]	R406532	R4090070[40]	N/A[53]	-	-	-
23-123572-004[271]	2-7/8 "	R429218X	R429218X[39]	R406532	R4090070[40]	R4111993[302]	R4122386	-	-
R44141476[268]	2-19/32 "	R42R55245	R42R55245	R402235118	R402238231[201]	R4111993[302]	R4122386	-	-
23-123552-004[266]	3-3/8 "	R42R55099	R42R55098[37]	R4066780	R4090021[201]	R4111993[302]	R4122386	-	-
23-123552-004[266]	2-7/8 "	R429218X	R429218X[39]	R406532	R4090070[40]	N/A[53]	-	-	-
23-123572-004[271]	2-19/32 "	R42R55245	R42R55245	R402235118	R402238231[201]	R4111993[302]	R4122386	-	-
R44141476[268]	2-19/32 "	R42R55245	R42R55245	R402235118	R402238231[201]	N/A[53]	-	-	-
R44141476[268]	2-7/8 "	R429218X	R429218X[39]	R406532	R4090070[40]	R4111993[302]	R4122386	-	-
23-122920-002[273]	2-7/8 "	R429218X	R429218X[39]	R406532	R4090070[40]	N/A[53]	-	-	-
23-122920-002[273]	3-3/8 "	R42R55099	R42R55098[37]	R4066780	R4090021[201]	N/A[53]	-	-	-
23-122527-002[272]	2-19/32 "	R42R55245	R42R55245	R402235118	R402238231[201]	R4111993[302]	R4122386	-	-
23-122527-002[272]	2-7/8 "	R429218X	R429218X[39]	R406532	R4090070[40]	R4111993[302]	R4122386	-	-
R44141858[275]	2-7/8 "	R429218X	R429218X[39]	R406532	R4090070[40]	R4111993[302]	R4122386	-	-
23-123572-004[271]	2-7/8 "	R429218X	R429218X[39]	R406532	R4090070[40]	N/A[53]	-	-	-
23-122920-002[273]	2-7/8 "	R429218X	R429218X[39]	R406532	R4090070[40]	R4111993[302]	R4122386	-	-
23-123552-004[266]	2-19/32 "	R42R55245	R42R55245	R402235118	R402238231[201]	R4111993[302]	R4122386	-	-
R44141858[275]	2-7/8 "	R429218X	R429218X[39]	R406532	R4090070[40]	N/A[53]	-	-	-
N/A	1-1/4 "	R4133581	R4133582	R4166923	NR	R4111294[332]	R4122346	R4577503	R4577503
N/A	1-1/4 "	R4133581	R4133582	R4166923	NR	R4111294[332]	R4122346	R4577503	R4577503
N/A	1-1/4 "	R4133581	R4133582	R4166923	NR	R4111294[332]	R4122346	R4577503	R4577503
N/A	1-1/4 "	R4133581	R4133582	R4166923	NR	R4111294[332]	R4122346	R4577503	R4577503
N/A	1-5/8 "	R4133338	R4133338	R4166689	NR	-	-	-	-
N/A	1-5/8 "	R4133338	R4133338	R4166689	NR	-	-	-	-
N/A	1-3/4 "	R4133400	R4133400	R4166917	NR	-	-	-	-
N/A	1-3/4 "	R4133400	R4133400	R4166917	NR	-	-	-	-
N/A	1-5/8 "	R4133338	R4133338	R4166689	NR	-	-	-	-
N/A	1-5/8 "	R4133338	R4133338	R4166689	NR	-	-	-	-
N/A	1-5/8 "	R4133338	R4133338	R4166689	NR	-	-	-	-
N/A	1-5/8 "	R4133338	R4133338	R4166689	NR	-	-	-	-
N/A	1-3/4 "	R4133584	R4133584	R4166897	NR	-	-	-	-
N/A	1-3/4 "	R4133584	R4133584	R4166897	NR	-	-	-	-
N/A	1-1/4 "	R4133581	R4133582	R4166923	NR	-	-	-	-
N/A	1-1/4 "	R4133581	R4133582	R4166923	NR	-	-	-	-
N/A	1-1/4 "	R4133581	R4133582	R4166923	NR	-	-	-	-
N/A	1-1/4 "	R4133581	R4133582	R4166923	NR	-	-	-	-
N/A	1-5/8 "	R4133338	R4133338	R4166689	NR	-	-	-	-
N/A	1-5/8 "	R4133338	R4133338	R4166689	NR	-	-	-	-
N/A	1-3/4 "	R4133400	R4133400	R4166917	NR	-	-	-	-
N/A	1-3/4 "	R4133400	R4133400	R4166917	NR	-	-	-	-
N/A	1-5/8 "	R4133338	R4133338	R4166689	NR	-	-	-	-
N/A	1-5/8 "	R4133338	R4133338	R4166689	NR	-	-	-	-
N/A	1-5/8 "	R4133338	R4133338	R4166689	NR	-	-	-	-
N/A	1-5/8 "	R4133338	R4133338	R4166689	NR	-	-	-	-
N/A	1-3/4 "	R4133584	R4133584	R4166897	NR	-	-	-	-
N/A	1-3/4 "	R4133584	R4133584	R4166897	NR	-	-	-	-
N/A	1-1/4 "	R4133581	R4133582	R4166923	NR	-	-	-	-
N/A	1-1/4 "	R4133581	R4133582	R4166923	NR	-	-	-	-
N/A	1-1/4 "	R4133581	R4133582	R4166923	NR	-	-	-	-
N/A	1-1/4 "	R4133581	R4133582	R4166923	NR	-	-	-	-
N/A	1-5/8 "	R4133338	R4133338	R4166689	NR	-	-	-	-
N/A	1-5/8 "	R4133338	R4133338	R4166689	NR	-	-	-	-
N/A	1-3/4 "	R4133400	R4133400	R4166917	NR	-	-	-	-
N/A	1-3/4 "	R4133400	R4133400	R4166917	NR	-	-	-	-
N/A	1-5/8 "	R4133338	R4133338	R4166689	NR	-	-	-	-
N/A	1-5/8 "	R4133338	R4133338	R4166689	NR	-	-	-	-

272 - 6 Stud, U Shape
273 - 5 Stud, U Shape, .780 Dia. Studs
275 - 5 Stud, U Shape, .656 Dia. Studs
302 - Power Brakes, Dual System
332 - Power Brakes, Hydraulic Booster

MAKE MODEL YEAR AXLE CODE AXLE WEIGHT	AXLE & BRK. TYPE	BRK. MFG.	BRAKE SIZE	FMSI	MERITOR DISC PAD OR BRAKE SHOE	MERITOR GUIDE PIN OR RETURN SPRING KIT	MERITOR CALIPER HWD. KIT OR RETURN SPRING KIT	MERITOR ADJUSTER KIT (LEFT WHEEL)	MERITOR ADJUSTER KIT (RIGHT WHEEL)
ITE(Cont.)									
190, 1900, 1910, 1950 SERIES CONVENTIONAL TILT CAB(Cont.)									
1980									
	Rm	WG	15 " x 6 "	4596 - 381	R700381	R40H597	R40H9200	R40H3518	R404148
	Rm	WG	15 " x 7 "	4597 - 383	R700383	R40H597	R40H9200	R40H3518	R404148
RA47, 192, 292	Ra	WG	16 " x 6 "	1255 - 386	N/A	R40H597	R40H9200	N/A	N/A
	Rm	WG	16 " x 6 "	1255 - 386	N/A	R40H597	R40H9200	R404149	R404150
1979									
FA139, 219	Fa	WG	15 " x 3-1/2 "	1280B - 322	R464004	R40H521	R40H9237	R40H3502	R40H3503
	Fm	WG	15 " x 3-1/2 "	1280 - 463	R700463	R40H521	R40H9201	R40H3524	R40H3524
FA98, 101, 109, 209	Fa	WG	15 " x 3 "	1245C - 321	R700321	R40H521	R40H9237	R40H3502	R40H3503
	Fm	WG	15 " x 3 "	1245A - 235	R700235	R40H521	R40H9201	R40H3524	R40H3524
RA302, 328, 341, 351	TRa	WG	15 " x 6 "	4596 - 381	R700381	R40H597	R40H9200	R40H3540	R40H3541
	TRm	WG	15 " x 6 "	4596 - 381	R700381	R40H597	R40H9200	R40H3518	R404148
RA302, 328, 351	TRa	WG	15 " x 7 "	4597 - 383	R700383	R40H597	R40H9200	N/A	N/A
	TRm	WG	15 " x 7 "	4597 - 383	R700383	R40H597	R40H9200	R40H3518	R404148
RA44, 186	Ra	WG	15 " x 6 "	4596 - 381	R700381	R40H597	R40H9200	R40H3540	R40H3541
	Ra	WG	15 " x 7 "	4597 - 383	R700383	R40H597	R40H9200	R40H3540	R40H3541
	Rm	WG	15 " x 6 "	4596 - 381	R700381	R40H597	R40H9200	R40H3518	R404148
	Rm	WG	15 " x 7 "	4597 - 383	R700383	R40H597	R40H9200	R40H3518	R404148
RA47, 192, 292	Ra	WG	16 " x 6 "	1255 - 386	N/A	R40H597	R40H9200	N/A	N/A
	Rm	WG	16 " x 6 "	1255 - 386	N/A	R40H597	R40H9200	R404149	R404150
1978									
FA139, 219	Fa	WG	15 " x 3-1/2 "	1280B - 322	R464004	R40H521	R40H9237	R40H3502	R40H3503
	Fm	WG	15 " x 3-1/2 "	1280 - 463	R700463	R40H521	R40H9201	R40H3524	R40H3524
FA98, 101, 109, 209	Fa	WG	15 " x 3 "	1245C - 321	R700321	R40H521	R40H9237	R40H3502	R40H3503
	Fm	WG	15 " x 3 "	1245A - 235	R700235	R40H521	R40H9201	R40H3524	R40H3524
RA302, 328, 341, 351	TRa	WG	15 " x 6 "	4596 - 381	R700381	R40H597	R40H9200	R40H3540	R40H3541
	TRm	WG	15 " x 6 "	4596 - 381	R700381	R40H597	R40H9200	R40H3518	R404148
RA302, 328, 351	TRa	WG	15 " x 7 "	4597 - 383	R700383	R40H597	R40H9200	N/A	N/A
	TRm	WG	15 " x 7 "	4597 - 383	R700383	R40H597	R40H9200	R40H3518	R404148
RA44, 186	Ra	WG	15 " x 6 "	4596 - 381	R700381	R40H597	R40H9200	R40H3540	R40H3541
	Ra	WG	15 " x 7 "	4597 - 383	R700383	R40H597	R40H9200	R40H3540	R40H3541
	Rm	WG	15 " x 6 "	4596 - 381	R700381	R40H597	R40H9200	R40H3518	R404148
	Rm	WG	15 " x 7 "	4597 - 383	R700383	R40H597	R40H9200	R40H3518	R404148
RA47, 192, 292	Ra	WG	16 " x 6 "	1255 - 386	N/A	R40H597	R40H9200	N/A	N/A
	Rm	WG	16 " x 6 "	1255 - 386	N/A	R40H597	R40H9200	R404149	R404150
1977									
FA139, 219	Fa	WG	15 " x 3-1/2 "	1280B - 322	R464004	R40H521	R40H9237	R40H3502	R40H3503
	Fm	WG	15 " x 3-1/2 "	1280 - 463	R700463	R40H521	R40H9201	R40H3524	R40H3524
FA98, 101, 109, 209	Fa	WG	15 " x 3 "	1245C - 321	R700321	R40H521	R40H9237	R40H3502	R40H3503
	Fm	WG	15 " x 3 "	1245A - 235	R700235	R40H521	R40H9201	R40H3524	R40H3524
RA302, 328, 341, 351	TRa	WG	15 " x 6 "	4596 - 381	R700381	R40H597	R40H9200	R40H3540	R40H3541
	TRm	WG	15 " x 6 "	4596 - 381	R700381	R40H597	R40H9200	R40H3518	R404148
RA302, 328, 351	TRa	WG	15 " x 7 "	4597 - 383	R700383	R40H597	R40H9200	NLA	NLA
	TRm	WG	15 " x 7 "	4597 - 383	R700383	R40H597	R40H9200	R40H3518	R404148
RA44, 186	Ra	WG	15 " x 6 "	4596 - 381	R700381	R40H597	R40H9200	R40H3540	R40H3541
	Ra	WG	15 " x 7 "	4597 - 383	R700383	R40H597	R40H9200	R40H3540	R40H3541
	Rm	WG	15 " x 6 "	4596 - 381	R700381	R40H597	R40H9200	R40H3518	R404148
	Rm	WG	15 " x 7 "	4597 - 383	R700383	R40H597	R40H9200	R40H3518	R404148
RA47, 192, 292	Ra	WG	16 " x 6 "	1255 - 386	N/A	R40H597	R40H9200	NLA	NLA
	Rm	WG	16 " x 6 "	1255 - 386	N/A	R40H597	R40H9200	R404149	R404150
1976									
FA211	Fm	WG	15 " x 3-1/2 "	1280 - 463	R700463	R40H521	R40H9201	R40H3524	R40H3524
FA139, 219	Fa	WG	15 " x 3-1/2 "	1280B - 322	R464004	R40H521	R40H9237	R40H3502	R40H3503
	Fm	WG	15 " x 3-1/2 "	1280 - 463	R700463	R40H521	R40H9201	R40H3524	R40H3524
FA211	Fa	WG	15 " x 3-1/2 "	1280B - 322	R464004	R40H521	R40H9237	R40H3502	R40H3503
FA91, 100	Fa	WG	15 " x 3 "	1245C - 321	R700321	R40H521	R40H9237	R40H3502	R40H3503
	Fm	WG	15 " x 3 "	1245A - 235	R700235	R40H521	R40H9201	R40H3524	R40H3524
FA98, 101, 109, 209	Fa	WG	15 " x 3 "	1245C - 321	R700321	R40H521	R40H9237	R40H3502	R40H3503
	Fm	WG	15 " x 3 "	1245A - 235	R700235	R40H521	R40H9201	R40H3524	R40H3524
RA192	Ra	WG	16 " x 6 "	1255 - 386	N/A	R40H597	R40H9200	NLA	NLA
	Rm	WG	16 " x 6 "	1255 - 386	N/A	R40H597	R40H9200	R404149	R404150
RA302, 328, 341, 351	TRa	WG	15 " x 6 "	4596 - 381	R700381	R40H597	R40H9200	R40H3540	R40H3541

MERITOR DRUM OR ROTOR NO.	CALIPER OR CYLINDER BORE SIZE	MERITOR CALIPER OR WHEEL CYLINDER (LEFT)	MERITOR CALIPER OR WHEEL CYLINDER (RIGHT)	MERITOR CALIPER OR WHEEL CYLINDER REPAIR KIT	MERITOR CALIPER PISTON	MERITOR MASTER CYLINDER	MERITOR MASTER CYLINDER KIT	MERITOR BRAKE HOSE (LEFT)	MERITOR BRAKE HOSE (RIGHT)
									ITE(Cont.)
190, 1900, 1910, 1950 SERIES CONVENTIONAL TILT CAB(Cont.)									
N/A	1-5/8 "	R4133338	R4133338	R4166689	NR	-	-	-	-
N/A	1-5/8 "	R4133338	R4133338	R4166689	NR	-	-	-	-
N/A	1-3/4 "	R4133584	R4133584	R4166897	NR	-	-	-	-
N/A	1-3/4 "	R4133584	R4133584	R4166897	NR	-	-	-	-
N/A	1-1/4 "	R4133581	R4133582	R4166923	NR	-	-	-	-
N/A	1-1/4 "	R4133581	R4133582	R4166923	NR	-	-	-	-
N/A	1-1/4 "	R4133581	R4133582	R4166923	NR	-	-	-	-
N/A	1-1/4 "	R4133581	R4133582	R4166923	NR	-	-	-	-
N/A	1-5/8 "	R4133338	R4133338	R4166689	NR	-	-	-	-
N/A	1-5/8 "	R4133338	R4133338	R4166689	NR	-	-	-	-
N/A	1-3/4 "	R4133400	R4133400	R4166917	NR	-	-	-	-
N/A	1-3/4 "	R4133400	R4133400	R4166917	NR	-	-	-	-
N/A	1-5/8 "	R4133338	R4133338	R4166689	NR	-	-	-	-
N/A	1-5/8 "	R4133338	R4133338	R4166689	NR	-	-	-	-
N/A	1-5/8 "	R4133338	R4133338	R4166689	NR	-	-	-	-
N/A	1-5/8 "	R4133338	R4133338	R4166689	NR	-	-	-	-
N/A	1-3/4 "	R4133584	R4133584	R4166897	NR	-	-	-	-
N/A	1-3/4 "	R4133584	R4133584	R4166897	NR	-	-	-	-
N/A	1-1/4 "	R4133581	R4133582	R4166923	NR	-	-	-	-
N/A	1-1/4 "	R4133581	R4133582	R4166923	NR	-	-	-	-
N/A	1-1/4 "	R4133581	R4133582	R4166923	NR	-	-	-	-
N/A	1-1/4 "	R4133581	R4133582	R4166923	NR	-	-	-	-
N/A	1-5/8 "	R4133338	R4133338	R4166689	NR	-	-	-	-
N/A	1-5/8 "	R4133338	R4133338	R4166689	NR	-	-	-	-
N/A	1-3/4 "	R4133400	R4133400	R4166917	NR	-	-	-	-
N/A	1-3/4 "	R4133400	R4133400	R4166917	NR	-	-	-	-
N/A	1-5/8 "	R4133338	R4133338	R4166689	NR	-	-	-	-
N/A	1-5/8 "	R4133338	R4133338	R4166689	NR	-	-	-	-
N/A	1-5/8 "	R4133338	R4133338	R4166689	NR	-	-	-	-
N/A	1-5/8 "	R4133338	R4133338	R4166689	NR	-	-	-	-
N/A	1-3/4 "	R4133584	R4133584	R4166897	NR	-	-	-	-
N/A	1-3/4 "	R4133584	R4133584	R4166897	NR	-	-	-	-
-	1-1/4 "	R4133581	R4133582	R4166923	NR	-	-	-	-
-	1-1/4 "	R4133581	R4133582	R4166923	NR	-	-	-	-
-	1-1/4 "	R4133581	R4133582	R4166923	NR	-	-	-	-
-	1-1/4 "	R4133581	R4133582	R4166923	NR	-	-	-	-
-	1-5/8 "	R4133338	R4133338	R4166689	NR	-	-	-	-
-	1-5/8 "	R4133338	R4133338	R4166689	NR	-	-	-	-
-	1-3/4 "	R4133400	R4133400	R4166917	NR	-	-	-	-
-	1-3/4 "	R4133400	R4133400	R4166917	NR	-	-	-	-
-	1-5/8 "	R4133338	R4133338	R4166689	NR	-	-	-	-
-	1-5/8 "	R4133338	R4133338	R4166689	NR	-	-	-	-
-	1-5/8 "	R4133338	R4133338	R4166689	NR	-	-	-	-
-	1-5/8 "	R4133338	R4133338	R4166689	NR	-	-	-	-
-	1-3/4 "	R4133584	R4133584	R4166897	NR	-	-	-	-
-	1-3/4 "	R4133584	R4133584	R4166897	NR	-	-	-	-
-	1-1/4 "	R4133581	R4133582	R4166923	NR	-	-	-	-
-	1-1/4 "	R4133581	R4133582	R4166923	NR	-	-	-	-
-	1-1/4 "	R4133581	R4133582	R4166923	NR	-	-	-	-
-	1-1/4 "	R4133581	R4133582	R4166923	NR	-	-	-	-
-	1-1/4 "	R4133581	R4133582	R4166923	NR	-	-	-	-
-	1-1/4 "	R4133581	R4133582	R4166923	NR	-	-	-	-
-	1-1/4 "	R4133581	R4133582	R4166923	NR	-	-	-	-
-	1-1/4 "	R4133581	R4133582	R4166923	NR	-	-	-	-
-	1-3/4 "	R4133584	R4133584	R4166897	NR	-	-	-	-
-	1-3/4 "	R4133584	R4133584	R4166897	NR	-	-	-	-
-	1-5/8 "	R4133338	R4133338	R4166689	NR	-	-	-	-

MAKE MODEL YEAR AXLE CODE AXLE WEIGHT	AXLE & BRK. TYPE	BRK. MFG.	BRAKE SIZE	FMSI	MERITOR DISC PAD OR BRAKE SHOE	MERITOR GUIDE PIN OR RETURN SPRING KIT	MERITOR CALIPER HWD. KIT OR RETURN SPRING KIT	MERITOR ADJUSTER KIT (LEFT WHEEL)	MERITOR ADJUSTER KIT (RIGHT WHEEL)
ITE(Cont.)									
190, 1900, 1910, 1950 SERIES CONVENTIONAL TILT CAB(Cont.)									
1976									
RA302, 328, 341, 351	TRm	WG	15 " x 6 "	4596 - 381	R700381	R40H597	R40H9200	R40H3518	R404148
RA302, 328, 351	TRa	WG	15 " x 7 "	4597 - 383	R700383	R40H597	R40H9200	NLA	NLA
	TRm	WG	15 " x 7 "	4597 - 383	R700383	R40H597	R40H9200	R40H3518	R404148
RA341	TRa	WG	15 " x 5 "	1252 - 346	R700346	R40H597	R40H9200	R40H3540	R40H3541
	TRm	WG	15 " x 5 "	1252 - 346	R700346	R40H597	R40H9200	R40H3518	R404148
RA44, 186	Ra	WG	15 " x 6 "	4596 - 381	R700381	R40H597	R40H9200	R40H3540	R40H3541
	Ra	WG	15 " x 7 "	4597 - 383	R700383	R40H597	R40H9200	R40H3540	R40H3541
	Ra	WG	15 " x 7 "	4597 - 383	R700383	R40H597	R40H9200	R40H3540	R40H3541
	Rm	WG	15 " x 6 "	4596 - 381	R700381	R40H597	R40H9200	R40H3518	R404148
	Rm	WG	15 " x 7 "	4597 - 383	R700383	R40H597	R40H9200	R40H3518	R404148
	Rm	WG	15 " x 7 "	4597 - 383	R700383	R40H597	R40H9200	R40H3518	R404148
RA47, 192, 292	Ra	WG	16 " x 6 "	1255 - 386	N/A	R40H597	R40H9200	NLA	NLA
	Rm	WG	16 " x 6 "	1255 - 386	N/A	R40H597	R40H9200	R404149	R404150
1975									
FA211	Fm	WG	15 " x 3-1/2 "	1280 - 463	R700463	R40H521	R40H9201	R40H3524	R40H3524
FA139, 219	Fa	WG	15 " x 3-1/2 "	1280B - 322	R464004	R40H521	R40H9237	R40H3502	R40H3503
	Fm	WG	15 " x 3-1/2 "	1280 - 463	R700463	R40H521	R40H9201	R40H3524	R40H3524
FA211	Fa	WG	15 " x 3-1/2 "	1280B - 322	R464004	R40H521	R40H9237	R40H3502	R40H3503
FA91, 100	Fa	WG	15 " x 3 "	1245C - 321	R700321	R40H521	R40H9237	R40H3502	R40H3503
	Fm	WG	15 " x 3 "	1245A - 235	R700235	R40H521	R40H9201	R40H3524	R40H3524
FA98, 101, 109, 209	Fa	WG	15 " x 3 "	1245C - 321	R700321	R40H521	R40H9237	R40H3502	R40H3503
	Fm	WG	15 " x 3 "	1245A - 235	R700235	R40H521	R40H9201	R40H3524	R40H3524
RA192	Ra	WG	16 " x 6 "	1255 - 386	N/A	R40H597	R40H9200	NLA	NLA
	Rm	WG	16 " x 6 "	1255 - 386	N/A	R40H597	R40H9200	R404149	R404150
RA302, 328, 341, 351	TRa	WG	15 " x 6 "	4596 - 381	R700381	R40H597	R40H9200	R40H3540	R40H3541
	TRm	WG	15 " x 6 "	4596 - 381	R700381	R40H597	R40H9200	R40H3518	R404148
RA302, 328, 351	TRa	WG	15 " x 7 "	4597 - 383	R700383	R40H597	R40H9200	NLA	NLA
	TRm	WG	15 " x 7 "	4597 - 383	R700383	R40H597	R40H9200	R40H3518	R404148
RA341	TRa	WG	15 " x 5 "	1252 - 346	R700346	R40H597	R40H9200	R40H3540	R40H3541
	TRm	WG	15 " x 5 "	1252 - 346	R700346	R40H597	R40H9200	R40H3518	R404148
RA44, 186	Ra	WG	15 " x 6 "	4596 - 381	R700381	R40H597	R40H9200	R40H3540	R40H3541
	Ra	WG	15 " x 7 "	4597 - 383	R700383	R40H597	R40H9200	R40H3540	R40H3541
	Ra	WG	15 " x 7 "	4597 - 383	R700383	R40H597	R40H9200	R40H3540	R40H3541
	Rm	WG	15 " x 6 "	4596 - 381	R700381	R40H597	R40H9200	R40H3518	R404148
	Rm	WG	15 " x 7 "	4597 - 383	R700383	R40H597	R40H9200	R40H3518	R404148
	Rm	WG	15 " x 7 "	4597 - 383	R700383	R40H597	R40H9200	R40H3518	R404148
RA47, 192, 292	Ra	WG	16 " x 6 "	1255 - 386	N/A	R40H597	R40H9200	NLA	NLA
	Rm	WG	16 " x 6 "	1255 - 386	N/A	R40H597	R40H9200	R404149	R404150
1974									
FA211	Fm	WG	15 " x 3-1/2 "	1280 - 463	R700463	R40H521	R40H9201	R40H3524	R40H3524
FA139, 219	Fa	WG	15 " x 3-1/2 "	1280B - 322	R464004	R40H521	R40H9237	R40H3502	R40H3503
	Fm	WG	15 " x 3-1/2 "	1280 - 463	R700463	R40H521	R40H9201	R40H3524	R40H3524
FA211	Fa	WG	15 " x 3-1/2 "	1280B - 322	R464004	R40H521	R40H9237	R40H3502	R40H3503
FA91, 100	Fa	WG	15 " x 3 "	1245C - 321	R700321	R40H521	R40H9237	R40H3502	R40H3503
	Fm	WG	15 " x 3 "	1245A - 235	R700235	R40H521	R40H9201	R40H3524	R40H3524
FA98, 101, 109, 209	Fa	WG	15 " x 3 "	1245C - 321	R700321	R40H521	R40H9237	R40H3502	R40H3503
	Fm	WG	15 " x 3 "	1245A - 235	R700235	R40H521	R40H9201	R40H3524	R40H3524
RA192	Ra	WG	16 " x 6 "	1255 - 386	N/A	R40H597	R40H9200	NLA	NLA
	Rm	WG	16 " x 6 "	1255 - 386	N/A	R40H597	R40H9200	R404149	R404150
RA302, 328, 341, 351	TRa	WG	15 " x 6 "	4596 - 381	R700381	R40H597	R40H9200	R40H3540	R40H3541
	TRm	WG	15 " x 6 "	4596 - 381	R700381	R40H597	R40H9200	R40H3518	R404148
RA302, 328, 351	TRa	WG	15 " x 7 "	4597 - 383	R700383	R40H597	R40H9200	NLA	NLA
	TRm	WG	15 " x 7 "	4597 - 383	R700383	R40H597	R40H9200	R40H3518	R404148
RA341	TRa	WG	15 " x 5 "	1252 - 346	R700346	R40H597	R40H9200	R40H3540	R40H3541
	TRm	WG	15 " x 5 "	1252 - 346	R700346	R40H597	R40H9200	R40H3518	R404148
RA44, 186	Ra	WG	15 " x 6 "	4596 - 381	R700381	R40H597	R40H9200	R40H3540	R40H3541
	Ra	WG	15 " x 7 "	4597 - 383	R700383	R40H597	R40H9200	R40H3540	R40H3541
	Ra	WG	15 " x 7 "	4597 - 383	R700383	R40H597	R40H9200	R40H3540	R40H3541
	Rm	WG	15 " x 6 "	4596 - 381	R700381	R40H597	R40H9200	R40H3518	R404148
	Rm	WG	15 " x 7 "	4597 - 383	R700383	R40H597	R40H9200	R40H3518	R404148

MERITOR DRUM OR ROTOR NO.	CALIPER OR CYLINDER BORE SIZE	MERITOR CALIPER OR WHEEL CYLINDER (LEFT)	MERITOR CALIPER OR WHEEL CYLINDER (RIGHT)	MERITOR CALIPER OR WHEEL CYLINDER REPAIR KIT	MERITOR CALIPER PISTON	MERITOR MASTER CYLINDER	MERITOR MASTER CYLINDER KIT	MERITOR BRAKE HOSE (LEFT)	MERITOR BRAKE HOSE (RIGHT)
									ITE(Cont.)
					190, 1900, 1910, 1950 SERIES CONVENTIONAL TILT CAB(Cont.)				
-	1-5/8 "	R4133338	R4133338	R4166689	NR	-	-	-	-
-	1-3/4 "	R4133400	R4133400	R4166917	NR	-	-	-	-
-	1-3/4 "	R4133400	R4133400	R4166917	NR	-	-	-	-
-	1-5/8 "	R4133338	R4133338	R4166689	NR	-	-	-	-
-	1-5/8 "	R4133338	R4133338	R4166689	NR	-	-	-	-
-	1-5/8 "	R4133338	R4133338	R4166689	NR	-	-	-	-
-	1-3/4 "	R4133400	R4133400	R4166917	NR	-	-	-	-
-	1-5/8 "	R4133338	R4133338	R4166689	NR	-	-	-	-
-	1-5/8 "	R4133338	R4133338	R4166689	NR	-	-	-	-
-	1-3/4 "	R4133400	R4133400	R4166917	NR	-	-	-	-
-	1-5/8 "	R4133338	R4133338	R4166689	NR	-	-	-	-
-	1-3/4 "	R4133584	R4133584	R4166897	NR	-	-	-	-
-	1-3/4 "	R4133584	R4133584	R4166897	NR	-	-	-	-
-	1-1/4 "	R4133581	R4133582	R4166923	NR	-	-	-	-
-	1-1/4 "	R4133581	R4133582	R4166923	NR	-	-	-	-
-	1-1/4 "	R4133581	R4133582	R4166923	NR	-	-	-	-
-	1-1/4 "	R4133581	R4133582	R4166923	NR	-	-	-	-
-	1-1/4 "	R4133581	R4133582	R4166923	NR	-	-	-	-
-	1-1/4 "	R4133581	R4133582	R4166923	NR	-	-	-	-
-	1-1/4 "	R4133581	R4133582	R4166923	NR	-	-	-	-
-	1-1/4 "	R4133581	R4133582	R4166923	NR	-	-	-	-
-	1-3/4 "	R4133584	R4133584	R4166897	NR	-	-	-	-
-	1-3/4 "	R4133584	R4133584	R4166897	NR	-	-	-	-
-	1-5/8 "	R4133338	R4133338	R4166689	NR	-	-	-	-
-	1-5/8 "	R4133338	R4133338	R4166689	NR	-	-	-	-
-	1-3/4 "	R4133400	R4133400	R4166917	NR	-	-	-	-
-	1-3/4 "	R4133400	R4133400	R4166917	NR	-	-	-	-
-	1-5/8 "	R4133338	R4133338	R4166689	NR	-	-	-	-
-	1-5/8 "	R4133338	R4133338	R4166689	NR	-	-	-	-
-	1-5/8 "	R4133338	R4133338	R4166689	NR	-	-	-	-
-	1-5/8 "	R4133338	R4133338	R4166689	NR	-	-	-	-
-	1-3/4 "	R4133400	R4133400	R4166917	NR	-	-	-	-
-	1-5/8 "	R4133338	R4133338	R4166689	NR	-	-	-	-
-	1-5/8 "	R4133338	R4133338	R4166689	NR	-	-	-	-
-	1-5/8 "	R4133338	R4133338	R4166689	NR	-	-	-	-
-	1-3/4 "	R4133400	R4133400	R4166917	NR	-	-	-	-
-	1-3/4 "	R4133584	R4133584	R4166897	NR	-	-	-	-
-	1-3/4 "	R4133584	R4133584	R4166897	NR	-	-	-	-
-	1-1/4 "	R4133581	R4133582	R4166923	NR	-	-	-	-
-	1-1/4 "	R4133581	R4133582	R4166923	NR	-	-	-	-
-	1-1/4 "	R4133581	R4133582	R4166923	NR	-	-	-	-
-	1-1/4 "	R4133581	R4133582	R4166923	NR	-	-	-	-
-	1-1/4 "	R4133581	R4133582	R4166923	NR	-	-	-	-
-	1-1/4 "	R4133581	R4133582	R4166923	NR	-	-	-	-
-	1-1/4 "	R4133581	R4133582	R4166923	NR	-	-	-	-
-	1-1/4 "	R4133581	R4133582	R4166923	NR	-	-	-	-
-	1-3/4 "	R4133584	R4133584	R4166897	NR	-	-	-	-
-	1-3/4 "	R4133584	R4133584	R4166897	NR	-	-	-	-
-	1-5/8 "	R4133338	R4133338	R4166689	NR	-	-	-	-
-	1-5/8 "	R4133338	R4133338	R4166689	NR	-	-	-	-
-	1-3/4 "	R4133400	R4133400	R4166917	NR	-	-	-	-
-	1-3/4 "	R4133400	R4133400	R4166917	NR	-	-	-	-
-	1-5/8 "	R4133338	R4133338	R4166689	NR	-	-	-	-
-	1-5/8 "	R4133338	R4133338	R4166689	NR	-	-	-	-
-	1-5/8 "	R4133338	R4133338	R4166689	NR	-	-	-	-
-	1-5/8 "	R4133338	R4133338	R4166689	NR	-	-	-	-
-	1-3/4 "	R4133400	R4133400	R4166917	NR	-	-	-	-
-	1-5/8 "	R4133338	R4133338	R4166689	NR	-	-	-	-
-	1-3/4 "	R4133400	R4133400	R4166917	NR	-	-	-	-

MAKE MODEL YEAR AXLE CODE AXLE WEIGHT	AXLE & BRK. TYPE	BRK. MFG.	BRAKE SIZE	FMSI	MERITOR DISC PAD OR BRAKE SHOE	MERITOR GUIDE PIN OR RETURN SPRING KIT	MERITOR CALIPER HWD. KIT OR RETURN SPRING KIT	MERITOR ADJUSTER KIT (LEFT WHEEL)	MERITOR ADJUSTER KIT (RIGHT WHEEL)
ITE(Cont.)									
190, 1900, 1910, 1950 SERIES CONVENTIONAL TILT CAB(Cont.)									
1974									
	Rm	WG	15 " x 7 "	4597 - 383	R700383	R40H597	R40H9200	R40H3518	R404148
RA47, 192, 292	Ra	WG	16 " x 6 "	1255 - 386	N/A	R40H597	R40H9200	NLA	NLA
	Rm	WG	16 " x 6 "	1255 - 386	N/A	R40H597	R40H9200	R404149	R404150
1973									
FA211	Fm	WG	15 " x 3-1/2 "	1280 - 463	R700463	R40H521	R40H9201	R40H3524	R40H3524
FA139, 219	Fa	WG	15 " x 3-1/2 "	1280B - 322	R464004	R40H521	R40H9237	R40H3502	R40H3503
	Fm	WG	15 " x 3-1/2 "	1280 - 463	R700463	R40H521	R40H9201	R40H3524	R40H3524
FA211	Fa	WG	15 " x 3-1/2 "	1280B - 322	R464004	R40H521	R40H9237	R40H3502	R40H3503
FA91, 100	Fa	WG	15 " x 3 "	1245C - 321	R700321	R40H521	R40H9237	R40H3502	R40H3503
	Fm	WG	15 " x 3 "	1245A - 235	R700235	R40H521	R40H9201	R40H3524	R40H3524
FA98, 101, 109, 209	Fa	WG	15 " x 3 "	1245C - 321	R700321	R40H521	R40H9237	R40H3502	R40H3503
	Fm	WG	15 " x 3 "	1245A - 235	R700235	R40H521	R40H9201	R40H3524	R40H3524
RA192	Ra	WG	16 " x 6 "	1255 - 386	N/A	R40H597	R40H9200	NLA	NLA
	Rm	WG	16 " x 6 "	1255 - 386	N/A	R40H597	R40H9200	R404149	R404150
RA302, 328, 341, 351	TRa	WG	15 " x 6 "	4596 - 381	R700381	R40H597	R40H9200	R40H3540	R40H3541
	TRm	WG	15 " x 6 "	4596 - 381	R700381	R40H597	R40H9200	R40H3518	R404148
RA302, 328, 351	TRa	WG	15 " x 7 "	4597 - 383	R700383	R40H597	R40H9200	NLA	NLA
	TRm	WG	15 " x 7 "	4597 - 383	R700383	R40H597	R40H9200	R40H3518	R404148
RA341	TRa	WG	15 " x 5 "	1252 - 346	R700346	R40H597	R40H9200	R40H3540	R40H3541
	TRm	WG	15 " x 5 "	1252 - 346	R700346	R40H597	R40H9200	R40H3518	R404148
RA44, 186	Ra	WG	15 " x 6 "	4596 - 381	R700381	R40H597	R40H9200	R40H3540	R40H3541
	Ra	WG	15 " x 7 "	4597 - 383	R700383	R40H597	R40H9200	R40H3540	R40H3541
	Ra	WG	15 " x 7 "	4597 - 383	R700383	R40H597	R40H9200	R40H3540	R40H3541
	Rm	WG	15 " x 6 "	4596 - 381	R700381	R40H597	R40H9200	R40H3518	R404148
	Rm	WG	15 " x 7 "	4597 - 383	R700383	R40H597	R40H9200	R40H3518	R404148
	Rm	WG	15 " x 7 "	4597 - 383	R700383	R40H597	R40H9200	R40H3518	R404148
RA47, 192, 292	Ra	WG	16 " x 6 "	1255 - 386	N/A	R40H597	R40H9200	NLA	NLA
	Rm	WG	16 " x 6 "	1255 - 386	N/A	R40H597	R40H9200	R404149	R404150
1972									
FA211	Fm	WG	15 " x 3-1/2 "	1280 - 463	R700463	R40H521	R40H9201	R40H3524	R40H3524
FA139, 219	Fa	WG	15 " x 3-1/2 "	1280B - 322	R464004	R40H521	R40H9237	R40H3502	R40H3503
	Fm	WG	15 " x 3-1/2 "	1280 - 463	R700463	R40H521	R40H9201	R40H3524	R40H3524
FA211	Fa	WG	15 " x 3-1/2 "	1280B - 322	R464004	R40H521	R40H9237	R40H3502	R40H3503
FA91, 100	Fa	WG	15 " x 3 "	1245C - 321	R700321	R40H521	R40H9237	R40H3502	R40H3503
	Fm	WG	15 " x 3 "	1245A - 235	R700235	R40H521	R40H9201	R40H3524	R40H3524
FA98, 101, 109, 209	Fa	WG	15 " x 3 "	1245C - 321	R700321	R40H521	R40H9237	R40H3502	R40H3503
	Fm	WG	15 " x 3 "	1245A - 235	R700235	R40H521	R40H9201	R40H3524	R40H3524
RA192	Ra	WG	16 " x 6 "	1255 - 386	N/A	R40H597	R40H9200	NLA	NLA
	Rm	WG	16 " x 6 "	1255 - 386	N/A	R40H597	R40H9200	R404149	R404150
RA302, 328, 341, 351	TRa	WG	15 " x 6 "	4596 - 381	R700381	R40H597	R40H9200	R40H3540	R40H3541
	TRm	WG	15 " x 6 "	4596 - 381	R700381	R40H597	R40H9200	R40H3518	R404148
RA302, 328, 351	TRa	WG	15 " x 7 "	4597 - 383	R700383	R40H597	R40H9200	NLA	NLA
	TRm	WG	15 " x 7 "	4597 - 383	R700383	R40H597	R40H9200	R40H3518	R404148
RA341	TRa	WG	15 " x 5 "	1252 - 346	R700346	R40H597	R40H9200	R40H3540	R40H3541
	TRm	WG	15 " x 5 "	1252 - 346	R700346	R40H597	R40H9200	R40H3518	R404148
RA44, 186	Ra	WG	15 " x 6 "	4596 - 381	R700381	R40H597	R40H9200	R40H3540	R40H3541
	Ra	WG	15 " x 7 "	4597 - 383	R700383	R40H597	R40H9200	R40H3540	R40H3541
	Ra	WG	15 " x 7 "	4597 - 383	R700383	R40H597	R40H9200	R40H3540	R40H3541
	Rm	WG	15 " x 6 "	4596 - 381	R700381	R40H597	R40H9200	R40H3518	R404148
	Rm	WG	15 " x 7 "	4597 - 383	R700383	R40H597	R40H9200	R40H3518	R404148
	Rm	WG	15 " x 7 "	4597 - 383	R700383	R40H597	R40H9200	R40H3518	R404148
RA47, 192, 292	Ra	WG	16 " x 6 "	1255 - 386	N/A	R40H597	R40H9200	NLA	NLA
	Rm	WG	16 " x 6 "	1255 - 386	N/A	R40H597	R40H9200	R404149	R404150
1971									
FA211	Fm	WG	15 " x 3-1/2 "	1280 - 463	R700463	R40H521	R40H9201	R40H3524	R40H3524
FA139, 219	Fa	WG	15 " x 3-1/2 "	1280B - 322	R464004	R40H521	R40H9237	R40H3502	R40H3503
	Fm	WG	15 " x 3-1/2 "	1280 - 463	R700463	R40H521	R40H9201	R40H3524	R40H3524
FA211	Fa	WG	15 " x 3-1/2 "	1280B - 322	R464004	R40H521	R40H9237	R40H3502	R40H3503
FA91, 100	Fa	WG	15 " x 3 "	1245C - 321	R700321	R40H521	R40H9237	R40H3502	R40H3503

MERITOR DRUM OR ROTOR NO.	CALIPER OR CYLINDER BORE SIZE	MERITOR CALIPER OR WHEEL CYLINDER (LEFT)	MERITOR CALIPER OR WHEEL CYLINDER (RIGHT)	MERITOR CALIPER OR WHEEL CYLINDER REPAIR KIT	MERITOR CALIPER PISTON	MERITOR MASTER CYLINDER	MERITOR MASTER CYLINDER KIT	MERITOR BRAKE HOSE (LEFT)	MERITOR BRAKE HOSE (RIGHT)
									ITE(Cont.)
									190, 1900, 1910, 1950 SERIES CONVENTIONAL TILT CAB(Cont.)
-	1-5/8 "	R4133338	R4133338	R4166689	NR	-	-	-	-
-	1-3/4 "	R4133584	R4133584	R4166897	NR	-	-	-	-
-	1-3/4 "	R4133584	R4133584	R4166897	NR	-	-	-	-
-	1-1/4 "	R4133581	R4133582	R4166923	NR	-	-	-	-
-	1-1/4 "	R4133581	R4133582	R4166923	NR	-	-	-	-
-	1-1/4 "	R4133581	R4133582	R4166923	NR	-	-	-	-
-	1-1/4 "	R4133581	R4133582	R4166923	NR	-	-	-	-
-	1-1/4 "	R4133581	R4133582	R4166923	NR	-	-	-	-
-	1-1/4 "	R4133581	R4133582	R4166923	NR	-	-	-	-
-	1-1/4 "	R4133581	R4133582	R4166923	NR	-	-	-	-
-	1-1/4 "	R4133581	R4133582	R4166923	NR	-	-	-	-
-	1-3/4 "	R4133584	R4133584	R4166897	NR	-	-	-	-
-	1-3/4 "	R4133584	R4133584	R4166897	NR	-	-	-	-
-	1-5/8 "	R4133338	R4133338	R4166689	NR	-	-	-	-
-	1-5/8 "	R4133338	R4133338	R4166689	NR	-	-	-	-
-	1-3/4 "	R4133400	R4133400	R4166917	NR	-	-	-	-
-	1-3/4 "	R4133400	R4133400	R4166917	NR	-	-	-	-
-	1-5/8 "	R4133338	R4133338	R4166689	NR	-	-	-	-
-	1-5/8 "	R4133338	R4133338	R4166689	NR	-	-	-	-
-	1-5/8 "	R4133338	R4133338	R4166689	NR	-	-	-	-
-	1-3/4 "	R4133400	R4133400	R4166917	NR	-	-	-	-
-	1-5/8 "	R4133338	R4133338	R4166689	NR	-	-	-	-
-	1-5/8 "	R4133338	R4133338	R4166689	NR	-	-	-	-
-	1-3/4 "	R4133400	R4133400	R4166917	NR	-	-	-	-
-	1-5/8 "	R4133338	R4133338	R4166689	NR	-	-	-	-
-	1-3/4 "	R4133584	R4133584	R4166897	NR	-	-	-	-
-	1-3/4 "	R4133584	R4133584	R4166897	NR	-	-	-	-
-	1-1/4 "	R4133581	R4133582	R4166923	NR	-	-	-	-
-	1-1/4 "	R4133581	R4133582	R4166923	NR	-	-	-	-
-	1-1/4 "	R4133581	R4133582	R4166923	NR	-	-	-	-
-	1-1/4 "	R4133581	R4133582	R4166923	NR	-	-	-	-
-	1-1/4 "	R4133581	R4133582	R4166923	NR	-	-	-	-
-	1-1/4 "	R4133581	R4133582	R4166923	NR	-	-	-	-
-	1-1/4 "	R4133581	R4133582	R4166923	NR	-	-	-	-
-	1-1/4 "	R4133581	R4133582	R4166923	NR	-	-	-	-
-	1-3/4 "	R4133584	R4133584	R4166897	NR	-	-	-	-
-	1-3/4 "	R4133584	R4133584	R4166897	NR	-	-	-	-
-	1-5/8 "	R4133338	R4133338	R4166689	NR	-	-	-	-
-	1-5/8 "	R4133338	R4133338	R4166689	NR	-	-	-	-
-	1-3/4 "	R4133400	R4133400	R4166917	NR	-	-	-	-
-	1-3/4 "	R4133400	R4133400	R4166917	NR	-	-	-	-
-	1-5/8 "	R4133338	R4133338	R4166689	NR	-	-	-	-
-	1-5/8 "	R4133338	R4133338	R4166689	NR	-	-	-	-
-	1-5/8 "	R4133338	R4133338	R4166689	NR	-	-	-	-
-	1-5/8 "	R4133338	R4133338	R4166689	NR	-	-	-	-
-	1-3/4 "	R4133400	R4133400	R4166917	NR	-	-	-	-
-	1-5/8 "	R4133338	R4133338	R4166689	NR	-	-	-	-
-	1-5/8 "	R4133338	R4133338	R4166689	NR	-	-	-	-
-	1-3/4 "	R4133400	R4133400	R4166917	NR	-	-	-	-
-	1-3/4 "	R4133584	R4133584	R4166897	NR	-	-	-	-
-	1-3/4 "	R4133584	R4133584	R4166897	NR	-	-	-	-
-	1-1/4 "	R4133581	R4133582	R4166923	NR	-	-	-	-
-	1-1/4 "	R4133581	R4133582	R4166923	NR	-	-	-	-
-	1-1/4 "	R4133581	R4133582	R4166923	NR	-	-	-	-
-	1-1/4 "	R4133581	R4133582	R4166923	NR	-	-	-	-
-	1-1/4 "	R4133581	R4133582	R4166923	NR	-	-	-	-

MAKE MODEL YEAR AXLE CODE AXLE WEIGHT	AXLE & BRK. TYPE	BRK. MFG.	BRAKE SIZE	FMSI	MERITOR DISC PAD OR BRAKE SHOE	MERITOR GUIDE PIN OR RETURN SPRING KIT	MERITOR CALIPER HWD. KIT OR RETURN SPRING KIT	MERITOR ADJUSTER KIT (LEFT WHEEL)	MERITOR ADJUSTER KIT (RIGHT WHEEL)
ITE(Cont.)									
190, 1900, 1910, 1950 SERIES CONVENTIONAL TILT CAB(Cont.)									
1971									
	Fm	WG	15 " x 3 "	1245A - 235	R700235	R40H521	R40H9201	R40H3524	R40H3524
FA98, 101, 109, 209	Fa	WG	15 " x 3 "	1245C - 321	R700321	R40H521	R40H9237	R40H3502	R40H3503
	Fm	WG	15 " x 3 "	1245A - 235	R700235	R40H521	R40H9201	R40H3524	R40H3524
RA192	Ra	WG	16 " x 6 "	1255 - 386	N/A	R40H597	R40H9200	NLA	NLA
	Rm	WG	16 " x 6 "	1255 - 386	N/A	R40H597	R40H9200	R404149	R404150
RA302, 328, 341, 351	TRa	WG	15 " x 6 "	4596 - 381	R700381	R40H597	R40H9200	R40H3540	R40H3541
	TRm	WG	15 " x 6 "	4596 - 381	R700381	R40H597	R40H9200	R40H3518	R404148
RA302, 328, 351	TRa	WG	15 " x 7 "	4597 - 383	R700383	R40H597	R40H9200	NLA	NLA
	TRm	WG	15 " x 7 "	4597 - 383	R700383	R40H597	R40H9200	R40H3518	R404148
RA341	TRa	WG	15 " x 5 "	1252 - 346	R700346	R40H597	R40H9200	R40H3540	R40H3541
	TRm	WG	15 " x 5 "	1252 - 346	R700346	R40H597	R40H9200	R40H3518	R404148
RA44, 186	Ra	WG	15 " x 6 "	4596 - 381	R700381	R40H597	R40H9200	R40H3540	R40H3541
	Ra	WG	15 " x 7 "	4597 - 383	R700383	R40H597	R40H9200	R40H3540	R40H3541
	Ra	WG	15 " x 7 "	4597 - 383	R700383	R40H597	R40H9200	R40H3540	R40H3541
	Rm	WG	15 " x 6 "	4596 - 381	R700381	R40H597	R40H9200	R40H3518	R404148
	Rm	WG	15 " x 7 "	4597 - 383	R700383	R40H597	R40H9200	R40H3518	R404148
	Rm	WG	15 " x 7 "	4597 - 383	R700383	R40H597	R40H9200	R40H3518	R404148
RA47, 192, 292	Ra	WG	16 " x 6 "	1255 - 386	N/A	R40H597	R40H9200	NLA	NLA
	Rm	WG	16 " x 6 "	1255 - 386	N/A	R40H597	R40H9200	R404149	R404150
1970									
FA139, 219	Fa	WG	15 " x 3-1/2 "	1280B - 322	R464004	R40H521	R40H9237	R40H3502	R40H3503
	Fm	WG	15 " x 3-1/2 "	1280 - 463	R700463	R40H521	R40H9201	R40H3524	R40H3524
FA98, 101, 109, 209	Fa	WG	15 " x 3 "	1245C - 321	R700321	R40H521	R40H9237	R40H3502	R40H3503
	Fm	WG	15 " x 3 "	1245A - 235	R700235	R40H521	R40H9201	R40H3524	R40H3524
RA302, 328, 341, 351	TRa	WG	15 " x 6 "	4596 - 381	R700381	R40H597	R40H9200	R40H3540	R40H3541
	TRm	WG	15 " x 6 "	4596 - 381	R700381	R40H597	R40H9200	R40H3518	R404148
RA302, 328, 351	TRa	WG	15 " x 7 "	4597 - 383	R700383	R40H597	R40H9200	NLA	NLA
	TRm	WG	15 " x 7 "	4597 - 383	R700383	R40H597	R40H9200	R40H3518	R404148
RA44, 186	Ra	WG	15 " x 6 "	4596 - 381	R700381	R40H597	R40H9200	R40H3540	R40H3541
	Ra	WG	15 " x 7 "	4597 - 383	R700383	R40H597	R40H9200	R40H3540	R40H3541
	Rm	WG	15 " x 6 "	4596 - 381	R700381	R40H597	R40H9200	R40H3518	R404148
	Rm	WG	15 " x 7 "	4597 - 383	R700383	R40H597	R40H9200	R40H3518	R404148
RA47, 192, 292	Ra	WG	16 " x 6 "	1255 - 386	N/A	R40H597	R40H9200	NLA	NLA
	Rm	WG	16 " x 6 "	1255 - 386	N/A	R40H597	R40H9200	R404149	R404150
1969									
FA139, 219	Fa	WG	15 " x 3-1/2 "	1280B - 322	R464004	R40H521	R40H9237	R40H3502	R40H3503
	Fm	WG	15 " x 3-1/2 "	1280 - 463	R700463	R40H521	R40H9201	R40H3524	R40H3524
RA302, 328, 341, 351	TRa	WG	15 " x 6 "	4596 - 381	R700381	R40H597	R40H9200	R40H3540	R40H3541
	TRm	WG	15 " x 6 "	4596 - 381	R700381	R40H597	R40H9200	R40H3518	R404148
RA302, 328, 351	TRa	WG	15 " x 7 "	4597 - 383	R700383	R40H597	R40H9200	NLA	NLA
	TRm	WG	15 " x 7 "	4597 - 383	R700383	R40H597	R40H9200	R40H3518	R404148
RA44, 186	Ra	WG	15 " x 6 "	4596 - 381	R700381	R40H597	R40H9200	R40H3540	R40H3541
	Ra	WG	15 " x 7 "	4597 - 383	R700383	R40H597	R40H9200	R40H3540	R40H3541
	Rm	WG	15 " x 6 "	4596 - 381	R700381	R40H597	R40H9200	R40H3518	R404148
	Rm	WG	15 " x 7 "	4597 - 383	R700383	R40H597	R40H9200	R40H3518	R404148
RA47, 192, 292	Ra	WG	16 " x 6 "	1255 - 386	N/A	R40H597	R40H9200	NLA	NLA
	Rm	WG	16 " x 6 "	1255 - 386	N/A	R40H597	R40H9200	R404149	R404150
2000 SERIES: TRACTOR									
1982									
FA139	Fa	WG	15 " x 3-1/2 "	1280B - 322	R464004	R40H521	R40H9237	R40H3502	R40H3503
	Fm	WG	15 " x 3-1/2 "	1280 - 463	R700463	R40H521	R40H9201	R40H3524	R40H3524
FA98, 101, 109	Fa	WG	15 " x 3 "	1245C - 321	R700321	R40H521	R40H9237	R40H3502	R40H3503
	Fm	WG	15 " x 3 "	1245A - 235	R700235	R40H521	R40H9201	R40H3524	R40H3524
RA302, 303, 306	TRa	WG	15 " x 7 "	4597 - 383	R700383	R40H597	R40H9200	N/A	N/A
RA302, 303, 306, 328, 351	TRa	WG	15 " x 6 "	4596 - 381	R700381	R40H597	R40H9200	R40H3540	R40H3541
	TRm	WG	15 " x 6 "	4596 - 381	R700381	R40H597	R40H9200	R40H3518	R404148
	TRm	WG	15 " x 7 "	4597 - 383	R700383	R40H597	R40H9200	R40H3518	R404148
RA44, 186	Ra	WG	15 " x 6 "	4596 - 381	R700381	R40H597	R40H9200	R40H3540	R40H3541
	Ra	WG	15 " x 7 "	4597 - 383	R700383	R40H597	R40H9200	R40H3540	R40H3541
	Rm	WG	15 " x 6 "	4596 - 381	R700381	R40H597	R40H9200	R40H3518	R404148
	Rm	WG	15 " x 7 "	4597 - 383	R700383	R40H597	R40H9200	R40H3518	R404148
RA47, 192, 292	Ra	WG	16 " x 6 "	1255 - 386	N/A	R40H597	R40H9200	N/A	N/A

MERITOR DRUM OR ROTOR NO.	CALIPER OR CYLINDER BORE SIZE	MERITOR CALIPER OR WHEEL CYLINDER (LEFT)	MERITOR CALIPER OR WHEEL CYLINDER (RIGHT)	MERITOR CALIPER OR WHEEL CYLINDER REPAIR KIT	MERITOR CALIPER PISTON	MERITOR MASTER CYLINDER	MERITOR MASTER CYLINDER KIT	MERITOR BRAKE HOSE (LEFT)	MERITOR BRAKE HOSE (RIGHT)
									ITE(Cont.)
190, 1900, 1910, 1950 SERIES CONVENTIONAL TILT CAB(Cont.)									
-	1-1/4 "	R4133581	R4133582	R4166923	NR	-	-	-	-
-	1-1/4 "	R4133581	R4133582	R4166923	NR	-	-	-	-
-	1-1/4 "	R4133581	R4133582	R4166923	NR	-	-	-	-
-	1-3/4 "	R4133584	R4133584	R4166897	NR	-	-	-	-
-	1-3/4 "	R4133584	R4133584	R4166897	NR	-	-	-	-
-	1-5/8 "	R4133338	R4133338	R4166689	NR	-	-	-	-
-	1-5/8 "	R4133338	R4133338	R4166689	NR	-	-	-	-
-	1-3/4 "	R4133400	R4133400	R4166917	NR	-	-	-	-
-	1-3/4 "	R4133400	R4133400	R4166917	NR	-	-	-	-
-	1-5/8 "	R4133338	R4133338	R4166689	NR	-	-	-	-
-	1-5/8 "	R4133338	R4133338	R4166689	NR	-	-	-	-
-	1-5/8 "	R4133338	R4133338	R4166689	NR	-	-	-	-
-	1-3/4 "	R4133400	R4133400	R4166917	NR	-	-	-	-
-	1-5/8 "	R4133338	R4133338	R4166689	NR	-	-	-	-
-	1-5/8 "	R4133338	R4133338	R4166689	NR	-	-	-	-
-	1-5/8 "	R4133338	R4133338	R4166689	NR	-	-	-	-
-	1-3/4 "	R4133400	R4133400	R4166917	NR	-	-	-	-
-	1-3/4 "	R4133584	R4133584	R4166897	NR	-	-	-	-
-	1-3/4 "	R4133584	R4133584	R4166897	NR	-	-	-	-
-	1-1/4 "	R4133581	R4133582	R4166923	NR	-	-	-	-
-	1-1/4 "	R4133581	R4133582	R4166923	NR	-	-	-	-
-	1-1/4 "	R4133581	R4133582	R4166923	NR	-	-	-	-
-	1-1/4 "	R4133581	R4133582	R4166923	NR	-	-	-	-
-	1-5/8 "	R4133338	R4133338	R4166689	NR	-	-	-	-
-	1-5/8 "	R4133338	R4133338	R4166689	NR	-	-	-	-
-	1-3/4 "	R4133400	R4133400	R4166917	NR	-	-	-	-
-	1-3/4 "	R4133400	R4133400	R4166917	NR	-	-	-	-
-	1-5/8 "	R4133338	R4133338	R4166689	NR	-	-	-	-
-	1-5/8 "	R4133338	R4133338	R4166689	NR	-	-	-	-
-	1-5/8 "	R4133338	R4133338	R4166689	NR	-	-	-	-
-	1-5/8 "	R4133338	R4133338	R4166689	NR	-	-	-	-
-	1-3/4 "	R4133584	R4133584	R4166897	NR	-	-	-	-
-	1-3/4 "	R4133584	R4133584	R4166897	NR	-	-	-	-
-	1-1/4 "	R4133581	R4133582	R4166923	NR	-	-	-	-
-	1-1/4 "	R4133581	R4133582	R4166923	NR	-	-	-	-
-	1-5/8 "	R4133338	R4133338	R4166689	NR	-	-	-	-
-	1-5/8 "	R4133338	R4133338	R4166689	NR	-	-	-	-
-	1-3/4 "	R4133400	R4133400	R4166917	NR	-	-	-	-
-	1-3/4 "	R4133400	R4133400	R4166917	NR	-	-	-	-
-	1-5/8 "	R4133338	R4133338	R4166689	NR	-	-	-	-
-	1-5/8 "	R4133338	R4133338	R4166689	NR	-	-	-	-
-	1-5/8 "	R4133338	R4133338	R4166689	NR	-	-	-	-
-	1-5/8 "	R4133338	R4133338	R4166689	NR	-	-	-	-
-	1-3/4 "	R4133584	R4133584	R4166897	NR	-	-	-	-
-	1-3/4 "	R4133584	R4133584	R4166897	NR	-	-	-	-
									2000 SERIES: TRACTOR
N/A	1-1/4 "	R4133581	R4133582	R4166923	NR	-	-	-	-
N/A	1-1/4 "	R4133581	R4133582	R4166923	NR	-	-	-	-
N/A	1-1/4 "	R4133581	R4133582	R4166923	NR	-	-	-	-
N/A	1-1/4 "	R4133581	R4133582	R4166923	NR	-	-	-	-
N/A	1-3/4 "	R4133400	R4133400	R4166917	NR	-	-	-	-
N/A	1-5/8 "	R4133338	R4133338	R4166689	NR	-	-	-	-
N/A	1-5/8 "	R4133338	R4133338	R4166689	NR	-	-	-	-
N/A	1-3/4 "	R4133400	R4133400	R4166917	NR	-	-	-	-
N/A	1-5/8 "	R4133338	R4133338	R4166689	NR	-	-	-	-
N/A	1-5/8 "	R4133338	R4133338	R4166689	NR	-	-	-	-
N/A	1-5/8 "	R4133338	R4133338	R4166689	NR	-	-	-	-
N/A	1-5/8 "	R4133338	R4133338	R4166689	NR	-	-	-	-
N/A	1-3/4 "	R4133584	R4133584	R4166897	NR	-	-	-	-

MAKE MODEL YEAR AXLE CODE AXLE WEIGHT	AXLE & BRK. TYPE	BRK. MFG.	BRAKE SIZE	FMSI	MERITOR DISC PAD OR BRAKE SHOE	MERITOR GUIDE PIN OR RETURN SPRING KIT	MERITOR CALIPER HWD. KIT OR RETURN SPRING KIT	MERITOR ADJUSTER KIT (LEFT WHEEL)	MERITOR ADJUSTER KIT (RIGHT WHEEL)
ITE(Cont.)									
2000 SERIES: TRACTOR(Cont.)									
1982									
	Rm	WG	16 " x 6 "	1255 - 386	N/A	R40H597	R40H9200	R404149	R404150
1981									
FA139	Fa	WG	15 " x 3-1/2 "	1280B - 322	R464004	R40H521	R40H9237	R40H3502	R40H3503
	Fm	WG	15 " x 3-1/2 "	1280 - 463	R700463	R40H521	R40H9201	R40H3524	R40H3524
FA98, 101, 109	Fa	WG	15 " x 3 "	1245C - 321	R700321	R40H521	R40H9237	R40H3502	R40H3503
	Fm	WG	15 " x 3 "	1245A - 235	R700235	R40H521	R40H9201	R40H3524	R40H3524
RA302, 303, 306	TRa	WG	15 " x 7 "	4597 - 383	R700383	R40H597	R40H9200	N/A	N/A
RA302, 303, 306, 328, 351	TRa	WG	15 " x 6 "	4596 - 381	R700381	R40H597	R40H9200	R40H3540	R40H3541
	TRm	WG	15 " x 6 "	4596 - 381	R700381	R40H597	R40H9200	R40H3518	R404148
	TRm	WG	15 " x 7 "	4597 - 383	R700383	R40H597	R40H9200	R40H3518	R404148
RA44, 186	Ra	WG	15 " x 6 "	4596 - 381	R700381	R40H597	R40H9200	R40H3540	R40H3541
	Ra	WG	15 " x 7 "	4597 - 383	R700383	R40H597	R40H9200	R40H3540	R40H3541
	Rm	WG	15 " x 6 "	4596 - 381	R700381	R40H597	R40H9200	R40H3518	R404148
	Rm	WG	15 " x 7 "	4597 - 383	R700383	R40H597	R40H9200	R40H3518	R404148
RA47, 192, 292	Ra	WG	16 " x 6 "	1255 - 386	N/A	R40H597	R40H9200	N/A	N/A
	Rm	WG	16 " x 6 "	1255 - 386	N/A	R40H597	R40H9200	R404149	R404150
1980									
FA139	Fa	WG	15 " x 3-1/2 "	1280B - 322	R464004	R40H521	R40H9237	R40H3502	R40H3503
	Fm	WG	15 " x 3-1/2 "	1280 - 463	R700463	R40H521	R40H9201	R40H3524	R40H3524
FA98, 101, 109	Fa	WG	15 " x 3 "	1245C - 321	R700321	R40H521	R40H9237	R40H3502	R40H3503
	Fm	WG	15 " x 3 "	1245A - 235	R700235	R40H521	R40H9201	R40H3524	R40H3524
RA302, 303, 306	TRa	WG	15 " x 7 "	4597 - 383	R700383	R40H597	R40H9200	N/A	N/A
RA302, 303, 306, 328, 351	TRa	WG	15 " x 6 "	4596 - 381	R700381	R40H597	R40H9200	R40H3540	R40H3541
	TRm	WG	15 " x 6 "	4596 - 381	R700381	R40H597	R40H9200	R40H3518	R404148
	TRm	WG	15 " x 7 "	4597 - 383	R700383	R40H597	R40H9200	R40H3518	R404148
RA44, 186	Ra	WG	15 " x 6 "	4596 - 381	R700381	R40H597	R40H9200	R40H3540	R40H3541
	Ra	WG	15 " x 7 "	4597 - 383	R700383	R40H597	R40H9200	R40H3540	R40H3541
	Rm	WG	15 " x 6 "	4596 - 381	R700381	R40H597	R40H9200	R40H3518	R404148
	Rm	WG	15 " x 7 "	4597 - 383	R700383	R40H597	R40H9200	R40H3518	R404148
RA47, 192, 292	Ra	WG	16 " x 6 "	1255 - 386	N/A	R40H597	R40H9200	N/A	N/A
	Rm	WG	16 " x 6 "	1255 - 386	N/A	R40H597	R40H9200	R404149	R404150
1979									
FA139	Fa	WG	15 " x 3-1/2 "	1280B - 322	R464004	R40H521	R40H9237	R40H3502	R40H3503
	Fm	WG	15 " x 3-1/2 "	1280 - 463	R700463	R40H521	R40H9201	R40H3524	R40H3524
FA98, 101, 109	Fa	WG	15 " x 3 "	1245C - 321	R700321	R40H521	R40H9237	R40H3502	R40H3503
	Fm	WG	15 " x 3 "	1245A - 235	R700235	R40H521	R40H9201	R40H3524	R40H3524
RA302, 303, 306	TRa	WG	15 " x 7 "	4597 - 383	R700383	R40H597	R40H9200	N/A	N/A
RA302, 303, 306, 328, 351	TRa	WG	15 " x 6 "	4596 - 381	R700381	R40H597	R40H9200	R40H3540	R40H3541
	TRm	WG	15 " x 6 "	4596 - 381	R700381	R40H597	R40H9200	R40H3518	R404148
	TRm	WG	15 " x 7 "	4597 - 383	R700383	R40H597	R40H9200	R40H3518	R404148
RA44, 186	Ra	WG	15 " x 6 "	4596 - 381	R700381	R40H597	R40H9200	R40H3540	R40H3541
	Ra	WG	15 " x 7 "	4597 - 383	R700383	R40H597	R40H9200	R40H3540	R40H3541
	Rm	WG	15 " x 6 "	4596 - 381	R700381	R40H597	R40H9200	R40H3518	R404148
	Rm	WG	15 " x 7 "	4597 - 383	R700383	R40H597	R40H9200	R40H3518	R404148
RA47, 192, 292	Ra	WG	16 " x 6 "	1255 - 386	N/A	R40H597	R40H9200	N/A	N/A
	Rm	WG	16 " x 6 "	1255 - 386	N/A	R40H597	R40H9200	R404149	R404150
1978									
FA139	Fa	WG	15 " x 3-1/2 "	1280B - 322	R464004	R40H521	R40H9237	R40H3502	R40H3503
	Fm	WG	15 " x 3-1/2 "	1280 - 463	R700463	R40H521	R40H9201	R40H3524	R40H3524
FA98, 101, 109	Fa	WG	15 " x 3 "	1245C - 321	R700321	R40H521	R40H9237	R40H3502	R40H3503
	Fm	WG	15 " x 3 "	1245A - 235	R700235	R40H521	R40H9201	R40H3524	R40H3524
RA302, 303, 306	TRa	WG	15 " x 7 "	4597 - 383	R700383	R40H597	R40H9200	N/A	N/A
RA302, 303, 306, 328, 351	TRa	WG	15 " x 6 "	4596 - 381	R700381	R40H597	R40H9200	R40H3540	R40H3541
	TRm	WG	15 " x 6 "	4596 - 381	R700381	R40H597	R40H9200	R40H3518	R404148
	TRm	WG	15 " x 7 "	4597 - 383	R700383	R40H597	R40H9200	R40H3518	R404148
RA44, 186	Ra	WG	15 " x 6 "	4596 - 381	R700381	R40H597	R40H9200	R40H3540	R40H3541
	Ra	WG	15 " x 7 "	4597 - 383	R700383	R40H597	R40H9200	R40H3540	R40H3541
	Rm	WG	15 " x 6 "	4596 - 381	R700381	R40H597	R40H9200	R40H3518	R404148
	Rm	WG	15 " x 7 "	4597 - 383	R700383	R40H597	R40H9200	R40H3518	R404148
RA47, 192, 292	Ra	WG	16 " x 6 "	1255 - 386	N/A	R40H597	R40H9200	N/A	N/A
	Rm	WG	16 " x 6 "	1255 - 386	N/A	R40H597	R40H9200	R404149	R404150
1977									
FA139	Fa	WG	15 " x 3-1/2 "	1280B - 322	R464004	R40H521	R40H9237	R40H3502	R40H3503

MERITOR DRUM OR ROTOR NO.	CALIPER OR CYLINDER BORE SIZE	MERITOR CALIPER OR WHEEL CYLINDER (LEFT)	MERITOR CALIPER OR WHEEL CYLINDER (RIGHT)	MERITOR CALIPER OR WHEEL CYLINDER REPAIR KIT	MERITOR CALIPER PISTON	MERITOR MASTER CYLINDER	MERITOR MASTER CYLINDER KIT	MERITOR BRAKE HOSE (LEFT)	MERITOR BRAKE HOSE (RIGHT)
									ITE(Cont.)
									2000 SERIES: TRACTOR(Cont.)
N/A	1-3/4 "	R4133584	R4133584	R4166897	NR	-	-	-	-
N/A	1-1/4 "	R4133581	R4133582	R4166923	NR	-	-	-	-
N/A	1-1/4 "	R4133581	R4133582	R4166923	NR	-	-	-	-
N/A	1-1/4 "	R4133581	R4133582	R4166923	NR	-	-	-	-
N/A	1-1/4 "	R4133581	R4133582	R4166923	NR	-	-	-	-
N/A	1-3/4 "	R4133400	R4133400	R4166917	NR	-	-	-	-
N/A	1-5/8 "	R4133338	R4133338	R4166689	NR	-	-	-	-
N/A	1-5/8 "	R4133338	R4133338	R4166689	NR	-	-	-	-
N/A	1-3/4 "	R4133400	R4133400	R4166917	NR	-	-	-	-
N/A	1-5/8 "	R4133338	R4133338	R4166689	NR	-	-	-	-
N/A	1-5/8 "	R4133338	R4133338	R4166689	NR	-	-	-	-
N/A	1-5/8 "	R4133338	R4133338	R4166689	NR	-	-	-	-
N/A	1-5/8 "	R4133338	R4133338	R4166689	NR	-	-	-	-
N/A	1-3/4 "	R4133584	R4133584	R4166897	NR	-	-	-	-
N/A	1-3/4 "	R4133584	R4133584	R4166897	NR	-	-	-	-
N/A	1-1/4 "	R4133581	R4133582	R4166923	NR	-	-	-	-
N/A	1-1/4 "	R4133581	R4133582	R4166923	NR	-	-	-	-
N/A	1-1/4 "	R4133581	R4133582	R4166923	NR	-	-	-	-
N/A	1-1/4 "	R4133581	R4133582	R4166923	NR	-	-	-	-
N/A	1-3/4 "	R4133400	R4133400	R4166917	NR	-	-	-	-
N/A	1-5/8 "	R4133338	R4133338	R4166689	NR	-	-	-	-
N/A	1-5/8 "	R4133338	R4133338	R4166689	NR	-	-	-	-
N/A	1-3/4 "	R4133400	R4133400	R4166917	NR	-	-	-	-
N/A	1-5/8 "	R4133338	R4133338	R4166689	NR	-	-	-	-
N/A	1-5/8 "	R4133338	R4133338	R4166689	NR	-	-	-	-
N/A	1-5/8 "	R4133338	R4133338	R4166689	NR	-	-	-	-
N/A	1-5/8 "	R4133338	R4133338	R4166689	NR	-	-	-	-
N/A	1-3/4 "	R4133584	R4133584	R4166897	NR	-	-	-	-
N/A	1-3/4 "	R4133584	R4133584	R4166897	NR	-	-	-	-
N/A	1-1/4 "	R4133581	R4133582	R4166923	NR	-	-	-	-
N/A	1-1/4 "	R4133581	R4133582	R4166923	NR	-	-	-	-
N/A	1-1/4 "	R4133581	R4133582	R4166923	NR	-	-	-	-
N/A	1-1/4 "	R4133581	R4133582	R4166923	NR	-	-	-	-
N/A	1-3/4 "	R4133400	R4133400	R4166917	NR	-	-	-	-
N/A	1-5/8 "	R4133338	R4133338	R4166689	NR	-	-	-	-
N/A	1-5/8 "	R4133338	R4133338	R4166689	NR	-	-	-	-
N/A	1-3/4 "	R4133400	R4133400	R4166917	NR	-	-	-	-
N/A	1-5/8 "	R4133338	R4133338	R4166689	NR	-	-	-	-
N/A	1-5/8 "	R4133338	R4133338	R4166689	NR	-	-	-	-
N/A	1-5/8 "	R4133338	R4133338	R4166689	NR	-	-	-	-
N/A	1-5/8 "	R4133338	R4133338	R4166689	NR	-	-	-	-
N/A	1-3/4 "	R4133584	R4133584	R4166897	NR	-	-	-	-
N/A	1-3/4 "	R4133584	R4133584	R4166897	NR	-	-	-	-
N/A	1-1/4 "	R4133581	R4133582	R4166923	NR	-	-	-	-
N/A	1-1/4 "	R4133581	R4133582	R4166923	NR	-	-	-	-
N/A	1-1/4 "	R4133581	R4133582	R4166923	NR	-	-	-	-
N/A	1-1/4 "	R4133581	R4133582	R4166923	NR	-	-	-	-
N/A	1-3/4 "	R4133400	R4133400	R4166917	NR	-	-	-	-
N/A	1-5/8 "	R4133338	R4133338	R4166689	NR	-	-	-	-
N/A	1-5/8 "	R4133338	R4133338	R4166689	NR	-	-	-	-
N/A	1-3/4 "	R4133400	R4133400	R4166917	NR	-	-	-	-
N/A	1-5/8 "	R4133338	R4133338	R4166689	NR	-	-	-	-
N/A	1-5/8 "	R4133338	R4133338	R4166689	NR	-	-	-	-
N/A	1-5/8 "	R4133338	R4133338	R4166689	NR	-	-	-	-
N/A	1-5/8 "	R4133338	R4133338	R4166689	NR	-	-	-	-
N/A	1-3/4 "	R4133584	R4133584	R4166897	NR	-	-	-	-
N/A	1-3/4 "	R4133584	R4133584	R4166897	NR	-	-	-	-
-	1-1/4 "	R4133581	R4133582	R4166923	NR	-	-	-	-

MAKE MODEL YEAR AXLE CODE AXLE WEIGHT	AXLE & BRK. TYPE	BRK. MFG.	BRAKE SIZE	FMSI	MERITOR DISC PAD OR BRAKE SHOE	MERITOR GUIDE PIN OR RETURN SPRING KIT	MERITOR CALIPER HWD. KIT OR RETURN SPRING KIT	MERITOR ADJUSTER KIT (LEFT WHEEL)	MERITOR ADJUSTER KIT (RIGHT WHEEL)
ITE(Cont.)									
2000 SERIES: TRACTOR(Cont.)									
1977									
	Fm	WG	15 " x 3-1/2 "	1280 - 463	R700463	R40H521	R40H9201	R40H3524	R40H3524
FA98, 101, 109	Fa	WG	15 " x 3 "	1245C - 321	R700321	R40H521	R40H9237	R40H3502	R40H3503
	Fm	WG	15 " x 3 "	1245A - 235	R700235	R40H521	R40H9201	R40H3524	R40H3524
RA302, 303, 306	TRa	WG	15 " x 7 "	4597 - 383	R700383	R40H597	R40H9200	NLA	NLA
RA302, 303, 306, 328, 351	TRa	WG	15 " x 6 "	4596 - 381	R700381	R40H597	R40H9200	R40H3540	R40H3541
	TRm	WG	15 " x 6 "	4596 - 381	R700381	R40H597	R40H9200	R40H3518	R404148
	TRm	WG	15 " x 7 "	4597 - 383	R700383	R40H597	R40H9200	R40H3518	R404148
RA44, 186	Ra	WG	15 " x 6 "	4596 - 381	R700381	R40H597	R40H9200	R40H3540	R40H3541
	Ra	WG	15 " x 7 "	4597 - 383	R700383	R40H597	R40H9200	R40H3540	R40H3541
	Rm	WG	15 " x 6 "	4596 - 381	R700381	R40H597	R40H9200	R40H3518	R404148
	Rm	WG	15 " x 7 "	4597 - 383	R700383	R40H597	R40H9200	R40H3518	R404148
RA47, 192, 292	Ra	WG	16 " x 6 "	1255 - 386	N/A	R40H597	R40H9200	NLA	NLA
	Rm	WG	16 " x 6 "	1255 - 386	N/A	R40H597	R40H9200	R404149	R404150
1976									
FA139	Fa	WG	15 " x 3-1/2 "	1280B - 322	R464004	R40H521	R40H9237	R40H3502	R40H3503
	Fm	WG	15 " x 3-1/2 "	1280 - 463	R700463	R40H521	R40H9201	R40H3524	R40H3524
FA98, 101, 109	Fa	WG	15 " x 3 "	1245C - 321	R700321	R40H521	R40H9237	R40H3502	R40H3503
	Fm	WG	15 " x 3 "	1245A - 235	R700235	R40H521	R40H9201	R40H3524	R40H3524
RA302, 303, 306	TRa	WG	15 " x 7 "	4597 - 383	R700383	R40H597	R40H9200	NLA	NLA
RA302, 303, 306, 328, 351	TRa	WG	15 " x 6 "	4596 - 381	R700381	R40H597	R40H9200	R40H3540	R40H3541
	TRm	WG	15 " x 6 "	4596 - 381	R700381	R40H597	R40H9200	R40H3518	R404148
	TRm	WG	15 " x 7 "	4597 - 383	R700383	R40H597	R40H9200	R40H3518	R404148
RA44, 186	Ra	WG	15 " x 6 "	4596 - 381	R700381	R40H597	R40H9200	R40H3540	R40H3541
	Ra	WG	15 " x 7 "	4597 - 383	R700383	R40H597	R40H9200	R40H3540	R40H3541
	Rm	WG	15 " x 6 "	4596 - 381	R700381	R40H597	R40H9200	R40H3518	R404148
	Rm	WG	15 " x 7 "	4597 - 383	R700383	R40H597	R40H9200	R40H3518	R404148
RA47, 192, 292	Ra	WG	16 " x 6 "	1255 - 386	N/A	R40H597	R40H9200	NLA	NLA
	Rm	WG	16 " x 6 "	1255 - 386	N/A	R40H597	R40H9200	R404149	R404150
1975									
FA139	Fa	WG	15 " x 3-1/2 "	1280B - 322	R464004	R40H521	R40H9237	R40H3502	R40H3503
	Fm	WG	15 " x 3-1/2 "	1280 - 463	R700463	R40H521	R40H9201	R40H3524	R40H3524
FA98, 101, 109	Fa	WG	15 " x 3 "	1245C - 321	R700321	R40H521	R40H9237	R40H3502	R40H3503
	Fm	WG	15 " x 3 "	1245A - 235	R700235	R40H521	R40H9201	R40H3524	R40H3524
RA302, 303, 306	TRa	WG	15 " x 7 "	4597 - 383	R700383	R40H597	R40H9200	NLA	NLA
RA302, 303, 306, 328, 351	TRa	WG	15 " x 6 "	4596 - 381	R700381	R40H597	R40H9200	R40H3540	R40H3541
	TRm	WG	15 " x 6 "	4596 - 381	R700381	R40H597	R40H9200	R40H3518	R404148
	TRm	WG	15 " x 7 "	4597 - 383	R700383	R40H597	R40H9200	R40H3518	R404148
RA44, 186	Ra	WG	15 " x 6 "	4596 - 381	R700381	R40H597	R40H9200	R40H3540	R40H3541
	Ra	WG	15 " x 7 "	4597 - 383	R700383	R40H597	R40H9200	R40H3540	R40H3541
	Rm	WG	15 " x 6 "	4596 - 381	R700381	R40H597	R40H9200	R40H3518	R404148
	Rm	WG	15 " x 7 "	4597 - 383	R700383	R40H597	R40H9200	R40H3518	R404148
RA47, 192, 292	Ra	WG	16 " x 6 "	1255 - 386	N/A	R40H597	R40H9200	NLA	NLA
	Rm	WG	16 " x 6 "	1255 - 386	N/A	R40H597	R40H9200	R404149	R404150
1974									
FA139	Fa	WG	15 " x 3-1/2 "	1280B - 322	R464004	R40H521	R40H9237	R40H3502	R40H3503
	Fm	WG	15 " x 3-1/2 "	1280 - 463	R700463	R40H521	R40H9201	R40H3524	R40H3524
FA98, 101, 109	Fa	WG	15 " x 3 "	1245C - 321	R700321	R40H521	R40H9237	R40H3502	R40H3503
	Fm	WG	15 " x 3 "	1245A - 235	R700235	R40H521	R40H9201	R40H3524	R40H3524
RA302, 303, 306	TRa	WG	15 " x 7 "	4597 - 383	R700383	R40H597	R40H9200	NLA	NLA
RA302, 303, 306, 328, 351	TRa	WG	15 " x 6 "	4596 - 381	R700381	R40H597	R40H9200	R40H3540	R40H3541
	TRm	WG	15 " x 6 "	4596 - 381	R700381	R40H597	R40H9200	R40H3518	R404148
	TRm	WG	15 " x 7 "	4597 - 383	R700383	R40H597	R40H9200	R40H3518	R404148
RA44, 186	Ra	WG	15 " x 6 "	4596 - 381	R700381	R40H597	R40H9200	R40H3540	R40H3541
	Ra	WG	15 " x 7 "	4597 - 383	R700383	R40H597	R40H9200	R40H3540	R40H3541
	Rm	WG	15 " x 6 "	4596 - 381	R700381	R40H597	R40H9200	R40H3518	R404148
	Rm	WG	15 " x 7 "	4597 - 383	R700383	R40H597	R40H9200	R40H3518	R404148
RA47, 192, 292	Ra	WG	16 " x 6 "	1255 - 386	N/A	R40H597	R40H9200	NLA	NLA
	Rm	WG	16 " x 6 "	1255 - 386	N/A	R40H597	R40H9200	R404149	R404150
1973									
FA139	Fa	WG	15 " x 3-1/2 "	1280B - 322	R464004	R40H521	R40H9237	R40H3502	R40H3503
	Fm	WG	15 " x 3-1/2 "	1280 - 463	R700463	R40H521	R40H9201	R40H3524	R40H3524
FA98, 101, 109	Fa	WG	15 " x 3 "	1245C - 321	R700321	R40H521	R40H9237	R40H3502	R40H3503

MERITOR DRUM OR ROTOR NO.	CALIPER OR CYLINDER BORE SIZE	MERITOR CALIPER OR WHEEL CYLINDER (LEFT)	MERITOR CALIPER OR WHEEL CYLINDER (RIGHT)	MERITOR CALIPER OR WHEEL CYLINDER REPAIR KIT	MERITOR CALIPER PISTON	MERITOR MASTER CYLINDER	MERITOR MASTER CYLINDER KIT	MERITOR BRAKE HOSE (LEFT)	MERITOR BRAKE HOSE (RIGHT)
									ITE(Cont.)
									2000 SERIES: TRACTOR(Cont.)
-	1-1/4 "	R4133581	R4133582	R4166923	NR	-	-	-	-
-	1-1/4 "	R4133581	R4133582	R4166923	NR	-	-	-	-
-	1-1/4 "	R4133581	R4133582	R4166923	NR	-	-	-	-
-	1-3/4 "	R4133400	R4133400	R4166917	NR	-	-	-	-
-	1-5/8 "	R4133338	R4133338	R4166689	NR	-	-	-	-
-	1-5/8 "	R4133338	R4133338	R4166689	NR	-	-	-	-
-	1-3/4 "	R4133400	R4133400	R4166917	NR	-	-	-	-
-	1-5/8 "	R4133338	R4133338	R4166689	NR	-	-	-	-
-	1-5/8 "	R4133338	R4133338	R4166689	NR	-	-	-	-
-	1-5/8 "	R4133338	R4133338	R4166689	NR	-	-	-	-
-	1-5/8 "	R4133338	R4133338	R4166689	NR	-	-	-	-
-	1-3/4 "	R4133584	R4133584	R4166897	NR	-	-	-	-
-	1-3/4 "	R4133584	R4133584	R4166897	NR	-	-	-	-
-	1-1/4 "	R4133581	R4133582	R4166923	NR	-	-	-	-
-	1-1/4 "	R4133581	R4133582	R4166923	NR	-	-	-	-
-	1-1/4 "	R4133581	R4133582	R4166923	NR	-	-	-	-
-	1-1/4 "	R4133581	R4133582	R4166923	NR	-	-	-	-
-	1-3/4 "	R4133400	R4133400	R4166917	NR	-	-	-	-
-	1-5/8 "	R4133338	R4133338	R4166689	NR	-	-	-	-
-	1-5/8 "	R4133338	R4133338	R4166689	NR	-	-	-	-
-	1-3/4 "	R4133400	R4133400	R4166917	NR	-	-	-	-
-	1-5/8 "	R4133338	R4133338	R4166689	NR	-	-	-	-
-	1-5/8 "	R4133338	R4133338	R4166689	NR	-	-	-	-
-	1-5/8 "	R4133338	R4133338	R4166689	NR	-	-	-	-
-	1-5/8 "	R4133338	R4133338	R4166689	NR	-	-	-	-
-	1-3/4 "	R4133584	R4133584	R4166897	NR	-	-	-	-
-	1-3/4 "	R4133584	R4133584	R4166897	NR	-	-	-	-
-	1-1/4 "	R4133581	R4133582	R4166923	NR	-	-	-	-
-	1-1/4 "	R4133581	R4133582	R4166923	NR	-	-	-	-
-	1-1/4 "	R4133581	R4133582	R4166923	NR	-	-	-	-
-	1-1/4 "	R4133581	R4133582	R4166923	NR	-	-	-	-
-	1-3/4 "	R4133400	R4133400	R4166917	NR	-	-	-	-
-	1-5/8 "	R4133338	R4133338	R4166689	NR	-	-	-	-
-	1-5/8 "	R4133338	R4133338	R4166689	NR	-	-	-	-
-	1-3/4 "	R4133400	R4133400	R4166917	NR	-	-	-	-
-	1-5/8 "	R4133338	R4133338	R4166689	NR	-	-	-	-
-	1-5/8 "	R4133338	R4133338	R4166689	NR	-	-	-	-
-	1-5/8 "	R4133338	R4133338	R4166689	NR	-	-	-	-
-	1-5/8 "	R4133338	R4133338	R4166689	NR	-	-	-	-
-	1-3/4 "	R4133584	R4133584	R4166897	NR	-	-	-	-
-	1-3/4 "	R4133584	R4133584	R4166897	NR	-	-	-	-
-	1-1/4 "	R4133581	R4133582	R4166923	NR	-	-	-	-
-	1-1/4 "	R4133581	R4133582	R4166923	NR	-	-	-	-
-	1-1/4 "	R4133581	R4133582	R4166923	NR	-	-	-	-
-	1-1/4 "	R4133581	R4133582	R4166923	NR	-	-	-	-
-	1-3/4 "	R4133400	R4133400	R4166917	NR	-	-	-	-
-	1-5/8 "	R4133338	R4133338	R4166689	NR	-	-	-	-
-	1-5/8 "	R4133338	R4133338	R4166689	NR	-	-	-	-
-	1-3/4 "	R4133400	R4133400	R4166917	NR	-	-	-	-
-	1-5/8 "	R4133338	R4133338	R4166689	NR	-	-	-	-
-	1-5/8 "	R4133338	R4133338	R4166689	NR	-	-	-	-
-	1-5/8 "	R4133338	R4133338	R4166689	NR	-	-	-	-
-	1-5/8 "	R4133338	R4133338	R4166689	NR	-	-	-	-
-	1-3/4 "	R4133584	R4133584	R4166897	NR	-	-	-	-
-	1-3/4 "	R4133584	R4133584	R4166897	NR	-	-	-	-
-	1-1/4 "	R4133581	R4133582	R4166923	NR	-	-	-	-
-	1-1/4 "	R4133581	R4133582	R4166923	NR	-	-	-	-
-	1-1/4 "	R4133581	R4133582	R4166923	NR	-	-	-	-

MAKE MODEL YEAR AXLE CODE AXLE WEIGHT	AXLE & BRK. TYPE	BRK. MFG.	BRAKE SIZE	FMSI	MERITOR DISC PAD OR BRAKE SHOE	MERITOR GUIDE PIN OR RETURN SPRING KIT	MERITOR CALIPER HWD. KIT OR RETURN SPRING KIT	MERITOR ADJUSTER KIT (LEFT WHEEL)	MERITOR ADJUSTER KIT (RIGHT WHEEL)
ITE(Cont.)									
2000 SERIES: TRACTOR(Cont.)									
1973									
FA98, 101, 109	Fm	WG	15 " x 3 "	1245A - 235	R700235	R40H521	R40H9201	R40H3524	R40H3524
RA302, 303, 306	TRa	WG	15 " x 7 "	4597 - 383	R700383	R40H597	R40H9200	NLA	NLA
RA302, 303, 306, 328, 351	TRa	WG	15 " x 6 "	4596 - 381	R700381	R40H597	R40H9200	R40H3540	R40H3541
	TRm	WG	15 " x 6 "	4596 - 381	R700381	R40H597	R40H9200	R40H3518	R404148
	TRm	WG	15 " x 7 "	4597 - 383	R700383	R40H597	R40H9200	R40H3518	R404148
RA44, 186	Ra	WG	15 " x 6 "	4596 - 381	R700381	R40H597	R40H9200	R40H3540	R40H3541
	Ra	WG	15 " x 7 "	4597 - 383	R700383	R40H597	R40H9200	R40H3540	R40H3541
	Rm	WG	15 " x 6 "	4596 - 381	R700381	R40H597	R40H9200	R40H3518	R404148
	Rm	WG	15 " x 7 "	4597 - 383	R700383	R40H597	R40H9200	R40H3518	R404148
RA47, 192, 292	Ra	WG	16 " x 6 "	1255 - 386	N/A	R40H597	R40H9200	NLA	NLA
	Rm	WG	16 " x 6 "	1255 - 386	N/A	R40H597	R40H9200	R404149	R404150
1972									
FA139	Fa	WG	15 " x 3-1/2 "	1280B - 322	R464004	R40H521	R40H9237	R40H3502	R40H3503
	Fm	WG	15 " x 3-1/2 "	1280 - 463	R700463	R40H521	R40H9201	R40H3524	R40H3524
FA98, 101, 109	Fa	WG	15 " x 3 "	1245C - 321	R700321	R40H521	R40H9237	R40H3502	R40H3503
	Fm	WG	15 " x 3 "	1245A - 235	R700235	R40H521	R40H9201	R40H3524	R40H3524
RA302, 303, 306	TRa	WG	15 " x 7 "	4597 - 383	R700383	R40H597	R40H9200	NLA	NLA
RA302, 303, 306, 328, 351	TRa	WG	15 " x 6 "	4596 - 381	R700381	R40H597	R40H9200	R40H3540	R40H3541
	TRm	WG	15 " x 6 "	4596 - 381	R700381	R40H597	R40H9200	R40H3518	R404148
	TRm	WG	15 " x 7 "	4597 - 383	R700383	R40H597	R40H9200	R40H3518	R404148
RA44, 186	Ra	WG	15 " x 6 "	4596 - 381	R700381	R40H597	R40H9200	R40H3540	R40H3541
	Ra	WG	15 " x 7 "	4597 - 383	R700383	R40H597	R40H9200	R40H3540	R40H3541
	Rm	WG	15 " x 6 "	4596 - 381	R700381	R40H597	R40H9200	R40H3518	R404148
	Rm	WG	15 " x 7 "	4597 - 383	R700383	R40H597	R40H9200	R40H3518	R404148
RA47, 192, 292	Ra	WG	16 " x 6 "	1255 - 386	N/A	R40H597	R40H9200	NLA	NLA
	Rm	WG	16 " x 6 "	1255 - 386	N/A	R40H597	R40H9200	R404149	R404150
1971									
FA139	Fa	WG	15 " x 3-1/2 "	1280B - 322	R464004	R40H521	R40H9237	R40H3502	R40H3503
	Fm	WG	15 " x 3-1/2 "	1280 - 463	R700463	R40H521	R40H9201	R40H3524	R40H3524
FA98, 101, 109	Fa	WG	15 " x 3 "	1245C - 321	R700321	R40H521	R40H9237	R40H3502	R40H3503
	Fm	WG	15 " x 3 "	1245A - 235	R700235	R40H521	R40H9201	R40H3524	R40H3524
RA302, 303, 306	TRa	WG	15 " x 7 "	4597 - 383	R700383	R40H597	R40H9200	NLA	NLA
RA302, 303, 306, 328, 351	TRa	WG	15 " x 6 "	4596 - 381	R700381	R40H597	R40H9200	R40H3540	R40H3541
	TRm	WG	15 " x 6 "	4596 - 381	R700381	R40H597	R40H9200	R40H3518	R404148
	TRm	WG	15 " x 7 "	4597 - 383	R700383	R40H597	R40H9200	R40H3518	R404148
RA44, 186	Ra	WG	15 " x 6 "	4596 - 381	R700381	R40H597	R40H9200	R40H3540	R40H3541
	Ra	WG	15 " x 7 "	4597 - 383	R700383	R40H597	R40H9200	R40H3540	R40H3541
	Rm	WG	15 " x 6 "	4596 - 381	R700381	R40H597	R40H9200	R40H3518	R404148
	Rm	WG	15 " x 7 "	4597 - 383	R700383	R40H597	R40H9200	R40H3518	R404148
RA47, 192, 292	Ra	WG	16 " x 6 "	1255 - 386	N/A	R40H597	R40H9200	NLA	NLA
	Rm	WG	16 " x 6 "	1255 - 386	N/A	R40H597	R40H9200	R404149	R404150
1970									
FA139	Fa	WG	15 " x 3-1/2 "	1280B - 322	R464004	R40H521	R40H9237	R40H3502	R40H3503
	Fm	WG	15 " x 3-1/2 "	1280 - 463	R700463	R40H521	R40H9201	R40H3524	R40H3524
FA98, 101, 109	Fa	WG	15 " x 3 "	1245C - 321	R700321	R40H521	R40H9237	R40H3502	R40H3503
	Fm	WG	15 " x 3 "	1245A - 235	R700235	R40H521	R40H9201	R40H3524	R40H3524
RA302, 303, 306	TRa	WG	15 " x 7 "	4597 - 383	R700383	R40H597	R40H9200	NLA	NLA
RA302, 303, 306, 328, 351	TRa	WG	15 " x 6 "	4596 - 381	R700381	R40H597	R40H9200	R40H3540	R40H3541
	TRm	WG	15 " x 6 "	4596 - 381	R700381	R40H597	R40H9200	R40H3518	R404148
	TRm	WG	15 " x 7 "	4597 - 383	R700383	R40H597	R40H9200	R40H3518	R404148
RA44, 186	Ra	WG	15 " x 6 "	4596 - 381	R700381	R40H597	R40H9200	R40H3540	R40H3541
	Ra	WG	15 " x 7 "	4597 - 383	R700383	R40H597	R40H9200	R40H3540	R40H3541
	Rm	WG	15 " x 6 "	4596 - 381	R700381	R40H597	R40H9200	R40H3518	R404148
	Rm	WG	15 " x 7 "	4597 - 383	R700383	R40H597	R40H9200	R40H3518	R404148
RA47, 192, 292	Ra	WG	16 " x 6 "	1255 - 386	N/A	R40H597	R40H9200	NLA	NLA
	Rm	WG	16 " x 6 "	1255 - 386	N/A	R40H597	R40H9200	R404149	R404150
1969									
FA139	Fa	WG	15 " x 3-1/2 "	1280B - 322	R464004	R40H521	R40H9237	R40H3502	R40H3503
	Fm	WG	15 " x 3-1/2 "	1280 - 463	R700463	R40H521	R40H9201	R40H3524	R40H3524
FA98, 101, 109	Fa	WG	15 " x 3 "	1245C - 321	R700321	R40H521	R40H9237	R40H3502	R40H3503
	Fm	WG	15 " x 3 "	1245A - 235	R700235	R40H521	R40H9201	R40H3524	R40H3524
RA302, 303, 306	TRa	WG	15 " x 7 "	4597 - 383	R700383	R40H597	R40H9200	NLA	NLA

MERITOR DRUM OR ROTOR NO.	CALIPER OR CYLINDER BORE SIZE	MERITOR CALIPER OR WHEEL CYLINDER (LEFT)	MERITOR CALIPER OR WHEEL CYLINDER (RIGHT)	MERITOR CALIPER OR WHEEL CYLINDER REPAIR KIT	MERITOR CALIPER PISTON	MERITOR MASTER CYLINDER	MERITOR MASTER CYLINDER KIT	MERITOR BRAKE HOSE (LEFT)	MERITOR BRAKE HOSE (RIGHT)
									ITE(Cont.)
									2000 SERIES: TRACTOR(Cont.)
-	1-1/4 "	R4133581	R4133582	R4166923	NR	-	-	-	-
-	1-3/4 "	R4133400	R4133400	R4166917	NR	-	-	-	-
-	1-5/8 "	R4133338	R4133338	R4166689	NR	-	-	-	-
-	1-5/8 "	R4133338	R4133338	R4166689	NR	-	-	-	-
-	1-3/4 "	R4133400	R4133400	R4166917	NR	-	-	-	-
-	1-5/8 "	R4133338	R4133338	R4166689	NR	-	-	-	-
-	1-5/8 "	R4133338	R4133338	R4166689	NR	-	-	-	-
-	1-5/8 "	R4133338	R4133338	R4166689	NR	-	-	-	-
-	1-5/8 "	R4133338	R4133338	R4166689	NR	-	-	-	-
-	1-3/4 "	R4133584	R4133584	R4166897	NR	-	-	-	-
-	1-3/4 "	R4133584	R4133584	R4166897	NR	-	-	-	-
-	1-1/4 "	R4133581	R4133582	R4166923	NR	-	-	-	-
-	1-1/4 "	R4133581	R4133582	R4166923	NR	-	-	-	-
-	1-1/4 "	R4133581	R4133582	R4166923	NR	-	-	-	-
-	1-1/4 "	R4133581	R4133582	R4166923	NR	-	-	-	-
-	1-3/4 "	R4133400	R4133400	R4166917	NR	-	-	-	-
-	1-5/8 "	R4133338	R4133338	R4166689	NR	-	-	-	-
-	1-5/8 "	R4133338	R4133338	R4166689	NR	-	-	-	-
-	1-3/4 "	R4133400	R4133400	R4166917	NR	-	-	-	-
-	1-5/8 "	R4133338	R4133338	R4166689	NR	-	-	-	-
-	1-5/8 "	R4133338	R4133338	R4166689	NR	-	-	-	-
-	1-5/8 "	R4133338	R4133338	R4166689	NR	-	-	-	-
-	1-5/8 "	R4133338	R4133338	R4166689	NR	-	-	-	-
-	1-3/4 "	R4133584	R4133584	R4166897	NR	-	-	-	-
-	1-3/4 "	R4133584	R4133584	R4166897	NR	-	-	-	-
-	1-1/4 "	R4133581	R4133582	R4166923	NR	-	-	-	-
-	1-1/4 "	R4133581	R4133582	R4166923	NR	-	-	-	-
-	1-1/4 "	R4133581	R4133582	R4166923	NR	-	-	-	-
-	1-1/4 "	R4133581	R4133582	R4166923	NR	-	-	-	-
-	1-3/4 "	R4133400	R4133400	R4166917	NR	-	-	-	-
-	1-5/8 "	R4133338	R4133338	R4166689	NR	-	-	-	-
-	1-5/8 "	R4133338	R4133338	R4166689	NR	-	-	-	-
-	1-3/4 "	R4133400	R4133400	R4166917	NR	-	-	-	-
-	1-5/8 "	R4133338	R4133338	R4166689	NR	-	-	-	-
-	1-5/8 "	R4133338	R4133338	R4166689	NR	-	-	-	-
-	1-5/8 "	R4133338	R4133338	R4166689	NR	-	-	-	-
-	1-5/8 "	R4133338	R4133338	R4166689	NR	-	-	-	-
-	1-3/4 "	R4133584	R4133584	R4166897	NR	-	-	-	-
-	1-3/4 "	R4133584	R4133584	R4166897	NR	-	-	-	-
-	1-1/4 "	R4133581	R4133582	R4166923	NR	-	-	-	-
-	1-1/4 "	R4133581	R4133582	R4166923	NR	-	-	-	-
-	1-1/4 "	R4133581	R4133582	R4166923	NR	-	-	-	-
-	1-1/4 "	R4133581	R4133582	R4166923	NR	-	-	-	-
-	1-3/4 "	R4133400	R4133400	R4166917	NR	-	-	-	-
-	1-5/8 "	R4133338	R4133338	R4166689	NR	-	-	-	-
-	1-5/8 "	R4133338	R4133338	R4166689	NR	-	-	-	-
-	1-3/4 "	R4133400	R4133400	R4166917	NR	-	-	-	-
-	1-5/8 "	R4133338	R4133338	R4166689	NR	-	-	-	-
-	1-5/8 "	R4133338	R4133338	R4166689	NR	-	-	-	-
-	1-5/8 "	R4133338	R4133338	R4166689	NR	-	-	-	-
-	1-5/8 "	R4133338	R4133338	R4166689	NR	-	-	-	-
-	1-3/4 "	R4133584	R4133584	R4166897	NR	-	-	-	-
-	1-3/4 "	R4133584	R4133584	R4166897	NR	-	-	-	-
-	1-1/4 "	R4133581	R4133582	R4166923	NR	-	-	-	-
-	1-1/4 "	R4133581	R4133582	R4166923	NR	-	-	-	-
-	1-1/4 "	R4133581	R4133582	R4166923	NR	-	-	-	-
-	1-1/4 "	R4133581	R4133582	R4166923	NR	-	-	-	-
-	1-3/4 "	R4133400	R4133400	R4166917	NR	-	-	-	-

MAKE MODEL YEAR AXLE CODE AXLE WEIGHT	AXLE & BRK. TYPE	BRK. MFG.	BRAKE SIZE	FMSI	MERITOR DISC PAD OR BRAKE SHOE	MERITOR GUIDE PIN OR RETURN SPRING KIT	MERITOR CALIPER HWD. KIT OR RETURN SPRING KIT	MERITOR ADJUSTER KIT (LEFT WHEEL)	MERITOR ADJUSTER KIT (RIGHT WHEEL)
ITE(Cont.)									
2000 SERIES: TRACTOR(Cont.)									
1969 RA302, 303, 306, 328, 351	TRa	WG	15 " x 6 "	4596 - 381	R700381	R40H597	R40H9200	R40H3540	R40H3541
	TRm	WG	15 " x 6 "	4596 - 381	R700381	R40H597	R40H9200	R40H3518	R404148
	TRm	WG	15 " x 7 "	4597 - 383	R700383	R40H597	R40H9200	R40H3518	R404148
RA44, 186	Ra	WG	15 " x 6 "	4596 - 381	R700381	R40H597	R40H9200	R40H3540	R40H3541
	Ra	WG	15 " x 7 "	4597 - 383	R700383	R40H597	R40H9200	R40H3540	R40H3541
	Rm	WG	15 " x 6 "	4596 - 381	R700381	R40H597	R40H9200	R40H3518	R404148
	Rm	WG	15 " x 7 "	4597 - 383	R700383	R40H597	R40H9200	R40H3518	R404148
RA47, 192, 292	Ra	WG	16 " x 6 "	1255 - 386	N/A	R40H597	R40H9200	NLA	NLA
	Rm	WG	16 " x 6 "	1255 - 386	N/A	R40H597	R40H9200	R404149	R404150
3000, 3200, 3300 SC SERIES SCHOOL BUS									
2008 Through May Spicer D800-F 8,000 lb	Fd	Bosch		7654 - D786	-	R4011754	NR	NR	NR
Through May I-100S 10,000 lb	Fd	Bosch		7654 - D786	-	R4011754	NR	NR	NR
Through May S135-S 13,500 lb	Rd	Bosch		7654 - D786	-	R4011754	NR	NR	NR
Through May S150-S 15,500 lb	Rd	Bosch		7654 - D786	-	R4011754	NR	NR	NR
Through May Dana Spicer 17060S 17,500 lb	Rd	Bosch		7654 - D786	-	R4011754	NR	NR	NR
Through May Dana Spicer 19060S 19,000 lb	Rd	Bosch		7654 - D786	-	R4011754	NR	NR	NR
Through May Dana Spicer 21060S 21,000 lb	Rd	Bosch		7654 - D786	-	R4011754	NR	NR	NR
Through May Dana Spicer 23090S 23,000 lb	Rd	Bosch		7654 - D786	-	R4011754	NR	NR	NR
2007 Spicer D800-F 8,000 lb	Fd	Bosch		7654 - D786	-	R4011754	NR	NR	NR
I-100S 10,000 lb	Fd	Bosch		7654 - D786	-	R4011754	NR	NR	NR
S135-S 13,500 lb	Rd	Bosch		7654 - D786	-	R4011754	NR	NR	NR
S150-S 15,500 lb	Rd	Bosch		7654 - D786	-	R4011754	NR	NR	NR
Dana Spicer 17060S 17,500 lb	Rd	Bosch		7654 - D786	-	R4011754	NR	NR	NR
Dana Spicer 19060S 19,000 lb	Rd	Bosch		7654 - D786	-	R4011754	NR	NR	NR
Dana Spicer 21060S 21,000 lb	Rd	Bosch		7654 - D786	-	R4011754	NR	NR	NR
Dana Spicer 23090S 23,000 lb	Rd	Bosch		7654 - D786	-	R4011754	NR	NR	NR
2006 Spicer D800-F 8,000 lb	Fd	Bosch		7654 - D786	-	R4011754	NR	NR	NR
I-100S 10,000 lb	Fd	Bosch		7654 - D786	-	R4011754	NR	NR	NR
S135-S 13,500 lb	Rd	Bosch		7654 - D786	-	R4011754	NR	NR	NR
S150-S 15,500 lb	Rd	Bosch		7654 - D786	-	R4011754	NR	NR	NR
Dana Spicer 17060S 17,500 lb	Rd	Bosch		7654 - D786	-	R4011754	NR	NR	NR

365 - Caliper Loaded with Hardware and Disc Pads

387 - 10 Hole Rotor

MERITOR DRUM OR ROTOR NO.	CALIPER OR CYLINDER BORE SIZE	MERITOR CALIPER OR WHEEL CYLINDER (LEFT)	MERITOR CALIPER OR WHEEL CYLINDER (RIGHT)	MERITOR CALIPER OR WHEEL CYLINDER REPAIR KIT	MERITOR CALIPER PISTON	MERITOR MASTER CYLINDER	MERITOR MASTER CYLINDER KIT	MERITOR BRAKE HOSE (LEFT)	MERITOR BRAKE HOSE (RIGHT)
									ITE(Cont.)
									2000 SERIES: TRACTOR(Cont.)
-	1-5/8 "	R4133338	R4133338	R4166689	NR	-	-	-	-
-	1-5/8 "	R4133338	R4133338	R4166689	NR	-	-	-	-
-	1-3/4 "	R4133400	R4133400	R4166917	NR	-	-	-	-
-	1-5/8 "	R4133338	R4133338	R4166689	NR	-	-	-	-
-	1-5/8 "	R4133338	R4133338	R4166689	NR	-	-	-	-
-	1-5/8 "	R4133338	R4133338	R4166689	NR	-	-	-	-
-	1-5/8 "	R4133338	R4133338	R4166689	NR	-	-	-	-
-	1-3/4 "	R4133584	R4133584	R4166897	NR	-	-	-	-
-	1-3/4 "	R4133584	R4133584	R4166897	NR	-	-	-	-
									3000, 3200, 3300 SC SERIES SCHOOL BUS
23-123550-004[387]	66mm	R424153263	R424153263[365]	R4011752	R4011751	-	-	-	-
23-123550-004[387]	66mm	R424153263	R424153263[365]	R4011752	R4011751	-	-	-	-
23-123550-004[387]	66mm	R424153263	R424153263[365]	R4011752	R4011751	-	-	-	-
23-123550-004[387]	66mm	R424153263	R424153263[365]	R4011752	R4011751	-	-	-	-
23-123550-004[387]	66mm	R424153263	R424153263[365]	R4011752	R4011751	-	-	-	-
23-123550-004[387]	66mm	R424153263	R424153263[365]	R4011752	R4011751	-	-	-	-
23-123550-004[387]	66mm	R424153263	R424153263[365]	R4011752	R4011751	-	-	-	-
23-123550-004[387]	66mm	R424153263	R424153263[365]	R4011752	R4011751	-	-	-	-
23-123550-004[387]	66mm	R424153263	R424153263[365]	R4011752	R4011751	-	-	-	-
23-123550-004[387]	66mm	R424153263	R424153263[365]	R4011752	R4011751	-	-	-	-
23-123550-004[387]	66mm	R424153263	R424153263[365]	R4011752	R4011751	-	-	-	-
23-123550-004[387]	66mm	R424153263	R424153263[365]	R4011752	R4011751	-	-	-	-
23-123550-004[387]	66mm	R424153263	R424153263[365]	R4011752	R4011751	-	-	-	-
23-123550-004[387]	66mm	R424153263	R424153263[365]	R4011752	R4011751	-	-	-	-
23-123550-004[387]	66mm	R424153263	R424153263[365]	R4011752	R4011751	-	-	-	-
23-123550-004[387]	66mm	R424153263	R424153263[365]	R4011752	R4011751	-	-	-	-
23-123550-004[387]	66mm	R424153263	R424153263[365]	R4011752	R4011751	-	-	-	-
23-123550-004[387]	66mm	R424153263	R424153263[365]	R4011752	R4011751	-	-	-	-
23-123550-004[387]	66mm	R424153263	R424153263[365]	R4011752	R4011751	-	-	-	-

MAKE MODEL YEAR AXLE CODE AXLE WEIGHT	AXLE & BRK. TYPE	BRK. MFG.	BRAKE SIZE	FMSI	MERITOR DISC PAD OR BRAKE SHOE	MERITOR GUIDE PIN OR RETURN SPRING KIT	MERITOR CALIPER HWD. KIT OR RETURN SPRING KIT	MERITOR ADJUSTER KIT (LEFT WHEEL)	MERITOR ADJUSTER KIT (RIGHT WHEEL)
ITE(Cont.)									
3000, 3200, 3300 SC SERIES SCHOOL BUS(Cont.)									
2006 Dana Spicer 19060S 19,000 lb	Rd	Bosch		7654 - D786	-	R4011754	NR	NR	NR
Dana Spicer 21060S 21,000 lb	Rd	Bosch		7654 - D786	-	R4011754	NR	NR	NR
Dana Spicer 23090S 23,000 lb	Rd	Bosch		7654 - D786	-	R4011754	NR	NR	NR
2005 Spicer D800-F 8,000 lb	Fd	Bosch		7654 - D786	-	R4011754	NR	NR	NR
I-100S 10,000 lb	Fd	Bosch		7654 - D786	-	R4011754	NR	NR	NR
S135-S 13,500 lb	Rd	Bosch		7654 - D786	-	R4011754	NR	NR	NR
S150-S 15,500 lb	Rd	Bosch		7654 - D786	-	R4011754	NR	NR	NR
Dana Spicer 17060S 17,500 lb	Rd	Bosch		7654 - D786	-	R4011754	NR	NR	NR
Dana Spicer 19060S 19,000 lb	Rd	Bosch		7654 - D786	-	R4011754	NR	NR	NR
Dana Spicer 21060S 21,000 lb	Rd	Bosch		7654 - D786	-	R4011754	NR	NR	NR
Dana Spicer 23090S 23,000 lb	Rd	Bosch		7654 - D786	-	R4011754	NR	NR	NR
2004 Spicer D800-F 8,000 lb	Fd	Bosch		7654 - D786	-	R4011754	NR	NR	NR
I-100S 10,000 lb	Fd	Bosch		7654 - D786	-	R4011754	NR	NR	NR
S135-S 13,500 lb	Rd	Bosch		7654 - D786	-	R4011754	NR	NR	NR
S150-S 15,500 lb	Rd	Bosch		7654 - D786	-	R4011754	NR	NR	NR
Dana Spicer 17060S 17,500 lb	Rd	Bosch		7654 - D786	-	R4011754	NR	NR	NR
Dana Spicer 19060S 19,000 lb	Rd	Bosch		7654 - D786	-	R4011754	NR	NR	NR
Dana Spicer 21060S 21,000 lb	Rd	Bosch		7654 - D786	-	R4011754	NR	NR	NR
Dana Spicer 23090S 23,000 lb	Rd	Bosch		7654 - D786	-	R4011754	NR	NR	NR
2003 Spicer D800-F 8,000 lb	Fd	Bosch		7654 - D786	-	R4011754	NR	NR	NR
I-100S 10,000 lb	Fd	Bosch		7654 - D786	-	R4011754	NR	NR	NR
S135-S 13,500 lb	Rd	Bosch		7654 - D786	-	R4011754	NR	NR	NR
S150-S 15,500 lb	Rd	Bosch		7654 - D786	-	R4011754	NR	NR	NR
Dana Spicer 17060S 17,500 lb	Rd	Bosch		7654 - D786	-	R4011754	NR	NR	NR
Dana Spicer 19060S 19,000 lb	Rd	Bosch		7654 - D786	-	R4011754	NR	NR	NR
Dana Spicer 21060S 21,000 lb	Rd	Bosch		7654 - D786	-	R4011754	NR	NR	NR
Dana Spicer 23090S 23,000 lb	Rd	Bosch		7654 - D786	-	R4011754	NR	NR	NR
2002 Spicer D800-F 8,000 lb	Fd	Bosch		7654 - D786	-	R4011754	NR	NR	NR
I-100S 10,000 lb	Fd	Bosch		7654 - D786	-	R4011754	NR	NR	NR
S135-S 13,500 lb	Rd	Bosch		7654 - D786	-	R4011754	NR	NR	NR

365 - Caliper Loaded with Hardware and Disc Pads

387 - 10 Hole Rotor

MERITOR DRUM OR ROTOR NO.	CALIPER OR CYLINDER BORE SIZE	MERITOR CALIPER OR WHEEL CYLINDER (LEFT)	MERITOR CALIPER OR WHEEL CYLINDER (RIGHT)	MERITOR CALIPER OR WHEEL CYLINDER REPAIR KIT	MERITOR CALIPER PISTON	MERITOR MASTER CYLINDER	MERITOR MASTER CYLINDER KIT	MERITOR BRAKE HOSE (LEFT)	MERITOR BRAKE HOSE (RIGHT)
ITE(Cont.)									
3000, 3200, 3300 SC SERIES SCHOOL BUS(Cont.)									
23-123550-004[387]	66mm	R424153263	R424153263[365]	R4011752	R4011751	-	-	-	-
23-123550-004[387]	66mm	R424153263	R424153263[365]	R4011752	R4011751	-	-	-	-
23-123550-004[387]	66mm	R424153263	R424153263[365]	R4011752	R4011751	-	-	-	-
23-123550-004[387]	66mm	R424153263	R424153263[365]	R4011752	R4011751	-	-	-	-
23-123550-004[387]	66mm	R424153263	R424153263[365]	R4011752	R4011751	-	-	-	-
23-123550-004[387]	66mm	R424153263	R424153263[365]	R4011752	R4011751	-	-	-	-
23-123550-004[387]	66mm	R424153263	R424153263[365]	R4011752	R4011751	-	-	-	-
23-123550-004[387]	66mm	R424153263	R424153263[365]	R4011752	R4011751	-	-	-	-
23-123550-004[387]	66mm	R424153263	R424153263[365]	R4011752	R4011751	-	-	-	-
23-123550-004[387]	66mm	R424153263	R424153263[365]	R4011752	R4011751	-	-	-	-
23-123550-004[387]	66mm	R424153263	R424153263[365]	R4011752	R4011751	-	-	-	-
23-123550-004[387]	66mm	R424153263	R424153263[365]	R4011752	R4011751	-	-	-	-
23-123550-004[387]	66mm	R424153263	R424153263[365]	R4011752	R4011751	-	-	-	-
23-123550-004[387]	66mm	R424153263	R424153263[365]	R4011752	R4011751	-	-	-	-
23-123550-004[387]	66mm	R424153263	R424153263[365]	R4011752	R4011751	-	-	-	-
23-123550-004[387]	66mm	R424153263	R424153263[365]	R4011752	R4011751	-	-	-	-
23-123550-004[387]	66mm	R424153263	R424153263[365]	R4011752	R4011751	-	-	-	-
23-123550-004[387]	66mm	R424153263	R424153263[365]	R4011752	R4011751	-	-	-	-
23-123550-004[387]	66mm	R424153263	R424153263[365]	R4011752	R4011751	-	-	-	-
23-123550-004[387]	66mm	R424153263	R424153263[365]	R4011752	R4011751	-	-	-	-
23-123550-004[387]	66mm	R424153263	R424153263[365]	R4011752	R4011751	-	-	-	-
23-123550-004[387]	66mm	R424153263	R424153263[365]	R4011752	R4011751	-	-	-	-
23-123550-004[387]	66mm	R424153263	R424153263[365]	R4011752	R4011751	-	-	-	-
23-123550-004[387]	66mm	R424153263	R424153263[365]	R4011752	R4011751	-	-	-	-
23-123550-004[387]	66mm	R424153263	R424153263[365]	R4011752	R4011751	-	-	-	-
23-123550-004[387]	66mm	R424153263	R424153263[365]	R4011752	R4011751	-	-	-	-
23-123550-004[387]	66mm	R424153263	R424153263[365]	R4011752	R4011751	-	-	-	-

MAKE MODEL YEAR AXLE CODE AXLE WEIGHT	AXLE & BRK. TYPE	BRK. MFG.	BRAKE SIZE	FMSI	MERITOR DISC PAD OR BRAKE SHOE	MERITOR GUIDE PIN OR RETURN SPRING KIT	MERITOR CALIPER HWD. KIT OR RETURN SPRING KIT	MERITOR ADJUSTER KIT (LEFT WHEEL)	MERITOR ADJUSTER KIT (RIGHT WHEEL)
ITE(Cont.)									
3000, 3200, 3300 SC SERIES SCHOOL BUS(Cont.)									
2002 S150-S 15,500 lb	Rd	Bosch		7654 - D786	-	R4011754	NR	NR	NR
Dana Spicer 17060S 17,500 lb	Rd	Bosch		7654 - D786	-	R4011754	NR	NR	NR
Dana Spicer 19060S 19,000 lb	Rd	Bosch		7654 - D786	-	R4011754	NR	NR	NR
Dana Spicer 21060S 21,000 lb	Rd	Bosch		7654 - D786	-	R4011754	NR	NR	NR
Dana Spicer 23090S 23,000 lb	Rd	Bosch		7654 - D786	-	R4011754	NR	NR	NR
2001 Spicer D800-F 8,000 lb	Fd	Bosch		7654 - D786	-	R4011754	NR	NR	NR
I-100S 10,000 lb	Fd	Bosch		7654 - D786	-	R4011754	NR	NR	NR
S135-S 13,500 lb	Rd	Bosch		7654 - D786	-	R4011754	NR	NR	NR
S150-S 15,500 lb	Rd	Bosch		7654 - D786	-	R4011754	NR	NR	NR
Dana Spicer 17060S 17,500 lb	Rd	Bosch		7654 - D786	-	R4011754	NR	NR	NR
Dana Spicer 19060S 19,000 lb	Rd	Bosch		7654 - D786	-	R4011754	NR	NR	NR
Dana Spicer 21060S 21,000 lb	Rd	Bosch		7654 - D786	-	R4011754	NR	NR	NR
Dana Spicer 23090S 23,000 lb	Rd	Bosch		7654 - D786	-	R4011754	NR	NR	NR
2000 Spicer D800-F 8,000 lb	Fd	Bosch		7654 - D786	-	R4011754	NR	NR	NR
I-100S 10,000 lb	Fd	Bosch		7654 - D786	-	R4011754	NR	NR	NR
S135-S 13,500 lb	Rd	Bosch		7654 - D786	-	R4011754	NR	NR	NR
S150-S 15,500 lb	Rd	Bosch		7654 - D786	-	R4011754	NR	NR	NR
Dana Spicer 17060S 17,500 lb	Rd	Bosch		7654 - D786	-	R4011754	NR	NR	NR
Dana Spicer 19060S 19,000 lb	Rd	Bosch		7654 - D786	-	R4011754	NR	NR	NR
Dana Spicer 21060S 21,000 lb	Rd	Bosch		7654 - D786	-	R4011754	NR	NR	NR
Dana Spicer 23090S 23,000 lb	Rd	Bosch		7654 - D786	-	R4011754	NR	NR	NR
3000, 3400, 3600, 3800, 3900 SERIES: SCHOOL BUS									
1999	Fd	BX		7108 - D184	MD184	R40H5010	R40H5519	NR	NR
	Fd	BX		7108 - D184	MD184	R40H5010	R40H5519	NR	NR
	Fd	BX		7142 - D225	MD225	R40H5010	R40H5522	NR	NR
	Fd	BX		7142 - D225	MD225	R40H5010	R40H5522	NR	NR
	Fd	BX		7142 - D225	MD225	R40H5010	R40H5522	NR	NR
	Fd	BX		7108 - D184	MD184	R40H5010	R40H5519	NR	NR
	Fd	BX		7108 - D184	MD184	R40H5010	R40H5519	NR	NR
	Fd	BX		7108 - D184	MD184	R40H5010	R40H5519	NR	NR
	Fd	BX		7108 - D184	MD184	R40H5010	R40H5519	NR	NR
	Fd	BX		7108 - D184	MD184	R40H5010	R40H5519	NR	NR
	Fd	BX		7142 - D225	MD225	R40H5010	R40H5522	NR	NR
	Rd	BX		7142 - D225	MD225	R40H5010	R40H5522	NR	NR
	Rd	BX		7108 - D184	MD184	R40H5010	R40H5519	NR	NR
	Rd	BX		7142 - D225	MD225	R40H5010	R40H5522	NR	NR
	Rd	BX		7108 - D184	MD184	R40H5010	R40H5519	NR	NR
1998	Fd	BX		7108 - D184	MD184	R40H5010	R40H5519	NR	NR

37 - Also available as a New unit
266 - 10 Stud, Hat Shaped
271 - 6 Stud, Hat Shape
72 - Phenolic/Steel Face
267 - 10 Stud, U Shaped
365 - Caliper Loaded with Hardware and Disc Pads
201 - Steel Piston
268 - 5 Stud, Hat Shape
387 - 10 Hole Rotor

MERITOR DRUM OR ROTOR NO.	CALIPER OR CYLINDER BORE SIZE	MERITOR CALIPER OR WHEEL CYLINDER (LEFT)	MERITOR CALIPER OR WHEEL CYLINDER (RIGHT)	MERITOR CALIPER OR WHEEL CYLINDER REPAIR KIT	MERITOR CALIPER PISTON	MERITOR MASTER CYLINDER	MERITOR MASTER CYLINDER KIT	MERITOR BRAKE HOSE (LEFT)	MERITOR BRAKE HOSE (RIGHT)
									ITE(Cont.)
						3000, 3200, 3300 SC SERIES SCHOOL BUS(Cont.)			
23-123550-004[387]	66mm	R424153263	R424153263[365]	R4011752	R4011751	-	-	-	-
23-123550-004[387]	66mm	R424153263	R424153263[365]	R4011752	R4011751	-	-	-	-
23-123550-004[387]	66mm	R424153263	R424153263[365]	R4011752	R4011751	-	-	-	-
23-123550-004[387]	66mm	R424153263	R424153263[365]	R4011752	R4011751	-	-	-	-
23-123550-004[387]	66mm	R424153263	R424153263[365]	R4011752	R4011751	-	-	-	-
23-123550-004[387]	66mm	R424153263	R424153263[365]	R4011752	R4011751	-	-	-	-
23-123550-004[387]	66mm	R424153263	R424153263[365]	R4011752	R4011751	-	-	-	-
23-123550-004[387]	66mm	R424153263	R424153263[365]	R4011752	R4011751	-	-	-	-
23-123550-004[387]	66mm	R424153263	R424153263[365]	R4011752	R4011751	-	-	-	-
23-123550-004[387]	66mm	R424153263	R424153263[365]	R4011752	R4011751	-	-	-	-
23-123550-004[387]	66mm	R424153263	R424153263[365]	R4011752	R4011751	-	-	-	-
23-123550-004[387]	66mm	R424153263	R424153263[365]	R4011752	R4011751	-	-	-	-
23-123550-004[387]	66mm	R424153263	R424153263[365]	R4011752	R4011751	-	-	-	-
23-123550-004[387]	66mm	R424153263	R424153263[365]	R4011752	R4011751	-	-	-	-
23-123550-004[387]	66mm	R424153263	R424153263[365]	R4011752	R4011751	-	-	-	-
23-123550-004[387]	66mm	R424153263	R424153263[365]	R4011752	R4011751	-	-	-	-
23-123550-004[387]	66mm	R424153263	R424153263[365]	R4011752	R4011751	-	-	-	-
23-123550-004[387]	66mm	R424153263	R424153263[365]	R4011752	R4011751	-	-	-	-
23-123550-004[387]	66mm	R424153263	R424153263[365]	R4011752	R4011751	-	-	-	-
23-123550-004[387]	66mm	R424153263	R424153263[365]	R4011752	R4011751	-	-	-	-
						3000, 3400, 3600, 3800, 3900 SERIES: SCHOOL BUS			
23-123572-004[271]	2-19/32 "	R42R55314	R42R55314[37]	R40107771	R4090100P[72]	-	-	-	-
R44141476[268]	3-3/8 "	R42R55099	R42R55098[37]	R4066780	R4090021[201]	-	-	-	-
R44141476[268]	2-7/8 "	R42R55250	R42R55250[37]	R4066365	R4090096[72]	-	-	-	-
23-123572-004[271]	2-7/8 "	R42R55250	R42R55250[37]	R4066365	R4090096[72]	-	-	-	-
R44141608[267]	2-7/8 "	R42R55250	R42R55250[37]	R4066365	R4090096[72]	-	-	-	-
R44141608[267]	2-19/32 "	R42R55314	R42R55314[37]	R40107771	R4090100P[72]	-	-	-	-
23-123552-004[266]	2-19/32 "	R42R55314	R42R55314[37]	R40107771	R4090100P[72]	-	-	-	-
23-123572-004[271]	3-3/8 "	R42R55099	R42R55098[37]	R4066780	R4090021[201]	-	-	-	-
23-123552-004[266]	3-3/8 "	R42R55099	R42R55098[37]	R4066780	R4090021[201]	-	-	-	-
R44141476[268]	2-19/32 "	R42R55314	R42R55314[37]	R40107771	R4090100P[72]	-	-	-	-
23-123552-004[266]	2-7/8 "	R42R55250	R42R55250[37]	R4066365	R4090096[72]	-	-	-	-
23-123572-004[271]	2-7/8 "	R42R55250	R42R55250[37]	R4066365	R4090096[72]	-	-	-	-
23-123572-004[271]	2-19/32 "	R42R55314	R42R55314[37]	R40107771	R4090100P[72]	-	-	-	-
23-123552-004[266]	2-7/8 "	R42R55250	R42R55250[37]	R4066365	R4090096[72]	-	-	-	-
23-123552-004[266]	2-19/32 "	R42R55314	R42R55314[37]	R40107771	R4090100P[72]	-	-	-	-
23-123552-004[266]	3-3/8 "	R42R55099	R42R55098[37]	R4066780	R4090021[201]	-	-	-	-

MAKE MODEL YEAR AXLE CODE AXLE WEIGHT	AXLE & BRK. TYPE	BRK. MFG.	BRAKE SIZE	FMSI	MERITOR DISC PAD OR BRAKE SHOE	MERITOR GUIDE PIN OR RETURN SPRING KIT	MERITOR CALIPER HWD. KIT OR RETURN SPRING KIT	MERITOR ADJUSTER KIT (LEFT WHEEL)	MERITOR ADJUSTER KIT (RIGHT WHEEL)
ITE(Cont.)									
3000, 3400, 3600, 3800, 3900 SERIES: SCHOOL BUS(Cont.)									
1998									
	Fd	BX		7142 - D225	MD225	R40H5010	R40H5522	NR	NR
	Fd	BX		7108 - D184	MD184	R40H5010	R40H5519	NR	NR
	Fd	BX		7108 - D184	MD184	R40H5010	R40H5519	NR	NR
	Fd	BX		7142 - D225	MD225	R40H5010	R40H5522	NR	NR
	Fd	BX		7108 - D184	MD184	R40H5010	R40H5519	NR	NR
	Fd	BX		7108 - D184	MD184	R40H5010	R40H5519	NR	NR
	Fd	BX		7142 - D225	MD225	R40H5010	R40H5522	NR	NR
	Fd	BX		7142 - D225	MD225	R40H5010	R40H5522	NR	NR
	Fd	BX		7108 - D184	MD184	R40H5010	R40H5519	NR	NR
	Fd	BX		7108 - D184	MD184	R40H5010	R40H5519	NR	NR
	Rd	BX		7142 - D225	MD225	R40H5010	R40H5522	NR	NR
	Rd	BX		7142 - D225	MD225	R40H5010	R40H5522	NR	NR
	Rd	BX		7108 - D184	MD184	R40H5010	R40H5519	NR	NR
	Rd	BX		7108 - D184	MD184	R40H5010	R40H5519	NR	NR
1997									
	Fd	BX		7108 - D184	MD184	R40H5010	R40H5519	NR	NR
	Fd	BX		7142 - D225	MD225	R40H5010	R40H5522	NR	NR
	Fd	BX		7108 - D184	MD184	R40H5010	R40H5519	NR	NR
	Fd	BX		7108 - D184	MD184	R40H5010	R40H5519	NR	NR
	Fd	BX		7142 - D225	MD225	R40H5010	R40H5522	NR	NR
	Fd	BX		7108 - D184	MD184	R40H5010	R40H5519	NR	NR
	Fd	BX		7108 - D184	MD184	R40H5010	R40H5519	NR	NR
	Fd	BX		7142 - D225	MD225	R40H5010	R40H5522	NR	NR
	Fd	BX		7142 - D225	MD225	R40H5010	R40H5522	NR	NR
	Fd	BX		7108 - D184	MD184	R40H5010	R40H5519	NR	NR
	Fd	BX		7108 - D184	MD184	R40H5010	R40H5519	NR	NR
	Rd	BX		7142 - D225	MD225	R40H5010	R40H5522	NR	NR
	Rd	BX		7108 - D184	MD184	R40H5010	R40H5519	NR	NR
	Rd	BX		7142 - D225	MD225	R40H5010	R40H5522	NR	NR
	Rd	BX		7108 - D184	MD184	R40H5010	R40H5519	NR	NR
1996									
	Fd	BX		7108 - D184	MD184	R40H5010	R40H5519	NR	NR
	Fd	BX		7142 - D225	MD225	R40H5010	R40H5522	NR	NR
	Fd	BX		7108 - D184	MD184	R40H5010	R40H5519	NR	NR
	Fd	BX		7142 - D225	MD225	R40H5010	R40H5522	NR	NR
	Fd	BX		7108 - D184	MD184	R40H5010	R40H5519	NR	NR
	Fd	BX		7108 - D184	MD184	R40H5010	R40H5519	NR	NR
	Fd	BX		7108 - D184	MD184	R40H5010	R40H5519	NR	NR
	Fd	BX		7108 - D184	MD184	R40H5010	R40H5519	NR	NR
	Fd	BX		7142 - D225	MD225	R40H5010	R40H5522	NR	NR
	Fd	BX		7108 - D184	MD184	R40H5010	R40H5519	NR	NR
	Fd	BX		7142 - D225	MD225	R40H5010	R40H5522	NR	NR
	Rd	BX		7142 - D225	MD225	R40H5010	R40H5522	NR	NR
	Rd	BX		7108 - D184	MD184	R40H5010	R40H5519	NR	NR
	Rd	BX		7142 - D225	MD225	R40H5010	R40H5522	NR	NR
	Rd	BX		7108 - D184	MD184	R40H5010	R40H5519	NR	NR
1995									
	Fd	BX		7142 - D225	MD225	R40H5010	R40H5522	NR	NR
	Fd	BX		7108 - D184	MD184	R40H5010	R40H5519	NR	NR
	Fd	BX		7108 - D184	MD184	R40H5010	R40H5519	NR	NR
	Fd	BX		7108 - D184	MD184	R40H5010	R40H5519	NR	NR
	Fd	BX		7142 - D225	MD225	R40H5010	R40H5522	NR	NR
	Fd	BX		7108 - D184	MD184	R40H5010	R40H5519	NR	NR
	Fd	BX		7142 - D225	MD225	R40H5010	R40H5522	NR	NR
	Fd	BX		7108 - D184	MD184	R40H5010	R40H5519	NR	NR
	Fd	BX		7108 - D184	MD184	R40H5010	R40H5519	NR	NR
	Fd	BX		7108 - D184	MD184	R40H5010	R40H5519	NR	NR
	Fd	BX		7142 - D225	MD225	R40H5010	R40H5522	NR	NR
	Rd	BX		7142 - D225	MD225	R40H5010	R40H5522	NR	NR
	Rd	BX		7142 - D225	MD225	R40H5010	R40H5522	NR	NR
	Rd	BX		7108 - D184	MD184	R40H5010	R40H5519	NR	NR
	Rd	BX		7108 - D184	MD184	R40H5010	R40H5519	NR	NR
1994									
	Fd	BX		7142 - D225	MD225	R40H5010	R40H5522	NR	NR

37 - Also available as a New unit
266 - 10 Stud, Hat Shaped
271 - 6 Stud, Hat Shape

72 - Phenolic/Steel Face
267 - 10 Stud, U Shaped

201 - Steel Piston
268 - 5 Stud, Hat Shape

MERITOR DRUM OR ROTOR NO.	CALIPER OR CYLINDER BORE SIZE	MERITOR CALIPER OR WHEEL CYLINDER (LEFT)	MERITOR CALIPER OR WHEEL CYLINDER (RIGHT)	MERITOR CALIPER OR WHEEL CYLINDER REPAIR KIT	MERITOR CALIPER PISTON	MERITOR MASTER CYLINDER	MERITOR MASTER CYLINDER KIT	MERITOR BRAKE HOSE (LEFT)	MERITOR BRAKE HOSE (RIGHT)
									ITE(Cont.)
					3000, 3400, 3600, 3800, 3900 SERIES: SCHOOL BUS(Cont.)				
23-123552-004[266]	2-7/8 "	R42R55250	R42R55250[37]	R4066365	R4090096[72]	-	-	-	-
R44141476[268]	2-19/32 "	R42R55314	R42R55314[37]	R40107771	R4090100P[72]	-	-	-	-
R44141608[267]	2-19/32 "	R42R55314	R42R55314[37]	R40107771	R4090100P[72]	-	-	-	-
23-123572-004[271]	2-7/8 "	R42R55250	R42R55250[37]	R4066365	R4090096[72]	-	-	-	-
23-123552-004[266]	2-19/32 "	R42R55314	R42R55314[37]	R40107771	R4090100P[72]	-	-	-	-
23-123572-004[271]	3-3/8 "	R42R55099	R42R55098[37]	R4066780	R4090021[201]	-	-	-	-
R44141608[267]	2-7/8 "	R42R55250	R42R55250[37]	R4066365	R4090096[72]	-	-	-	-
R44141476[268]	2-7/8 "	R42R55250	R42R55250[37]	R4066365	R4090096[72]	-	-	-	-
23-123572-004[271]	2-19/32 "	R42R55314	R42R55314[37]	R40107771	R4090100P[72]	-	-	-	-
R44141476[268]	3-3/8 "	R42R55099	R42R55098[37]	R4066780	R4090021[201]	-	-	-	-
23-123572-004[271]	2-7/8 "	R42R55250	R42R55250[37]	R4066365	R4090096[72]	-	-	-	-
23-123552-004[266]	2-7/8 "	R42R55250	R42R55250[37]	R4066365	R4090096[72]	-	-	-	-
23-123572-004[271]	2-19/32 "	R42R55314	R42R55314[37]	R40107771	R4090100P[72]	-	-	-	-
23-123552-004[266]	2-19/32 "	R42R55314	R42R55314[37]	R40107771	R4090100P[72]	-	-	-	-
23-123552-004[266]	3-3/8 "	R42R55099	R42R55098[37]	R4066780	R4090021[201]	-	-	-	-
23-123552-004[266]	2-7/8 "	R42R55250	R42R55250[37]	R4066365	R4090096[72]	-	-	-	-
R44141476[268]	2-19/32 "	R42R55314	R42R55314[37]	R40107771	R4090100P[72]	-	-	-	-
R44141608[267]	2-19/32 "	R42R55314	R42R55314[37]	R40107771	R4090100P[72]	-	-	-	-
R44141608[267]	2-7/8 "	R42R55250	R42R55250[37]	R4066365	R4090096[72]	-	-	-	-
23-123552-004[266]	2-19/32 "	R42R55314	R42R55314[37]	R40107771	R4090100P[72]	-	-	-	-
23-123572-004[271]	2-19/32 "	R42R55314	R42R55314[37]	R40107771	R4090100P[72]	-	-	-	-
R44141476[268]	2-7/8 "	R42R55250	R42R55250[37]	R4066365	R4090096[72]	-	-	-	-
23-123572-004[271]	2-7/8 "	R42R55250	R42R55250[37]	R4066365	R4090096[72]	-	-	-	-
23-123572-004[271]	3-3/8 "	R42R55099	R42R55098[37]	R4066780	R4090021[201]	-	-	-	-
R44141476[268]	3-3/8 "	R42R55099	R42R55098[37]	R4066780	R4090021[201]	-	-	-	-
23-123572-004[271]	2-7/8 "	R42R55250	R42R55250[37]	R4066365	R4090096[72]	-	-	-	-
23-123572-004[271]	2-19/32 "	R42R55314	R42R55314[37]	R40107771	R4090100P[72]	-	-	-	-
23-123552-004[266]	2-7/8 "	R42R55250	R42R55250[37]	R4066365	R4090096[72]	-	-	-	-
23-123552-004[266]	2-19/32 "	R42R55314	R42R55314[37]	R40107771	R4090100P[72]	-	-	-	-
23-123552-004[266]	3-3/8 "	R42R55099	R42R55098[37]	R4066780	R4090021[201]	-	-	-	-
23-123552-004[266]	2-7/8 "	R42R55250	R42R55250[37]	R4066365	R4090096[72]	-	-	-	-
R44141476[268]	2-19/32 "	R42R55314	R42R55314[37]	R40107771	R4090100P[72]	-	-	-	-
R44141608[267]	2-7/8 "	R42R55250	R42R55250[37]	R4066365	R4090096[72]	-	-	-	-
R44141608[267]	2-19/32 "	R42R55314	R42R55314[37]	R40107771	R4090100P[72]	-	-	-	-
R44141476[268]	3-3/8 "	R42R55099	R42R55098[37]	R4066780	R4090021[201]	-	-	-	-
23-123572-004[271]	2-19/32 "	R42R55314	R42R55314[37]	R40107771	R4090100P[72]	-	-	-	-
23-123552-004[266]	2-19/32 "	R42R55314	R42R55314[37]	R40107771	R4090100P[72]	-	-	-	-
R44141476[268]	2-7/8 "	R42R55250	R42R55250[37]	R4066365	R4090096[72]	-	-	-	-
23-123572-004[271]	2-7/8 "	R42R55250	R42R55250[37]	R4066365	R4090096[72]	-	-	-	-
23-123552-004[266]	2-19/32 "	R42R55314	R42R55314[37]	R40107771	R4090100P[72]	-	-	-	-
23-123552-004[266]	2-7/8 "	R42R55250	R42R55250[37]	R4066365	R4090096[72]	-	-	-	-
23-123572-004[271]	2-19/32 "	R42R55314	R42R55314[37]	R40107771	R4090100P[72]	-	-	-	-
23-123552-004[266]	2-7/8 "	R42R55250	R42R55250[37]	R4066365	R4090096[72]	-	-	-	-
23-123552-004[266]	3-3/8 "	R42R55099	R42R55098[37]	R4066780	R4090021[201]	-	-	-	-
R44141476[268]	2-19/32 "	R42R55314	R42R55314[37]	R40107771	R4090100P[72]	-	-	-	-
R44141476[268]	3-3/8 "	R42R55099	R42R55098[37]	R4066780	R4090021[201]	-	-	-	-
R44141608[267]	2-7/8 "	R42R55250	R42R55250[37]	R4066365	R4090096[72]	-	-	-	-
23-123572-004[271]	2-19/32 "	R42R55314	R42R55314[37]	R40107771	R4090100P[72]	-	-	-	-
23-123572-004[271]	2-7/8 "	R42R55250	R42R55250[37]	R4066365	R4090096[72]	-	-	-	-
23-123572-004[271]	3-3/8 "	R42R55099	R42R55098[37]	R4066780	R4090021[201]	-	-	-	-
23-123552-004[266]	2-19/32 "	R42R55314	R42R55314[37]	R40107771	R4090100P[72]	-	-	-	-
R44141608[267]	2-19/32 "	R42R55314	R42R55314[37]	R40107771	R4090100P[72]	-	-	-	-
R44141476[268]	2-7/8 "	R42R55250	R42R55250[37]	R4066365	R4090096[72]	-	-	-	-
23-123572-004[271]	2-7/8 "	R42R55250	R42R55250[37]	R4066365	R4090096[72]	-	-	-	-
23-123552-004[266]	2-7/8 "	R42R55250	R42R55250[37]	R4066365	R4090096[72]	-	-	-	-
23-123552-004[266]	2-19/32 "	R42R55314	R42R55314[37]	R40107771	R4090100P[72]	-	-	-	-
23-123572-004[271]	2-19/32 "	R42R55314	R42R55314[37]	R40107771	R4090100P[72]	-	-	-	-
R44141476[268]	2-7/8 "	R42R55250	R42R55250[37]	R4066365	R4090096[72]	-	-	-	-

MAKE MODEL YEAR AXLE CODE AXLE WEIGHT	AXLE & BRK. TYPE	BRK. MFG.	BRAKE SIZE	FMSI	MERITOR DISC PAD OR BRAKE SHOE	MERITOR GUIDE PIN OR RETURN SPRING KIT	MERITOR CALIPER HWD. KIT OR RETURN SPRING KIT	MERITOR ADJUSTER KIT (LEFT WHEEL)	MERITOR ADJUSTER KIT (RIGHT WHEEL)
ITE(Cont.)									
3000, 3400, 3600, 3800, 3900 SERIES: SCHOOL BUS(Cont.)									
1994									
	Fd	BX		7108 - D184	MD184	R40H5010	R40H5519	NR	NR
	Fd	BX		7108 - D184	MD184	R40H5010	R40H5519	NR	NR
	Fd	BX		7108 - D184	MD184	R40H5010	R40H5519	NR	NR
	Fd	BX		7142 - D225	MD225	R40H5010	R40H5522	NR	NR
	Fd	BX		7108 - D184	MD184	R40H5010	R40H5519	NR	NR
	Fd	BX		7142 - D225	MD225	R40H5010	R40H5522	NR	NR
	Fd	BX		7142 - D225	MD225	R40H5010	R40H5522	NR	NR
	Fd	BX		7108 - D184	MD184	R40H5010	R40H5519	NR	NR
	Fd	BX		7108 - D184	MD184	R40H5010	R40H5519	NR	NR
	Fd	BX		7108 - D184	MD184	R40H5010	R40H5519	NR	NR
	Rd	BX		7142 - D225	MD225	R40H5010	R40H5522	NR	NR
	Rd	BX		7108 - D184	MD184	R40H5010	R40H5519	NR	NR
	Rd	BX		7108 - D184	MD184	R40H5010	R40H5519	NR	NR
	Rd	BX		7142 - D225	MD225	R40H5010	R40H5522	NR	NR
1993									
	Fd	BX		7108 - D184	MD184	R40H5010	R40H5519	NR	NR
	Fd	BX		7108 - D184	MD184	R40H5010	R40H5519	NR	NR
	Fd	BX		7142 - D225	MD225	R40H5010	R40H5522	NR	NR
	Fd	BX		7108 - D184	MD184	R40H5010	R40H5519	NR	NR
	Fd	BX		7142 - D225	MD225	R40H5010	R40H5522	NR	NR
	Fd	BX		7108 - D184	MD184	R40H5010	R40H5519	NR	NR
	Fd	BX		7108 - D184	MD184	R40H5010	R40H5519	NR	NR
	Fd	BX		7142 - D225	MD225	R40H5010	R40H5522	NR	NR
	Fd	BX		7108 - D184	MD184	R40H5010	R40H5519	NR	NR
	Fd	BX		7108 - D184	MD184	R40H5010	R40H5519	NR	NR
	Fd	BX		7142 - D225	MD225	R40H5010	R40H5522	NR	NR
	Rd	BX		7142 - D225	MD225	R40H5010	R40H5522	NR	NR
	Rd	BX		7108 - D184	MD184	R40H5010	R40H5519	NR	NR
	Rd	BX		7108 - D184	MD184	R40H5010	R40H5519	NR	NR
	Rd	BX		7142 - D225	MD225	R40H5010	R40H5522	NR	NR
1992									
	Fd	BX		7108 - D184	MD184	R40H5010	R40H5519	NR	NR
	Fd	BX		7142 - D225	MD225	R40H5010	R40H5522	NR	NR
	Fd	BX		7142 - D225	MD225	R40H5010	R40H5522	NR	NR
	Fd	BX		7108 - D184	MD184	R40H5010	R40H5519	NR	NR
	Fd	BX		7108 - D184	MD184	R40H5010	R40H5519	NR	NR
	Fd	BX		7142 - D225	MD225	R40H5010	R40H5522	NR	NR
	Fd	BX		7108 - D184	MD184	R40H5010	R40H5519	NR	NR
	Fd	BX		7108 - D184	MD184	R40H5010	R40H5519	NR	NR
	Fd	BX		7108 - D184	MD184	R40H5010	R40H5519	NR	NR
	Fd	BX		7108 - D184	MD184	R40H5010	R40H5519	NR	NR
	Fd	BX		7142 - D225	MD225	R40H5010	R40H5522	NR	NR
	Rd	BX		7142 - D225	MD225	R40H5010	R40H5522	NR	NR
	Rd	BX		7142 - D225	MD225	R40H5010	R40H5522	NR	NR
	Rd	BX		7108 - D184	MD184	R40H5010	R40H5519	NR	NR
	Rd	BX		7108 - D184	MD184	R40H5010	R40H5519	NR	NR
1991									
	Fd	BX		7108 - D184	MD184	R40H5010	R40H5519	NR	NR
	Fd	BX		7142 - D225	MD225	R40H5010	R40H5522	NR	NR
	Fd	BX		7108 - D184	MD184	R40H5010	R40H5519	NR	NR
	Fd	BX		7108 - D184	MD184	R40H5010	R40H5519	NR	NR
	Fd	BX		7108 - D184	MD184	R40H5010	R40H5519	NR	NR
	Fd	BX		7142 - D225	MD225	R40H5010	R40H5522	NR	NR
	Fd	BX		7142 - D225	MD225	R40H5010	R40H5522	NR	NR
	Fd	BX		7142 - D225	MD225	R40H5010	R40H5522	NR	NR
	Fd	BX		7108 - D184	MD184	R40H5010	R40H5519	NR	NR
	Fd	BX		7108 - D184	MD184	R40H5010	R40H5519	NR	NR
	Fd	BX		7108 - D184	MD184	R40H5010	R40H5519	NR	NR
	Rd	BX		7142 - D225	MD225	R40H5010	R40H5522	NR	NR
	Rd	BX		7108 - D184	MD184	R40H5010	R40H5519	NR	NR
	Rd	BX		7142 - D225	MD225	R40H5010	R40H5522	NR	NR
	Rd	BX		7108 - D184	MD184	R40H5010	R40H5519	NR	NR
1990									
	Fd	BX		7142 - D225	MD225	R40H5010	R40H5522	NR	NR

37 - Also available as a New unit
266 - 10 Stud, Hat Shaped
271 - 6 Stud, Hat Shape

72 - Phenolic/Steel Face
267 - 10 Stud, U Shaped

201 - Steel Piston
268 - 5 Stud, Hat Shape

MERITOR DRUM OR ROTOR NO.	CALIPER OR CYLINDER BORE SIZE	MERITOR CALIPER OR WHEEL CYLINDER (LEFT)	MERITOR CALIPER OR WHEEL CYLINDER (RIGHT)	MERITOR CALIPER OR WHEEL CYLINDER REPAIR KIT	MERITOR CALIPER PISTON	MERITOR MASTER CYLINDER	MERITOR MASTER CYLINDER KIT	MERITOR BRAKE HOSE (LEFT)	MERITOR BRAKE HOSE (RIGHT)
									ITE(Cont.)
					3000, 3400, 3600, 3800, 3900 SERIES: SCHOOL BUS(Cont.)				
R44141476[268]	2-19/32 "	R42R55314	R42R55314[37]	R40107771	R4090100P[72]	-	-	-	-
23-123552-004[266]	3-3/8 "	R42R55099	R42R55098[37]	R4066780	R4090021[201]	-	-	-	-
R44141476[268]	3-3/8 "	R42R55099	R42R55098[37]	R4066780	R4090021[201]	-	-	-	-
23-123552-004[266]	2-7/8 "	R42R55250	R42R55250[37]	R4066365	R4090096[72]	-	-	-	-
23-123572-004[271]	2-19/32 "	R42R55314	R42R55314[37]	R40107771	R4090100P[72]	-	-	-	-
R44141608[267]	2-7/8 "	R42R55250	R42R55250[37]	R4066365	R4090096[72]	-	-	-	-
23-123572-004[271]	2-7/8 "	R42R55250	R42R55250[37]	R4066365	R4090096[72]	-	-	-	-
R44141608[267]	2-19/32 "	R42R55314	R42R55314[37]	R40107771	R4090100P[72]	-	-	-	-
23-123552-004[266]	2-19/32 "	R42R55314	R42R55314[37]	R40107771	R4090100P[72]	-	-	-	-
23-123572-004[271]	3-3/8 "	R42R55099	R42R55098[37]	R4066780	R4090021[201]	-	-	-	-
23-123572-004[271]	2-7/8 "	R42R55250	R42R55250[37]	R4066365	R4090096[72]	-	-	-	-
23-123552-004[266]	2-19/32 "	R42R55314	R42R55314[37]	R40107771	R4090100P[72]	-	-	-	-
23-123572-004[271]	2-19/32 "	R42R55314	R42R55314[37]	R40107771	R4090100P[72]	-	-	-	-
23-123552-004[266]	2-7/8 "	R42R55250	R42R55250[37]	R4066365	R4090096[72]	-	-	-	-
R44141476[268]	2-19/32 "	R42R55314	R42R55314[37]	R40107771	R4090100P[72]	-	-	-	-
R44141476[268]	3-3/8 "	R42R55099	R42R55098[37]	R4066780	R4090021[201]	-	-	-	-
R44141476[268]	2-7/8 "	R42R55250	R42R55250[37]	R4066365	R4090096[72]	-	-	-	-
23-123572-004[271]	2-19/32 "	R42R55314	R42R55314[37]	R40107771	R4090100P[72]	-	-	-	-
23-123552-004[266]	2-7/8 "	R42R55250	R42R55250[37]	R4066365	R4090096[72]	-	-	-	-
R44141608[267]	2-19/32 "	R42R55314	R42R55314[37]	R40107771	R4090100P[72]	-	-	-	-
23-123572-004[271]	3-3/8 "	R42R55099	R42R55098[37]	R4066780	R4090021[201]	-	-	-	-
R44141608[267]	2-7/8 "	R42R55250	R42R55250[37]	R4066365	R4090096[72]	-	-	-	-
23-123552-004[266]	2-19/32 "	R42R55314	R42R55314[37]	R40107771	R4090100P[72]	-	-	-	-
23-123552-004[266]	3-3/8 "	R42R55099	R42R55098[37]	R4066780	R4090021[201]	-	-	-	-
23-123572-004[271]	2-7/8 "	R42R55250	R42R55250[37]	R4066365	R4090096[72]	-	-	-	-
23-123572-004[271]	2-7/8 "	R42R55250	R42R55250[37]	R4066365	R4090096[72]	-	-	-	-
23-123572-004[271]	2-19/32 "	R42R55314	R42R55314[37]	R40107771	R4090100P[72]	-	-	-	-
23-123552-004[266]	2-19/32 "	R42R55314	R42R55314[37]	R40107771	R4090100P[72]	-	-	-	-
23-123552-004[266]	2-7/8 "	R42R55250	R42R55250[37]	R4066365	R4090096[72]	-	-	-	-
23-123572-004[271]	2-19/32 "	R42R55314	R42R55314[37]	R40107771	R4090100P[72]	-	-	-	-
R44141476[268]	2-7/8 "	R42R55250	R42R55250[37]	R4066365	R4090096[72]	-	-	-	-
23-123552-004[266]	2-7/8 "	R42R55250	R42R55250[37]	R4066365	R4090096[72]	-	-	-	-
R44141476[268]	2-19/32 "	R42R55314	R42R55314[37]	R40107771	R4090100P[72]	-	-	-	-
R44141608[267]	2-19/32 "	R42R55314	R42R55314[37]	R40107771	R4090100P[72]	-	-	-	-
23-123572-004[271]	2-7/8 "	R42R55250	R42R55250[37]	R4066365	R4090096[72]	-	-	-	-
23-123572-004[271]	3-3/8 "	R42R55099	R42R55098[37]	R4066780	R4090021[201]	-	-	-	-
23-123552-004[266]	3-3/8 "	R42R55099	R42R55098[37]	R4066780	R4090021[201]	-	-	-	-
23-123552-004[266]	2-19/32 "	R42R55314	R42R55314[37]	R40107771	R4090100P[72]	-	-	-	-
R44141476[268]	3-3/8 "	R42R55099	R42R55098[37]	R4066780	R4090021[201]	-	-	-	-
R44141608[267]	2-7/8 "	R42R55250	R42R55250[37]	R4066365	R4090096[72]	-	-	-	-
23-123572-004[271]	2-7/8 "	R42R55250	R42R55250[37]	R4066365	R4090096[72]	-	-	-	-
23-123552-004[266]	2-7/8 "	R42R55250	R42R55250[37]	R4066365	R4090096[72]	-	-	-	-
23-123552-004[266]	2-19/32 "	R42R55314	R42R55314[37]	R40107771	R4090100P[72]	-	-	-	-
23-123572-004[271]	2-19/32 "	R42R55314	R42R55314[37]	R40107771	R4090100P[72]	-	-	-	-
R44141476[268]	2-19/32 "	R42R55314	R42R55314[37]	R40107771	R4090100P[72]	-	-	-	-
23-123552-004[266]	2-7/8 "	R42R55250	R42R55250[37]	R4066365	R4090096[72]	-	-	-	-
R44141476[268]	3-3/8 "	R42R55099	R42R55098[37]	R4066780	R4090021[201]	-	-	-	-
23-123572-004[271]	3-3/8 "	R42R55099	R42R55098[37]	R4066780	R4090021[201]	-	-	-	-
23-123572-004[271]	2-19/32 "	R42R55314	R42R55314[37]	R40107771	R4090100P[72]	-	-	-	-
23-123572-004[271]	2-7/8 "	R42R55250	R42R55250[37]	R4066365	R4090096[72]	-	-	-	-
R44141608[267]	2-7/8 "	R42R55250	R42R55250[37]	R4066365	R4090096[72]	-	-	-	-
R44141476[268]	2-7/8 "	R42R55250	R42R55250[37]	R4066365	R4090096[72]	-	-	-	-
R44141608[267]	2-19/32 "	R42R55314	R42R55314[37]	R40107771	R4090100P[72]	-	-	-	-
23-123552-004[266]	2-19/32 "	R42R55314	R42R55314[37]	R40107771	R4090100P[72]	-	-	-	-
23-123552-004[266]	3-3/8 "	R42R55099	R42R55098[37]	R4066780	R4090021[201]	-	-	-	-
23-123572-004[271]	2-7/8 "	R42R55250	R42R55250[37]	R4066365	R4090096[72]	-	-	-	-
23-123572-004[271]	2-19/32 "	R42R55314	R42R55314[37]	R40107771	R4090100P[72]	-	-	-	-
23-123552-004[266]	2-7/8 "	R42R55250	R42R55250[37]	R4066365	R4090096[72]	-	-	-	-
23-123552-004[266]	2-19/32 "	R42R55314	R42R55314[37]	R40107771	R4090100P[72]	-	-	-	-
23-123552-004[266]	2-7/8 "	R42R55250	R42R55250[37]	R4066365	R4090096[72]	-	-	-	-

MAKE MODEL YEAR AXLE CODE AXLE WEIGHT	AXLE & BRK. TYPE	BRK. MFG.	BRAKE SIZE	FMSI	MERITOR DISC PAD OR BRAKE SHOE	MERITOR GUIDE PIN OR RETURN SPRING KIT	MERITOR CALIPER HWD. KIT OR RETURN SPRING KIT	MERITOR ADJUSTER KIT (LEFT WHEEL)	MERITOR ADJUSTER KIT (RIGHT WHEEL)
ITE(Cont.)									
3000, 3400, 3600, 3800, 3900 SERIES: SCHOOL BUS(Cont.)									
1990									
	Fd	BX		7108 - D184	MD184	R40H5010	R40H5519	NR	NR
	Fd	BX		7108 - D184	MD184	R40H5010	R40H5519	NR	NR
	Fd	BX		7108 - D184	MD184	R40H5010	R40H5519	NR	NR
	Fd	BX		7142 - D225	MD225	R40H5010	R40H5522	NR	NR
	Fd	BX		7108 - D184	MD184	R40H5010	R40H5519	NR	NR
	Fd	BX		7108 - D184	MD184	R40H5010	R40H5519	NR	NR
	Fd	BX		7108 - D184	MD184	R40H5010	R40H5519	NR	NR
	Fd	BX		7108 - D184	MD184	R40H5010	R40H5519	NR	NR
	Fd	BX		7142 - D225	MD225	R40H5010	R40H5522	NR	NR
	Fd	BX		7142 - D225	MD225	R40H5010	R40H5522	NR	NR
	Rd	BX		7142 - D225	MD225	R40H5010	R40H5522	NR	NR
	Rd	BX		7108 - D184	MD184	R40H5010	R40H5519	NR	NR
	Rd	BX		7142 - D225	MD225	R40H5010	R40H5522	NR	NR
	Rd	BX		7108 - D184	MD184	R40H5010	R40H5519	NR	NR
400 SERIES: LFE MEDIUM DUTY									
1994 Air Over Hydraulic Brakes	Fa		320mm x 110mm	1410 - S602	R467406	R409841	R409842	N/A	N/A
	Ra		320mm x 130mm	1434 - S632	R469824	R409845	R409846	N/A	N/A
1993	Fa		320mm x 110mm	1410 - S602	R467406	R409841	R409842	N/A	N/A
	Ra		320mm x 130mm	1434 - S632	R469824	R409845	R409846	N/A	N/A
1992	Fa		320mm x 110mm	1410 - S602	R467406	R409841	R409842	N/A	N/A
	Ra		320mm x 130mm	1434 - S632	R469824	R409845	R409846	N/A	N/A
1991	Fa		320mm x 110mm	1410 - S602	R467406	R409841	R409842	N/A	N/A
	Ra		320mm x 130mm	1434 - S632	R469824	R409845	R409846	N/A	N/A
1990	Fa		320mm x 110mm	1410 - S602	R467406	R409841	R409842	N/A	N/A
	Ra		320mm x 130mm	1434 - S632	R469824	R409845	R409846	N/A	N/A
1989	Fa		320mm x 110mm	1410 - S602	R467406	R409841	R409842	N/A	N/A
	Ra		320mm x 130mm	1434 - S632	R469824	R409845	R409846	N/A	N/A
1988	Fa		320mm x 110mm	1410 - S602	R467406	R409841	R409842	N/A	N/A
	Ra		320mm x 130mm	1434 - S632	R469824	R409845	R409846	N/A	N/A
1987	Fa		320mm x 110mm	1410 - S602	R467406	R409841	R409842	N/A	N/A
	Ra		320mm x 130mm	1434 - S632	R469824	R409845	R409846	N/A	N/A
1986	Fa		320mm x 110mm	1410 - S602	R467406	R409841	R409842	N/A	N/A
	Ra		320mm x 130mm	1434 - S632	R469824	R409845	R409846	N/A	N/A
4000 SERIES: MEDIUM CONVENTIONALS									
1999									
	Fd	BX		7142 - D225	MD225	R40H5010	R40H5522	NR	NR
	Fd	BX		7142 - D225	MD225	R40H5010	R40H5522	NR	NR
	Fd	BX		7108 - D184	MD184	R40H5010	R40H5519	NR	NR
	Fd	BX		7108 - D184	MD184	R40H5010	R40H5519	NR	NR
	Fd	BX		7108 - D184	MD184	R40H5010	R40H5519	NR	NR
	Fd	BX		7108 - D184	MD184	R40H5010	R40H5519	NR	NR
	Fd	BX		7142 - D225	MD225	R40H5010	R40H5522	NR	NR
	Fd	BX		7108 - D184	MD184	R40H5010	R40H5519	NR	NR
	Fd	BX		7108 - D184	MD184	R40H5010	R40H5519	NR	NR
	Fd	BX		7108 - D184	MD184	R40H5010	R40H5519	NR	NR
	Fd	BX		7108 - D184	MD184	R40H5010	R40H5519	NR	NR
	Fd	BX		7142 - D225	MD225	R40H5010	R40H5522	NR	NR
	Rd	BX		7142 - D225	MD225	R40H5010	R40H5522	NR	NR
	Rd	BX		7108 - D184	MD184	R40H5010	R40H5519	NR	NR
	Rd	BX		7142 - D225	MD225	R40H5010	R40H5522	NR	NR
	Rd	BX		7108 - D184	MD184	R40H5010	R40H5519	NR	NR
	Rd	BX		7108 - D184	MD184	R40H5010	R40H5519	NR	NR
	Rd	BX		7142 - D225	MD225	R40H5010	R40H5522	NR	NR

37 - Also available as a New unit
266 - 10 Stud, Hat Shaped
270 - 5 Stud, U Shape, .766 Dia. Studs
72 - Phenolic/Steel Face
267 - 10 Stud, U Shaped
271 - 6 Stud, Hat Shape
201 - Steel Piston
268 - 5 Stud, Hat Shape

MERITOR DRUM OR ROTOR NO.	CALIPER OR CYLINDER BORE SIZE	MERITOR CALIPER OR WHEEL CYLINDER (LEFT)	MERITOR CALIPER OR WHEEL CYLINDER (RIGHT)	MERITOR CALIPER OR WHEEL CYLINDER REPAIR KIT	MERITOR CALIPER PISTON	MERITOR MASTER CYLINDER	MERITOR MASTER CYLINDER KIT	MERITOR BRAKE HOSE (LEFT)	MERITOR BRAKE HOSE (RIGHT)
									ITE(Cont.)
3000, 3400, 3600, 3800, 3900 SERIES: SCHOOL BUS(Cont.)									
R44141476[268]	2-19/32 "	R42R55314	R42R55314[37]	R40107771	R4090100P[72]	-	-	-	-
R44141476[268]	3-3/8 "	R42R55099	R42R55098[37]	R4066780	R4090021[201]	-	-	-	-
23-123572-004[271]	2-19/32 "	R42R55314	R42R55314[37]	R40107771	R4090100P[72]	-	-	-	-
R44141608[267]	2-7/8 "	R42R55250	R42R55250[37]	R4066365	R4090096[72]	-	-	-	-
23-123552-004[266]	3-3/8 "	R42R55099	R42R55098[37]	R4066780	R4090021[201]	-	-	-	-
23-123552-004[266]	2-19/32 "	R42R55314	R42R55314[37]	R40107771	R4090100P[72]	-	-	-	-
23-123572-004[271]	3-3/8 "	R42R55099	R42R55098[37]	R4066780	R4090021[201]	-	-	-	-
R44141608[267]	2-19/32 "	R42R55314	R42R55314[37]	R40107771	R4090100P[72]	-	-	-	-
R44141476[268]	2-7/8 "	R42R55250	R42R55250[37]	R4066365	R4090096[72]	-	-	-	-
23-123572-004[271]	2-7/8 "	R42R55250	R42R55250[37]	R4066365	R4090096[72]	-	-	-	-
23-123572-004[271]	2-7/8 "	R42R55250	R42R55250[37]	R4066365	R4090096[72]	-	-	-	-
23-123552-004[266]	2-19/32 "	R42R55314	R42R55314[37]	R40107771	R4090100P[72]	-	-	-	-
23-123552-004[266]	2-7/8 "	R42R55250	R42R55250[37]	R4066365	R4090096[72]	-	-	-	-
23-123572-004[271]	2-19/32 "	R42R55314	R42R55314[37]	R40107771	R4090100P[72]	-	-	-	-
400 SERIES: LFE MEDIUM DUTY									
N/A	1-3/8 "	-	-	N/A	NR	-	-	R451651	R451651
N/A	1.4375	-	-	N/A	NR	-	-	R451652	R451652
N/A	1-3/8 "	-	-	N/A	NR	-	-	R451651	R451651
N/A	1.4375	-	-	N/A	NR	-	-	R451652	R451652
N/A	1-3/8 "	-	-	N/A	NR	-	-	R451651	R451651
N/A	1.4375	-	-	N/A	NR	-	-	R451652	R451652
N/A	1-3/8 "	-	-	N/A	NR	-	-	R451651	R451651
N/A	1.4375	-	-	N/A	NR	-	-	R451652	R451652
N/A	1-3/8 "	-	-	N/A	NR	-	-	R451651	R451651
N/A	1.4375	-	-	N/A	NR	-	-	R451652	R451652
N/A	1-3/8 "	-	-	N/A	NR	-	-	R451651	R451651
N/A	1.4375	-	-	N/A	NR	-	-	R451652	R451652
N/A	1-3/8 "	-	-	N/A	NR	-	-	R451651	R451651
N/A	1.4375	-	-	N/A	NR	-	-	R451652	R451652
N/A	1-3/8 "	-	-	N/A	NR	-	-	R451651	R451651
N/A	1.4375	-	-	N/A	NR	-	-	R451652	R451652
4000 SERIES: MEDIUM CONVENTIONALS									
23-123572-004[271]	2-7/8 "	R42R55250	R42R55250[37]	R4066365	R4090096[72]	-	-	-	-
23-123552-004[266]	2-7/8 "	R42R55250	R42R55250[37]	R4066365	R4090096[72]	-	-	-	-
23-123552-004[266]	3-3/8 "	R42R55099	R42R55098[37]	R4066780	R4090021[201]	-	-	-	-
R44141476[268]	2-19/32 "	R42R55314	R42R55314[37]	R40107771	R4090100P[72]	-	-	-	-
R44141476[268]	3-3/8 "	R42R55099	R42R55098[37]	R4066780	R4090021[201]	-	-	-	-
R44141608[267]	3-3/8 "	R42R55099	R42R55098[37]	R4066780	R4090021[201]	-	-	-	-
R44141476[268]	2-7/8 "	R42R55250	R42R55250[37]	R4066365	R4090096[72]	-	-	-	-
R44141608[267]	2-19/32 "	R42R55314	R42R55314[37]	R40107771	R4090100P[72]	-	-	-	-
23-123572-004[271]	2-19/32 "	R42R55314	R42R55314[37]	R40107771	R4090100P[72]	-	-	-	-
23-123552-004[266]	2-19/32 "	R42R55314	R42R55314[37]	R40107771	R4090100P[72]	-	-	-	-
23-123572-004[271]	3-3/8 "	R42R55099	R42R55098[37]	R4066780	R4090021[201]	-	-	-	-
R44141608[267]	2-7/8 "	R42R55250	R42R55250[37]	R4066365	R4090096[72]	-	-	-	-
23-123572-004[271]	2-7/8 "	R42R55250	R42R55250[37]	R4066365	R4090096[72]	-	-	R4577512	R4577512
23-123552-004[266]	2-19/32 "	R42R55314	R42R55314[37]	R40107771	R4090100P[72]	-	-	R4577512	R4577512
23-123552-004[266]	2-7/8 "	R42R55250	R42R55250[37]	R4066365	R4090096[72]	-	-	R4577512	R4577512
23-123572-004[271]	2-19/32 "	R42R55314	R42R55314[37]	R40107771	R4090100P[72]	-	-	R4577512	R4577512
R44141627[270]	2-19/32 "	R42R55314	R42R55314[37]	R40107771	R4090100P[72]	-	-	R4577512	R4577512
R44141627[270]	2-7/8 "	R42R55250	R42R55250[37]	R4066365	R4090096[72]	-	-	R4577512	R4577512

MAKE MODEL YEAR AXLE CODE AXLE WEIGHT	AXLE & BRK. TYPE	BRK. MFG.	BRAKE SIZE	FMSI	MERITOR DISC PAD OR BRAKE SHOE	MERITOR GUIDE PIN OR RETURN SPRING KIT	MERITOR CALIPER HWD. KIT OR RETURN SPRING KIT	MERITOR ADJUSTER KIT (LEFT WHEEL)	MERITOR ADJUSTER KIT (RIGHT WHEEL)
ITE(Cont.)									
4000 SERIES: MEDIUM CONVENTIONALS(Cont.)									
1998									
	Fd	BX		7142 - D225	MD225	R40H5010	R40H5522	NR	NR
	Fd	BX		7108 - D184	MD184	R40H5010	R40H5519	NR	NR
	Fd	BX		7108 - D184	MD184	R40H5010	R40H5519	NR	NR
	Fd	BX		7142 - D225	MD225	R40H5010	R40H5522	NR	NR
	Fd	BX		7142 - D225	MD225	R40H5010	R40H5522	NR	NR
	Fd	BX		7108 - D184	MD184	R40H5010	R40H5519	NR	NR
	Fd	BX		7108 - D184	MD184	R40H5010	R40H5519	NR	NR
	Fd	BX		7108 - D184	MD184	R40H5010	R40H5519	NR	NR
	Fd	BX		7142 - D225	MD225	R40H5010	R40H5522	NR	NR
	Fd	BX		7108 - D184	MD184	R40H5010	R40H5519	NR	NR
	Fd	BX		7108 - D184	MD184	R40H5010	R40H5519	NR	NR
	Fd	BX		7108 - D184	MD184	R40H5010	R40H5519	NR	NR
	Rd	BX		7108 - D184	MD184	R40H5010	R40H5519	NR	NR
	Rd	BX		7142 - D225	MD225	R40H5010	R40H5522	NR	NR
	Rd	BX		7142 - D225	MD225	R40H5010	R40H5522	NR	NR
	Rd	BX		7108 - D184	MD184	R40H5010	R40H5519	NR	NR
	Rd	BX		7142 - D225	MD225	R40H5010	R40H5522	NR	NR
	Rd	BX		7108 - D184	MD184	R40H5010	R40H5519	NR	NR
1997									
	Fd	BX		7108 - D184	MD184	R40H5010	R40H5519	NR	NR
	Fd	BX		7108 - D184	MD184	R40H5010	R40H5519	NR	NR
	Fd	BX		7108 - D184	MD184	R40H5010	R40H5519	NR	NR
	Fd	BX		7108 - D184	MD184	R40H5010	R40H5519	NR	NR
	Fd	BX		7142 - D225	MD225	R40H5010	R40H5522	NR	NR
	Fd	BX		7108 - D184	MD184	R40H5010	R40H5519	NR	NR
	Fd	BX		7108 - D184	MD184	R40H5010	R40H5519	NR	NR
	Fd	BX		7108 - D184	MD184	R40H5010	R40H5519	NR	NR
	Fd	BX		7142 - D225	MD225	R40H5010	R40H5522	NR	NR
	Fd	BX		7108 - D184	MD184	R40H5010	R40H5519	NR	NR
	Fd	BX		7142 - D225	MD225	R40H5010	R40H5522	NR	NR
	Fd	BX		7142 - D225	MD225	R40H5010	R40H5522	NR	NR
	Rd	BX		7142 - D225	MD225	R40H5010	R40H5522	NR	NR
	Rd	BX		7108 - D184	MD184	R40H5010	R40H5519	NR	NR
	Rd	BX		7108 - D184	MD184	R40H5010	R40H5519	NR	NR
	Rd	BX		7108 - D184	MD184	R40H5010	R40H5519	NR	NR
	Rd	BX		7142 - D225	MD225	R40H5010	R40H5522	NR	NR
	Rd	BX		7142 - D225	MD225	R40H5010	R40H5522	NR	NR
1996									
	Fd	BX		7108 - D184	MD184	R40H5010	R40H5519	NR	NR
	Fd	BX		7142 - D225	MD225	R40H5010	R40H5522	NR	NR
	Fd	BX		7108 - D184	MD184	R40H5010	R40H5519	NR	NR
	Fd	BX		7142 - D225	MD225	R40H5010	R40H5522	NR	NR
	Fd	BX		7108 - D184	MD184	R40H5010	R40H5519	NR	NR
	Fd	BX		7142 - D225	MD225	R40H5010	R40H5522	NR	NR
	Fd	BX		7108 - D184	MD184	R40H5010	R40H5519	NR	NR
	Fd	BX		7108 - D184	MD184	R40H5010	R40H5519	NR	NR
	Fd	BX		7108 - D184	MD184	R40H5010	R40H5519	NR	NR
	Fd	BX		7142 - D225	MD225	R40H5010	R40H5522	NR	NR
	Fd	BX		7108 - D184	MD184	R40H5010	R40H5519	NR	NR
	Fd	BX		7108 - D184	MD184	R40H5010	R40H5519	NR	NR
	Rd	BX		7142 - D225	MD225	R40H5010	R40H5522	NR	NR
	Rd	BX		7142 - D225	MD225	R40H5010	R40H5522	NR	NR
	Rd	BX		7108 - D184	MD184	R40H5010	R40H5519	NR	NR
	Rd	BX		7108 - D184	MD184	R40H5010	R40H5519	NR	NR
	Rd	BX		7142 - D225	MD225	R40H5010	R40H5522	NR	NR
	Rd	BX		7108 - D184	MD184	R40H5010	R40H5519	NR	NR
1995									
	Fd	BX		7108 - D184	MD184	R40H5010	R40H5519	NR	NR
	Fd	BX		7142 - D225	MD225	R40H5010	R40H5522	NR	NR
	Fd	BX		7108 - D184	MD184	R40H5010	R40H5519	NR	NR
	Fd	BX		7108 - D184	MD184	R40H5010	R40H5519	NR	NR
	Fd	BX		7108 - D184	MD184	R40H5010	R40H5519	NR	NR
	Fd	BX		7108 - D184	MD184	R40H5010	R40H5519	NR	NR
	Fd	BX		7142 - D225	MD225	R40H5010	R40H5522	NR	NR

37 - Also available as a New unit
266 - 10 Stud, Hat Shaped
270 - 5 Stud, U Shape, .766 Dia. Studs
72 - Phenolic/Steel Face
267 - 10 Stud, U Shaped
271 - 6 Stud, Hat Shape
201 - Steel Piston
268 - 5 Stud, Hat Shape

MERITOR DRUM OR ROTOR NO.	CALIPER OR CYLINDER BORE SIZE	MERITOR CALIPER OR WHEEL CYLINDER (LEFT)	MERITOR CALIPER OR WHEEL CYLINDER (RIGHT)	MERITOR CALIPER OR WHEEL CYLINDER REPAIR KIT	MERITOR CALIPER PISTON	MERITOR MASTER CYLINDER	MERITOR MASTER CYLINDER KIT	MERITOR BRAKE HOSE (LEFT)	MERITOR BRAKE HOSE (RIGHT)
									ITE(Cont.)
									4000 SERIES: MEDIUM CONVENTIONALS(Cont.)
R44141476[268]	2-7/8 "	R42R55250	R42R55250[37]	R4066365	R4090096[72]	-	-	-	-
23-123572-004[271]	3-3/8 "	R42R55099	R42R55098[37]	R4066780	R4090021[201]	-	-	-	-
R44141608[267]	3-3/8 "	R42R55099	R42R55098[37]	R4066780	R4090021[201]	-	-	-	-
23-123572-004[271]	2-7/8 "	R42R55250	R42R55250[37]	R4066365	R4090096[72]	-	-	-	-
R44141608[267]	2-7/8 "	R42R55250	R42R55250[37]	R4066365	R4090096[72]	-	-	-	-
23-123572-004[271]	2-19/32 "	R42R55314	R42R55314[37]	R40107771	R4090100P[72]	-	-	-	-
R44141476[268]	2-19/32 "	R42R55314	R42R55314[37]	R40107771	R4090100P[72]	-	-	-	-
23-123552-004[266]	3-3/8 "	R42R55099	R42R55098[37]	R4066780	R4090021[201]	-	-	-	-
23-123552-004[266]	2-7/8 "	R42R55250	R42R55250[37]	R4066365	R4090096[72]	-	-	-	-
23-123552-004[266]	2-19/32 "	R42R55314	R42R55314[37]	R40107771	R4090100P[72]	-	-	-	-
R44141476[268]	3-3/8 "	R42R55099	R42R55098[37]	R4066780	R4090021[201]	-	-	-	-
R44141608[267]	2-19/32 "	R42R55314	R42R55314[37]	R40107771	R4090100P[72]	-	-	-	-
23-123552-004[266]	2-19/32 "	R42R55314	R42R55314[37]	R40107771	R4090100P[72]	-	-	R4577512	R4577512
23-123552-004[266]	2-7/8 "	R42R55250	R42R55250[37]	R4066365	R4090096[72]	-	-	R4577512	R4577512
R44141627[270]	2-7/8 "	R42R55250	R42R55250[37]	R4066365	R4090096[72]	-	-	R4577512	R4577512
R44141627[270]	2-19/32 "	R42R55314	R42R55314[37]	R40107771	R4090100P[72]	-	-	R4577512	R4577512
23-123572-004[271]	2-7/8 "	R42R55250	R42R55250[37]	R4066365	R4090096[72]	-	-	R4577512	R4577512
23-123572-004[271]	2-19/32 "	R42R55314	R42R55314[37]	R40107771	R4090100P[72]	-	-	R4577512	R4577512
R44141476[268]	2-19/32 "	R42R55314	R42R55314[37]	R40107771	R4090100P[72]	-	-	-	-
23-123572-004[271]	3-3/8 "	R42R55099	R42R55098[37]	R4066780	R4090021[201]	-	-	-	-
R44141476[268]	3-3/8 "	R42R55099	R42R55098[37]	R4066780	R4090021[201]	-	-	-	-
R44141608[267]	2-19/32 "	R42R55314	R42R55314[37]	R40107771	R4090100P[72]	-	-	-	-
23-123552-004[266]	2-7/8 "	R42R55250	R42R55250[37]	R4066365	R4090096[72]	-	-	-	-
23-123552-004[266]	2-19/32 "	R42R55314	R42R55314[37]	R40107771	R4090100P[72]	-	-	-	-
23-123552-004[266]	3-3/8 "	R42R55099	R42R55098[37]	R4066780	R4090021[201]	-	-	-	-
23-123572-004[271]	2-19/32 "	R42R55314	R42R55314[37]	R40107771	R4090100P[72]	-	-	-	-
R44141608[267]	2-7/8 "	R42R55250	R42R55250[37]	R4066365	R4090096[72]	-	-	-	-
R44141608[267]	3-3/8 "	R42R55099	R42R55098[37]	R4066780	R4090021[201]	-	-	-	-
23-123572-004[271]	2-7/8 "	R42R55250	R42R55250[37]	R4066365	R4090096[72]	-	-	-	-
R44141476[268]	2-7/8 "	R42R55250	R42R55250[37]	R4066365	R4090096[72]	-	-	-	-
23-123572-004[271]	2-7/8 "	R42R55250	R42R55250[37]	R4066365	R4090096[72]	-	-	R4577512	R4577512
R44141627[270]	2-19/32 "	R42R55314	R42R55314[37]	R40107771	R4090100P[72]	-	-	R4577512	R4577512
23-123572-004[271]	2-19/32 "	R42R55314	R42R55314[37]	R40107771	R4090100P[72]	-	-	R4577512	R4577512
23-123552-004[266]	2-19/32 "	R42R55314	R42R55314[37]	R40107771	R4090100P[72]	-	-	R4577512	R4577512
23-123552-004[266]	2-7/8 "	R42R55250	R42R55250[37]	R4066365	R4090096[72]	-	-	R4577512	R4577512
R44141627[270]	2-7/8 "	R42R55250	R42R55250[37]	R4066365	R4090096[72]	-	-	R4577512	R4577512
23-123572-004[271]	3-3/8 "	R42R55099	R42R55098[37]	R4066780	R4090021[201]	-	-	-	-
23-123572-004[271]	2-7/8 "	R42R55250	R42R55250[37]	R4066365	R4090096[72]	-	-	-	-
23-123552-004[266]	3-3/8 "	R42R55099	R42R55098[37]	R4066780	R4090021[201]	-	-	-	-
R44141608[267]	2-7/8 "	R42R55250	R42R55250[37]	R4066365	R4090096[72]	-	-	-	-
23-123552-004[266]	2-19/32 "	R42R55314	R42R55314[37]	R40107771	R4090100P[72]	-	-	-	-
23-123552-004[266]	2-7/8 "	R42R55250	R42R55250[37]	R4066365	R4090096[72]	-	-	-	-
R44141476[268]	3-3/8 "	R42R55099	R42R55098[37]	R4066780	R4090021[201]	-	-	-	-
R44141608[267]	3-3/8 "	R42R55099	R42R55098[37]	R4066780	R4090021[201]	-	-	-	-
R44141608[267]	2-19/32 "	R42R55314	R42R55314[37]	R40107771	R4090100P[72]	-	-	-	-
R44141476[268]	2-7/8 "	R42R55250	R42R55250[37]	R4066365	R4090096[72]	-	-	-	-
23-123572-004[271]	2-19/32 "	R42R55314	R42R55314[37]	R40107771	R4090100P[72]	-	-	-	-
R44141476[268]	2-19/32 "	R42R55314	R42R55314[37]	R40107771	R4090100P[72]	-	-	-	-
R44141627[270]	2-7/8 "	R42R55250	R42R55250[37]	R4066365	R4090096[72]	-	-	R4577512	R4577512
23-123552-004[266]	2-7/8 "	R42R55250	R42R55250[37]	R4066365	R4090096[72]	-	-	R4577512	R4577512
23-123552-004[266]	2-19/32 "	R42R55314	R42R55314[37]	R40107771	R4090100P[72]	-	-	R4577512	R4577512
23-123572-004[271]	2-19/32 "	R42R55314	R42R55314[37]	R40107771	R4090100P[72]	-	-	R4577512	R4577512
23-123572-004[271]	2-7/8 "	R42R55250	R42R55250[37]	R4066365	R4090096[72]	-	-	R4577512	R4577512
R44141627[270]	2-19/32 "	R42R55314	R42R55314[37]	R40107771	R4090100P[72]	-	-	R4577512	R4577512
23-123572-004[271]	2-19/32 "	R42R55314	R42R55314[37]	R40107771	R4090100P[72]	-	-	-	-
R44141476[268]	2-7/8 "	R42R55250	R42R55250[37]	R4066365	R4090096[72]	-	-	-	-
R44141476[268]	3-3/8 "	R42R55099	R42R55098[37]	R4066780	R4090021[201]	-	-	-	-
R44141608[267]	2-19/32 "	R42R55314	R42R55314[37]	R40107771	R4090100P[72]	-	-	-	-
23-123572-004[271]	3-3/8 "	R42R55099	R42R55098[37]	R4066780	R4090021[201]	-	-	-	-
R44141608[267]	3-3/8 "	R42R55099	R42R55098[37]	R4066780	R4090021[201]	-	-	-	-
23-123552-004[266]	2-7/8 "	R42R55250	R42R55250[37]	R4066365	R4090096[72]	-	-	-	-

MAKE MODEL YEAR AXLE CODE AXLE WEIGHT	AXLE & BRK. TYPE	BRK. MFG.	BRAKE SIZE	FMSI	MERITOR DISC PAD OR BRAKE SHOE	MERITOR GUIDE PIN OR RETURN SPRING KIT	MERITOR CALIPER HWD. KIT OR RETURN SPRING KIT	MERITOR ADJUSTER KIT (LEFT WHEEL)	MERITOR ADJUSTER KIT (RIGHT WHEEL)
ITE(Cont.)									
4000 SERIES: MEDIUM CONVENTIONALS(Cont.)									
1995									
	Fd	BX		7108 - D184	MD184	R40H5010	R40H5519	NR	NR
	Fd	BX		7108 - D184	MD184	R40H5010	R40H5519	NR	NR
	Fd	BX		7142 - D225	MD225	R40H5010	R40H5522	NR	NR
	Fd	BX		7108 - D184	MD184	R40H5010	R40H5519	NR	NR
	Fd	BX		7142 - D225	MD225	R40H5010	R40H5522	NR	NR
	Rd	BX		7142 - D225	MD225	R40H5010	R40H5522	NR	NR
	Rd	BX		7142 - D225	MD225	R40H5010	R40H5522	NR	NR
	Rd	BX		7108 - D184	MD184	R40H5010	R40H5519	NR	NR
	Rd	BX		7108 - D184	MD184	R40H5010	R40H5519	NR	NR
	Rd	BX		7142 - D225	MD225	R40H5010	R40H5522	NR	NR
	Rd	BX		7108 - D184	MD184	R40H5010	R40H5519	NR	NR
1994									
	Fd	BX		7108 - D184	MD184	R40H5010	R40H5519	NR	NR
	Fd	BX		7108 - D184	MD184	R40H5010	R40H5519	NR	NR
	Fd	BX		7142 - D225	MD225	R40H5010	R40H5522	NR	NR
	Fd	BX		7108 - D184	MD184	R40H5010	R40H5519	NR	NR
	Fd	BX		7142 - D225	MD225	R40H5010	R40H5522	NR	NR
	Fd	BX		7142 - D225	MD225	R40H5010	R40H5522	NR	NR
	Fd	BX		7142 - D225	MD225	R40H5010	R40H5522	NR	NR
	Fd	BX		7108 - D184	MD184	R40H5010	R40H5519	NR	NR
	Fd	BX		7108 - D184	MD184	R40H5010	R40H5519	NR	NR
	Fd	BX		7108 - D184	MD184	R40H5010	R40H5519	NR	NR
	Fd	BX		7108 - D184	MD184	R40H5010	R40H5519	NR	NR
	Fd	BX		7108 - D184	MD184	R40H5010	R40H5519	NR	NR
	Rd	BX		7142 - D225	MD225	R40H5010	R40H5522	NR	NR
	Rd	BX		7108 - D184	MD184	R40H5010	R40H5519	NR	NR
	Rd	BX		7108 - D184	MD184	R40H5010	R40H5519	NR	NR
	Rd	BX		7142 - D225	MD225	R40H5010	R40H5522	NR	NR
	Rd	BX		7142 - D225	MD225	R40H5010	R40H5522	NR	NR
	Rd	BX		7108 - D184	MD184	R40H5010	R40H5519	NR	NR
1993									
	Fd	BX		7108 - D184	MD184	R40H5010	R40H5519	NR	NR
	Fd	BX		7142 - D225	MD225	R40H5010	R40H5522	NR	NR
	Fd	BX		7142 - D225	MD225	R40H5010	R40H5522	NR	NR
	Fd	BX		7108 - D184	MD184	R40H5010	R40H5519	NR	NR
	Fd	BX		7142 - D225	MD225	R40H5010	R40H5522	NR	NR
	Fd	BX		7108 - D184	MD184	R40H5010	R40H5519	NR	NR
	Fd	BX		7108 - D184	MD184	R40H5010	R40H5519	NR	NR
	Fd	BX		7108 - D184	MD184	R40H5010	R40H5519	NR	NR
	Fd	BX		7108 - D184	MD184	R40H5010	R40H5519	NR	NR
	Fd	BX		7108 - D184	MD184	R40H5010	R40H5519	NR	NR
	Fd	BX		7142 - D225	MD225	R40H5010	R40H5522	NR	NR
	Rd	BX		7108 - D184	MD184	R40H5010	R40H5519	NR	NR
	Rd	BX		7108 - D184	MD184	R40H5010	R40H5519	NR	NR
	Rd	BX		7142 - D225	MD225	R40H5010	R40H5522	NR	NR
	Rd	BX		7142 - D225	MD225	R40H5010	R40H5522	NR	NR
	Rd	BX		7108 - D184	MD184	R40H5010	R40H5519	NR	NR
	Rd	BX		7142 - D225	MD225	R40H5010	R40H5522	NR	NR
1992									
	Fd	BX		7108 - D184	MD184	R40H5010	R40H5519	NR	NR
	Fd	BX		7108 - D184	MD184	R40H5010	R40H5519	NR	NR
	Fd	BX		7108 - D184	MD184	R40H5010	R40H5519	NR	NR
	Fd	BX		7108 - D184	MD184	R40H5010	R40H5519	NR	NR
	Fd	BX		7142 - D225	MD225	R40H5010	R40H5522	NR	NR
	Fd	BX		7108 - D184	MD184	R40H5010	R40H5519	NR	NR
	Fd	BX		7142 - D225	MD225	R40H5010	R40H5522	NR	NR
	Fd	BX		7142 - D225	MD225	R40H5010	R40H5522	NR	NR
	Fd	BX		7108 - D184	MD184	R40H5010	R40H5519	NR	NR
	Fd	BX		7108 - D184	MD184	R40H5010	R40H5519	NR	NR
	Fd	BX		7108 - D184	MD184	R40H5010	R40H5519	NR	NR
	Fd	BX		7142 - D225	MD225	R40H5010	R40H5522	NR	NR
	Rd	BX		7142 - D225	MD225	R40H5010	R40H5522	NR	NR
	Rd	BX		7108 - D184	MD184	R40H5010	R40H5519	NR	NR

37 - Also available as a New unit
266 - 10 Stud, Hat Shaped
270 - 5 Stud, U Shape, .766 Dia. Studs
72 - Phenolic/Steel Face
267 - 10 Stud, U Shaped
271 - 6 Stud, Hat Shape
201 - Steel Piston
268 - 5 Stud, Hat Shape

MERITOR DRUM OR ROTOR NO.	CALIPER OR CYLINDER BORE SIZE	MERITOR CALIPER OR WHEEL CYLINDER (LEFT)	MERITOR CALIPER OR WHEEL CYLINDER (RIGHT)	MERITOR CALIPER OR WHEEL CYLINDER REPAIR KIT	MERITOR CALIPER PISTON	MERITOR MASTER CYLINDER	MERITOR MASTER CYLINDER KIT	MERITOR BRAKE HOSE (LEFT)	MERITOR BRAKE HOSE (RIGHT)
									ITE(Cont.)
									4000 SERIES: MEDIUM CONVENTIONALS(Cont.)
23-123552-004[266]	2-19/32 "	R42R55314	R42R55314[37]	R40107771	R4090100P[72]	-	-	-	-
R44141476[268]	2-19/32 "	R42R55314	R42R55314[37]	R40107771	R4090100P[72]	-	-	-	-
23-123572-004[271]	2-7/8 "	R42R55250	R42R55250[37]	R4066365	R4090096[72]	-	-	-	-
23-123552-004[266]	3-3/8 "	R42R55099	R42R55098[37]	R4066780	R4090021[201]	-	-	-	-
R44141608[267]	2-7/8 "	R42R55250	R42R55250[37]	R4066365	R4090096[72]	-	-	-	-
23-123572-004[271]	2-7/8 "	R42R55250	R42R55250[37]	R4066365	R4090096[72]	-	-	R4577512	R4577512
R44141627[270]	2-7/8 "	R42R55250	R42R55250[37]	R4066365	R4090096[72]	-	-	R4577512	R4577512
R44141627[270]	2-19/32 "	R42R55314	R42R55314[37]	R40107771	R4090100P[72]	-	-	R4577512	R4577512
23-123572-004[271]	2-19/32 "	R42R55314	R42R55314[37]	R40107771	R4090100P[72]	-	-	R4577512	R4577512
23-123552-004[266]	2-7/8 "	R42R55250	R42R55250[37]	R4066365	R4090096[72]	-	-	R4577512	R4577512
23-123552-004[266]	2-19/32 "	R42R55314	R42R55314[37]	R40107771	R4090100P[72]	-	-	R4577512	R4577512
23-123552-004[266]	3-3/8 "	R42R55099	R42R55098[37]	R4066780	R4090021[201]	-	-	-	-
R44141476[268]	2-19/32 "	R42R55314	R42R55314[37]	R40107771	R4090100P[72]	-	-	-	-
23-123572-004[271]	2-7/8 "	R42R55250	R42R55250[37]	R4066365	R4090096[72]	-	-	-	-
R44141476[268]	3-3/8 "	R42R55099	R42R55098[37]	R4066780	R4090021[201]	-	-	-	-
R44141476[268]	2-7/8 "	R42R55250	R42R55250[37]	R4066365	R4090096[72]	-	-	-	-
23-123552-004[266]	2-7/8 "	R42R55250	R42R55250[37]	R4066365	R4090096[72]	-	-	-	-
R44141608[267]	2-7/8 "	R42R55250	R42R55250[37]	R4066365	R4090096[72]	-	-	-	-
R44141608[267]	3-3/8 "	R42R55099	R42R55098[37]	R4066780	R4090021[201]	-	-	-	-
R44141608[267]	2-19/32 "	R42R55314	R42R55314[37]	R40107771	R4090100P[72]	-	-	-	-
23-123572-004[271]	2-19/32 "	R42R55314	R42R55314[37]	R40107771	R4090100P[72]	-	-	-	-
23-123572-004[271]	3-3/8 "	R42R55099	R42R55098[37]	R4066780	R4090021[201]	-	-	-	-
23-123552-004[266]	2-19/32 "	R42R55314	R42R55314[37]	R40107771	R4090100P[72]	-	-	-	-
23-123552-004[266]	2-7/8 "	R42R55250	R42R55250[37]	R4066365	R4090096[72]	-	-	R4577512	R4577512
23-123552-004[266]	2-19/32 "	R42R55314	R42R55314[37]	R40107771	R4090100P[72]	-	-	R4577512	R4577512
23-123572-004[271]	2-19/32 "	R42R55314	R42R55314[37]	R40107771	R4090100P[72]	-	-	R4577512	R4577512
23-123572-004[271]	2-7/8 "	R42R55250	R42R55250[37]	R4066365	R4090096[72]	-	-	R4577512	R4577512
R44141627[270]	2-7/8 "	R42R55250	R42R55250[37]	R4066365	R4090096[72]	-	-	R4577512	R4577512
R44141627[270]	2-19/32 "	R42R55314	R42R55314[37]	R40107771	R4090100P[72]	-	-	R4577512	R4577512
R44141608[267]	3-3/8 "	R42R55099	R42R55098[37]	R4066780	R4090021[201]	-	-	-	-
R44141608[267]	2-7/8 "	R42R55250	R42R55250[37]	R4066365	R4090096[72]	-	-	-	-
R44141476[268]	2-7/8 "	R42R55250	R42R55250[37]	R4066365	R4090096[72]	-	-	-	-
23-123552-004[266]	2-19/32 "	R42R55314	R42R55314[37]	R40107771	R4090100P[72]	-	-	-	-
23-123552-004[266]	2-7/8 "	R42R55250	R42R55250[37]	R4066365	R4090096[72]	-	-	-	-
R44141608[267]	2-19/32 "	R42R55314	R42R55314[37]	R40107771	R4090100P[72]	-	-	-	-
23-123572-004[271]	2-19/32 "	R42R55314	R42R55314[37]	R40107771	R4090100P[72]	-	-	-	-
23-123572-004[271]	3-3/8 "	R42R55099	R42R55098[37]	R4066780	R4090021[201]	-	-	-	-
R44141476[268]	3-3/8 "	R42R55099	R42R55098[37]	R4066780	R4090021[201]	-	-	-	-
R44141476[268]	2-19/32 "	R42R55314	R42R55314[37]	R40107771	R4090100P[72]	-	-	-	-
23-123552-004[266]	3-3/8 "	R42R55099	R42R55098[37]	R4066780	R4090021[201]	-	-	-	-
23-123572-004[271]	2-7/8 "	R42R55250	R42R55250[37]	R4066365	R4090096[72]	-	-	-	-
R44141627[270]	2-19/32 "	R42R55314	R42R55314[37]	R40107771	R4090100P[72]	-	-	R4577512	R4577512
23-123572-004[271]	2-19/32 "	R42R55314	R42R55314[37]	R40107771	R4090100P[72]	-	-	R4577512	R4577512
23-123572-004[271]	2-7/8 "	R42R55250	R42R55250[37]	R4066365	R4090096[72]	-	-	R4577512	R4577512
R44141627[270]	2-7/8 "	R42R55250	R42R55250[37]	R4066365	R4090096[72]	-	-	R4577512	R4577512
23-123552-004[266]	2-19/32 "	R42R55314	R42R55314[37]	R40107771	R4090100P[72]	-	-	R4577512	R4577512
23-123552-004[266]	2-7/8 "	R42R55250	R42R55250[37]	R4066365	R4090096[72]	-	-	R4577512	R4577512
23-123572-004[271]	3-3/8 "	R42R55099	R42R55098[37]	R4066780	R4090021[201]	-	-	-	-
R44141476[268]	3-3/8 "	R42R55099	R42R55098[37]	R4066780	R4090021[201]	-	-	-	-
23-123552-004[266]	3-3/8 "	R42R55099	R42R55098[37]	R4066780	R4090021[201]	-	-	-	-
23-123552-004[266]	2-19/32 "	R42R55314	R42R55314[37]	R40107771	R4090100P[72]	-	-	-	-
23-123572-004[271]	2-7/8 "	R42R55250	R42R55250[37]	R4066365	R4090096[72]	-	-	-	-
R44141608[267]	3-3/8 "	R42R55099	R42R55098[37]	R4066780	R4090021[201]	-	-	-	-
R44141476[268]	2-7/8 "	R42R55250	R42R55250[37]	R4066365	R4090096[72]	-	-	-	-
R44141608[267]	2-7/8 "	R42R55250	R42R55250[37]	R4066365	R4090096[72]	-	-	-	-
23-123572-004[271]	2-19/32 "	R42R55314	R42R55314[37]	R40107771	R4090100P[72]	-	-	-	-
R44141608[267]	2-19/32 "	R42R55314	R42R55314[37]	R40107771	R4090100P[72]	-	-	-	-
R44141476[268]	2-19/32 "	R42R55314	R42R55314[37]	R40107771	R4090100P[72]	-	-	-	-
23-123552-004[266]	2-7/8 "	R42R55250	R42R55250[37]	R4066365	R4090096[72]	-	-	-	-
23-123552-004[266]	2-7/8 "	R42R55250	R42R55250[37]	R4066365	R4090096[72]	-	-	R4577512	R4577512
23-123572-004[271]	2-19/32 "	R42R55314	R42R55314[37]	R40107771	R4090100P[72]	-	-	R4577512	R4577512

MAKE MODEL YEAR AXLE CODE AXLE WEIGHT	AXLE & BRK. TYPE	BRK. MFG.	BRAKE SIZE	FMSI	MERITOR DISC PAD OR BRAKE SHOE	MERITOR GUIDE PIN OR RETURN SPRING KIT	MERITOR CALIPER HWD. KIT OR RETURN SPRING KIT	MERITOR ADJUSTER KIT (LEFT WHEEL)	MERITOR ADJUSTER KIT (RIGHT WHEEL)
ITE(Cont.)									
4000 SERIES: MEDIUM CONVENTIONALS(Cont.)									
1992									
	Rd	BX		7142 - D225	MD225	R40H5010	R40H5522	NR	NR
	Rd	BX		7142 - D225	MD225	R40H5010	R40H5522	NR	NR
	Rd	BX		7108 - D184	MD184	R40H5010	R40H5519	NR	NR
	Rd	BX		7108 - D184	MD184	R40H5010	R40H5519	NR	NR
1991									
	Fd	BX		7142 - D225	MD225	R40H5010	R40H5522	NR	NR
	Fd	BX		7108 - D184	MD184	R40H5010	R40H5519	NR	NR
	Fd	BX		7142 - D225	MD225	R40H5010	R40H5522	NR	NR
	Fd	BX		7108 - D184	MD184	R40H5010	R40H5519	NR	NR
	Fd	BX		7108 - D184	MD184	R40H5010	R40H5519	NR	NR
	Fd	BX		7108 - D184	MD184	R40H5010	R40H5519	NR	NR
	Fd	BX		7108 - D184	MD184	R40H5010	R40H5519	NR	NR
	Fd	BX		7142 - D225	MD225	R40H5010	R40H5522	NR	NR
	Fd	BX		7108 - D184	MD184	R40H5010	R40H5519	NR	NR
	Fd	BX		7108 - D184	MD184	R40H5010	R40H5519	NR	NR
	Fd	BX		7142 - D225	MD225	R40H5010	R40H5522	NR	NR
	Fd	BX		7108 - D184	MD184	R40H5010	R40H5519	NR	NR
	Rd	BX		7108 - D184	MD184	R40H5010	R40H5519	NR	NR
	Rd	BX		7108 - D184	MD184	R40H5010	R40H5519	NR	NR
	Rd	BX		7142 - D225	MD225	R40H5010	R40H5522	NR	NR
	Rd	BX		7142 - D225	MD225	R40H5010	R40H5522	NR	NR
	Rd	BX		7108 - D184	MD184	R40H5010	R40H5519	NR	NR
	Rd	BX		7142 - D225	MD225	R40H5010	R40H5522	NR	NR
1990									
	Fd	BX		7142 - D225	MD225	R40H5010	R40H5522	NR	NR
	Fd	BX		7108 - D184	MD184	R40H5010	R40H5519	NR	NR
	Fd	BX		7108 - D184	MD184	R40H5010	R40H5519	NR	NR
	Fd	BX		7142 - D225	MD225	R40H5010	R40H5522	NR	NR
	Fd	BX		7108 - D184	MD184	R40H5010	R40H5519	NR	NR
	Fd	BX		7108 - D184	MD184	R40H5010	R40H5519	NR	NR
	Fd	BX		7142 - D225	MD225	R40H5010	R40H5522	NR	NR
	Fd	BX		7108 - D184	MD184	R40H5010	R40H5519	NR	NR
	Fd	BX		7108 - D184	MD184	R40H5010	R40H5519	NR	NR
	Fd	BX		7142 - D225	MD225	R40H5010	R40H5522	NR	NR
	Fd	BX		7108 - D184	MD184	R40H5010	R40H5519	NR	NR
	Fd	BX		7108 - D184	MD184	R40H5010	R40H5519	NR	NR
	Rd	BX		7142 - D225	MD225	R40H5010	R40H5522	NR	NR
	Rd	BX		7108 - D184	MD184	R40H5010	R40H5519	NR	NR
	Rd	BX		7142 - D225	MD225	R40H5010	R40H5522	NR	NR
	Rd	BX		7108 - D184	MD184	R40H5010	R40H5519	NR	NR
	Rd	BX		7142 - D225	MD225	R40H5010	R40H5522	NR	NR
	Rd	BX		7108 - D184	MD184	R40H5010	R40H5519	NR	NR
4200, 4300, 4400, 4600, 4700, 4900 SERIES: MEDIUM CONVENTIONALS									
2008 Through April Spicer D800-F 8,000 lb	Fd	Bosch		7654 - D786	MD786A	R4011754	NR	NR	NR
Through April I-100S 10,000 lb	Fd	Bosch		7654 - D786	MD786A	R4011754	NR	NR	NR
Through April I-120S 11,000 lb	Fd	Bosch		7654 - D786	MD786A	R4011754	NR	NR	NR
Through April I-120SG 12,000 lb	Fd	Bosch		7654 - D786	MD786A	R4011754	NR	NR	NR
	Fd	Bosch		7655 - D786	MD786	R4011754	NR	NR	NR
Through April S122-S 12,200 lb	Rd	Bosch		7654 - D786	MD786A	R4011754	NR	NR	NR
Through April S135-S 13,500 lb	Rd	Bosch		7654 - D786	MD786A	R4011754	NR	NR	NR
Through April I-140S 14,000 lb	Fd	Bosch		7655 - D786	MD786	R4011754	NR	NR	NR

37 - Also available as a New unit
266 - 10 Stud, Hat Shaped
270 - 5 Stud, U Shape, .766 Dia. Studs
72 - Phenolic/Steel Face
267 - 10 Stud, U Shaped
271 - 6 Stud, Hat Shape
201 - Steel Piston
268 - 5 Stud, Hat Shape
365 - Caliper Loaded with Hardware and Disc Pads

MERITOR DRUM OR ROTOR NO.	CALIPER OR CYLINDER BORE SIZE	MERITOR CALIPER OR WHEEL CYLINDER (LEFT)	MERITOR CALIPER OR WHEEL CYLINDER (RIGHT)	MERITOR CALIPER OR WHEEL CYLINDER REPAIR KIT	MERITOR CALIPER PISTON	MERITOR MASTER CYLINDER	MERITOR MASTER CYLINDER KIT	MERITOR BRAKE HOSE (LEFT)	MERITOR BRAKE HOSE (RIGHT)
									ITE(Cont.)
					4000 SERIES: MEDIUM CONVENTIONALS(Cont.)				
23-123572-004[271]	2-7/8 "	R42R55250	R42R55250[37]	R4066365	R4090096[72]	-	-	R4577512	R4577512
R44141627[270]	2-7/8 "	R42R55250	R42R55250[37]	R4066365	R4090096[72]	-	-	R4577512	R4577512
23-123552-004[266]	2-19/32 "	R42R55314	R42R55314[37]	R40107771	R4090100P[72]	-	-	R4577512	R4577512
R44141627[270]	2-19/32 "	R42R55314	R42R55314[37]	R40107771	R4090100P[72]	-	-	R4577512	R4577512
R44141476[268]	2-7/8 "	R42R55250	R42R55250[37]	R4066365	R4090096[72]	-	-	-	-
23-123552-004[266]	3-3/8 "	R42R55099	R42R55098[37]	R4066780	R4090021[201]	-	-	-	-
23-123552-004[266]	2-7/8 "	R42R55250	R42R55250[37]	R4066365	R4090096[72]	-	-	-	-
R44141608[267]	2-19/32 "	R42R55314	R42R55314[37]	R40107771	R4090100P[72]	-	-	-	-
R44141608[267]	3-3/8 "	R42R55099	R42R55098[37]	R4066780	R4090021[201]	-	-	-	-
R44141476[268]	3-3/8 "	R42R55099	R42R55098[37]	R4066780	R4090021[201]	-	-	-	-
23-123572-004[271]	2-19/32 "	R42R55314	R42R55314[37]	R40107771	R4090100P[72]	-	-	-	-
23-123572-004[271]	2-7/8 "	R42R55250	R42R55250[37]	R4066365	R4090096[72]	-	-	-	-
23-123572-004[271]	3-3/8 "	R42R55099	R42R55098[37]	R4066780	R4090021[201]	-	-	-	-
R44141476[268]	2-19/32 "	R42R55314	R42R55314[37]	R40107771	R4090100P[72]	-	-	-	-
R44141608[267]	2-7/8 "	R42R55250	R42R55250[37]	R4066365	R4090096[72]	-	-	-	-
23-123552-004[266]	2-19/32 "	R42R55314	R42R55314[37]	R40107771	R4090100P[72]	-	-	-	-
23-123552-004[266]	2-19/32 "	R42R55314	R42R55314[37]	R40107771	R4090100P[72]	-	-	R4577512	R4577512
R44141627[270]	2-19/32 "	R42R55314	R42R55314[37]	R40107771	R4090100P[72]	-	-	R4577512	R4577512
R44141627[270]	2-7/8 "	R42R55250	R42R55250[37]	R4066365	R4090096[72]	-	-	R4577512	R4577512
23-123572-004[271]	2-7/8 "	R42R55250	R42R55250[37]	R4066365	R4090096[72]	-	-	R4577512	R4577512
23-123572-004[271]	2-19/32 "	R42R55314	R42R55314[37]	R40107771	R4090100P[72]	-	-	R4577512	R4577512
23-123552-004[266]	2-7/8 "	R42R55250	R42R55250[37]	R4066365	R4090096[72]	-	-	R4577512	R4577512
R44141608[267]	2-7/8 "	R42R55250	R42R55250[37]	R4066365	R4090096[72]	-	-	-	-
R44141608[267]	3-3/8 "	R42R55099	R42R55098[37]	R4066780	R4090021[201]	-	-	-	-
23-123552-004[266]	2-19/32 "	R42R55314	R42R55314[37]	R40107771	R4090100P[72]	-	-	-	-
23-123552-004[266]	2-7/8 "	R42R55250	R42R55250[37]	R4066365	R4090096[72]	-	-	-	-
R44141476[268]	2-19/32 "	R42R55314	R42R55314[37]	R40107771	R4090100P[72]	-	-	-	-
23-123552-004[266]	3-3/8 "	R42R55099	R42R55098[37]	R4066780	R4090021[201]	-	-	-	-
R44141476[268]	2-7/8 "	R42R55250	R42R55250[37]	R4066365	R4090096[72]	-	-	-	-
23-123572-004[271]	3-3/8 "	R42R55099	R42R55098[37]	R4066780	R4090021[201]	-	-	-	-
23-123572-004[271]	2-19/32 "	R42R55314	R42R55314[37]	R40107771	R4090100P[72]	-	-	-	-
23-123572-004[271]	2-7/8 "	R42R55250	R42R55250[37]	R4066365	R4090096[72]	-	-	-	-
R44141608[267]	2-19/32 "	R42R55314	R42R55314[37]	R40107771	R4090100P[72]	-	-	-	-
R44141476[268]	3-3/8 "	R42R55099	R42R55098[37]	R4066780	R4090021[201]	-	-	-	-
23-123572-004[271]	2-7/8 "	R42R55250	R42R55250[37]	R4066365	R4090096[72]	-	-	R4577512	R4577512
23-123572-004[271]	2-19/32 "	R42R55314	R42R55314[37]	R40107771	R4090100P[72]	-	-	R4577512	R4577512
23-123552-004[266]	2-7/8 "	R42R55250	R42R55250[37]	R4066365	R4090096[72]	-	-	R4577512	R4577512
23-123552-004[266]	2-19/32 "	R42R55314	R42R55314[37]	R40107771	R4090100P[72]	-	-	R4577512	R4577512
R44141627[270]	2-7/8 "	R42R55250	R42R55250[37]	R4066365	R4090096[72]	-	-	R4577512	R4577512
R44141627[270]	2-19/32 "	R42R55314	R42R55314[37]	R40107771	R4090100P[72]	-	-	R4577512	R4577512
					4200, 4300, 4400, 4600, 4700, 4900 SERIES: MEDIUM CONVENTIONALS				
23-123550-004[387]	66mm	R424153263	R424153263[365]	R4011752	R4011751	-	-	-	-
23-123550-004[387]	66mm	R424153263	R424153263[365]	R4011752	R4011751	-	-	-	-
23-123550-004[387]	66mm	R424153263	R424153263[365]	R4011752	R4011751	-	-	-	-
23-123550-004[387]	66mm	R424153263	R424153263[365]	R4011752	R4011751	-	-	-	-
23-123550-004[387]	73mm	R424153216	R424153216[365]	R4011758	R4011757	-	-	-	-
23-123550-004[387]	66mm	R424153263	R424153263[365]	R4011752	R4011751	-	-	-	-
23-123550-004[387]	66mm	R424153263	R424153263[365]	R4011752	R4011751	-	-	-	-
23-123550-004[387]	73mm	R424153216	R424153216[365]	R4011758	R4011757	-	-	-	-

387 - 10 Hole Rotor

MAKE MODEL YEAR AXLE CODE AXLE WEIGHT	AXLE & BRK. TYPE	BRK. MFG.	BRAKE SIZE	FMSI	MERITOR DISC PAD OR BRAKE SHOE	MERITOR GUIDE PIN OR RETURN SPRING KIT	MERITOR CALIPER HWD. KIT OR RETURN SPRING KIT	MERITOR ADJUSTER KIT (LEFT WHEEL)	MERITOR ADJUSTER KIT (RIGHT WHEEL)
ITE(Cont.)									
4200, 4300, 4400, 4600, 4700, 4900 SERIES: MEDIUM CONVENTIONALS(Cont.)									
2008 Through April S150-S 15,500 lb	Rd	Bosch		7654 - D786	MD786A	R4011754	NR	NR	NR
Through April Dana Spicer 17060S 17,500 lb	Rd	Bosch		7654 - D786	MD786A	R4011754	NR	NR	NR
Through April Dana Spicer 19060S 19,000 lb	Rd	Bosch		7654 - D786	MD786A	R4011754	NR	NR	NR
Through April Spicer M190-T 2-Speed 19,000 lb	Rd	Bosch		7654 - D786	MD786A	R4011754	NR	NR	NR
Through April Dana Spicer 21060S 21,000 lb	Rd	Bosch		7654 - D786	MD786A	R4011754	NR	NR	NR
Through April Dana Spicer 22060S 22,000 lb	Rd	Bosch		7654 - D786	MD786A	R4011754	NR	NR	NR
Through April Dana Spicer 23090S 23,000 lb	Rd	Bosch		7654 - D786	MD786A	R4011754	NR	NR	NR
Through April Dana Spicer 26050S 26,000 lb	Rd	Bosch		7655 - D786	MD786	R4011754	NR	NR	NR
2007 Spicer D800-F 8,000 lb	Fd	Bosch		7654 - D786	MD786A	R4011754	NR	NR	NR
I-100S 10,000 lb	Fd	Bosch		7654 - D786	MD786A	R4011754	NR	NR	NR
I-120S 11,000 lb	Fd	Bosch		7654 - D786	MD786A	R4011754	NR	NR	NR
I-120SG 12,000 lb	Fd Fd	Bosch Bosch		7654 - D786 7655 - D786	MD786A MD786	R4011754 R4011754	NR NR	NR NR	NR NR
S122-S 12,200 lb	Rd	Bosch		7654 - D786	MD786A	R4011754	NR	NR	NR
S135-S 13,500 lb	Rd	Bosch		7654 - D786	MD786A	R4011754	NR	NR	NR
I-140S 14,000 lb	Fd	Bosch		7655 - D786	MD786	R4011754	NR	NR	NR
S150-S 15,500 lb	Rd	Bosch		7654 - D786	MD786A	R4011754	NR	NR	NR
Dana Spicer 17060S 17,500 lb	Rd	Bosch		7654 - D786	MD786A	R4011754	NR	NR	NR
Dana Spicer 19060S 19,000 lb	Rd	Bosch		7654 - D786	MD786A	R4011754	NR	NR	NR
Spicer M190-T 2-Speed 19,000 lb	Rd	Bosch		7654 - D786	MD786A	R4011754	NR	NR	NR
Dana Spicer 21060S 21,000 lb	Rd	Bosch		7654 - D786	MD786A	R4011754	NR	NR	NR
Dana Spicer 22060S 22,000 lb	Rd	Bosch		7654 - D786	MD786A	R4011754	NR	NR	NR
Dana Spicer 23090S 23,000 lb	Rd	Bosch		7654 - D786	MD786A	R4011754	NR	NR	NR
Dana Spicer 26050S 26,000 lb	Rd	Bosch		7655 - D786	MD786	R4011754	NR	NR	NR
2006 Spicer D800-F 8,000 lb	Fd	Bosch		7654 - D786	MD786A	R4011754	NR	NR	NR
I-100S 10,000 lb	Fd	Bosch		7654 - D786	MD786A	R4011754	NR	NR	NR
I-120S 11,000 lb	Fd	Bosch		7654 - D786	MD786A	R4011754	NR	NR	NR

365 - Caliper Loaded with Hardware and Disc Pads 387 - 10 Hole Rotor

MERITOR DRUM OR ROTOR NO.	CALIPER OR CYLINDER BORE SIZE	MERITOR CALIPER OR WHEEL CYLINDER (LEFT)	MERITOR CALIPER OR WHEEL CYLINDER (RIGHT)	MERITOR CALIPER OR WHEEL CYLINDER REPAIR KIT	MERITOR CALIPER PISTON	MERITOR MASTER CYLINDER	MERITOR MASTER CYLINDER KIT	MERITOR BRAKE HOSE (LEFT)	MERITOR BRAKE HOSE (RIGHT)
ITE(Cont.)									
4200, 4300, 4400, 4600, 4700, 4900 SERIES: MEDIUM CONVENTIONALS(Cont.)									
23-123550-004[387]	66mm	R424153263	R424153263[365]	R4011752	R4011751	-	-	-	-
23-123550-004[387]	66mm	R424153263	R424153263[365]	R4011752	R4011751	-	-	-	-
23-123550-004[387]	66mm	R424153263	R424153263[365]	R4011752	R4011751	-	-	-	-
23-123550-004[387]	66mm	R424153263	R424153263[365]	R4011752	R4011751	-	-	-	-
23-123550-004[387]	66mm	R424153263	R424153263[365]	R4011752	R4011751	-	-	-	-
23-123550-004[387]	66mm	R424153263	R424153263[365]	R4011752	R4011751	-	-	-	-
23-123550-004[387]	66mm	R424153263	R424153263[365]	R4011752	R4011751	-	-	-	-
23-123550-004[387]	73mm	R424153216	R424153216[365]	R4011758	R4011757	-	-	-	-
23-123550-004[387]	66mm	R424153263	R424153263[365]	R4011752	R4011751	-	-	-	-
23-123550-004[387]	66mm	R424153263	R424153263[365]	R4011752	R4011751	-	-	-	-
23-123550-004[387]	66mm	R424153263	R424153263[365]	R4011752	R4011751	-	-	-	-
23-123550-004[387] 23-123550-004[387]	66mm 73mm	R424153263 R424153216	R424153263[365] R424153216[365]	R4011752 R4011758	R4011751 R4011757	- -	- -	- -	- -
23-123550-004[387]	66mm	R424153263	R424153263[365]	R4011752	R4011751	-	-	-	-
23-123550-004[387]	66mm	R424153263	R424153263[365]	R4011752	R4011751	-	-	-	-
23-123550-004[387]	73mm	R424153216	R424153216[365]	R4011758	R4011757	-	-	-	-
23-123550-004[387]	66mm	R424153263	R424153263[365]	R4011752	R4011751	-	-	-	-
23-123550-004[387]	66mm	R424153263	R424153263[365]	R4011752	R4011751	-	-	-	-
23-123550-004[387]	66mm	R424153263	R424153263[365]	R4011752	R4011751	-	-	-	-
23-123550-004[387]	66mm	R424153263	R424153263[365]	R4011752	R4011751	-	-	-	-
23-123550-004[387]	66mm	R424153263	R424153263[365]	R4011752	R4011751	-	-	-	-
23-123550-004[387]	66mm	R424153263	R424153263[365]	R4011752	R4011751	-	-	-	-
23-123550-004[387]	73mm	R424153216	R424153216[365]	R4011758	R4011757	-	-	-	-
23-123550-004[387]	66mm	R424153263	R424153263[365]	R4011752	R4011751	-	-	-	-
23-123550-004[387]	66mm	R424153263	R424153263[365]	R4011752	R4011751	-	-	-	-
23-123550-004[387]	66mm	R424153263	R424153263[365]	R4011752	R4011751	-	-	-	-

MAKE MODEL YEAR AXLE CODE AXLE WEIGHT	AXLE & BRK. TYPE	BRK. MFG.	BRAKE SIZE	FMSI	MERITOR DISC PAD OR BRAKE SHOE	MERITOR GUIDE PIN OR RETURN SPRING KIT	MERITOR CALIPER HWD. KIT OR RETURN SPRING KIT	MERITOR ADJUSTER KIT (LEFT WHEEL)	MERITOR ADJUSTER KIT (RIGHT WHEEL)
ITE(Cont.)									
4200, 4300, 4400, 4600, 4700, 4900 SERIES: MEDIUM CONVENTIONALS(Cont.)									
2006 I-120SG 12,000 lb	Fd Fd	Bosch Bosch		7654 - D786 7655 - D786	MD786A MD786	R4011754 R4011754	NR NR	NR NR	NR NR
S122-S 12,200 lb	Rd	Bosch		7654 - D786	MD786A	R4011754	NR	NR	NR
S135-S 13,500 lb	Rd	Bosch		7654 - D786	MD786A	R4011754	NR	NR	NR
I-140S 14,000 lb	Fd	Bosch		7655 - D786	MD786	R4011754	NR	NR	NR
S150-S 15,500 lb	Rd	Bosch		7654 - D786	MD786A	R4011754	NR	NR	NR
Dana Spicer 17060S 17,500 lb	Rd	Bosch		7654 - D786	MD786A	R4011754	NR	NR	NR
Dana Spicer 19060S 19,000 lb	Rd	Bosch		7654 - D786	MD786A	R4011754	NR	NR	NR
Spicer M190-T 2-Speed 19,000 lb	Rd	Bosch		7654 - D786	MD786A	R4011754	NR	NR	NR
Dana Spicer 21060S 21,000 lb	Rd	Bosch		7654 - D786	MD786A	R4011754	NR	NR	NR
Dana Spicer 22060S 22,000 lb	Rd	Bosch		7654 - D786	MD786A	R4011754	NR	NR	NR
Dana Spicer 23090S 23,000 lb	Rd	Bosch		7654 - D786	MD786A	R4011754	NR	NR	NR
Dana Spicer 26050S 26,000 lb	Rd	Bosch		7655 - D786	MD786	R4011754	NR	NR	NR
2005 Spicer D800-F 8,000 lb	Fd	Bosch		7654 - D786	MD786A	R4011754	NR	NR	NR
I-100S 10,000 lb	Fd	Bosch		7654 - D786	MD786A	R4011754	NR	NR	NR
I-120S 11,000 lb	Fd	Bosch		7654 - D786	MD786A	R4011754	NR	NR	NR
I-120SG 12,000 lb	Fd Fd	Bosch Bosch		7654 - D786 7655 - D786	MD786A MD786	R4011754 R4011754	NR NR	NR NR	NR NR
S122-S 12,200 lb	Rd	Bosch		7654 - D786	MD786A	R4011754	NR	NR	NR
S135-S 13,500 lb	Rd	Bosch		7654 - D786	MD786A	R4011754	NR	NR	NR
I-140S 14,000 lb	Fd	Bosch		7655 - D786	MD786	R4011754	NR	NR	NR
S150-S 15,500 lb	Rd	Bosch		7654 - D786	MD786A	R4011754	NR	NR	NR
Dana Spicer 17060S 17,500 lb	Rd	Bosch		7654 - D786	MD786A	R4011754	NR	NR	NR
Dana Spicer 19060S 19,000 lb	Rd	Bosch		7654 - D786	MD786A	R4011754	NR	NR	NR
Spicer M190-T 2-Speed 19,000 lb	Rd	Bosch		7654 - D786	MD786A	R4011754	NR	NR	NR
Dana Spicer 21060S 21,000 lb	Rd	Bosch		7654 - D786	MD786A	R4011754	NR	NR	NR
Dana Spicer 22060S 22,000 lb	Rd	Bosch		7654 - D786	MD786A	R4011754	NR	NR	NR
Dana Spicer 23090S 23,000 lb	Rd	Bosch		7654 - D786	MD786A	R4011754	NR	NR	NR
Dana Spicer 26050S 26,000 lb	Rd	Bosch		7655 - D786	MD786	R4011754	NR	NR	NR
2004 Spicer D800-F 8,000 lb	Fd	Bosch		7654 - D786	MD786A	R4011754	NR	NR	NR
I-100S 10,000 lb	Fd	Bosch		7654 - D786	MD786A	R4011754	NR	NR	NR
I-120S 11,000 lb	Fd	Bosch		7654 - D786	MD786A	R4011754	NR	NR	NR

365 - Caliper Loaded with Hardware and Disc Pads

387 - 10 Hole Rotor

MERITOR DRUM OR ROTOR NO.	CALIPER OR CYLINDER BORE SIZE	MERITOR CALIPER OR WHEEL CYLINDER (LEFT)	MERITOR CALIPER OR WHEEL CYLINDER (RIGHT)	MERITOR CALIPER OR WHEEL CYLINDER REPAIR KIT	MERITOR CALIPER PISTON	MERITOR MASTER CYLINDER	MERITOR MASTER CYLINDER KIT	MERITOR BRAKE HOSE (LEFT)	MERITOR BRAKE HOSE (RIGHT)
									ITE(Cont.)
4200, 4300, 4400, 4600, 4700, 4900 SERIES: MEDIUM CONVENTIONALS(Cont.)									
23-123550-004[387] 23-123550-004[387]	66mm 73mm	R424153263 R424153216	R424153263[365] R424153216[365]	R4011752 R4011758	R4011751 R4011757	- -	- -	- -	- -
23-123550-004[387]	66mm	R424153263	R424153263[365]	R4011752	R4011751	-	-	-	-
23-123550-004[387]	66mm	R424153263	R424153263[365]	R4011752	R4011751	-	-	-	-
23-123550-004[387]	73mm	R424153216	R424153216[365]	R4011758	R4011757	-	-	-	-
23-123550-004[387]	66mm	R424153263	R424153263[365]	R4011752	R4011751	-	-	-	-
23-123550-004[387]	66mm	R424153263	R424153263[365]	R4011752	R4011751	-	-	-	-
23-123550-004[387]	66mm	R424153263	R424153263[365]	R4011752	R4011751	-	-	-	-
23-123550-004[387]	66mm	R424153263	R424153263[365]	R4011752	R4011751	-	-	-	-
23-123550-004[387]	66mm	R424153263	R424153263[365]	R4011752	R4011751	-	-	-	-
23-123550-004[387]	66mm	R424153263	R424153263[365]	R4011752	R4011751	-	-	-	-
23-123550-004[387]	73mm	R424153216	R424153216[365]	R4011758	R4011757	-	-	-	-
23-123550-004[387]	66mm	R424153263	R424153263[365]	R4011752	R4011751	-	-	-	-
23-123550-004[387]	66mm	R424153263	R424153263[365]	R4011752	R4011751	-	-	-	-
23-123550-004[387]	66mm	R424153263	R424153263[365]	R4011752	R4011751	-	-	-	-
23-123550-004[387] 23-123550-004[387]	66mm 73mm	R424153263 R424153216	R424153263[365] R424153216[365]	R4011752 R4011758	R4011751 R4011757	- -	- -	- -	- -
23-123550-004[387]	66mm	R424153263	R424153263[365]	R4011752	R4011751	-	-	-	-
23-123550-004[387]	66mm	R424153263	R424153263[365]	R4011752	R4011751	-	-	-	-
23-123550-004[387]	73mm	R424153216	R424153216[365]	R4011758	R4011757	-	-	-	-
23-123550-004[387]	66mm	R424153263	R424153263[365]	R4011752	R4011751	-	-	-	-
23-123550-004[387]	66mm	R424153263	R424153263[365]	R4011752	R4011751	-	-	-	-
23-123550-004[387]	66mm	R424153263	R424153263[365]	R4011752	R4011751	-	-	-	-
23-123550-004[387]	66mm	R424153263	R424153263[365]	R4011752	R4011751	-	-	-	-
23-123550-004[387]	66mm	R424153263	R424153263[365]	R4011752	R4011751	-	-	-	-
23-123550-004[387]	66mm	R424153263	R424153263[365]	R4011752	R4011751	-	-	-	-
23-123550-004[387]	73mm	R424153216	R424153216[365]	R4011758	R4011757	-	-	-	-
23-123550-004[387]	66mm	R424153263	R424153263[365]	R4011752	R4011751	-	-	-	-
23-123550-004[387]	66mm	R424153263	R424153263[365]	R4011752	R4011751	-	-	-	-
23-123550-004[387]	66mm	R424153263	R424153263[365]	R4011752	R4011751	-	-	-	-

MAKE MODEL YEAR AXLE CODE AXLE WEIGHT	AXLE & BRK. TYPE	BRK. MFG.	BRAKE SIZE	FMSI	MERITOR DISC PAD OR BRAKE SHOE	MERITOR GUIDE PIN OR RETURN SPRING KIT	MERITOR CALIPER HWD. KIT OR RETURN SPRING KIT	MERITOR ADJUSTER KIT (LEFT WHEEL)	MERITOR ADJUSTER KIT (RIGHT WHEEL)
ITE(Cont.)									
4200, 4300, 4400, 4600, 4700, 4900 SERIES: MEDIUM CONVENTIONALS(Cont.)									
2004 I-120SG 12,000 lb	Fd Fd	Bosch Bosch		7654 - D786 7655 - D786	MD786A MD786	R4011754 R4011754	NR NR	NR NR	NR NR
S122-S 12,200 lb	Rd	Bosch		7654 - D786	MD786A	R4011754	NR	NR	NR
S135-S 13,500 lb	Rd	Bosch		7654 - D786	MD786A	R4011754	NR	NR	NR
I-140S 14,000 lb	Fd	Bosch		7655 - D786	MD786	R4011754	NR	NR	NR
S150-S 15,500 lb	Rd	Bosch		7654 - D786	MD786A	R4011754	NR	NR	NR
Dana Spicer 17060S 17,500 lb	Rd	Bosch		7654 - D786	MD786A	R4011754	NR	NR	NR
Dana Spicer 19060S 19,000 lb	Rd	Bosch		7654 - D786	MD786A	R4011754	NR	NR	NR
Spicer M190-T 2-Speed 19,000 lb	Rd	Bosch		7654 - D786	MD786A	R4011754	NR	NR	NR
Dana Spicer 21060S 21,000 lb	Rd	Bosch		7654 - D786	MD786A	R4011754	NR	NR	NR
Dana Spicer 22060S 22,000 lb	Rd	Bosch		7654 - D786	MD786A	R4011754	NR	NR	NR
Dana Spicer 23090S 23,000 lb	Rd	Bosch		7654 - D786	MD786A	R4011754	NR	NR	NR
Dana Spicer 26050S 26,000 lb	Rd	Bosch		7655 - D786	MD786	R4011754	NR	NR	NR
2003 Spicer D800-F 8,000 lb	Fd	Bosch		7654 - D786	MD786A	R4011754	NR	NR	NR
I-100S 10,000 lb	Fd	Bosch		7654 - D786	MD786A	R4011754	NR	NR	NR
I-120S 11,000 lb	Fd	Bosch		7654 - D786	MD786A	R4011754	NR	NR	NR
I-120SG 12,000 lb	Fd Fd	Bosch Bosch		7654 - D786 7655 - D786	MD786A MD786	R4011754 R4011754	NR NR	NR NR	NR NR
S122-S 12,200 lb	Rd	Bosch		7654 - D786	MD786A	R4011754	NR	NR	NR
S135-S 13,500 lb	Rd	Bosch		7654 - D786	MD786A	R4011754	NR	NR	NR
I-140S 14,000 lb	Fd	Bosch		7655 - D786	MD786	R4011754	NR	NR	NR
S150-S 15,500 lb	Rd	Bosch		7654 - D786	MD786A	R4011754	NR	NR	NR
Dana Spicer 17060S 17,500 lb	Rd	Bosch		7654 - D786	MD786A	R4011754	NR	NR	NR
Dana Spicer 19060S 19,000 lb	Rd	Bosch		7654 - D786	MD786A	R4011754	NR	NR	NR
Spicer M190-T 2-Speed 19,000 lb	Rd	Bosch		7654 - D786	MD786A	R4011754	NR	NR	NR
Dana Spicer 21060S 21,000 lb	Rd	Bosch		7654 - D786	MD786A	R4011754	NR	NR	NR
Dana Spicer 22060S 22,000 lb	Rd	Bosch		7654 - D786	MD786A	R4011754	NR	NR	NR
Dana Spicer 23090S 23,000 lb	Rd	Bosch		7654 - D786	MD786A	R4011754	NR	NR	NR
Dana Spicer 26050S 26,000 lb	Rd	Bosch		7655 - D786	MD786	R4011754	NR	NR	NR
2002 Spicer D800-F 8,000 lb	Fd	Bosch		7654 - D786	MD786A	R4011754	NR	NR	NR
I-100S 10,000 lb	Fd	Bosch		7654 - D786	MD786A	R4011754	NR	NR	NR
I-120S 11,000 lb	Fd	Bosch		7654 - D786	MD786A	R4011754	NR	NR	NR

365 - Caliper Loaded with Hardware and Disc Pads

387 - 10 Hole Rotor

MERITOR DRUM OR ROTOR NO.	CALIPER OR CYLINDER BORE SIZE	MERITOR CALIPER OR WHEEL CYLINDER (LEFT)	MERITOR CALIPER OR WHEEL CYLINDER (RIGHT)	MERITOR CALIPER OR WHEEL CYLINDER REPAIR KIT	MERITOR CALIPER PISTON	MERITOR MASTER CYLINDER	MERITOR MASTER CYLINDER KIT	MERITOR BRAKE HOSE (LEFT)	MERITOR BRAKE HOSE (RIGHT)
									ITE(Cont.)
4200, 4300, 4400, 4600, 4700, 4900 SERIES: MEDIUM CONVENTIONALS(Cont.)									
23-123550-004[387] 23-123550-004[387]	66mm 73mm	R424153263 R424153216	R424153263[365] R424153216[365]	R4011752 R4011758	R4011751 R4011757	- -	- -	- -	- -
23-123550-004[387]	66mm	R424153263	R424153263[365]	R4011752	R4011751	-	-	-	-
23-123550-004[387]	66mm	R424153263	R424153263[365]	R4011752	R4011751	-	-	-	-
23-123550-004[387]	73mm	R424153216	R424153216[365]	R4011758	R4011757	-	-	-	-
23-123550-004[387]	66mm	R424153263	R424153263[365]	R4011752	R4011751	-	-	-	-
23-123550-004[387]	66mm	R424153263	R424153263[365]	R4011752	R4011751	-	-	-	-
23-123550-004[387]	66mm	R424153263	R424153263[365]	R4011752	R4011751	-	-	-	-
23-123550-004[387]	66mm	R424153263	R424153263[365]	R4011752	R4011751	-	-	-	-
23-123550-004[387]	66mm	R424153263	R424153263[365]	R4011752	R4011751	-	-	-	-
23-123550-004[387]	66mm	R424153263	R424153263[365]	R4011752	R4011751	-	-	-	-
23-123550-004[387]	66mm	R424153263	R424153263[365]	R4011752	R4011751	-	-	-	-
23-123550-004[387]	73mm	R424153216	R424153216[365]	R4011758	R4011757	-	-	-	-
23-123550-004[387]	66mm	R424153263	R424153263[365]	R4011752	R4011751	-	-	-	-
23-123550-004[387]	66mm	R424153263	R424153263[365]	R4011752	R4011751	-	-	-	-
23-123550-004[387]	66mm	R424153263	R424153263[365]	R4011752	R4011751	-	-	-	-
23-123550-004[387] 23-123550-004[387]	66mm 73mm	R424153263 R424153216	R424153263[365] R424153216[365]	R4011752 R4011758	R4011751 R4011757	- -	- -	- -	- -
23-123550-004[387]	66mm	R424153263	R424153263[365]	R4011752	R4011751	-	-	-	-
23-123550-004[387]	66mm	R424153263	R424153263[365]	R4011752	R4011751	-	-	-	-
23-123550-004[387]	73mm	R424153216	R424153216[365]	R4011758	R4011757	-	-	-	-
23-123550-004[387]	66mm	R424153263	R424153263[365]	R4011752	R4011751	-	-	-	-
23-123550-004[387]	66mm	R424153263	R424153263[365]	R4011752	R4011751	-	-	-	-
23-123550-004[387]	66mm	R424153263	R424153263[365]	R4011752	R4011751	-	-	-	-
23-123550-004[387]	66mm	R424153263	R424153263[365]	R4011752	R4011751	-	-	-	-
23-123550-004[387]	66mm	R424153263	R424153263[365]	R4011752	R4011751	-	-	-	-
23-123550-004[387]	66mm	R424153263	R424153263[365]	R4011752	R4011751	-	-	-	-
23-123550-004[387]	73mm	R424153216	R424153216[365]	R4011758	R4011757	-	-	-	-
23-123550-004[387]	66mm	R424153263	R424153263[365]	R4011752	R4011751	-	-	-	-
23-123550-004[387]	66mm	R424153263	R424153263[365]	R4011752	R4011751	-	-	-	-
23-123550-004[387]	66mm	R424153263	R424153263[365]	R4011752	R4011751	-	-	-	-

MAKE MODEL YEAR AXLE CODE AXLE WEIGHT	AXLE & BRK. TYPE	BRK. MFG.	BRAKE SIZE	FMSI	MERITOR DISC PAD OR BRAKE SHOE	MERITOR GUIDE PIN OR RETURN SPRING KIT	MERITOR CALIPER HWD. KIT OR RETURN SPRING KIT	MERITOR ADJUSTER KIT (LEFT WHEEL)	MERITOR ADJUSTER KIT (RIGHT WHEEL)
ITE(Cont.)									
4200, 4300, 4400, 4600, 4700, 4900 SERIES: MEDIUM CONVENTIONALS(Cont.)									
2002 I-120SG 12,000 lb	Fd Fd	Bosch Bosch		7654 - D786 7655 - D786	MD786A MD786	R4011754 R4011754	NR NR	NR NR	NR NR
S122-S 12,200 lb	Rd	Bosch		7654 - D786	MD786A	R4011754	NR	NR	NR
S135-S 13,500 lb	Rd	Bosch		7654 - D786	MD786A	R4011754	NR	NR	NR
I-140S 14,000 lb	Fd	Bosch		7655 - D786	MD786	R4011754	NR	NR	NR
S150-S 15,500 lb	Rd	Bosch		7654 - D786	MD786A	R4011754	NR	NR	NR
Dana Spicer 17060S 17,500 lb	Rd	Bosch		7654 - D786	MD786A	R4011754	NR	NR	NR
Dana Spicer 19060S 19,000 lb	Rd	Bosch		7654 - D786	MD786A	R4011754	NR	NR	NR
Spicer M190-T 2-Speed 19,000 lb	Rd	Bosch		7654 - D786	MD786A	R4011754	NR	NR	NR
Dana Spicer 21060S 21,000 lb	Rd	Bosch		7654 - D786	MD786A	R4011754	NR	NR	NR
Dana Spicer 22060S 22,000 lb	Rd	Bosch		7654 - D786	MD786A	R4011754	NR	NR	NR
Dana Spicer 23090S 23,000 lb	Rd	Bosch		7654 - D786	MD786A	R4011754	NR	NR	NR
Dana Spicer 26050S 26,000 lb	Rd	Bosch		7655 - D786	MD786	R4011754	NR	NR	NR
2001 Spicer D800-F 8,000 lb	Fd	Bosch		7654 - D786	MD786A	R4011754	NR	NR	NR
I-100S 10,000 lb	Fd	Bosch		7654 - D786	MD786A	R4011754	NR	NR	NR
I-120S 11,000 lb	Fd	Bosch		7654 - D786	MD786A	R4011754	NR	NR	NR
I-120SG 12,000 lb	Fd Fd	Bosch Bosch		7654 - D786 7655 - D786	MD786A MD786	R4011754 R4011754	NR NR	NR NR	NR NR
S122-S 12,200 lb	Rd	Bosch		7654 - D786	MD786A	R4011754	NR	NR	NR
S135-S 13,500 lb	Rd	Bosch		7654 - D786	MD786A	R4011754	NR	NR	NR
I-140S 14,000 lb	Fd	Bosch		7655 - D786	MD786	R4011754	NR	NR	NR
S150-S 15,500 lb	Rd	Bosch		7654 - D786	MD786A	R4011754	NR	NR	NR
Dana Spicer 17060S 17,500 lb	Rd	Bosch		7654 - D786	MD786A	R4011754	NR	NR	NR
Dana Spicer 19060S 19,000 lb	Rd	Bosch		7654 - D786	MD786A	R4011754	NR	NR	NR
Spicer M190-T 2-Speed 19,000 lb	Rd	Bosch		7654 - D786	MD786A	R4011754	NR	NR	NR
Dana Spicer 21060S 21,000 lb	Rd	Bosch		7654 - D786	MD786A	R4011754	NR	NR	NR
Dana Spicer 22060S 22,000 lb	Rd	Bosch		7654 - D786	MD786A	R4011754	NR	NR	NR
Dana Spicer 23090S 23,000 lb	Rd	Bosch		7654 - D786	MD786A	R4011754	NR	NR	NR
Dana Spicer 26050S 26,000 lb	Rd	Bosch		7655 - D786	MD786	R4011754	NR	NR	NR
2000 Spicer D800-F 8,000 lb	Fd	Bosch		7654 - D786	MD786A	R4011754	NR	NR	NR
I-100S 10,000 lb	Fd	Bosch		7654 - D786	MD786A	R4011754	NR	NR	NR
I-120S 11,000 lb	Fd	Bosch		7654 - D786	MD786A	R4011754	NR	NR	NR

365 - Caliper Loaded with Hardware and Disc Pads

387 - 10 Hole Rotor

MERITOR DRUM OR ROTOR NO.	CALIPER OR CYLINDER BORE SIZE	MERITOR CALIPER OR WHEEL CYLINDER (LEFT)	MERITOR CALIPER OR WHEEL CYLINDER (RIGHT)	MERITOR CALIPER OR WHEEL CYLINDER REPAIR KIT	MERITOR CALIPER PISTON	MERITOR MASTER CYLINDER	MERITOR MASTER CYLINDER KIT	MERITOR BRAKE HOSE (LEFT)	MERITOR BRAKE HOSE (RIGHT)
									ITE(Cont.)
4200, 4300, 4400, 4600, 4700, 4900 SERIES: MEDIUM CONVENTIONALS(Cont.)									
23-123550-004[387] 23-123550-004[387]	66mm 73mm	R424153263 R424153216	R424153263[365] R424153216[365]	R4011752 R4011758	R4011751 R4011757	- -	- -	- -	- -
23-123550-004[387]	66mm	R424153263	R424153263[365]	R4011752	R4011751	-	-	-	-
23-123550-004[387]	66mm	R424153263	R424153263[365]	R4011752	R4011751	-	-	-	-
23-123550-004[387]	73mm	R424153216	R424153216[365]	R4011758	R4011757	-	-	-	-
23-123550-004[387]	66mm	R424153263	R424153263[365]	R4011752	R4011751	-	-	-	-
23-123550-004[387]	66mm	R424153263	R424153263[365]	R4011752	R4011751	-	-	-	-
23-123550-004[387]	66mm	R424153263	R424153263[365]	R4011752	R4011751	-	-	-	-
23-123550-004[387]	66mm	R424153263	R424153263[365]	R4011752	R4011751	-	-	-	-
23-123550-004[387]	66mm	R424153263	R424153263[365]	R4011752	R4011751	-	-	-	-
23-123550-004[387]	66mm	R424153263	R424153263[365]	R4011752	R4011751	-	-	-	-
23-123550-004[387]	73mm	R424153216	R424153216[365]	R4011758	R4011757	-	-	-	-
23-123550-004[387]	66mm	R424153263	R424153263[365]	R4011752	R4011751	-	-	-	-
23-123550-004[387]	66mm	R424153263	R424153263[365]	R4011752	R4011751	-	-	-	-
23-123550-004[387]	66mm	R424153263	R424153263[365]	R4011752	R4011751	-	-	-	-
23-123550-004[387] 23-123550-004[387]	66mm 73mm	R424153263 R424153216	R424153263[365] R424153216[365]	R4011752 R4011758	R4011751 R4011757	- -	- -	- -	- -
23-123550-004[387]	66mm	R424153263	R424153263[365]	R4011752	R4011751	-	-	-	-
23-123550-004[387]	66mm	R424153263	R424153263[365]	R4011752	R4011751	-	-	-	-
23-123550-004[387]	73mm	R424153216	R424153216[365]	R4011758	R4011757	-	-	-	-
23-123550-004[387]	66mm	R424153263	R424153263[365]	R4011752	R4011751	-	-	-	-
23-123550-004[387]	66mm	R424153263	R424153263[365]	R4011752	R4011751	-	-	-	-
23-123550-004[387]	66mm	R424153263	R424153263[365]	R4011752	R4011751	-	-	-	-
23-123550-004[387]	66mm	R424153263	R424153263[365]	R4011752	R4011751	-	-	-	-
23-123550-004[387]	66mm	R424153263	R424153263[365]	R4011752	R4011751	-	-	-	-
23-123550-004[387]	66mm	R424153263	R424153263[365]	R4011752	R4011751	-	-	-	-
23-123550-004[387]	73mm	R424153216	R424153216[365]	R4011758	R4011757	-	-	-	-
23-123550-004[387]	66mm	R424153263	R424153263[365]	R4011752	R4011751	-	-	-	-
23-123550-004[387]	66mm	R424153263	R424153263[365]	R4011752	R4011751	-	-	-	-
23-123550-004[387]	66mm	R424153263	R424153263[365]	R4011752	R4011751	-	-	-	-

MAKE MODEL YEAR AXLE CODE AXLE WEIGHT	AXLE & BRK. TYPE	BRK. MFG.	BRAKE SIZE	FMSI	MERITOR DISC PAD OR BRAKE SHOE	MERITOR GUIDE PIN OR RETURN SPRING KIT	MERITOR CALIPER HWD. KIT OR RETURN SPRING KIT	MERITOR ADJUSTER KIT (LEFT WHEEL)	MERITOR ADJUSTER KIT (RIGHT WHEEL)
ITE(Cont.)									
4200, 4300, 4400, 4600, 4700, 4900 SERIES: MEDIUM CONVENTIONALS(Cont.)									
2000 I-120SG 12,000 lb	Fd Fd	Bosch Bosch		7654 - D786 7655 - D786	MD786A MD786	R4011754 R4011754	NR NR	NR NR	NR NR
S122-S 12,200 lb	Rd	Bosch		7654 - D786	MD786A	R4011754	NR	NR	NR
S135-S 13,500 lb	Rd	Bosch		7654 - D786	MD786A	R4011754	NR	NR	NR
I-140S 14,000 lb	Fd	Bosch		7655 - D786	MD786	R4011754	NR	NR	NR
S150-S 15,500 lb	Rd	Bosch		7654 - D786	MD786A	R4011754	NR	NR	NR
Dana Spicer 17060S 17,500 lb	Rd	Bosch		7654 - D786	MD786A	R4011754	NR	NR	NR
Dana Spicer 19060S 19,000 lb	Rd	Bosch		7654 - D786	MD786A	R4011754	NR	NR	NR
Spicer M190-T 2-Speed 19,000 lb	Rd	Bosch		7654 - D786	MD786A	R4011754	NR	NR	NR
Dana Spicer 21060S 21,000 lb	Rd	Bosch		7654 - D786	MD786A	R4011754	NR	NR	NR
Dana Spicer 22060S 22,000 lb	Rd	Bosch		7654 - D786	MD786A	R4011754	NR	NR	NR
Dana Spicer 23090S 23,000 lb	Rd	Bosch		7654 - D786	MD786A	R4011754	NR	NR	NR
Dana Spicer 26050S 26,000 lb	Rd	Bosch		7655 - D786	MD786	R4011754	NR	NR	NR
500 SERIES: LFE MEDIUM DUTY									
1994 Air Over Hydraulic Brakes	Fa Ra		370mm x 100mm 370mm x 135mm	1411 - S603 1412 - S604	R409864 R467407	R409843 R409843	R409844 R409844	N/A N/A	N/A N/A
1993	Fa Ra		370mm x 100mm 370mm x 135mm	1411 - S603 1412 - S604	R409864 R467407	R409843 R409843	R409844 R409844	N/A N/A	N/A N/A
1992	Fa Ra		370mm x 100mm 370mm x 135mm	1411 - S603 1412 - S604	R409864 R467407	R409843 R409843	R409844 R409844	N/A N/A	N/A N/A
1991	Fa Ra		370mm x 100mm 370mm x 135mm	1411 - S603 1412 - S604	R409864 R467407	R409843 R409843	R409844 R409844	N/A N/A	N/A N/A
1990	Fa Ra		370mm x 100mm 370mm x 135mm	1411 - S603 1412 - S604	R409864 R467407	R409843 R409843	R409844 R409844	N/A N/A	N/A N/A
1989	Fa Ra		370mm x 100mm 370mm x 135mm	1411 - S603 1412 - S604	R409864 R467407	R409843 R409843	R409844 R409844	N/A N/A	N/A N/A
1988	Fa Ra		370mm x 100mm 370mm x 135mm	1411 - S603 1412 - S604	R409864 R467407	R409843 R409843	R409844 R409844	N/A N/A	N/A N/A
1987	Fa Ra		370mm x 100mm 370mm x 135mm	1411 - S603 1412 - S604	R409864 R467407	R409843 R409843	R409844 R409844	N/A N/A	N/A N/A
1986	Fa Ra		370mm x 100mm 370mm x 135mm	1411 - S603 1412 - S604	R409864 R467407	R409843 R409843	R409844 R409844	N/A N/A	N/A N/A
700 SERIES: LFE MEDIUM DUTY									
1994	Fa Ra		400mm x 120mm 410mm x 154mm	1422 - S617 1419 - S614	R467410 R467408	R409843 R409853	R409844 R409844	N/A N/A	N/A N/A
1993	Fa Ra		400mm x 120mm 410mm x 154mm	1422 - S617 1419 - S614	R467410 R467408	R409843 R409853	R409844 R409844	N/A N/A	N/A N/A
1992	Fa		400mm x 120mm	1422 - S617	R467410	R409843	R409844	N/A	N/A

365 - Caliper Loaded with Hardware and Disc Pads 387 - 10 Hole Rotor

MERITOR DRUM OR ROTOR NO.	CALIPER OR CYLINDER BORE SIZE	MERITOR CALIPER OR WHEEL CYLINDER (LEFT)	MERITOR CALIPER OR WHEEL CYLINDER (RIGHT)	MERITOR CALIPER OR WHEEL CYLINDER REPAIR KIT	MERITOR CALIPER PISTON	MERITOR MASTER CYLINDER	MERITOR MASTER CYLINDER KIT	MERITOR BRAKE HOSE (LEFT)	MERITOR BRAKE HOSE (RIGHT)
									ITE(Cont.)
4200, 4300, 4400, 4600, 4700, 4900 SERIES: MEDIUM CONVENTIONALS(Cont.)									
23-123550-004[387]	66mm	R424153263	R424153263[365]	R4011752	R4011751	-	-	-	-
23-123550-004[387]	73mm	R424153216	R424153216[365]	R4011758	R4011757	-	-	-	-
23-123550-004[387]	66mm	R424153263	R424153263[365]	R4011752	R4011751	-	-	-	-
23-123550-004[387]	66mm	R424153263	R424153263[365]	R4011752	R4011751	-	-	-	-
23-123550-004[387]	73mm	R424153216	R424153216[365]	R4011758	R4011757	-	-	-	-
23-123550-004[387]	66mm	R424153263	R424153263[365]	R4011752	R4011751	-	-	-	-
23-123550-004[387]	66mm	R424153263	R424153263[365]	R4011752	R4011751	-	-	-	-
23-123550-004[387]	66mm	R424153263	R424153263[365]	R4011752	R4011751	-	-	-	-
23-123550-004[387]	66mm	R424153263	R424153263[365]	R4011752	R4011751	-	-	-	-
23-123550-004[387]	66mm	R424153263	R424153263[365]	R4011752	R4011751	-	-	-	-
23-123550-004[387]	66mm	R424153263	R424153263[365]	R4011752	R4011751	-	-	-	-
23-123550-004[387]	73mm	R424153216	R424153216[365]	R4011758	R4011757	-	-	-	-
500 SERIES: LFE MEDIUM DUTY									
N/A	1.4375	-	-	N/A	NR	-	-	-	-
N/A	1-1/2 "	-	-	N/A	NR	-	-	R45165	R45165
N/A	1.4375	-	-	N/A	NR	-	-	-	-
N/A	1-1/2 "	-	-	N/A	NR	-	-	R45165	R45165
N/A	1.4375	-	-	N/A	NR	-	-	-	-
N/A	1-1/2 "	-	-	N/A	NR	-	-	R45165	R45165
N/A	1.4375	-	-	N/A	NR	-	-	-	-
N/A	1-1/2 "	-	-	N/A	NR	-	-	R45165	R45165
N/A	1.4375	-	-	N/A	NR	-	-	-	-
N/A	1-1/2 "	-	-	N/A	NR	-	-	R45165	R45165
N/A	1.4375	-	-	N/A	NR	-	-	-	-
N/A	1-1/2 "	-	-	N/A	NR	-	-	R45165	R45165
N/A	1.4375	-	-	N/A	NR	-	-	-	-
N/A	1-1/2 "	-	-	N/A	NR	-	-	R45165	R45165
700 SERIES: LFE MEDIUM DUTY									
N/A	1-1/2 "	-	-	N/A	NR	-	-	-	-
N/A	1-11/16 "	-	-	N/A	NR	-	-	R45165	R45165
N/A	1-1/2 "	-	-	N/A	NR	-	-	-	-
N/A	1-11/16 "	-	-	N/A	NR	-	-	R45165	R45165
N/A	1-1/2 "	-	-	N/A	NR	-	-	-	-

MAKE MODEL YEAR AXLE CODE AXLE WEIGHT	AXLE & BRK. TYPE	BRK. MFG.	BRAKE SIZE	FMSI	MERITOR DISC PAD OR BRAKE SHOE	MERITOR GUIDE PIN OR RETURN SPRING KIT	MERITOR CALIPER HWD. KIT OR RETURN SPRING KIT	MERITOR ADJUSTER KIT (LEFT WHEEL)	MERITOR ADJUSTER KIT (RIGHT WHEEL)
ITE(Cont.)									
700 SERIES: LFE MEDIUM DUTY(Cont.)									
1992 Air Over Hydraulic Brakes	Ra		410mm x 154mm	1419 - S614	R467408	R409853	R409844	N/A	N/A
1991	Fa		400mm x 120mm	1422 - S617	R467410	R409843	R409844	N/A	N/A
	Ra		410mm x 154mm	1419 - S614	R467408	R409853	R409844	N/A	N/A
1990	Fa		400mm x 120mm	1422 - S617	R467410	R409843	R409844	N/A	N/A
	Ra		410mm x 154mm	1419 - S614	R467408	R409853	R409844	N/A	N/A
1989	Fa		400mm x 120mm	1422 - S617	R467410	R409843	R409844	N/A	N/A
	Ra		410mm x 154mm	1419 - S614	R467408	R409853	R409844	N/A	N/A
1988	Fa		400mm x 120mm	1422 - S617	R467410	R409843	R409844	N/A	N/A
	Ra		410mm x 154mm	1419 - S614	R467408	R409853	R409844	N/A	N/A
1987	Fa		400mm x 120mm	1422 - S617	R467410	R409843	R409844	N/A	N/A
	Ra		410mm x 154mm	1419 - S614	R467408	R409853	R409844	N/A	N/A
1986	Fa		400mm x 120mm	1422 - S617	R467410	R409843	R409844	N/A	N/A
	Ra		410mm x 154mm	1419 - S614	R467408	R409853	R409844	N/A	N/A
IVECO									
10-14AS									
1989	Fd			7817 - D494	MD494	N/A	N/A	NR	NR
12-16AS									
1989	Fd			7817 - D494	MD494	N/A	N/A	NR	NR
18-14									
1989	Fd			7817 - D494	MD494	N/A	N/A	NR	NR
23-16									
1990	Fd			7816 - D442	MD442	N/A	N/A	NR	NR
1989	Fd			7816 - D442	MD442	N/A	N/A	NR	NR
EURO 110									
1988	Fa		325mm x 120mm	1488	N/A	NR	R407105[347]	R407100	R407100
	Ra		325mm x 120mm	1488	N/A	NR	R407105[347]	R407100	R407100
1987	Fa		325mm x 120mm	1488	N/A	NR	R407105[347]	R407100	R407100
	Ra		325mm x 120mm	1488	N/A	NR	R407105[347]	R407100	R407100
EURO 220									
1988	Fa		325mm x 120mm	1488	N/A	NR	R407105[347]	R407100	R407100
	Ra		325mm x 120mm	1488	N/A	NR	R407105[347]	R407100	R407100
1987	Fa		325mm x 120mm	1488	N/A	NR	R407105[347]	R407100	R407100
	Ra		325mm x 120mm	1488	N/A	NR	R407105[347]	R407100	R407100
EURO TURBO 12-12									
1991	Ra		325mm x 120mm	1488	N/A	NR	R407105[347]	R407100	R407100
1990	Ra		325mm x 120mm	1488	N/A	NR	R407105[347]	R407100	R407100
1989	Fd			7817 - D494	MD494	N/A	N/A	NR	NR
	Ra		325mm x 120mm	1488	N/A	NR	R407105[347]	R407100	R407100
EURO TURBO 120A									
1988	Fa		325mm x 120mm	1488	N/A	NR	R407105[347]	R407100	R407100

347 - Return Springs Also Included in R407105

MERITOR DRUM OR ROTOR NO.	CALIPER OR CYLINDER BORE SIZE	MERITOR CALIPER OR WHEEL CYLINDER (LEFT)	MERITOR CALIPER OR WHEEL CYLINDER (RIGHT)	MERITOR CALIPER OR WHEEL CYLINDER REPAIR KIT	MERITOR CALIPER PISTON	MERITOR MASTER CYLINDER	MERITOR MASTER CYLINDER KIT	MERITOR BRAKE HOSE (LEFT)	MERITOR BRAKE HOSE (RIGHT)
									ITE(Cont.)
									700 SERIES: LFE MEDIUM DUTY(Cont.)
N/A	1-11/16 "	-	-	N/A	NR	-	-	R45165	R45165
N/A	1-1/2 "	-	-	N/A	NR	-	-	-	-
N/A	1-11/16 "	-	-	N/A	NR	-	-	R45165	R45165
N/A	1-1/2 "	-	-	N/A	NR	-	-	-	-
N/A	1-11/16 "	-	-	N/A	NR	-	-	R45165	R45165
N/A	1-1/2 "	-	-	N/A	NR	-	-	-	-
N/A	1-11/16 "	-	-	N/A	NR	-	-	R45165	R45165
N/A	1-1/2 "	-	-	N/A	NR	-	-	-	-
N/A	1-11/16 "	-	-	N/A	NR	-	-	R45165	R45165
N/A	1-1/2 "	-	-	N/A	NR	-	-	-	-
N/A	1-11/16 "	-	-	N/A	NR	-	-	R45165	R45165
N/A	1-1/2 "	-	-	N/A	NR	-	-	-	-
N/A	1-11/16 "	-	-	N/A	NR	-	-	R45165	R45165
									IVECO
									10-14AS
N/A		N/A	N/A	N/A	N/A	-	-	-	-
									12-16AS
N/A		N/A	N/A	N/A	N/A	-	-	-	-
									18-14
N/A		N/A	N/A	N/A	N/A	-	-	-	-
									23-16
N/A		N/A	N/A	N/A	N/A	-	-	-	-
N/A		N/A	N/A	N/A	N/A	-	-	-	-
									EURO 110
R447202	1-1/16 "	R417088	R417088	N/A	NR	-	-	-	-
R447202	15/16 "	R417089	R417089	N/A	NR	-	-	-	-
R447202	1-1/16 "	R417088	R417088	N/A	NR	-	-	-	-
R447202	15/16 "	R417089	R417089	N/A	NR	-	-	-	-
									EURO 220
R447202	1 "	N/A	N/A	N/A	NR	-	-	-	-
R447202	1 "	N/A	N/A	N/A	NR	-	-	-	-
R447202	1 "	N/A	N/A	N/A	NR	-	-	-	-
R447202	1 "	N/A	N/A	N/A	NR	-	-	-	-
									EURO TURBO 12-12
R447202		N/A	N/A	N/A	NR	-	-	-	-
R447202		N/A	N/A	N/A	NR	-	-	-	-
N/A		N/A	N/A	N/A	N/A	-	-	-	-
R447202		N/A	N/A	N/A	NR	-	-	-	-
									EURO TURBO 120A
R447202	1-1/16 "	R417088	R417088	N/A	NR	-	-	-	-

MAKE MODEL YEAR AXLE CODE AXLE WEIGHT	AXLE & BRK. TYPE	BRK. MFG.	BRAKE SIZE	FMSI	MERITOR DISC PAD OR BRAKE SHOE	MERITOR GUIDE PIN OR RETURN SPRING KIT	MERITOR CALIPER HWD. KIT OR RETURN SPRING KIT	MERITOR ADJUSTER KIT (LEFT WHEEL)	MERITOR ADJUSTER KIT (RIGHT WHEEL)
IVECO(Cont.)									
EURO TURBO 120A(Cont.)									
1988	Ra		325mm x 120mm	1488	N/A	NR	R407105[347]	R407100	R407100
1987	Fa		325mm x 120mm	1488	N/A	NR	R407105[347]	R407100	R407100
	Ra		325mm x 120mm	1488	N/A	NR	R407105[347]	R407100	R407100
EURO TURBO 15-14									
1991	Fd			7817 - D494	MD494	N/A	N/A	NR	NR
	Ra		325mm x 120mm	1488	N/A	NR	R407105[347]	R407100	R407100
1990	Fd			7817 - D494	MD494	N/A	N/A	NR	NR
	Ra		325mm x 120mm	1488	N/A	NR	R407105[347]	R407100	R407100
1989	Fd			7817 - D494	MD494	N/A	N/A	NR	NR
	Ra		325mm x 120mm	1488	N/A	NR	R407105[347]	R407100	R407100
EURO TURBO 220									
1988	Fa		325mm x 120mm	1488	N/A	NR	R407105[347]	R407100	R407100
	Ra		325mm x 120mm	1488	N/A	NR	R407105[347]	R407100	R407100
1987	Fa		325mm x 120mm	1488	N/A	NR	R407105[347]	R407100	R407100
	Ra		325mm x 120mm	1488	N/A	NR	R407105[347]	R407100	R407100
EURO TURBO 230									
1988	Ra		325mm x 120mm	1488	N/A	NR	R407105[347]	R407099	R407099
1987	Ra		325mm x 120mm	1488	N/A	NR	R407105[347]	R407099	R407099
Z100									
1986	Fa		325mm x 100mm	1393	N/A	NR	R407104[348]	R407099	R407099[350]
	Ra		325mm x 100mm	1393	N/A	NR	R407104[348]	R407099	R407099[350]
1985	Fa		325mm x 100mm	1393	N/A	NR	R407104[348]	R407099	R407099[350]
	Ra		325mm x 100mm	1393	N/A	NR	R407104[348]	R407099	R407099[350]
1984	Fa		325mm x 100mm	1393	N/A	NR	R407104[348]	R407099	R407099[350]
	Ra		325mm x 100mm	1393	N/A	NR	R407104[348]	R407099	R407099[350]
1983	Fa		325mm x 100mm	1393	N/A	NR	R407104[348]	R407099	R407099[350]
	Ra		325mm x 100mm	1393	N/A	NR	R407104[348]	R407099	R407099[350]
1982	Fa		325mm x 100mm	1393	N/A	NR	R407104[348]	R407099	R407099[350]
	Ra		325mm x 100mm	1393	N/A	NR	R407104[348]	R407099	R407099[350]
Z110									
1986	Fa		325mm x 100mm	1393	N/A	NR	R407104[348]	R407099	R407099[350]
	Ra		325mm x 100mm	1393	N/A	NR	R407104[348]	R407099	R407099[350]
1985	Fa		325mm x 100mm	1393	N/A	NR	R407104[348]	R407099	R407099[350]
	Ra		325mm x 100mm	1393	N/A	NR	R407104[348]	R407099	R407099[350]
1984	Fa		325mm x 100mm	1393	N/A	NR	R407104[348]	R407099	R407099[350]
	Ra		325mm x 100mm	1393	N/A	NR	R407104[348]	R407099	R407099[350]
1983	Fa		325mm x 100mm	1393	N/A	NR	R407104[348]	R407099	R407099[350]
	Ra		325mm x 100mm	1393	N/A	NR	R407104[348]	R407099	R407099[350]
1982	Fa		325mm x 100mm	1393	N/A	NR	R407104[348]	R407099	R407099[350]
	Ra		325mm x 100mm	1393	N/A	NR	R407104[348]	R407099	R407099[350]
Z120TA									
1986	Fa		325mm x 100mm	1393	N/A	NR	R407104[348]	R407099	R407099[350]

46 - R417086 Has 15/16" Bore Size
347 - Return Springs Also Included in R407105
348 - Return Springs Also Included in E407104
350 - 33 Tooth Adjuster

MERITOR DRUM OR ROTOR NO.	CALIPER OR CYLINDER BORE SIZE	MERITOR CALIPER OR WHEEL CYLINDER (LEFT)	MERITOR CALIPER OR WHEEL CYLINDER (RIGHT)	MERITOR CALIPER OR WHEEL CYLINDER REPAIR KIT	MERITOR CALIPER PISTON	MERITOR MASTER CYLINDER	MERITOR MASTER CYLINDER KIT	MERITOR BRAKE HOSE (LEFT)	MERITOR BRAKE HOSE (RIGHT)
									IVECO(Cont.)
									EURO TURBO 120A(Cont.)
R447202	15/16 "	R417089	R417089	N/A	NR	-	-	-	-
R447202	1-1/16 "	R417088	R417088	N/A	NR	-	-	-	-
R447202	15/16 "	R417089	R417089	N/A	NR	-	-	-	-
									EURO TURBO 15-14
N/A		N/A	N/A	N/A	N/A	-	-	-	-
R447202		N/A	N/A	N/A	NR	-	-	-	-
N/A		N/A	N/A	N/A	N/A	-	-	-	-
R447202		N/A	N/A	N/A	NR	-	-	-	-
N/A		N/A	N/A	N/A	N/A	-	-	-	-
R447202		N/A	N/A	N/A	NR	-	-	-	-
									EURO TURBO 220
R447202	1 "	N/A	N/A	N/A	NR	-	-	-	-
R447202	1 "	N/A	N/A	N/A	NR	-	-	-	-
R447202	1 "	N/A	N/A	N/A	NR	-	-	-	-
R447202	1 "	N/A	N/A	N/A	NR	-	-	-	-
									EURO TURBO 230
R447202	15/16 "	R417089	R417089	N/A	NR	-	-	-	-
R447202	15/16 "	R417089	R417089	N/A	NR	-	-	-	-
									Z100
N/A	1-1/16 "	R417085	R417086[46]	N/A	NR	-	-	-	-
N/A	1-1/16 "	R417085	R417086[46]	N/A	NR	-	-	-	-
N/A	1-1/16 "	R417085	R417086[46]	N/A	NR	-	-	-	-
N/A	1-1/16 "	R417085	R417086[46]	N/A	NR	-	-	-	-
N/A	1-1/16 "	R417085	R417086[46]	N/A	NR	-	-	-	-
N/A	1-1/16 "	R417085	R417086[46]	N/A	NR	-	-	-	-
N/A	1-1/16 "	R417085	R417086[46]	N/A	NR	-	-	-	-
N/A	1-1/16 "	R417085	R417086[46]	N/A	NR	-	-	-	-
N/A	1-1/16 "	R417085	R417086[46]	N/A	NR	-	-	-	-
N/A	1-1/16 "	R417085	R417086[46]	N/A	NR	-	-	-	-
									Z110
N/A	1-1/16 "	R417085	R417086[46]	N/A	NR	-	-	-	-
N/A	1-1/16 "	R417085	R417086[46]	N/A	NR	-	-	-	-
N/A	1-1/16 "	R417085	R417086[46]	N/A	NR	-	-	-	-
N/A	1-1/16 "	R417085	R417086[46]	N/A	NR	-	-	-	-
N/A	1-1/16 "	R417085	R417086[46]	N/A	NR	-	-	-	-
N/A	1-1/16 "	R417085	R417086[46]	N/A	NR	-	-	-	-
N/A	1-1/16 "	R417085	R417086[46]	N/A	NR	-	-	-	-
N/A	1-1/16 "	R417085	R417086[46]	N/A	NR	-	-	-	-
N/A	1-1/16 "	R417085	R417086[46]	N/A	NR	-	-	-	-
									Z120TA
N/A	1-1/16 "	R417085	R417086[46]	N/A	NR	-	-	-	-

MAKE MODEL YEAR AXLE CODE AXLE WEIGHT	AXLE & BRK. TYPE	BRK. MFG.	BRAKE SIZE	FMSI	MERITOR DISC PAD OR BRAKE SHOE	MERITOR GUIDE PIN OR RETURN SPRING KIT	MERITOR CALIPER HWD. KIT OR RETURN SPRING KIT	MERITOR ADJUSTER KIT (LEFT WHEEL)	MERITOR ADJUSTER KIT (RIGHT WHEEL)
IVECO(Cont.)									
Z120TA(Cont.)									
1986	Ra		325mm x 100mm	1393	N/A	NR	R407104[348]	R407099	R407099[350]
1985	Fa		325mm x 100mm	1393	N/A	NR	R407104[348]	R407099	R407099[350]
	Ra		325mm x 100mm	1393	N/A	NR	R407104[348]	R407099	R407099[350]
1984	Fa		325mm x 100mm	1393	N/A	NR	R407104[348]	R407099	R407099[350]
	Ra		325mm x 100mm	1393	N/A	NR	R407104[348]	R407099	R407099[350]
1983	Fa		325mm x 100mm	1393	N/A	NR	R407104[348]	R407099	R407099[350]
	Ra		325mm x 100mm	1393	N/A	NR	R407104[348]	R407099	R407099[350]
1982	Fa		325mm x 100mm	1393	N/A	NR	R407104[348]	R407099	R407099[350]
	Ra		325mm x 100mm	1393	N/A	NR	R407104[348]	R407099	R407099[350]
Z200									
1985	Fm		325mm x 80mm	1361	N/A	N/A	N/A	N/A	N/A
	Rm		325mm x 80mm	1361	N/A	N/A	N/A	N/A	N/A
1984	Fm		325mm x 80mm	1361	N/A	N/A	N/A	N/A	N/A
	Rm		325mm x 80mm	1361	N/A	N/A	N/A	N/A	N/A
1983	Fm		325mm x 80mm	1361	N/A	N/A	N/A	N/A	N/A
	Rm		325mm x 80mm	1361	N/A	N/A	N/A	N/A	N/A
1982	Fm		325mm x 80mm	1361	N/A	N/A	N/A	N/A	N/A
	Rm		325mm x 80mm	1361	N/A	N/A	N/A	N/A	N/A
1981	Fm		325mm x 80mm	1361	N/A	N/A	N/A	N/A	N/A
	Rm		325mm x 80mm	1361	N/A	N/A	N/A	N/A	N/A
1980	Fm		325mm x 80mm	1361	N/A	N/A	N/A	N/A	N/A
	Rm		325mm x 80mm	1361	N/A	N/A	N/A	N/A	N/A
Z220									
1986	Fa		325mm x 100mm	1393	N/A	NR	R407104[348]	R407099	R407099[350]
	Ra		325mm x 100mm	1393	N/A	NR	R407104[348]	R407099	R407099[350]
1985	Fa		325mm x 100mm	1393	N/A	NR	R407104[348]	R407099	R407099[350]
	Ra		325mm x 100mm	1393	N/A	NR	R407104[348]	R407099	R407099[350]
1984	Fa		325mm x 100mm	1393	N/A	NR	R407104[348]	R407099	R407099[350]
	Ra		325mm x 100mm	1393	N/A	NR	R407104[348]	R407099	R407099[350]
1983	Fa		325mm x 100mm	1393	N/A	NR	R407104[348]	R407099	R407099[350]
	Ra		325mm x 100mm	1393	N/A	NR	R407104[348]	R407099	R407099[350]
1982	Fa		325mm x 100mm	1393	N/A	NR	R407104[348]	R407099	R407099[350]
	Ra		325mm x 100mm	1393	N/A	NR	R407104[348]	R407099	R407099[350]
Z220T									
1986	Fa		325mm x 100mm	1393	N/A	NR	R407104[348]	R407099	R407099[350]
	Ra		325mm x 100mm	1393	N/A	NR	R407104[348]	R407099	R407099[350]
1985	Fa		325mm x 100mm	1393	N/A	NR	R407104[348]	R407099	R407099[350]
	Ra		325mm x 100mm	1393	N/A	NR	R407104[348]	R407099	R407099[350]
1984	Fa		325mm x 100mm	1393	N/A	NR	R407104[348]	R407099	R407099[350]
	Ra		325mm x 100mm	1393	N/A	NR	R407104[348]	R407099	R407099[350]
1983	Fa		325mm x 100mm	1393	N/A	NR	R407104[348]	R407099	R407099[350]
	Ra		325mm x 100mm	1393	N/A	NR	R407104[348]	R407099	R407099[350]

46 - R417086 Has 15/16" Bore Size

348 - Return Springs Also Included in E407104

350 - 33 Tooth Adjuster

MERITOR DRUM OR ROTOR NO.	CALIPER OR CYLINDER BORE SIZE	MERITOR CALIPER OR WHEEL CYLINDER (LEFT)	MERITOR CALIPER OR WHEEL CYLINDER (RIGHT)	MERITOR CALIPER OR WHEEL CYLINDER REPAIR KIT	MERITOR CALIPER PISTON	MERITOR MASTER CYLINDER	MERITOR MASTER CYLINDER KIT	MERITOR BRAKE HOSE (LEFT)	MERITOR BRAKE HOSE (RIGHT)
									IVECO(Cont.)
									Z120TA(Cont.)
N/A	1-1/16 "	R417085	R417086[46]	N/A	NR	-	-	-	-
N/A	1-1/16 "	R417085	R417086[46]	N/A	NR	-	-	-	-
N/A	1-1/16 "	R417085	R417086[46]	N/A	NR	-	-	-	-
N/A	1-1/16 "	R417085	R417086[46]	N/A	NR	-	-	-	-
N/A	1-1/16 "	R417085	R417086[46]	N/A	NR	-	-	-	-
N/A	1-1/16 "	R417085	R417086[46]	N/A	NR	-	-	-	-
N/A	1-1/16 "	R417085	R417086[46]	N/A	NR	-	-	-	-
N/A	1-1/16 "	R417085	R417086[46]	N/A	NR	-	-	-	-
									Z200
N/A	1-1/16 "	R417085	R417086[46]	N/A	NR	-	-	-	-
N/A	1-1/16 "	R417085	R417086[46]	N/A	NR	-	-	-	-
N/A	1-1/16 "	R417085	R417086[46]	N/A	NR	-	-	-	-
N/A	1-1/16 "	R417085	R417086[46]	N/A	NR	-	-	-	-
N/A	1-1/16 "	R417085	R417086[46]	N/A	NR	-	-	-	-
N/A	1-1/16 "	R417085	R417086[46]	N/A	NR	-	-	-	-
N/A	1-1/16 "	R417085	R417086[46]	N/A	NR	-	-	-	-
N/A	1-1/16 "	R417085	R417086[46]	N/A	NR	-	-	-	-
N/A	1-1/16 "	R417085	R417086[46]	N/A	NR	-	-	-	-
N/A	1-1/16 "	R417085	R417086[46]	N/A	NR	-	-	-	-
									Z220
N/A	1 "	R417087	R417087	N/A	NR	-	-	-	-
N/A	1 "	R417087	R417087	N/A	NR	-	-	-	-
N/A	1 "	R417087	R417087	N/A	NR	-	-	-	-
N/A	1 "	R417087	R417087	N/A	NR	-	-	-	-
N/A	1 "	R417087	R417087	N/A	NR	-	-	-	-
N/A	1 "	R417087	R417087	N/A	NR	-	-	-	-
N/A	1 "	R417087	R417087	N/A	NR	-	-	-	-
N/A	1 "	R417087	R417087	N/A	NR	-	-	-	-
									Z220T
N/A	1 "	R417087	R417087	N/A	NR	-	-	-	-
N/A	1 "	R417087	R417087	N/A	NR	-	-	-	-
N/A	1 "	R417087	R417087	N/A	NR	-	-	-	-
N/A	1 "	R417087	R417087	N/A	NR	-	-	-	-
N/A	1 "	R417087	R417087	N/A	NR	-	-	-	-
N/A	1 "	R417087	R417087	N/A	NR	-	-	-	-
N/A	1 "	R417087	R417087	N/A	NR	-	-	-	-
N/A	1 "	R417087	R417087	N/A	NR	-	-	-	-

MAKE MODEL YEAR AXLE CODE AXLE WEIGHT	AXLE & BRK. TYPE	BRK. MFG.	BRAKE SIZE	FMSI	MERITOR DISC PAD OR BRAKE SHOE	MERITOR GUIDE PIN OR RETURN SPRING KIT	MERITOR CALIPER HWD. KIT OR RETURN SPRING KIT	MERITOR ADJUSTER KIT (LEFT WHEEL)	MERITOR ADJUSTER KIT (RIGHT WHEEL)
IVECO(Cont.)									
Z220T(Cont.)									
1982									
	Fa		325mm x 100mm	1393	N/A	NR	R407104[348]	R407099	R407099[350]
	Ra		325mm x 100mm	1393	N/A	NR	R407104[348]	R407099	R407099[350]
Z230T									
1986									
	Fa		325mm x 120mm	1488	N/A	NR	R407105[347]	R407099	R407099
	Ra		325mm x 120mm	1488	N/A	NR	R407105[347]	R407099	R407099
1985									
	Fa		325mm x 120mm	1488	N/A	NR	R407105[347]	R407099	R407099
	Ra		325mm x 120mm	1488	N/A	NR	R407105[347]	R407099	R407099
1984									
	Fa		325mm x 120mm	1488	N/A	NR	R407105[347]	R407099	R407099
	Ra		325mm x 120mm	1488	N/A	NR	R407105[347]	R407099	R407099
1983									
	Fa		325mm x 120mm	1488	N/A	NR	R407105[347]	R407099	R407099
	Ra		325mm x 120mm	1488	N/A	NR	R407105[347]	R407099	R407099
MACK									
CS200									
1995									
	Fd	BX		7142 - D225	MD225	R40H5010	R40H5522	NR	NR
1994									
	Fd	BX		7142 - D225	MD225	R40H5010	R40H5522	NR	NR
1993									
	Fd	BX		7142 - D225	MD225	R40H5010	R40H5522	NR	NR
1992									
	Fd	BX		7142 - D225	MD225	R40H5010	R40H5522	NR	NR
1991									
	Fd	BX		7142 - D225	MD225	R40H5010	R40H5522	NR	NR
1990									
	Fd	BX		7142 - D225	MD225	R40H5010	R40H5522	NR	NR
1989									
	Fd	BX		7142 - D225	MD225	R40H5010	R40H5522	NR	NR
1988									
	Fd	BX		7142 - D225	MD225	R40H5010	R40H5522	NR	NR
1987									
	Fa		15-1/2 " x 5 "	1356	R46700021	R407048	R407049[349]	NR	NR
	Fa		15-1/2 " x 5 "	1356	R46700021	R407048	R407049[349]	NR	NR
	Fa		15-1/2 " x 5 "	1356	R46700021	R407048	R407049[349]	NR	NR
	Fa		15-1/2 " x 5 "	1356	R46700021	R407048	R407049[349]	NR	NR
	Ra		15-1/2 " x 6 "	1357	-	R407048	R407049[349]	NR	NR
	Ra		15-1/2 " x 6 "	1357	-	R407048	R407049[349]	NR	NR
1986									
	Fa		15-1/2 " x 5 "	1356	R46700021	R407048	R407049[349]	NR	NR
	Fa		15-1/2 " x 5 "	1356	R46700021	R407048	R407049[349]	NR	NR
	Fa		15-1/2 " x 5 "	1356	R46700021	R407048	R407049[349]	NR	NR
	Fa		15-1/2 " x 5 "	1356	R46700021	R407048	R407049[349]	NR	NR
	Ra		15-1/2 " x 6 "	1357	-	R407048	R407049[349]	NR	NR
	Ra		15-1/2 " x 6 "	1357	-	R407048	R407049[349]	NR	NR
1985									
	Fa		15-1/2 " x 5 "	1356	R46700021	R407048	R407049[349]	NR	NR
	Fa		15-1/2 " x 5 "	1356	R46700021	R407048	R407049[349]	NR	NR
	Fa		15-1/2 " x 5 "	1356	R46700021	R407048	R407049[349]	NR	NR
	Fa		15-1/2 " x 5 "	1356	R46700021	R407048	R407049[349]	NR	NR
	Ra		15-1/2 " x 6 "	1357	-	R407048	R407049[349]	NR	NR
	Ra		15-1/2 " x 6 "	1357	-	R407048	R407049[349]	NR	NR
1984									
	Fa		15-1/2 " x 5 "	1356	R46700021	R407048	R407049[349]	NR	NR
	Fa		15-1/2 " x 5 "	1356	R46700021	R407048	R407049[349]	NR	NR
	Fa		15-1/2 " x 5 "	1356	R46700021	R407048	R407049[349]	NR	NR
	Fa		15-1/2 " x 5 "	1356	R46700021	R407048	R407049[349]	NR	NR
	Ra		15-1/2 " x 6 "	1357	-	R407048	R407049[349]	NR	NR
	Ra		15-1/2 " x 6 "	1357	-	R407048	R407049[349]	NR	NR

186 - 10 Stud
347 - Return Springs Also Included in R407105
348 - Return Springs Also Included in E407104
349 - Contains Adjuster
350 - 33 Tooth Adjuster

MERITOR DRUM OR ROTOR NO.	CALIPER OR CYLINDER BORE SIZE	MERITOR CALIPER OR WHEEL CYLINDER (LEFT)	MERITOR CALIPER OR WHEEL CYLINDER (RIGHT)	MERITOR CALIPER OR WHEEL CYLINDER REPAIR KIT	MERITOR CALIPER PISTON	MERITOR MASTER CYLINDER	MERITOR MASTER CYLINDER KIT	MERITOR BRAKE HOSE (LEFT)	MERITOR BRAKE HOSE (RIGHT)
									IVECO(Cont.)
									Z220T(Cont.)
N/A	1 "	R417087	R417087	N/A	NR	-	-	-	-
N/A	1 "	R417087	R417087	N/A	NR	-	-	-	-
									Z230T
R447202	1-1/16 "	R417088	R417088	N/A	NR	-	-	-	-
R447202	15/16 "	R417089	R417089	N/A	NR	-	-	-	-
R447202	1-1/16 "	R417088	R417088	N/A	NR	-	-	-	-
R447202	15/16 "	R417089	R417089	N/A	NR	-	-	-	-
R447202	1-1/16 "	R417088	R417088	N/A	NR	-	-	-	-
R447202	15/16 "	R417089	R417089	N/A	NR	-	-	-	-
R447202	1-1/16 "	R417088	R417088	N/A	NR	-	-	-	-
R447202	15/16 "	R417089	R417089	N/A	NR	-	-	-	-
									MACK
									CS200
R447210[186]	2-7/8 "	R42R55250	R42R55250	R4066365	R4090096	-	-	-	-
R447210[186]	2-7/8 "	R42R55250	R42R55250	R4066365	R4090096	-	-	-	-
R447210[186]	2-7/8 "	R42R55250	R42R55250	R4066365	R4090096	-	-	-	-
R447210[186]	2-7/8 "	R42R55250	R42R55250	R4066365	R4090096	-	-	-	-
R447210[186]	2-7/8 "	R42R55250	R42R55250	R4066365	R4090096	-	-	-	-
R447210[186]	2-7/8 "	R42R55250	R42R55250	R4066365	R4090096	-	-	-	-
R447210[186]	2-7/8 "	R42R55250	R42R55250	R4066365	R4090096	-	-	-	-
R447194	1-1/2 "	R 417050	R 417052	R417067	NR	-	-	-	-
R447194	1-1/2 "	R 417051	R 417053	R417067	NR	-	-	-	-
R447194	1-3/4 "	R417054	R417056	R417068	NR	-	-	-	-
R447194	1-1/2 "	R417055	R417057	R417068	NR	-	-	-	-
R447195	1-3/4 "	R417058	R417059	R417069	NR	-	-	-	-
R447195	1-3/4 "	R417054	R417056	R417068	NR	-	-	-	-
R447194	1-3/4 "	R417054	R417056	R417068	NR	-	-	-	-
R447194	1-1/2 "	R 417050	R 417052	R417067	NR	-	-	-	-
R447194	1-1/2 "	R417055	R417057	R417068	NR	-	-	-	-
R447194	1-1/2 "	R 417051	R 417053	R417067	NR	-	-	-	-
R447195	1-3/4 "	R417058	R417059	R417069	NR	-	-	-	-
R447195	1-3/4 "	R417054	R417056	R417068	NR	-	-	-	-
R447194	1-1/2 "	R417055	R417057	R417068	NR	-	-	-	-
R447194	1-1/2 "	R 417051	R 417053	R417067	NR	-	-	-	-
R447194	1-1/2 "	R 417050	R 417052	R417067	NR	-	-	-	-
R447194	1-3/4 "	R417054	R417056	R417068	NR	-	-	-	-
R447195	1-3/4 "	R417054	R417056	R417068	NR	-	-	-	-
R447195	1-3/4 "	R417058	R417059	R417069	NR	-	-	-	-
R447194	1-1/2 "	R 417050	R 417052	R417067	NR	-	-	-	-
R447194	1-3/4 "	R417054	R417056	R417068	NR	-	-	-	-
R447194	1-1/2 "	R 417051	R 417053	R417067	NR	-	-	-	-
R447194	1-1/2 "	R417055	R417057	R417068	NR	-	-	-	-
R447195	1-3/4 "	R417058	R417059	R417069	NR	-	-	-	-
R447195	1-3/4 "	R417054	R417056	R417068	NR	-	-	-	-

MAKE MODEL YEAR AXLE CODE AXLE WEIGHT	AXLE & BRK. TYPE	BRK. MFG.	BRAKE SIZE	FMSI	MERITOR DISC PAD OR BRAKE SHOE	MERITOR GUIDE PIN OR RETURN SPRING KIT	MERITOR CALIPER HWD. KIT OR RETURN SPRING KIT	MERITOR ADJUSTER KIT (LEFT WHEEL)	MERITOR ADJUSTER KIT (RIGHT WHEEL)
MACK(Cont.)									
CS200(Cont.)									
1983									
	Fa		15-1/2 " x 5 "	1356	R46700021	R407048	R407049[349]	NR	NR
	Fa		15-1/2 " x 5 "	1356	R46700021	R407048	R407049[349]	NR	NR
	Fa		15-1/2 " x 5 "	1356	R46700021	R407048	R407049[349]	NR	NR
	Fa		15-1/2 " x 5 "	1356	R46700021	R407048	R407049[349]	NR	NR
	Ra		15-1/2 " x 6 "	1357	-	R407048	R407049[349]	NR	NR
	Ra		15-1/2 " x 6 "	1357	-	R407048	R407049[349]	NR	NR
1982									
	Fa		15-1/2 " x 5 "	1356	R46700021	R407048	R407049[349]	NR	NR
	Fa		15-1/2 " x 5 "	1356	R46700021	R407048	R407049[349]	NR	NR
	Fa		15-1/2 " x 5 "	1356	R46700021	R407048	R407049[349]	NR	NR
	Fa		15-1/2 " x 5 "	1356	R46700021	R407048	R407049[349]	NR	NR
	Ra		15-1/2 " x 6 "	1357	-	R407048	R407049[349]	NR	NR
	Ra		15-1/2 " x 6 "	1357	-	R407048	R407049[349]	NR	NR
1981									
	Fa		15-1/2 " x 5 "	1356	R46700021	R407048	R407049[349]	NR	NR
	Fa		15-1/2 " x 5 "	1356	R46700021	R407048	R407049[349]	NR	NR
	Fa		15-1/2 " x 5 "	1356	R46700021	R407048	R407049[349]	NR	NR
	Fa		15-1/2 " x 5 "	1356	R46700021	R407048	R407049[349]	NR	NR
	Ra		15-1/2 " x 6 "	1357	-	R407048	R407049[349]	NR	NR
	Ra		15-1/2 " x 6 "	1357	-	R407048	R407049[349]	NR	NR
1980									
	Fa		15-1/2 " x 5 "	1356	R46700021	R407048	R407049[349]	NR	NR
	Fa		15-1/2 " x 5 "	1356	R46700021	R407048	R407049[349]	NR	NR
	Fa		15-1/2 " x 5 "	1356	R46700021	R407048	R407049[349]	NR	NR
	Fa		15-1/2 " x 5 "	1356	R46700021	R407048	R407049[349]	NR	NR
	Ra		15-1/2 " x 6 "	1357	-	R407048	R407049[349]	NR	NR
	Ra		15-1/2 " x 6 "	1357	-	R407048	R407049[349]	NR	NR
1979									
	Fa		15-1/2 " x 5 "	1356	R46700021	R407048	R407049[349]	NR	NR
	Fa		15-1/2 " x 5 "	1356	R46700021	R407048	R407049[349]	NR	NR
	Fa		15-1/2 " x 5 "	1356	R46700021	R407048	R407049[349]	NR	NR
	Fa		15-1/2 " x 5 "	1356	R46700021	R407048	R407049[349]	NR	NR
	Ra		15-1/2 " x 6 "	1357	-	R407048	R407049[349]	NR	NR
	Ra		15-1/2 " x 6 "	1357	-	R407048	R407049[349]	NR	NR
MS200									
1995									
	Fd	BX		7142 - D225	MD225	R40H5010	R40H5522	NR	NR
1994									
	Fd	BX		7142 - D225	MD225	R40H5010	R40H5522	NR	NR
1993									
	Fd	BX		7142 - D225	MD225	R40H5010	R40H5522	NR	NR
1992									
	Fd	BX		7142 - D225	MD225	R40H5010	R40H5522	NR	NR
1991									
	Fd	BX		7142 - D225	MD225	R40H5010	R40H5522	NR	NR
1990									
	Fd	BX		7142 - D225	MD225	R40H5010	R40H5522	NR	NR
1989									
	Fd	BX		7142 - D225	MD225	R40H5010	R40H5522	NR	NR
1988									
	Fd	BX		7142 - D225	MD225	R40H5010	R40H5522	NR	NR
1987									
	Fa		15-1/2 " x 5 "	1356	R46700021	R407048	R407049[349]	NR	NR
	Fa		15-1/2 " x 5 "	1356	R46700021	R407048	R407049[349]	NR	NR
	Fa		15-1/2 " x 5 "	1356	R46700021	R407048	R407049[349]	NR	NR
	Fa		15-1/2 " x 5 "	1356	R46700021	R407048	R407049[349]	NR	NR
	Ra		15-1/2 " x 6 "	1357	-	R407048	R407049[349]	NR	NR
	Ra		15-1/2 " x 6 "	1357	-	R407048	R407049[349]	NR	NR
1986									
	Fa		15-1/2 " x 5 "	1356	R46700021	R407048	R407049[349]	NR	NR
	Fa		15-1/2 " x 5 "	1356	R46700021	R407048	R407049[349]	NR	NR
	Fa		15-1/2 " x 5 "	1356	R46700021	R407048	R407049[349]	NR	NR
	Fa		15-1/2 " x 5 "	1356	R46700021	R407048	R407049[349]	NR	NR

186 - 10 Stud

349 - Contains Adjuster

MERITOR DRUM OR ROTOR NO.	CALIPER OR CYLINDER BORE SIZE	MERITOR CALIPER OR WHEEL CYLINDER (LEFT)	MERITOR CALIPER OR WHEEL CYLINDER (RIGHT)	MERITOR CALIPER OR WHEEL CYLINDER REPAIR KIT	MERITOR CALIPER PISTON	MERITOR MASTER CYLINDER	MERITOR MASTER CYLINDER KIT	MERITOR BRAKE HOSE (LEFT)	MERITOR BRAKE HOSE (RIGHT)
									MACK(Cont.)
									CS200(Cont.)
R447194	1-1/2 "	R 417051	R 417053	R417067	NR	-	-	-	-
R447194	1-1/2 "	R 417050	R 417052	R417067	NR	-	-	-	-
R447194	1-1/2 "	R417055	R417057	R417068	NR	-	-	-	-
R447194	1-3/4 "	R417054	R417056	R417068	NR	-	-	-	-
R447195	1-3/4 "	R417054	R417056	R417068	NR	-	-	-	-
R447195	1-3/4 "	R417058	R417059	R417069	NR	-	-	-	-
R447194	1-1/2 "	R417055	R417057	R417068	NR	-	-	-	-
R447194	1-1/2 "	R 417051	R 417053	R417067	NR	-	-	-	-
R447194	1-3/4 "	R417054	R417056	R417068	NR	-	-	-	-
R447194	1-1/2 "	R 417050	R 417052	R417067	NR	-	-	-	-
R447195	1-3/4 "	R417054	R417056	R417068	NR	-	-	-	-
R447195	1-3/4 "	R417058	R417059	R417069	NR	-	-	-	-
R447194	1-1/2 "	R 417051	R 417053	R417067	NR	-	-	-	-
R447194	1-1/2 "	R 417050	R 417052	R417067	NR	-	-	-	-
R447194	1-1/2 "	R417055	R417057	R417068	NR	-	-	-	-
R447194	1-3/4 "	R417054	R417056	R417068	NR	-	-	-	-
R447195	1-3/4 "	R417058	R417059	R417069	NR	-	-	-	-
R447195	1-3/4 "	R417054	R417056	R417068	NR	-	-	-	-
R447194	1-3/4 "	R417054	R417056	R417068	NR	-	-	-	-
R447194	1-1/2 "	R 417051	R 417053	R417067	NR	-	-	-	-
R447194	1-1/2 "	R 417050	R 417052	R417067	NR	-	-	-	-
R447194	1-1/2 "	R417055	R417057	R417068	NR	-	-	-	-
R447195	1-3/4 "	R417058	R417059	R417069	NR	-	-	-	-
R447195	1-3/4 "	R417054	R417056	R417068	NR	-	-	-	-
R447194	1-1/2 "	R 417050	R 417052	R417067	NR	-	-	-	-
R447194	1-1/2 "	R417055	R417057	R417068	NR	-	-	-	-
R447194	1-3/4 "	R417054	R417056	R417068	NR	-	-	-	-
R447194	1-1/2 "	R 417051	R 417053	R417067	NR	-	-	-	-
R447195	1-3/4 "	R417058	R417059	R417069	NR	-	-	-	-
R447195	1-3/4 "	R417054	R417056	R417068	NR	-	-	-	-
									MS200
R447210[186]	2-7/8 "	R42R55250	R42R55250	R4066365	R4090096	-	-	-	-
R447210[186]	2-7/8 "	R42R55250	R42R55250	R4066365	R4090096	-	-	-	-
R447210[186]	2-7/8 "	R42R55250	R42R55250	R4066365	R4090096	-	-	-	-
R447210[186]	2-7/8 "	R42R55250	R42R55250	R4066365	R4090096	-	-	-	-
R447210[186]	2-7/8 "	R42R55250	R42R55250	R4066365	R4090096	-	-	-	-
R447210[186]	2-7/8 "	R42R55250	R42R55250	R4066365	R4090096	-	-	-	-
R447210[186]	2-7/8 "	R42R55250	R42R55250	R4066365	R4090096	-	-	-	-
R447210[186]	2-7/8 "	R42R55250	R42R55250	R4066365	R4090096	-	-	-	-
R447194	1-1/2 "	R 417050	R 417052	R417067	NR	-	-	-	-
R447194	1-1/2 "	R417055	R417057	R417068	NR	-	-	-	-
R447194	1-1/2 "	R 417051	R 417053	R417067	NR	-	-	-	-
R447194	1-3/4 "	R417054	R417056	R417068	NR	-	-	-	-
R447195	1-3/4 "	R417054	R417056	R417068	NR	-	-	-	-
R447195	1-3/4 "	R417058	R417059	R417069	NR	-	-	-	-
R447194	1-1/2 "	R 417051	R 417053	R417067	NR	-	-	-	-
R447194	1-1/2 "	R 417050	R 417052	R417067	NR	-	-	-	-
R447194	1-1/2 "	R417055	R417057	R417068	NR	-	-	-	-
R447194	1-3/4 "	R417054	R417056	R417068	NR	-	-	-	-

MAKE MODEL YEAR AXLE CODE AXLE WEIGHT	AXLE & BRK. TYPE	BRK. MFG.	BRAKE SIZE	FMSI	MERITOR DISC PAD OR BRAKE SHOE	MERITOR GUIDE PIN OR RETURN SPRING KIT	MERITOR CALIPER HWD. KIT OR RETURN SPRING KIT	MERITOR ADJUSTER KIT (LEFT WHEEL)	MERITOR ADJUSTER KIT (RIGHT WHEEL)
MACK(Cont.)									
MS200(Cont.)									
1986									
	Ra		15-1/2 " x 6 "	1357	-	R407048	R407049[349]	NR	NR
	Ra		15-1/2 " x 6 "	1357	-	R407048	R407049[349]	NR	NR
1985									
	Fa		15-1/2 " x 5 "	1356	R46700021	R407048	R407049[349]	NR	NR
	Fa		15-1/2 " x 5 "	1356	R46700021	R407048	R407049[349]	NR	NR
	Fa		15-1/2 " x 5 "	1356	R46700021	R407048	R407049[349]	NR	NR
	Fa		15-1/2 " x 5 "	1356	R46700021	R407048	R407049[349]	NR	NR
	Ra		15-1/2 " x 6 "	1357	-	R407048	R407049[349]	NR	NR
	Ra		15-1/2 " x 6 "	1357	-	R407048	R407049[349]	NR	NR
1984									
	Fa		15-1/2 " x 5 "	1356	R46700021	R407048	R407049[349]	NR	NR
	Fa		15-1/2 " x 5 "	1356	R46700021	R407048	R407049[349]	NR	NR
	Fa		15-1/2 " x 5 "	1356	R46700021	R407048	R407049[349]	NR	NR
	Fa		15-1/2 " x 5 "	1356	R46700021	R407048	R407049[349]	NR	NR
	Ra		15-1/2 " x 6 "	1357	-	R407048	R407049[349]	NR	NR
	Ra		15-1/2 " x 6 "	1357	-	R407048	R407049[349]	NR	NR
1983									
	Fa		15-1/2 " x 5 "	1356	R46700021	R407048	R407049[349]	NR	NR
	Fa		15-1/2 " x 5 "	1356	R46700021	R407048	R407049[349]	NR	NR
	Fa		15-1/2 " x 5 "	1356	R46700021	R407048	R407049[349]	NR	NR
	Fa		15-1/2 " x 5 "	1356	R46700021	R407048	R407049[349]	NR	NR
	Ra		15-1/2 " x 6 "	1357	-	R407048	R407049[349]	NR	NR
	Ra		15-1/2 " x 6 "	1357	-	R407048	R407049[349]	NR	NR
1982									
	Fa		15-1/2 " x 5 "	1356	R46700021	R407048	R407049[349]	NR	NR
	Fa		15-1/2 " x 5 "	1356	R46700021	R407048	R407049[349]	NR	NR
	Fa		15-1/2 " x 5 "	1356	R46700021	R407048	R407049[349]	NR	NR
	Fa		15-1/2 " x 5 "	1356	R46700021	R407048	R407049[349]	NR	NR
	Ra		15-1/2 " x 6 "	1357	-	R407048	R407049[349]	NR	NR
	Ra		15-1/2 " x 6 "	1357	-	R407048	R407049[349]	NR	NR
1981									
	Fa		15-1/2 " x 5 "	1356	R46700021	R407048	R407049[349]	NR	NR
	Fa		15-1/2 " x 5 "	1356	R46700021	R407048	R407049[349]	NR	NR
	Fa		15-1/2 " x 5 "	1356	R46700021	R407048	R407049[349]	NR	NR
	Fa		15-1/2 " x 5 "	1356	R46700021	R407048	R407049[349]	NR	NR
	Ra		15-1/2 " x 6 "	1357	-	R407048	R407049[349]	NR	NR
	Ra		15-1/2 " x 6 "	1357	-	R407048	R407049[349]	NR	NR
1980									
	Fa		15-1/2 " x 5 "	1356	R46700021	R407048	R407049[349]	NR	NR
	Fa		15-1/2 " x 5 "	1356	R46700021	R407048	R407049[349]	NR	NR
	Fa		15-1/2 " x 5 "	1356	R46700021	R407048	R407049[349]	NR	NR
	Fa		15-1/2 " x 5 "	1356	R46700021	R407048	R407049[349]	NR	NR
	Ra		15-1/2 " x 6 "	1357	-	R407048	R407049[349]	NR	NR
	Ra		15-1/2 " x 6 "	1357	-	R407048	R407049[349]	NR	NR
1979									
	Fa		15-1/2 " x 5 "	1356	R46700021	R407048	R407049[349]	NR	NR
	Fa		15-1/2 " x 5 "	1356	R46700021	R407048	R407049[349]	NR	NR
	Fa		15-1/2 " x 5 "	1356	R46700021	R407048	R407049[349]	NR	NR
	Fa		15-1/2 " x 5 "	1356	R46700021	R407048	R407049[349]	NR	NR
	Ra		15-1/2 " x 6 "	1357	-	R407048	R407049[349]	NR	NR
	Ra		15-1/2 " x 6 "	1357	-	R407048	R407049[349]	NR	NR
MS300									
1984									
	Fa		15-1/2 " x 5 "	1356	R46700021	R407048	R407049[349]	NR	NR
	Fa		15-1/2 " x 5 "	1356	R46700021	R407048	R407049[349]	NR	NR
	Fa		15-1/2 " x 5 "	1356	R46700021	R407048	R407049[349]	NR	NR
	Fa		15-1/2 " x 5 "	1356	R46700021	R407048	R407049[349]	NR	NR
	Ra		15-1/2 " x 6 "	1357	-	R407048	R407049[349]	NR	NR
	Ra		15-1/2 " x 6 "	1357	-	R407048	R407049[349]	NR	NR
1983									
	Fa		15-1/2 " x 5 "	1356	R46700021	R407048	R407049[349]	NR	NR
	Fa		15-1/2 " x 5 "	1356	R46700021	R407048	R407049[349]	NR	NR
	Fa		15-1/2 " x 5 "	1356	R46700021	R407048	R407049[349]	NR	NR

349 - Contains Adjuster

MERITOR DRUM OR ROTOR NO.	CALIPER OR CYLINDER BORE SIZE	MERITOR CALIPER OR WHEEL CYLINDER (LEFT)	MERITOR CALIPER OR WHEEL CYLINDER (RIGHT)	MERITOR CALIPER OR WHEEL CYLINDER REPAIR KIT	MERITOR CALIPER PISTON	MERITOR MASTER CYLINDER	MERITOR MASTER CYLINDER KIT	MERITOR BRAKE HOSE (LEFT)	MERITOR BRAKE HOSE (RIGHT)
									MACK(Cont.)
									MS200(Cont.)
R447195	1-3/4 "	R417054	R417056	R417068	NR	-	-	-	-
R447195	1-3/4 "	R417058	R417059	R417069	NR	-	-	-	-
R447194	1-1/2 "	R 417051	R 417053	R417067	NR	-	-	-	-
R447194	1-1/2 "	R417055	R417057	R417068	NR	-	-	-	-
R447194	1-3/4 "	R417054	R417056	R417068	NR	-	-	-	-
R447194	1-1/2 "	R 417050	R 417052	R417067	NR	-	-	-	-
R447195	1-3/4 "	R417058	R417059	R417069	NR	-	-	-	-
R447195	1-3/4 "	R417054	R417056	R417068	NR	-	-	-	-
R447194	1-1/2 "	R417055	R417057	R417068	NR	-	-	-	-
R447194	1-1/2 "	R 417051	R 417053	R417067	NR	-	-	-	-
R447194	1-3/4 "	R417054	R417056	R417068	NR	-	-	-	-
R447194	1-1/2 "	R 417050	R 417052	R417067	NR	-	-	-	-
R447195	1-3/4 "	R417054	R417056	R417068	NR	-	-	-	-
R447195	1-3/4 "	R417058	R417059	R417069	NR	-	-	-	-
R447194	1-3/4 "	R417054	R417056	R417068	NR	-	-	-	-
R447194	1-1/2 "	R 417051	R 417053	R417067	NR	-	-	-	-
R447194	1-1/2 "	R 417050	R 417052	R417067	NR	-	-	-	-
R447194	1-1/2 "	R417055	R417057	R417068	NR	-	-	-	-
R447195	1-3/4 "	R417058	R417059	R417069	NR	-	-	-	-
R447195	1-3/4 "	R417054	R417056	R417068	NR	-	-	-	-
R447194	1-3/4 "	R417054	R417056	R417068	NR	-	-	-	-
R447194	1-1/2 "	R417055	R417057	R417068	NR	-	-	-	-
R447194	1-1/2 "	R 417050	R 417052	R417067	NR	-	-	-	-
R447194	1-1/2 "	R 417051	R 417053	R417067	NR	-	-	-	-
R447195	1-3/4 "	R417058	R417059	R417069	NR	-	-	-	-
R447195	1-3/4 "	R417054	R417056	R417068	NR	-	-	-	-
R447194	1-1/2 "	R417055	R417057	R417068	NR	-	-	-	-
R447194	1-1/2 "	R 417050	R 417052	R417067	NR	-	-	-	-
R447194	1-1/2 "	R 417051	R 417053	R417067	NR	-	-	-	-
R447194	1-3/4 "	R417054	R417056	R417068	NR	-	-	-	-
R447195	1-3/4 "	R417054	R417056	R417068	NR	-	-	-	-
R447195	1-3/4 "	R417058	R417059	R417069	NR	-	-	-	-
R447194	1-1/2 "	R 417050	R 417052	R417067	NR	-	-	-	-
R447194	1-1/2 "	R417055	R417057	R417068	NR	-	-	-	-
R447194	1-1/2 "	R 417051	R 417053	R417067	NR	-	-	-	-
R447194	1-3/4 "	R417054	R417056	R417068	NR	-	-	-	-
R447195	1-3/4 "	R417054	R417056	R417068	NR	-	-	-	-
R447195	1-3/4 "	R417058	R417059	R417069	NR	-	-	-	-
R447194	1-3/4 "	R417054	R417056	R417068	NR	-	-	-	-
R447194	1-1/2 "	R 417051	R 417053	R417067	NR	-	-	-	-
R447194	1-1/2 "	R 417050	R 417052	R417067	NR	-	-	-	-
R447194	1-1/2 "	R417055	R417057	R417068	NR	-	-	-	-
R447195	1-3/4 "	R417058	R417059	R417069	NR	-	-	-	-
R447195	1-3/4 "	R417054	R417056	R417068	NR	-	-	-	-
									MS300
R447194	1-1/2 "	R 417050	R 417052	R417067	NR	-	-	-	-
R447194	1-1/2 "	R417055	R417057	R417068	NR	-	-	-	-
R447194	1-3/4 "	R417054	R417056	R417068	NR	-	-	-	-
R447194	1-1/2 "	R 417051	R 417053	R417067	NR	-	-	-	-
R447195	1-3/4 "	R417054	R417056	R417068	NR	-	-	-	-
R447195	1-3/4 "	R417058	R417059	R417069	NR	-	-	-	-
R447194	1-1/2 "	R417055	R417057	R417068	NR	-	-	-	-
R447194	1-1/2 "	R 417051	R 417053	R417067	NR	-	-	-	-
R447194	1-3/4 "	R417054	R417056	R417068	NR	-	-	-	-

MAKE MODEL YEAR AXLE CODE AXLE WEIGHT	AXLE & BRK. TYPE	BRK. MFG.	BRAKE SIZE	FMSI	MERITOR DISC PAD OR BRAKE SHOE	MERITOR GUIDE PIN OR RETURN SPRING KIT	MERITOR CALIPER HWD. KIT OR RETURN SPRING KIT	MERITOR ADJUSTER KIT (LEFT WHEEL)	MERITOR ADJUSTER KIT (RIGHT WHEEL)
MACK(Cont.)									
MS300(Cont.)									
1983									
	Fa		15-1/2 " x 5 "	1356	R46700021	R407048	R407049[349]	NR	NR
	Ra		15-1/2 " x 6 "	1357	-	R407048	R407049[349]	NR	NR
	Ra		15-1/2 " x 6 "	1357	-	R407048	R407049[349]	NR	NR
1982									
	Fa		15-1/2 " x 5 "	1356	R46700021	R407048	R407049[349]	NR	NR
	Fa		15-1/2 " x 5 "	1356	R46700021	R407048	R407049[349]	NR	NR
	Fa		15-1/2 " x 5 "	1356	R46700021	R407048	R407049[349]	NR	NR
	Fa		15-1/2 " x 5 "	1356	R46700021	R407048	R407049[349]	NR	NR
	Ra		15-1/2 " x 6 "	1357	-	R407048	R407049[349]	NR	NR
	Ra		15-1/2 " x 6 "	1357	-	R407048	R407049[349]	NR	NR
1981									
	Fa		15-1/2 " x 5 "	1356	R46700021	R407048	R407049[349]	NR	NR
	Fa		15-1/2 " x 5 "	1356	R46700021	R407048	R407049[349]	NR	NR
	Fa		15-1/2 " x 5 "	1356	R46700021	R407048	R407049[349]	NR	NR
	Fa		15-1/2 " x 5 "	1356	R46700021	R407048	R407049[349]	NR	NR
	Ra		15-1/2 " x 6 "	1357	-	R407048	R407049[349]	NR	NR
	Ra		15-1/2 " x 6 "	1357	-	R407048	R407049[349]	NR	NR
1980									
	Fa		15-1/2 " x 5 "	1356	R46700021	R407048	R407049[349]	NR	NR
	Fa		15-1/2 " x 5 "	1356	R46700021	R407048	R407049[349]	NR	NR
	Fa		15-1/2 " x 5 "	1356	R46700021	R407048	R407049[349]	NR	NR
	Fa		15-1/2 " x 5 "	1356	R46700021	R407048	R407049[349]	NR	NR
	Ra		15-1/2 " x 6 "	1357	-	R407048	R407049[349]	NR	NR
	Ra		15-1/2 " x 6 "	1357	-	R407048	R407049[349]	NR	NR
1979									
	Fa		15-1/2 " x 5 "	1356	R46700021	R407048	R407049[349]	NR	NR
	Fa		15-1/2 " x 5 "	1356	R46700021	R407048	R407049[349]	NR	NR
	Fa		15-1/2 " x 5 "	1356	R46700021	R407048	R407049[349]	NR	NR
	Fa		15-1/2 " x 5 "	1356	R46700021	R407048	R407049[349]	NR	NR
	Ra		15-1/2 " x 6 "	1357	-	R407048	R407049[349]	NR	NR
	Ra		15-1/2 " x 6 "	1357	-	R407048	R407049[349]	NR	NR
MAGIRUS									
160 A11FL									
1978									
	Fa		15-1/2 " x 5 "	1356	R46700021	R407048	R407049[349]	NR	NR
	Fa		15-1/2 " x 5 "	1356	R46700021	R407048	R407049[349]	NR	NR
	Fa		15-1/2 " x 5 "	1356	R46700021	R407048	R407049[349]	NR	NR
	Fa		15-1/2 " x 5 "	1356	R46700021	R407048	R407049[349]	NR	NR
	Ra		15-1/2 " x 6 "	1357	-	R407048	R407049[349]	NR	NR
	Ra		15-1/2 " x 6 "	1357	-	R407048	R407049[349]	NR	NR
1977									
	Fa		15-1/2 " x 5 "	1356	R46700021	R407048	R407049	NR	NR
	Fa		15-1/2 " x 5 "	1356	R46700021	R407048	R407049	NR	NR
	Fa		15-1/2 " x 5 "	1356	R46700021	R407048	R407049	NR	NR
	Fa		15-1/2 " x 5 "	1356	R46700021	R407048	R407049	NR	NR
	Ra		15-1/2 " x 6 "	1357	R46700121	R407048	R407049	NR	NR
	Ra		15-1/2 " x 6 "	1357	R46700121	R407048	R407049	NR	NR
160 A13FL									
1987									
	Fa		15-1/2 " x 5 "	1356	R46700021	R407048	R407049[349]	NR	NR
	Fa		15-1/2 " x 5 "	1356	R46700021	R407048	R407049[349]	NR	NR
	Fa		15-1/2 " x 5 "	1356	R46700021	R407048	R407049[349]	NR	NR
	Fa		15-1/2 " x 5 "	1356	R46700021	R407048	R407049[349]	NR	NR
	Ra		15-1/2 " x 6 "	1357	-	R407048	R407049[349]	NR	NR
	Ra		15-1/2 " x 6 "	1357	-	R407048	R407049[349]	NR	NR
1986									
	Fa		15-1/2 " x 5 "	1356	R46700021	R407048	R407049[349]	NR	NR
	Fa		15-1/2 " x 5 "	1356	R46700021	R407048	R407049[349]	NR	NR
	Fa		15-1/2 " x 5 "	1356	R46700021	R407048	R407049[349]	NR	NR
	Fa		15-1/2 " x 5 "	1356	R46700021	R407048	R407049[349]	NR	NR
	Fa		15-1/2 " x 5 "	1356	R46700021	R407048	R407049[349]	NR	NR
	Fa		15-1/2 " x 5 "	1356	R46700021	R407048	R407049[349]	NR	NR

349 - Contains Adjuster

MERITOR DRUM OR ROTOR NO.	CALIPER OR CYLINDER BORE SIZE	MERITOR CALIPER OR WHEEL CYLINDER (LEFT)	MERITOR CALIPER OR WHEEL CYLINDER (RIGHT)	MERITOR CALIPER OR WHEEL CYLINDER REPAIR KIT	MERITOR CALIPER PISTON	MERITOR MASTER CYLINDER	MERITOR MASTER CYLINDER KIT	MERITOR BRAKE HOSE (LEFT)	MERITOR BRAKE HOSE (RIGHT)
MACK(Cont.)									
MS300(Cont.)									
R447194	1-1/2 "	R 417050	R 417052	R417067	NR	-	-	-	-
R447195	1-3/4 "	R417058	R417059	R417069	NR	-	-	-	-
R447195	1-3/4 "	R417054	R417056	R417068	NR	-	-	-	-
R447194	1-1/2 "	R 417050	R 417052	R417067	NR	-	-	-	-
R447194	1-1/2 "	R 417051	R 417053	R417067	NR	-	-	-	-
R447194	1-1/2 "	R417055	R417057	R417068	NR	-	-	-	-
R447194	1-3/4 "	R417054	R417056	R417068	NR	-	-	-	-
R447195	1-3/4 "	R417054	R417056	R417068	NR	-	-	-	-
R447195	1-3/4 "	R417058	R417059	R417069	NR	-	-	-	-
R447194	1-1/2 "	R 417050	R 417052	R417067	NR	-	-	-	-
R447194	1-1/2 "	R 417051	R 417053	R417067	NR	-	-	-	-
R447194	1-3/4 "	R417054	R417056	R417068	NR	-	-	-	-
R447194	1-1/2 "	R417055	R417057	R417068	NR	-	-	-	-
R447195	1-3/4 "	R417058	R417059	R417069	NR	-	-	-	-
R447195	1-3/4 "	R417054	R417056	R417068	NR	-	-	-	-
R447194	1-1/2 "	R417055	R417057	R417068	NR	-	-	-	-
R447194	1-1/2 "	R 417050	R 417052	R417067	NR	-	-	-	-
R447194	1-3/4 "	R417054	R417056	R417068	NR	-	-	-	-
R447194	1-1/2 "	R 417051	R 417053	R417067	NR	-	-	-	-
R447195	1-3/4 "	R417054	R417056	R417068	NR	-	-	-	-
R447195	1-3/4 "	R417058	R417059	R417069	NR	-	-	-	-
R447194	1-1/2 "	R 417051	R 417053	R417067	NR	-	-	-	-
R447194	1-1/2 "	R417055	R417057	R417068	NR	-	-	-	-
R447194	1-3/4 "	R417054	R417056	R417068	NR	-	-	-	-
R447194	1-1/2 "	R 417050	R 417052	R417067	NR	-	-	-	-
R447195	1-3/4 "	R417054	R417056	R417068	NR	-	-	-	-
R447195	1-3/4 "	R417058	R417059	R417069	NR	-	-	-	-
MAGIRUS									
160 A11FL									
R447194	1-1/2 "	R 417050	R 417052	R417067	NR	-	-	-	-
R447194	1-1/2 "	R 417051	R 417053	R417067	NR	-	-	-	-
R447194	1-3/4 "	R417054	R417056	R417068	NR	-	-	-	-
R447194	1-1/2 "	R417055	R417057	R417068	NR	-	-	-	-
R447195	1-3/4 "	R417054	R417056	R417068	NR	-	-	-	-
R447195	1-3/4 "	R417058	R417059	R417069	NR	-	-	-	-
R447194	1-1/2 "	R 417050	R 417052	R417067	NR	-	-	-	-
R447194	1-1/2 "	R 417051	R 417053	R417067	NR	-	-	-	-
R447194	1-3/4 "	R417054	R417056	R417068	NR	-	-	-	-
R447194	1-1/2 "	R417055	R417057	R417068	NR	-	-	-	-
R447195	1-3/4 "	R417054	R417056	R417068	NR	-	-	-	-
R447195	1-3/4 "	R417058	R417059	R417069	NR	-	-	-	-
160 A13FL									
R447194	1-1/2 "	R 417050	R 417052	R417067	NR	-	-	-	-
R447194	1-1/2 "	R 417051	R 417053	R417067	NR	-	-	-	-
R447194	1-3/4 "	R417054	R417056	R417068	NR	-	-	-	-
R447194	1-1/2 "	R417055	R417057	R417068	NR	-	-	-	-
R447195	1-3/4 "	R417054	R417056	R417068	NR	-	-	-	-
R447195	1-3/4 "	R417058	R417059	R417069	NR	-	-	-	-
R447194	1-1/2 "	R 417050	R 417052	R417067	NR	-	-	-	-
R447194	1-1/2 "	R 417051	R 417053	R417067	NR	-	-	-	-
R447194	1-3/4 "	R417054	R417056	R417068	NR	-	-	-	-
R447194	1-1/2 "	R417055	R417057	R417068	NR	-	-	-	-
R447194	1-1/2 "	R 417050	R 417052	R417067	NR	-	-	-	-
R447194	1-1/2 "	R 417051	R 417053	R417067	NR	-	-	-	-

MAKE MODEL YEAR AXLE CODE AXLE WEIGHT	AXLE & BRK. TYPE	BRK. MFG.	BRAKE SIZE	FMSI	MERITOR DISC PAD OR BRAKE SHOE	MERITOR GUIDE PIN OR RETURN SPRING KIT	MERITOR CALIPER HWD. KIT OR RETURN SPRING KIT	MERITOR ADJUSTER KIT (LEFT WHEEL)	MERITOR ADJUSTER KIT (RIGHT WHEEL)
MAGIRUS(Cont.)									
160 A13FL(Cont.)									
1986									
	Fa		15-1/2 " x 5 "	1356	R46700021	R407048	R407049[349]	NR	NR
	Fa		15-1/2 " x 5 "	1356	R46700021	R407048	R407049[349]	NR	NR
	Ra		15-1/2 " x 6 "	1357	-	R407048	R407049[349]	NR	NR
	Ra		15-1/2 " x 6 "	1357	-	R407048	R407049[349]	NR	NR
1985									
	Fa		15-1/2 " x 5 "	1356	R46700021	R407048	R407049[349]	NR	NR
	Fa		15-1/2 " x 5 "	1356	R46700021	R407048	R407049[349]	NR	NR
	Fa		15-1/2 " x 5 "	1356	R46700021	R407048	R407049[349]	NR	NR
	Fa		15-1/2 " x 5 "	1356	R46700021	R407048	R407049[349]	NR	NR
	Fa		15-1/2 " x 5 "	1356	R46700021	R407048	R407049[349]	NR	NR
	Fa		15-1/2 " x 5 "	1356	R46700021	R407048	R407049[349]	NR	NR
	Fa		15-1/2 " x 5 "	1356	R46700021	R407048	R407049[349]	NR	NR
	Fa		15-1/2 " x 5 "	1356	R46700021	R407048	R407049[349]	NR	NR
	Ra		15-1/2 " x 6 "	1357	-	R407048	R407049[349]	NR	NR
	Ra		15-1/2 " x 6 "	1357	-	R407048	R407049[349]	NR	NR
1984									
	Fa		15-1/2 " x 5 "	1356	R46700021	R407048	R407049[349]	NR	NR
	Fa		15-1/2 " x 5 "	1356	R46700021	R407048	R407049[349]	NR	NR
	Fa		15-1/2 " x 5 "	1356	R46700021	R407048	R407049[349]	NR	NR
	Fa		15-1/2 " x 5 "	1356	R46700021	R407048	R407049[349]	NR	NR
	Fa		15-1/2 " x 5 "	1356	R46700021	R407048	R407049[349]	NR	NR
	Fa		15-1/2 " x 5 "	1356	R46700021	R407048	R407049[349]	NR	NR
	Fa		15-1/2 " x 5 "	1356	R46700021	R407048	R407049[349]	NR	NR
	Fa		15-1/2 " x 5 "	1356	R46700021	R407048	R407049[349]	NR	NR
	Fa		15-1/2 " x 5 "	1356	R46700021	R407048	R407049[349]	NR	NR
	Fa		15-1/2 " x 5 "	1356	R46700021	R407048	R407049[349]	NR	NR
	Fa		15-1/2 " x 5 "	1356	R46700021	R407048	R407049[349]	NR	NR
	Ra		15-1/2 " x 6 "	1357	-	R407048	R407049[349]	NR	NR
	Ra		15-1/2 " x 6 "	1357	-	R407048	R407049[349]	NR	NR
1983									
	Fa		15-1/2 " x 5 "	1356	R46700021	R407048	R407049[349]	NR	NR
	Fa		15-1/2 " x 5 "	1356	R46700021	R407048	R407049[349]	NR	NR
	Fa		15-1/2 " x 5 "	1356	R46700021	R407048	R407049[349]	NR	NR
	Fa		15-1/2 " x 5 "	1356	R46700021	R407048	R407049[349]	NR	NR
	Fa		15-1/2 " x 5 "	1356	R46700021	R407048	R407049[349]	NR	NR
	Fa		15-1/2 " x 5 "	1356	R46700021	R407048	R407049[349]	NR	NR
	Fa		15-1/2 " x 5 "	1356	R46700021	R407048	R407049[349]	NR	NR
	Fa		15-1/2 " x 5 "	1356	R46700021	R407048	R407049[349]	NR	NR
	Fa		15-1/2 " x 5 "	1356	R46700021	R407048	R407049[349]	NR	NR
	Fa		15-1/2 " x 5 "	1356	R46700021	R407048	R407049[349]	NR	NR
	Fa		15-1/2 " x 5 "	1356	R46700021	R407048	R407049[349]	NR	NR
	Ra		15-1/2 " x 6 "	1357	-	R407048	R407049[349]	NR	NR
	Ra		15-1/2 " x 6 "	1357	-	R407048	R407049[349]	NR	NR
1982									
	Fa		15-1/2 " x 5 "	1356	R46700021	R407048	R407049[349]	NR	NR
	Fa		15-1/2 " x 5 "	1356	R46700021	R407048	R407049[349]	NR	NR
	Fa		15-1/2 " x 5 "	1356	R46700021	R407048	R407049[349]	NR	NR
	Fa		15-1/2 " x 5 "	1356	R46700021	R407048	R407049[349]	NR	NR
	Fa		15-1/2 " x 5 "	1356	R46700021	R407048	R407049[349]	NR	NR
	Fa		15-1/2 " x 5 "	1356	R46700021	R407048	R407049[349]	NR	NR
	Fa		15-1/2 " x 5 "	1356	R46700021	R407048	R407049[349]	NR	NR
	Fa		15-1/2 " x 5 "	1356	R46700021	R407048	R407049[349]	NR	NR
	Fa		15-1/2 " x 5 "	1356	R46700021	R407048	R407049[349]	NR	NR
	Fa		15-1/2 " x 5 "	1356	R46700021	R407048	R407049[349]	NR	NR
	Fa		15-1/2 " x 5 "	1356	R46700021	R407048	R407049[349]	NR	NR
	Fa		15-1/2 " x 5 "	1356	R46700021	R407048	R407049[349]	NR	NR
	Ra		15-1/2 " x 6 "	1357	-	R407048	R407049[349]	NR	NR
	Ra		15-1/2 " x 6 "	1357	-	R407048	R407049[349]	NR	NR
1981									
	Fa		15-1/2 " x 5 "	1356	R46700021	R407048	R407049[349]	NR	NR
	Fa		15-1/2 " x 5 "	1356	R46700021	R407048	R407049[349]	NR	NR
	Fa		15-1/2 " x 5 "	1356	R46700021	R407048	R407049[349]	NR	NR

349 - Contains Adjuster

MERITOR DRUM OR ROTOR NO.	CALIPER OR CYLINDER BORE SIZE	MERITOR CALIPER OR WHEEL CYLINDER (LEFT)	MERITOR CALIPER OR WHEEL CYLINDER (RIGHT)	MERITOR CALIPER OR WHEEL CYLINDER REPAIR KIT	MERITOR CALIPER PISTON	MERITOR MASTER CYLINDER	MERITOR MASTER CYLINDER KIT	MERITOR BRAKE HOSE (LEFT)	MERITOR BRAKE HOSE (RIGHT)
									MAGIRUS(Cont.)
									160 A13FL(Cont.)
R447194	1-3/4 "	R417054	R417056	R417068	NR	-	-	-	-
R447194	1-1/2 "	R417055	R417057	R417068	NR	-	-	-	-
R447195	1-3/4 "	R417054	R417056	R417068	NR	-	-	-	-
R447195	1-3/4 "	R417058	R417059	R417069	NR	-	-	-	-
R447194	1-1/2 "	R 417050	R 417052	R417067	NR	-	-	-	-
R447194	1-1/2 "	R 417051	R 417053	R417067	NR	-	-	-	-
R447194	1-3/4 "	R417054	R417056	R417068	NR	-	-	-	-
R447194	1-1/2 "	R417055	R417057	R417068	NR	-	-	-	-
R447194	1-1/2 "	R 417050	R 417052	R417067	NR	-	-	-	-
R447194	1-1/2 "	R 417051	R 417053	R417067	NR	-	-	-	-
R447194	1-3/4 "	R417054	R417056	R417068	NR	-	-	-	-
R447194	1-1/2 "	R417055	R417057	R417068	NR	-	-	-	-
R447195	1-3/4 "	R417054	R417056	R417068	NR	-	-	-	-
R447195	1-3/4 "	R417058	R417059	R417069	NR	-	-	-	-
R447194	1-1/2 "	R 417050	R 417052	R417067	NR	-	-	-	-
R447194	1-1/2 "	R 417051	R 417053	R417067	NR	-	-	-	-
R447194	1-3/4 "	R417054	R417056	R417068	NR	-	-	-	-
R447194	1-1/2 "	R417055	R417057	R417068	NR	-	-	-	-
R447194	1-1/2 "	R 417050	R 417052	R417067	NR	-	-	-	-
R447194	1-1/2 "	R 417051	R 417053	R417067	NR	-	-	-	-
R447194	1-3/4 "	R417054	R417056	R417068	NR	-	-	-	-
R447194	1-1/2 "	R417055	R417057	R417068	NR	-	-	-	-
R447194	1-1/2 "	R 417050	R 417052	R417067	NR	-	-	-	-
R447194	1-1/2 "	R 417051	R 417053	R417067	NR	-	-	-	-
R447194	1-3/4 "	R417054	R417056	R417068	NR	-	-	-	-
R447194	1-1/2 "	R417055	R417057	R417068	NR	-	-	-	-
R447195	1-3/4 "	R417054	R417056	R417068	NR	-	-	-	-
R447195	1-3/4 "	R417058	R417059	R417069	NR	-	-	-	-
R447194	1-1/2 "	R 417050	R 417052	R417067	NR	-	-	-	-
R447194	1-1/2 "	R 417051	R 417053	R417067	NR	-	-	-	-
R447194	1-3/4 "	R417054	R417056	R417068	NR	-	-	-	-
R447194	1-1/2 "	R417055	R417057	R417068	NR	-	-	-	-
R447194	1-1/2 "	R 417050	R 417052	R417067	NR	-	-	-	-
R447194	1-1/2 "	R 417051	R 417053	R417067	NR	-	-	-	-
R447194	1-3/4 "	R417054	R417056	R417068	NR	-	-	-	-
R447194	1-1/2 "	R417055	R417057	R417068	NR	-	-	-	-
R447194	1-1/2 "	R 417050	R 417052	R417067	NR	-	-	-	-
R447194	1-1/2 "	R 417051	R 417053	R417067	NR	-	-	-	-
R447194	1-3/4 "	R417054	R417056	R417068	NR	-	-	-	-
R447194	1-1/2 "	R417055	R417057	R417068	NR	-	-	-	-
R447195	1-3/4 "	R417054	R417056	R417068	NR	-	-	-	-
R447195	1-3/4 "	R417058	R417059	R417069	NR	-	-	-	-
R447194	1-1/2 "	R 417050	R 417052	R417067	NR	-	-	-	-
R447194	1-1/2 "	R 417051	R 417053	R417067	NR	-	-	-	-
R447194	1-3/4 "	R417054	R417056	R417068	NR	-	-	-	-
R447194	1-1/2 "	R417055	R417057	R417068	NR	-	-	-	-
R447195	1-3/4 "	R417054	R417056	R417068	NR	-	-	-	-
R447195	1-3/4 "	R417058	R417059	R417069	NR	-	-	-	-
R447194	1-1/2 "	R 417050	R 417052	R417067	NR	-	-	-	-
R447194	1-1/2 "	R 417051	R 417053	R417067	NR	-	-	-	-
R447194	1-3/4 "	R417054	R417056	R417068	NR	-	-	-	-
R447194	1-1/2 "	R417055	R417057	R417068	NR	-	-	-	-
R447195	1-3/4 "	R417054	R417056	R417068	NR	-	-	-	-
R447195	1-3/4 "	R417058	R417059	R417069	NR	-	-	-	-
R447194	1-1/2 "	R 417050	R 417052	R417067	NR	-	-	-	-
R447194	1-1/2 "	R 417051	R 417053	R417067	NR	-	-	-	-
R447194	1-3/4 "	R417054	R417056	R417068	NR	-	-	-	-

MAKE MODEL YEAR AXLE CODE AXLE WEIGHT	AXLE & BRK. TYPE	BRK. MFG.	BRAKE SIZE	FMSI	MERITOR DISC PAD OR BRAKE SHOE	MERITOR GUIDE PIN OR RETURN SPRING KIT	MERITOR CALIPER HWD. KIT OR RETURN SPRING KIT	MERITOR ADJUSTER KIT (LEFT WHEEL)	MERITOR ADJUSTER KIT (RIGHT WHEEL)
MAGIRUS(Cont.)									
160 A13FL(Cont.)									
1981									
	Fa		15-1/2 " x 5 "	1356	R46700021	R407048	R407049[349]	NR	NR
	Fa		15-1/2 " x 5 "	1356	R46700021	R407048	R407049[349]	NR	NR
	Fa		15-1/2 " x 5 "	1356	R46700021	R407048	R407049[349]	NR	NR
	Fa		15-1/2 " x 5 "	1356	R46700021	R407048	R407049[349]	NR	NR
	Fa		15-1/2 " x 5 "	1356	R46700021	R407048	R407049[349]	NR	NR
	Fa		15-1/2 " x 5 "	1356	R46700021	R407048	R407049[349]	NR	NR
	Fa		15-1/2 " x 5 "	1356	R46700021	R407048	R407049[349]	NR	NR
	Fa		15-1/2 " x 5 "	1356	R46700021	R407048	R407049[349]	NR	NR
	Fa		15-1/2 " x 5 "	1356	R46700021	R407048	R407049[349]	NR	NR
	Ra		15-1/2 " x 6 "	1357	-	R407048	R407049[349]	NR	NR
	Ra		15-1/2 " x 6 "	1357	-	R407048	R407049[349]	NR	NR
1980									
	Fa		15-1/2 " x 5 "	1356	R46700021	R407048	R407049[349]	NR	NR
	Fa		15-1/2 " x 5 "	1356	R46700021	R407048	R407049[349]	NR	NR
	Fa		15-1/2 " x 5 "	1356	R46700021	R407048	R407049[349]	NR	NR
	Fa		15-1/2 " x 5 "	1356	R46700021	R407048	R407049[349]	NR	NR
	Fa		15-1/2 " x 5 "	1356	R46700021	R407048	R407049[349]	NR	NR
	Fa		15-1/2 " x 5 "	1356	R46700021	R407048	R407049[349]	NR	NR
	Fa		15-1/2 " x 5 "	1356	R46700021	R407048	R407049[349]	NR	NR
	Fa		15-1/2 " x 5 "	1356	R46700021	R407048	R407049[349]	NR	NR
	Fa		15-1/2 " x 5 "	1356	R46700021	R407048	R407049[349]	NR	NR
	Fa		15-1/2 " x 5 "	1356	R46700021	R407048	R407049[349]	NR	NR
	Fa		15-1/2 " x 5 "	1356	R46700021	R407048	R407049[349]	NR	NR
	Ra		15-1/2 " x 6 "	1357	-	R407048	R407049[349]	NR	NR
	Ra		15-1/2 " x 6 "	1357	-	R407048	R407049[349]	NR	NR
1979									
	Fa		15-1/2 " x 5 "	1356	R46700021	R407048	R407049[349]	NR	NR
	Fa		15-1/2 " x 5 "	1356	R46700021	R407048	R407049[349]	NR	NR
	Fa		15-1/2 " x 5 "	1356	R46700021	R407048	R407049[349]	NR	NR
	Fa		15-1/2 " x 5 "	1356	R46700021	R407048	R407049[349]	NR	NR
	Fa		15-1/2 " x 5 "	1356	R46700021	R407048	R407049[349]	NR	NR
	Fa		15-1/2 " x 5 "	1356	R46700021	R407048	R407049[349]	NR	NR
	Fa		15-1/2 " x 5 "	1356	R46700021	R407048	R407049[349]	NR	NR
	Fa		15-1/2 " x 5 "	1356	R46700021	R407048	R407049[349]	NR	NR
	Fa		15-1/2 " x 5 "	1356	R46700021	R407048	R407049[349]	NR	NR
	Fa		15-1/2 " x 5 "	1356	R46700021	R407048	R407049[349]	NR	NR
	Fa		15-1/2 " x 5 "	1356	R46700021	R407048	R407049[349]	NR	NR
	Ra		15-1/2 " x 6 "	1357	-	R407048	R407049[349]	NR	NR
	Ra		15-1/2 " x 6 "	1357	-	R407048	R407049[349]	NR	NR
1978									
	Fa		15-1/2 " x 5 "	1356	R46700021	R407048	R407049[349]	NR	NR
	Fa		15-1/2 " x 5 "	1356	R46700021	R407048	R407049[349]	NR	NR
	Fa		15-1/2 " x 5 "	1356	R46700021	R407048	R407049[349]	NR	NR
	Fa		15-1/2 " x 5 "	1356	R46700021	R407048	R407049[349]	NR	NR
	Ra		15-1/2 " x 6 "	1357	-	R407048	R407049[349]	NR	NR
	Ra		15-1/2 " x 6 "	1357	-	R407048	R407049[349]	NR	NR
MITSUBISHI FUSO									
FE									
1994									
	Fd			7500 - D433	MD433	R4010797	R409865	NR	NR
	Fm		320mm x 75mm	1467 - S682	R469831	R409855	R409856	N/A	N/A
	Ra		320mm x 75mm	1467 - S682	R469831	R409855	R409856	N/A	N/A
	Rm		320mm x 75mm	1467 - S682	R469831	R409855	R409856	N/A	N/A
1993									
	Fd			7500 - D433	MD433	R4010797	R409865	NR	NR
	Fm		320mm x 75mm	1467 - S682	R469831	R409855	R409856	N/A	N/A
	Rm		320mm x 75mm	1467 - S682	R469831	R409855	R409856	N/A	N/A
1992									
	Fd			7500 - D433	MD433	R4010797	R409865	NR	NR
	Fm		320mm x 75mm	1467 - S682	R469831	R409855	R409856	N/A	N/A
	Rm		320mm x 75mm	1467 - S682	R469831	R409855	R409856	N/A	N/A

349 - Contains Adjuster

MERITOR DRUM OR ROTOR NO.	CALIPER OR CYLINDER BORE SIZE	MERITOR CALIPER OR WHEEL CYLINDER (LEFT)	MERITOR CALIPER OR WHEEL CYLINDER (RIGHT)	MERITOR CALIPER OR WHEEL CYLINDER REPAIR KIT	MERITOR CALIPER PISTON	MERITOR MASTER CYLINDER	MERITOR MASTER CYLINDER KIT	MERITOR BRAKE HOSE (LEFT)	MERITOR BRAKE HOSE (RIGHT)
MAGIRUS(Cont.)									
160 A13FL(Cont.)									
R447194	1-1/2 "	R417055	R417057	R417068	NR	-	-	-	-
R447194	1-1/2 "	R 417050	R 417052	R417067	NR	-	-	-	-
R447194	1-1/2 "	R 417051	R 417053	R417067	NR	-	-	-	-
R447194	1-3/4 "	R417054	R417056	R417068	NR	-	-	-	-
R447194	1-1/2 "	R417055	R417057	R417068	NR	-	-	-	-
R447194	1-1/2 "	R 417050	R 417052	R417067	NR	-	-	-	-
R447194	1-1/2 "	R 417051	R 417053	R417067	NR	-	-	-	-
R447194	1-3/4 "	R417054	R417056	R417068	NR	-	-	-	-
R447194	1-1/2 "	R417055	R417057	R417068	NR	-	-	-	-
R447195	1-3/4 "	R417054	R417056	R417068	NR	-	-	-	-
R447195	1-3/4 "	R417058	R417059	R417069	NR	-	-	-	-
R447194	1-1/2 "	R 417050	R 417052	R417067	NR	-	-	-	-
R447194	1-1/2 "	R 417051	R 417053	R417067	NR	-	-	-	-
R447194	1-3/4 "	R417054	R417056	R417068	NR	-	-	-	-
R447194	1-1/2 "	R417055	R417057	R417068	NR	-	-	-	-
R447194	1-1/2 "	R 417050	R 417052	R417067	NR	-	-	-	-
R447194	1-1/2 "	R 417051	R 417053	R417067	NR	-	-	-	-
R447194	1-3/4 "	R417054	R417056	R417068	NR	-	-	-	-
R447194	1-1/2 "	R417055	R417057	R417068	NR	-	-	-	-
R447194	1-1/2 "	R 417050	R 417052	R417067	NR	-	-	-	-
R447194	1-1/2 "	R 417051	R 417053	R417067	NR	-	-	-	-
R447194	1-3/4 "	R417054	R417056	R417068	NR	-	-	-	-
R447194	1-1/2 "	R417055	R417057	R417068	NR	-	-	-	-
R447195	1-3/4 "	R417054	R417056	R417068	NR	-	-	-	-
R447195	1-3/4 "	R417058	R417059	R417069	NR	-	-	-	-
R447194	1-1/2 "	R 417050	R 417052	R417067	NR	-	-	-	-
R447194	1-1/2 "	R 417051	R 417053	R417067	NR	-	-	-	-
R447194	1-3/4 "	R417054	R417056	R417068	NR	-	-	-	-
R447194	1-1/2 "	R417055	R417057	R417068	NR	-	-	-	-
R447194	1-1/2 "	R 417050	R 417052	R417067	NR	-	-	-	-
R447194	1-1/2 "	R 417051	R 417053	R417067	NR	-	-	-	-
R447194	1-3/4 "	R417054	R417056	R417068	NR	-	-	-	-
R447194	1-1/2 "	R417055	R417057	R417068	NR	-	-	-	-
R447195	1-3/4 "	R417054	R417056	R417068	NR	-	-	-	-
R447195	1-3/4 "	R417058	R417059	R417069	NR	-	-	-	-
R447194	1-1/2 "	R 417050	R 417052	R417067	NR	-	-	-	-
R447194	1-1/2 "	R 417051	R 417053	R417067	NR	-	-	-	-
R447194	1-3/4 "	R417054	R417056	R417068	NR	-	-	-	-
R447194	1-1/2 "	R417055	R417057	R417068	NR	-	-	-	-
R447195	1-3/4 "	R417054	R417056	R417068	NR	-	-	-	-
R447195	1-3/4 "	R417058	R417059	R417069	NR	-	-	-	-
MITSUBISHI FUSO									
FE									
N/A		N/A	N/A	R409866	N/A	-	-	-	-
N/A		N/A	N/A	N/A	NR	-	-	-	-
N/A		N/A	N/A	N/A	NR	-	-	-	-
N/A		N/A	N/A	N/A	NR	-	-	-	-
N/A		N/A	N/A	R409866	N/A	-	-	-	-
N/A		N/A	N/A	N/A	NR	-	-	-	-
N/A		N/A	N/A	N/A	NR	-	-	-	-
N/A		N/A	N/A	R409866	N/A	-	-	-	-
N/A		N/A	N/A	N/A	NR	-	-	-	-
N/A		N/A	N/A	N/A	NR	-	-	-	-

MAKE MODEL YEAR AXLE CODE AXLE WEIGHT	AXLE & BRK. TYPE	BRK. MFG.	BRAKE SIZE	FMSI	MERITOR DISC PAD OR BRAKE SHOE	MERITOR GUIDE PIN OR RETURN SPRING KIT	MERITOR CALIPER HWD. KIT OR RETURN SPRING KIT	MERITOR ADJUSTER KIT (LEFT WHEEL)	MERITOR ADJUSTER KIT (RIGHT WHEEL)
MITSUBISHI FUSO(Cont.)									
FE(Cont.)									
1991									
	Fd			7500 - D433	MD433	R4010797	R409865	NR	NR
	Fm		320mm x 75mm	1467 - S682	R469831	R409855	R409856	N/A	N/A
	Rm		320mm x 75mm	1467 - S682	R469831	R409855	R409856	N/A	N/A
1990									
	Fd			7500 - D433	MD433	R4010797	R409865	NR	NR
	Fm		320mm x 75mm	1467 - S682	R469831	R409855	R409856	N/A	N/A
	Rm		320mm x 75mm	1467 - S682	R469831	R409855	R409856	N/A	N/A
1989									
	Fd			7500 - D433	MD433	R4010797	R409865	NR	NR
	Fm		320mm x 75mm	1467 - S682	R469831	R409855	R409856	N/A	N/A
	Rm		320mm x 75mm	1467 - S682	R469831	R409855	R409856	N/A	N/A
1988									
	Fd			7499 - D624	MD624	N/A	N/A	NR	NR
	Fm		320mm x 75mm	1467 - S682	R469831	R409855	R409856	N/A	N/A
	Rm		320mm x 75mm	1467 - S682	R469831	R409855	R409856	N/A	N/A
1987									
	Fd			7499 - D624	MD624	N/A	N/A	NR	NR
	Fm		320mm x 75mm	1467 - S682	R469831	R409855	R409856	N/A	N/A
	Rm		320mm x 75mm	1467 - S682	R469831	R409855	R409856	N/A	N/A
FE - HD MODEL 639L									
2005									
	Ra		321.5mm x 320mm x 75mm	1468 - S682	R4112444	R4112445	-	NR	NR
	Ra		321.5mm x 320mm x 75mm	1468 - S682	R4112444	R4112445	-	NR	NR
13,500 lb GVWR / axle 5,070 lb w / 4 wheel disc Reverse Elliot I - Beam / 5,290 lb Capacity									
	Fd			7604 - D735	MD735	NR	R4112431	NR	NR
	Fd			7604 - D735	MD735	NR	R4112431	NR	NR
13,500 lb GVWR / axle 9,040 lb w / 4 wheel disc Full floating type / 9,480 lb Capacity									
	Rd			7603 - D734	MD734	NR	-	NR	NR
	Rd			7603 - D734	MD734	NR	-	NR	NR
2004									
	Ra		321.5mm x 320mm x 75mm	1468 - S682	R4112444	R4112445	-	NR	NR
	Ra		321.5mm x 320mm x 75mm	1468 - S682	R4112444	R4112445	-	NR	NR
13,500 lb GVWR / axle 5,070 lb w / 4 wheel disc Reverse Elliot I - Beam / 5,290 lb Capacity									
	Fd			7604 - D735	MD735	NR	R4112431	NR	NR
	Fd			7604 - D735	MD735	NR	R4112431	NR	NR
13,500 lb GVWR / axle 9,040 lb w / 4 wheel disc Full floating type / 9,480 lb Capacity									
	Rd			7603 - D734	MD734	NR	-	NR	NR
	Rd			7603 - D734	MD734	NR	-	NR	NR
2003									
	Ra		321.5mm x 320mm x 75mm	1468 - S682	R4112444	R4112445	-	NR	NR
	Ra		321.5mm x 320mm x 75mm	1468 - S682	R4112444	R4112445	-	NR	NR
13,500 lb GVWR / axle 5,070 lb w / 4 wheel disc Reverse Elliot I - Beam / 5,290 lb Capacity									
	Fd			7604 - D735	MD735	NR	R4112431	NR	NR
	Fd			7604 - D735	MD735	NR	R4112431	NR	NR
13,500 lb GVWR / axle 9,040 lb w / 4 wheel disc Full floating type / 9,480 lb Capacity									
	Rd			7603 - D734	MD734	NR	-	NR	NR

329 - Forward

330 - Rearward

MERITOR DRUM OR ROTOR NO.	CALIPER OR CYLINDER BORE SIZE	MERITOR CALIPER OR WHEEL CYLINDER (LEFT)	MERITOR CALIPER OR WHEEL CYLINDER (RIGHT)	MERITOR CALIPER OR WHEEL CYLINDER REPAIR KIT	MERITOR CALIPER PISTON	MERITOR MASTER CYLINDER	MERITOR MASTER CYLINDER KIT	MERITOR BRAKE HOSE (LEFT)	MERITOR BRAKE HOSE (RIGHT)
MITSUBISHI FUSO(Cont.)									
FE(Cont.)									
N/A		N/A	N/A	R409866	N/A	-	-	-	-
N/A		N/A	N/A	N/A	NR	-	-	-	-
N/A		N/A	N/A	N/A	NR	-	-	-	-
N/A		N/A	N/A	R409866	N/A	-	-	-	-
N/A		N/A	N/A	N/A	NR	-	-	-	-
N/A		N/A	N/A	N/A	NR	-	-	-	-
N/A		N/A	N/A	R409866	N/A	-	-	-	-
N/A		N/A	N/A	N/A	NR	-	-	-	-
N/A		N/A	N/A	N/A	NR	-	-	-	-
N/A		N/A	N/A	N/A	N/A	-	-	-	-
N/A		N/A	N/A	N/A	NR	-	-	-	-
N/A		N/A	N/A	N/A	NR	-	-	-	-
N/A		N/A	N/A	N/A	N/A	-	-	-	-
N/A		N/A	N/A	N/A	NR	-	-	-	-
N/A		N/A	N/A	N/A	NR	-	-	-	-
FE - HD MODEL 639L									
R4612443	1-1/8 "	R4112446	R4112448[329]	N/A	NR	-	-	-	-
R4612443	1-1/8 "	R4112447	R4112449[330]	N/A	NR	-	-	-	-
R4212432	51mm	R4612434	R4612436	R4112437	N/A	-	-	-	-
R4212432	51mm	R4612433	R4612435	R4112437	N/A	-	-	-	-
R4212438	51mm	R4612439	R4612441	R4112437	N/A	-	-	-	-
R4212438	51mm	R4612440	R4612442	R4112437	N/A	-	-	-	-
R4612443	1-1/8 "	R4112446	R4112448[329]	N/A	NR	-	-	-	-
R4612443	1-1/8 "	R4112447	R4112449[330]	N/A	NR	-	-	-	-
R4212432	51mm	R4612433	R4612435	R4112437	N/A	-	-	-	-
R4212432	51mm	R4612434	R4612436	R4112437	N/A	-	-	-	-
R4212438	51mm	R4612440	R4612442	R4112437	N/A	-	-	-	-
R4212438	51mm	R4612439	R4612441	R4112437	N/A	-	-	-	-
R4612443	1-1/8 "	R4112447	R4112449[330]	N/A	NR	-	-	-	-
R4612443	1-1/8 "	R4112446	R4112448[329]	N/A	NR	-	-	-	-
R4212432	51mm	R4612433	R4612435	R4112437	N/A	-	-	-	-
R4212432	51mm	R4612434	R4612436	R4112437	N/A	-	-	-	-
R4212438	51mm	R4612439	R4612441	R4112437	N/A	-	-	-	-

MAKE MODEL YEAR AXLE CODE AXLE WEIGHT	AXLE & BRK. TYPE	BRK. MFG.	BRAKE SIZE	FMSI	MERITOR DISC PAD OR BRAKE SHOE	MERITOR GUIDE PIN OR RETURN SPRING KIT	MERITOR CALIPER HWD. KIT OR RETURN SPRING KIT	MERITOR ADJUSTER KIT (LEFT WHEEL)	MERITOR ADJUSTER KIT (RIGHT WHEEL)
MITSUBISHI FUSO(Cont.)									
FE - HD MODEL 639L(Cont.)									
2003 13,500 lb GVWR / axle 9,040 lb w / 4 wheel disc Full floating type / 9,480 lb Capacity	Rd			7603 - D734	MD734	NR	-	NR	NR
2002	Ra		321.5mm x 320mm x 75mm	1468 - S682	R4112444	R4112445	-	NR	NR
	Ra		321.5mm x 320mm x 75mm	1468 - S682	R4112444	R4112445	-	NR	NR
13,500 lb GVWR / axle 5,070 lb w / 4 wheel disc Reverse Elliot I - Beam / 5,290 lb Capacity	Fd			7604 - D735	MD735	NR	R4112431	NR	NR
	Fd			7604 - D735	MD735	NR	R4112431	NR	NR
13,500 lb GVWR / axle 9,040 lb w / 4 wheel disc Full floating type / 9,480 lb Capacity	Rd			7603 - D734	MD734	NR	-	NR	NR
	Rd			7603 - D734	MD734	NR	-	NR	NR
2001	Ra		321.5mm x 320mm x 75mm	1468 - S682	R4112444	R4112445	-	NR	NR
	Ra		321.5mm x 320mm x 75mm	1468 - S682	R4112444	R4112445	-	NR	NR
13,500 lb GVWR / axle 5,070 lb w / 4 wheel disc Reverse Elliot I - Beam / 5,290 lb Capacity	Fd			7604 - D735	MD735	NR	R4112431	NR	NR
	Fd			7604 - D735	MD735	NR	R4112431	NR	NR
13,500 lb GVWR / axle 9,040 lb w / 4 wheel disc Full floating type / 9,480 lb Capacity	Rd			7603 - D734	MD734	NR	-	NR	NR
	Rd			7603 - D734	MD734	NR	-	NR	NR
2000	Ra		321.5mm x 320mm x 75mm	1468 - S682	R4112444	R4112445	-	NR	NR
	Ra		321.5mm x 320mm x 75mm	1468 - S682	R4112444	R4112445	-	NR	NR
13,500 lb GVWR / axle 5,070 lb w / 4 wheel disc Reverse Elliot I - Beam / 5,290 lb Capacity	Fd			7604 - D735	MD735	NR	R4112431	NR	NR
	Fd			7604 - D735	MD735	NR	R4112431	NR	NR
13,500 lb GVWR / axle 9,040 lb w / 4 wheel disc Full floating type / 9,480 lb Capacity	Rd			7603 - D734	MD734	NR	-	NR	NR
	Rd			7603 - D734	MD734	NR	-	NR	NR
1999	Ra		321.5mm x 320mm x 75mm	1468 - S682	R4112444	R4112445	-	NR	NR
	Ra		321.5mm x 320mm x 75mm	1468 - S682	R4112444	R4112445	-	NR	NR
13,500 lb GVWR / axle 5,070 lb w / 4 wheel disc Reverse Elliot I - Beam / 5,290 lb Capacity	Fd			7604 - D735	MD735	NR	R4112431	NR	NR
	Fd			7604 - D735	MD735	NR	R4112431	NR	NR
13,500 lb GVWR / axle 9,040 lb w / 4 wheel disc Full floating type / 9,480 lb Capacity	Rd			7603 - D734	MD734	NR	-	NR	NR
	Rd			7603 - D734	MD734	NR	-	NR	NR

329 - Forward

330 - Rearward

MERITOR DRUM OR ROTOR NO.	CALIPER OR CYLINDER BORE SIZE	MERITOR CALIPER OR WHEEL CYLINDER (LEFT)	MERITOR CALIPER OR WHEEL CYLINDER (RIGHT)	MERITOR CALIPER OR WHEEL CYLINDER REPAIR KIT	MERITOR CALIPER PISTON	MERITOR MASTER CYLINDER	MERITOR MASTER CYLINDER KIT	MERITOR BRAKE HOSE (LEFT)	MERITOR BRAKE HOSE (RIGHT)
MITSUBISHI FUSO(Cont.)									
FE - HD MODEL 639L(Cont.)									
R4212438	51mm	R4612440	R4612442	R4112437	N/A	-	-	-	-
R4612443	1-1/8 "	R4112446	R4112448[329]	N/A	NR	-	-	-	-
R4612443	1-1/8 "	R4112447	R4112449[330]	N/A	NR	-	-	-	-
R4212432	51mm	R4612434	R4612436	R4112437	N/A	-	-	-	-
R4212432	51mm	R4612433	R4612435	R4112437	N/A	-	-	-	-
R4212438	51mm	R4612440	R4612442	R4112437	N/A	-	-	-	-
R4212438	51mm	R4612439	R4612441	R4112437	N/A	-	-	-	-
R4612443	1-1/8 "	R4112447	R4112449[330]	N/A	NR	-	-	-	-
R4612443	1-1/8 "	R4112446	R4112448[329]	N/A	NR	-	-	-	-
R4212432	51mm	R4612433	R4612435	R4112437	N/A	-	-	-	-
R4212432	51mm	R4612434	R4612436	R4112437	N/A	-	-	-	-
R4212438	51mm	R4612440	R4612442	R4112437	N/A	-	-	-	-
R4212438	51mm	R4612439	R4612441	R4112437	N/A	-	-	-	-
R4612443	1-1/8 "	R4112446	R4112448[329]	N/A	NR	-	-	-	-
R4612443	1-1/8 "	R4112447	R4112449[330]	N/A	NR	-	-	-	-
R4212432	51mm	R4612434	R4612436	R4112437	N/A	-	-	-	-
R4212432	51mm	R4612433	R4612435	R4112437	N/A	-	-	-	-
R4212438	51mm	R4612440	R4612442	R4112437	N/A	-	-	-	-
R4212438	51mm	R4612439	R4612441	R4112437	N/A	-	-	-	-
R4612443	1-1/8 "	R4112447	R4112449[330]	N/A	NR	-	-	-	-
R4612443	1-1/8 "	R4112446	R4112448[329]	N/A	NR	-	-	-	-
R4212432	51mm	R4612434	R4612436	R4112437	N/A	-	-	-	-
R4212432	51mm	R4612433	R4612435	R4112437	N/A	-	-	-	-
R4212438	51mm	R4612439	R4612441	R4112437	N/A	-	-	-	-
R4212438	51mm	R4612440	R4612442	R4112437	N/A	-	-	-	-

MAKE MODEL YEAR AXLE CODE AXLE WEIGHT	AXLE & BRK. TYPE	BRK. MFG.	BRAKE SIZE	FMSI	MERITOR DISC PAD OR BRAKE SHOE	MERITOR GUIDE PIN OR RETURN SPRING KIT	MERITOR CALIPER HWD. KIT OR RETURN SPRING KIT	MERITOR ADJUSTER KIT (LEFT WHEEL)	MERITOR ADJUSTER KIT (RIGHT WHEEL)
MITSUBISHI FUSO(Cont.)									
FE - HD MODEL 639L(Cont.)									
1998									
	Ra		321.5mm x 320mm x 75mm	1468 - S682	R4112444	R4112445	-	NR	NR
	Ra		321.5mm x 320mm x 75mm	1468 - S682	R4112444	R4112445	-	NR	NR
13,500 lb GVWR / axle 5,070 lb w / 4 wheel disc Reverse Elliot I - Beam / 5,290 lb Capacity	Fd			7604 - D735	MD735	NR	R4112431	NR	NR
	Fd			7604 - D735	MD735	NR	R4112431	NR	NR
13,500 lb GVWR / axle 9,040 lb w / 4 wheel disc Full floating type / 9,480 lb Capacity	Rd			7603 - D734	MD734	NR	-	NR	NR
	Rd			7603 - D734	MD734	NR	-	NR	NR
1997									
	Ra		321.5mm x 320mm x 75mm	1468 - S682	R4112444	R4112445	-	NR	NR
	Ra		321.5mm x 320mm x 75mm	1468 - S682	R4112444	R4112445	-	NR	NR
13,500 lb GVWR / axle 5,070 lb w / 4 wheel disc Reverse Elliot I - Beam / 5,290 lb Capacity	Fd			7604 - D735	MD735	NR	R4112431	NR	NR
	Fd			7604 - D735	MD735	NR	R4112431	NR	NR
13,500 lb GVWR / axle 9,040 lb w / 4 wheel disc Full floating type / 9,480 lb Capacity	Rd			7603 - D734	MD734	NR	-	NR	NR
	Rd			7603 - D734	MD734	NR	-	NR	NR
1996									
	Ra		321.5mm x 320mm x 75mm	1468 - S682	R4112444	R4112445	-	NR	NR
	Ra		321.5mm x 320mm x 75mm	1468 - S682	R4112444	R4112445	-	NR	NR
13,500 lb GVWR / axle 5,070 lb w / 4 wheel disc Reverse Elliot I - Beam / 5,290 lb Capacity	Fd			7604 - D735	MD735	NR	R4112431	NR	NR
	Fd			7604 - D735	MD735	NR	R4112431	NR	NR
13,500 lb GVWR / axle 9,040 lb w / 4 wheel disc Full floating type / 9,480 lb Capacity	Rd			7603 - D734	MD734	NR	-	NR	NR
	Rd			7603 - D734	MD734	NR	-	NR	NR
1995									
	Ra		321.5mm x 320mm x 75mm	1468 - S682	R4112444	R4112445	-	NR	NR
	Ra		321.5mm x 320mm x 75mm	1468 - S682	R4112444	R4112445	-	NR	NR
13,500 lb GVWR / axle 5,070 lb w / 4 wheel disc Reverse Elliot I - Beam / 5,290 lb Capacity	Fd			7604 - D735	MD735	NR	R4112431	NR	NR
	Fd			7604 - D735	MD735	NR	R4112431	NR	NR
13,500 lb GVWR / axle 9,040 lb w / 4 wheel disc Full floating type / 9,480 lb Capacity	Rd			7603 - D734	MD734	NR	-	NR	NR
	Rd			7603 - D734	MD734	NR	-	NR	NR
FE - HD MODEL 639T									
2004									
	Ra		321.5mm x 320mm x 75mm	1468 - S682	R4112444	R4112445	-	NR	NR

329 - Forward

330 - Rearward

MERITOR DRUM OR ROTOR NO.	CALIPER OR CYLINDER BORE SIZE	MERITOR CALIPER OR WHEEL CYLINDER (LEFT)	MERITOR CALIPER OR WHEEL CYLINDER (RIGHT)	MERITOR CALIPER OR WHEEL CYLINDER REPAIR KIT	MERITOR CALIPER PISTON	MERITOR MASTER CYLINDER	MERITOR MASTER CYLINDER KIT	MERITOR BRAKE HOSE (LEFT)	MERITOR BRAKE HOSE (RIGHT)
MITSUBISHI FUSO(Cont.)									
FE - HD MODEL 639L(Cont.)									
R4612443	1-1/8 "	R4112446	R4112448[329]	N/A	NR	-	-	-	-
R4612443	1-1/8 "	R4112447	R4112449[330]	N/A	NR	-	-	-	-
R4212432	51mm	R4612433	R4612435	R4112437	N/A	-	-	-	-
R4212432	51mm	R4612434	R4612436	R4112437	N/A	-	-	-	-
R4212438	51mm	R4612439	R4612441	R4112437	N/A	-	-	-	-
R4212438	51mm	R4612440	R4612442	R4112437	N/A	-	-	-	-
R4612443	1-1/8 "	R4112447	R4112449[330]	N/A	NR	-	-	-	-
R4612443	1-1/8 "	R4112446	R4112448[329]	N/A	NR	-	-	-	-
R4212432	51mm	R4612434	R4612436	R4112437	N/A	-	-	-	-
R4212432	51mm	R4612433	R4612435	R4112437	N/A	-	-	-	-
R4212438	51mm	R4612439	R4612441	R4112437	N/A	-	-	-	-
R4212438	51mm	R4612440	R4612442	R4112437	N/A	-	-	-	-
R4612443	1-1/8 "	R4112446	R4112448[329]	N/A	NR	-	-	-	-
R4612443	1-1/8 "	R4112447	R4112449[330]	N/A	NR	-	-	-	-
R4212432	51mm	R4612433	R4612435	R4112437	N/A	-	-	-	-
R4212432	51mm	R4612434	R4612436	R4112437	N/A	-	-	-	-
R4212438	51mm	R4612439	R4612441	R4112437	N/A	-	-	-	-
R4212438	51mm	R4612440	R4612442	R4112437	N/A	-	-	-	-
R4612443	1-1/8 "	R4112447	R4112449[330]	N/A	NR	-	-	-	-
R4612443	1-1/8 "	R4112446	R4112448[329]	N/A	NR	-	-	-	-
R4212432	51mm	R4612433	R4612435	R4112437	N/A	-	-	-	-
R4212432	51mm	R4612434	R4612436	R4112437	N/A	-	-	-	-
R4212438	51mm	R4612439	R4612441	R4112437	N/A	-	-	-	-
R4212438	51mm	R4612440	R4612442	R4112437	N/A	-	-	-	-
FE - HD MODEL 639T									
R4612443	1-1/8 "	R4112447	R4112449[330]	N/A	NR	-	-	-	-

MAKE MODEL YEAR AXLE CODE AXLE WEIGHT	AXLE & BRK. TYPE	BRK. MFG.	BRAKE SIZE	FMSI	MERITOR DISC PAD OR BRAKE SHOE	MERITOR GUIDE PIN OR RETURN SPRING KIT	MERITOR CALIPER HWD. KIT OR RETURN SPRING KIT	MERITOR ADJUSTER KIT (LEFT WHEEL)	MERITOR ADJUSTER KIT (RIGHT WHEEL)
MITSUBISHI FUSO(Cont.)									
FE - HD MODEL 639T(Cont.)									
2004									
	Ra		321.5mm x 320mm x 75mm	1468 - S682	R4112444	R4112445	-	NR	NR
14,050 lb GVWR / axle 5,290 lb w / 4 wheel disc Reverse Elliot I - Beam / 5,290 lb Capacity	Fd			7603 - D734	MD734	-	-	NR	NR
	Fd			7603 - D734	MD734	-	-	NR	NR
Full floating type / 9,480 lb Capacity	Rd			7603 - D734	MD734	NR	-	NR	NR
	Rd			7603 - D734	MD734	NR	-	NR	NR
2003									
	Ra		321.5mm x 320mm x 75mm	1468 - S682	R4112444	R4112445	-	NR	NR
	Ra		321.5mm x 320mm x 75mm	1468 - S682	R4112444	R4112445	-	NR	NR
14,050 lb GVWR / axle 5,290 lb w / 4 wheel disc Reverse Elliot I - Beam / 5,290 lb Capacity	Fd			7603 - D734	MD734	-	-	NR	NR
	Fd			7603 - D734	MD734	-	-	NR	NR
Full floating type / 9,480 lb Capacity	Rd			7603 - D734	MD734	NR	-	NR	NR
	Rd			7603 - D734	MD734	NR	-	NR	NR
2002									
	Ra		321.5mm x 320mm x 75mm	1468 - S682	R4112444	R4112445	-	NR	NR
	Ra		321.5mm x 320mm x 75mm	1468 - S682	R4112444	R4112445	-	NR	NR
14,050 lb GVWR / axle 5,290 lb w / 4 wheel disc Reverse Elliot I - Beam / 5,290 lb Capacity	Fd			7603 - D734	MD734	-	-	NR	NR
	Fd			7603 - D734	MD734	-	-	NR	NR
Full floating type / 9,480 lb Capacity	Rd			7603 - D734	MD734	NR	-	NR	NR
	Rd			7603 - D734	MD734	NR	-	NR	NR
2001									
	Ra		321.5mm x 320mm x 75mm	1468 - S682	R4112444	R4112445	-	NR	NR
	Ra		321.5mm x 320mm x 75mm	1468 - S682	R4112444	R4112445	-	NR	NR
14,050 lb GVWR / axle 5,290 lb w / 4 wheel disc Reverse Elliot I - Beam / 5,290 lb Capacity	Fd			7603 - D734	MD734	-	-	NR	NR
	Fd			7603 - D734	MD734	-	-	NR	NR
Full floating type / 9,480 lb Capacity	Rd			7603 - D734	MD734	NR	-	NR	NR
	Rd			7603 - D734	MD734	NR	-	NR	NR
2000									
	Ra		321.5mm x 320mm x 75mm	1468 - S682	R4112444	R4112445	-	NR	NR
	Ra		321.5mm x 320mm x 75mm	1468 - S682	R4112444	R4112445	-	NR	NR
14,050 lb GVWR / axle 5,290 lb w / 4 wheel disc Reverse Elliot I - Beam / 5,290 lb Capacity	Fd			7603 - D734	MD734	-	-	NR	NR
	Fd			7603 - D734	MD734	-	-	NR	NR
Full floating type / 9,480 lb Capacity	Rd			7603 - D734	MD734	NR	-	NR	NR
	Rd			7603 - D734	MD734	NR	-	NR	NR
1999									
	Ra		321.5mm x 320mm x 75mm	1468 - S682	R4112444	R4112445	-	NR	NR

329 - Forward

330 - Rearward

MERITOR DRUM OR ROTOR NO.	CALIPER OR CYLINDER BORE SIZE	MERITOR CALIPER OR WHEEL CYLINDER (LEFT)	MERITOR CALIPER OR WHEEL CYLINDER (RIGHT)	MERITOR CALIPER OR WHEEL CYLINDER REPAIR KIT	MERITOR CALIPER PISTON	MERITOR MASTER CYLINDER	MERITOR MASTER CYLINDER KIT	MERITOR BRAKE HOSE (LEFT)	MERITOR BRAKE HOSE (RIGHT)
MITSUBISHI FUSO(Cont.)									
FE - HD MODEL 639T(Cont.)									
R4612443	1-1/8 "	R4112446	R4112448[329]	N/A	NR	-	-	-	-
R4212450	51mm	R4612456	R4612458	R4112437	N/A	-	-	-	-
R4212450	51mm	R4612455	R4612457	R4112437	N/A	-	-	-	-
R4212438	51mm	R4612439	R4612441	R4112437	N/A	-	-	-	-
R4212438	51mm	R4612440	R4612442	R4112437	N/A	-	-	-	-
R4612443	1-1/8 "	R4112446	R4112448[329]	N/A	NR	-	-	-	-
R4612443	1-1/8 "	R4112447	R4112449[330]	N/A	NR	-	-	-	-
R4212450	51mm	R4612455	R4612457	R4112437	N/A	-	-	-	-
R4212450	51mm	R4612456	R4612458	R4112437	N/A	-	-	-	-
R4212438	51mm	R4612439	R4612441	R4112437	N/A	-	-	-	-
R4212438	51mm	R4612440	R4612442	R4112437	N/A	-	-	-	-
R4612443	1-1/8 "	R4112446	R4112448[329]	N/A	NR	-	-	-	-
R4612443	1-1/8 "	R4112447	R4112449[330]	N/A	NR	-	-	-	-
R4212450	51mm	R4612455	R4612457	R4112437	N/A	-	-	-	-
R4212450	51mm	R4612456	R4612458	R4112437	N/A	-	-	-	-
R4212438	51mm	R4612440	R4612442	R4112437	N/A	-	-	-	-
R4212438	51mm	R4612439	R4612441	R4112437	N/A	-	-	-	-
R4612443	1-1/8 "	R4112446	R4112448[329]	N/A	NR	-	-	-	-
R4612443	1-1/8 "	R4112447	R4112449[330]	N/A	NR	-	-	-	-
R4212450	51mm	R4612456	R4612458	R4112437	N/A	-	-	-	-
R4212450	51mm	R4612455	R4612457	R4112437	N/A	-	-	-	-
R4212438	51mm	R4612439	R4612441	R4112437	N/A	-	-	-	-
R4212438	51mm	R4612440	R4612442	R4112437	N/A	-	-	-	-
R4612443	1-1/8 "	R4112446	R4112448[329]	N/A	NR	-	-	-	-
R4612443	1-1/8 "	R4112447	R4112449[330]	N/A	NR	-	-	-	-
R4212450	51mm	R4612455	R4612457	R4112437	N/A	-	-	-	-
R4212450	51mm	R4612456	R4612458	R4112437	N/A	-	-	-	-
R4212438	51mm	R4612440	R4612442	R4112437	N/A	-	-	-	-
R4212438	51mm	R4612439	R4612441	R4112437	N/A	-	-	-	-
R4612443	1-1/8 "	R4112447	R4112449[330]	N/A	NR	-	-	-	-

MAKE MODEL YEAR AXLE CODE AXLE WEIGHT	AXLE & BRK. TYPE	BRK. MFG.	BRAKE SIZE	FMSI	MERITOR DISC PAD OR BRAKE SHOE	MERITOR GUIDE PIN OR RETURN SPRING KIT	MERITOR CALIPER HWD. KIT OR RETURN SPRING KIT	MERITOR ADJUSTER KIT (LEFT WHEEL)	MERITOR ADJUSTER KIT (RIGHT WHEEL)
MITSUBISHI FUSO(Cont.)									
FE - HD MODEL 639T(Cont.)									
1999									
	Ra		321.5mm x 320mm x 75mm	1468 - S682	R4112444	R4112445	-	NR	NR
13,500 lb GVWR / axle 5,070 lb w / 4 wheel disc Reverse Elliot I - Beam / 5,290 lb Capacity	Fd			7604 - D735	MD735	NR	R4112431	NR	NR
	Fd			7604 - D735	MD735	NR	R4112431	NR	NR
13,500 lb GVWR / axle 9,040 lb w / 4 wheel disc Full floating type / 9,480 lb Capacity	Rd			7603 - D734	MD734	NR	-	NR	NR
	Rd			7603 - D734	MD734	NR	-	NR	NR
1998									
	Ra		321.5mm x 320mm x 75mm	1468 - S682	R4112444	R4112445	-	NR	NR
	Ra		321.5mm x 320mm x 75mm	1468 - S682	R4112444	R4112445	-	NR	NR
13,500 lb GVWR / axle 5,070 lb w / 4 wheel disc Reverse Elliot I - Beam / 5,290 lb Capacity	Fd			7604 - D735	MD735	NR	R4112431	NR	NR
	Fd			7604 - D735	MD735	NR	R4112431	NR	NR
13,500 lb GVWR / axle 9,040 lb w / 4 wheel disc Full floating type / 9,480 lb Capacity	Rd			7603 - D734	MD734	NR	-	NR	NR
	Rd			7603 - D734	MD734	NR	-	NR	NR
1997									
	Ra		321.5mm x 320mm x 75mm	1468 - S682	R4112444	R4112445	-	NR	NR
	Ra		321.5mm x 320mm x 75mm	1468 - S682	R4112444	R4112445	-	NR	NR
13,500 lb GVWR / axle 5,070 lb w / 4 wheel disc Reverse Elliot I - Beam / 5,290 lb Capacity	Fd			7604 - D735	MD735	NR	R4112431	NR	NR
	Fd			7604 - D735	MD735	NR	R4112431	NR	NR
13,500 lb GVWR / axle 9,040 lb w / 4 wheel disc Full floating type / 9,480 lb Capacity	Rd			7603 - D734	MD734	NR	-	NR	NR
	Rd			7603 - D734	MD734	NR	-	NR	NR
1996									
	Ra		321.5mm x 320mm x 75mm	1468 - S682	R4112444	R4112445	-	NR	NR
	Ra		321.5mm x 320mm x 75mm	1468 - S682	R4112444	R4112445	-	NR	NR
13,500 lb GVWR / axle 5,070 lb w / 4 wheel disc Reverse Elliot I - Beam / 5,290 lb Capacity	Fd			7604 - D735	MD735	NR	R4112431	NR	NR
	Fd			7604 - D735	MD735	NR	R4112431	NR	NR
13,500 lb GVWR / axle 9,040 lb w / 4 wheel disc Full floating type / 9,480 lb Capacity	Rd			7603 - D734	MD734	NR	-	NR	NR
	Rd			7603 - D734	MD734	NR	-	NR	NR
1995									
	Ra		321.5mm x 320mm x 75mm	1468 - S682	R4112444	R4112445	-	NR	NR
	Ra		321.5mm x 320mm x 75mm	1468 - S682	R4112444	R4112445	-	NR	NR
13,500 lb GVWR / axle 5,070 lb w / 4 wheel disc Reverse Elliot I - Beam / 5,290 lb Capacity	Fd			7604 - D735	MD735	NR	R4112431	NR	NR

329 - Forward

330 - Rearward

MERITOR DRUM OR ROTOR NO.	CALIPER OR CYLINDER BORE SIZE	MERITOR CALIPER OR WHEEL CYLINDER (LEFT)	MERITOR CALIPER OR WHEEL CYLINDER (RIGHT)	MERITOR CALIPER OR WHEEL CYLINDER REPAIR KIT	MERITOR CALIPER PISTON	MERITOR MASTER CYLINDER	MERITOR MASTER CYLINDER KIT	MERITOR BRAKE HOSE (LEFT)	MERITOR BRAKE HOSE (RIGHT)
MITSUBISHI FUSO(Cont.)									
FE - HD MODEL 639T(Cont.)									
R4612443	1-1/8 "	R4112446	R4112448[329]	N/A	NR	-	-	-	-
R4212432 R4212432	51mm 51mm	R4612433 R4612434	R4612435 R4612436	R4112437 R4112437	N/A N/A	- -	- -	- -	- -
R4212438 R4212438	51mm 51mm	R4612439 R4612440	R4612441 R4612442	R4112437 R4112437	N/A N/A	- -	- -	- -	- -
R4612443 R4612443	1-1/8 " 1-1/8 "	R4112446 R4112447	R4112448[329] R4112449[330]	N/A N/A	NR NR	- -	- -	- -	- -
R4212432 R4212432	51mm 51mm	R4612434 R4612433	R4612436 R4612435	R4112437 R4112437	N/A N/A	- -	- -	- -	- -
R4212438 R4212438	51mm 51mm	R4612439 R4612440	R4612441 R4612442	R4112437 R4112437	N/A N/A	- -	- -	- -	- -
R4612443 R4612443	1-1/8 " 1-1/8 "	R4112446 R4112447	R4112448[329] R4112449[330]	N/A N/A	NR NR	- -	- -	- -	- -
R4212432 R4212432	51mm 51mm	R4612434 R4612433	R4612436 R4612435	R4112437 R4112437	N/A N/A	- -	- -	- -	- -
R4212438 R4212438	51mm 51mm	R4612439 R4612440	R4612441 R4612442	R4112437 R4112437	N/A N/A	- -	- -	- -	- -
R4612443 R4612443	1-1/8 " 1-1/8 "	R4112446 R4112447	R4112448[329] R4112449[330]	N/A N/A	NR NR	- -	- -	- -	- -
R4212432 R4212432	51mm 51mm	R4612433 R4612434	R4612435 R4612436	R4112437 R4112437	N/A N/A	- -	- -	- -	- -
R4212438 R4212438	51mm 51mm	R4612440 R4612439	R4612442 R4612441	R4112437 R4112437	N/A N/A	- -	- -	- -	- -
R4612443 R4612443	1-1/8 " 1-1/8 "	R4112446 R4112447	R4112448[329] R4112449[330]	N/A N/A	NR NR	- -	- -	- -	- -
R4212432	51mm	R4612434	R4612436	R4112437	N/A	-	-	-	-

MAKE MODEL YEAR AXLE CODE AXLE WEIGHT	AXLE & BRK. TYPE	BRK. MFG.	BRAKE SIZE	FMSI	MERITOR DISC PAD OR BRAKE SHOE	MERITOR GUIDE PIN OR RETURN SPRING KIT	MERITOR CALIPER HWD. KIT OR RETURN SPRING KIT	MERITOR ADJUSTER KIT (LEFT WHEEL)	MERITOR ADJUSTER KIT (RIGHT WHEEL)
MITSUBISHI FUSO(Cont.)									
FE - HD MODEL 639T(Cont.)									
1995									
	Fd			7604 - D735	MD735	NR	R4112431	NR	NR
13,500 lb GVWR / axle 9,040 lb w / 4 wheel disc Full floating type / 9,480 lb Capacity	Rd			7603 - D734	MD734	NR	-	NR	NR
	Rd			7603 - D734	MD734	NR	-	NR	NR
FE - HD MODEL 640, 649									
2005									
	Ra		321.5mm x 320mm x 75mm	1468 - S682	R4112444	R4112445	-	NR	NR
	Ra		321.5mm x 320mm x 75mm	1468 - S682	R4112444	R4112445	-	NR	NR
14,050 lb GVWR / axle 5,290 lb w / 4 wheel disc Reverse Elliot I - Beam / 5,290 lb Capacity	Fd			7603 - D734	MD734	-	-	NR	NR
	Fd			7603 - D734	MD734	-	-	NR	NR
Full floating type / 9,480 lb Capacity	Rd			7603 - D734	MD734	NR	-	NR	NR
	Rd			7603 - D734	MD734	NR	-	NR	NR
2004									
	Ra		321.5mm x 320mm x 75mm	1468 - S682	R4112444	R4112445	-	NR	NR
	Ra		321.5mm x 320mm x 75mm	1468 - S682	R4112444	R4112445	-	NR	NR
14,050 lb GVWR / axle 5,290 lb w / 4 wheel disc Reverse Elliot I - Beam / 5,290 lb Capacity	Fd			7603 - D734	MD734	-	-	NR	NR
	Fd			7603 - D734	MD734	-	-	NR	NR
Full floating type / 9,480 lb Capacity	Rd			7603 - D734	MD734	NR	-	NR	NR
	Rd			7603 - D734	MD734	NR	-	NR	NR
2003									
	Ra		321.5mm x 320mm x 75mm	1468 - S682	R4112444	R4112445	-	NR	NR
	Ra		321.5mm x 320mm x 75mm	1468 - S682	R4112444	R4112445	-	NR	NR
14,050 lb GVWR / axle 5,290 lb w / 4 wheel disc Reverse Elliot I - Beam / 5,290 lb Capacity	Fd			7603 - D734	MD734	-	-	NR	NR
	Fd			7603 - D734	MD734	-	-	NR	NR
Full floating type / 9,480 lb Capacity	Rd			7603 - D734	MD734	NR	-	NR	NR
	Rd			7603 - D734	MD734	NR	-	NR	NR
2002									
	Ra		321.5mm x 320mm x 75mm	1468 - S682	R4112444	R4112445	-	NR	NR
	Ra		321.5mm x 320mm x 75mm	1468 - S682	R4112444	R4112445	-	NR	NR
14,050 lb GVWR / axle 5,290 lb w / 4 wheel disc Reverse Elliot I - Beam / 5,290 lb Capacity	Fd			7603 - D734	MD734	-	-	NR	NR
	Fd			7603 - D734	MD734	-	-	NR	NR
Full floating type / 9,480 lb Capacity	Rd			7603 - D734	MD734	NR	-	NR	NR
	Rd			7603 - D734	MD734	NR	-	NR	NR
2001									
	Ra		321.5mm x 320mm x 75mm	1468 - S682	R4112444	R4112445	-	NR	NR
	Ra		321.5mm x 320mm x 75mm	1468 - S682	R4112444	R4112445	-	NR	NR

329 - Forward

330 - Rearward

MERITOR DRUM OR ROTOR NO.	CALIPER OR CYLINDER BORE SIZE	MERITOR CALIPER OR WHEEL CYLINDER (LEFT)	MERITOR CALIPER OR WHEEL CYLINDER (RIGHT)	MERITOR CALIPER OR WHEEL CYLINDER REPAIR KIT	MERITOR CALIPER PISTON	MERITOR MASTER CYLINDER	MERITOR MASTER CYLINDER KIT	MERITOR BRAKE HOSE (LEFT)	MERITOR BRAKE HOSE (RIGHT)
									MITSUBISHI FUSO(Cont.)
									FE - HD MODEL 639T(Cont.)
R4212432	51mm	R4612433	R4612435	R4112437	N/A	-	-	-	-
R4212438	51mm	R4612440	R4612442	R4112437	N/A	-	-	-	-
R4212438	51mm	R4612439	R4612441	R4112437	N/A	-	-	-	-
									FE - HD MODEL 640, 649
R4612443	1-1/8 "	R4112446	R4112448[329]	N/A	NR	-	-	-	-
R4612443	1-1/8 "	R4112447	R4112449[330]	N/A	NR	-	-	-	-
R4212451	51mm	R4612455	R4612457	R4112437	N/A	-	-	-	-
R4212451	51mm	R4612456	R4612458	R4112437	N/A	-	-	-	-
R4212438	51mm	R4612439	R4612441	R4112437	N/A	-	-	-	-
R4212438	51mm	R4612440	R4612442	R4112437	N/A	-	-	-	-
R4612443	1-1/8 "	R4112447	R4112449[330]	N/A	NR	-	-	-	-
R4612443	1-1/8 "	R4112446	R4112448[329]	N/A	NR	-	-	-	-
R4212451	51mm	R4612456	R4612458	R4112437	N/A	-	-	-	-
R4212451	51mm	R4612455	R4612457	R4112437	N/A	-	-	-	-
R4212438	51mm	R4612440	R4612442	R4112437	N/A	-	-	-	-
R4212438	51mm	R4612439	R4612441	R4112437	N/A	-	-	-	-
R4612443	1-1/8 "	R4112447	R4112449[330]	N/A	NR	-	-	-	-
R4612443	1-1/8 "	R4112446	R4112448[329]	N/A	NR	-	-	-	-
R4212451	51mm	R4612455	R4612457	R4112437	N/A	-	-	-	-
R4212451	51mm	R4612456	R4612458	R4112437	N/A	-	-	-	-
R4212438	51mm	R4612439	R4612441	R4112437	N/A	-	-	-	-
R4212438	51mm	R4612440	R4612442	R4112437	N/A	-	-	-	-
R4612443	1-1/8 "	R4112447	R4112449[330]	N/A	NR	-	-	-	-
R4612443	1-1/8 "	R4112446	R4112448[329]	N/A	NR	-	-	-	-
R4212451	51mm	R4612456	R4612458	R4112437	N/A	-	-	-	-
R4212451	51mm	R4612455	R4612457	R4112437	N/A	-	-	-	-
R4212438	51mm	R4612439	R4612441	R4112437	N/A	-	-	-	-
R4212438	51mm	R4612440	R4612442	R4112437	N/A	-	-	-	-
R4612443	1-1/8 "	R4112447	R4112449[330]	N/A	NR	-	-	-	-
R4612443	1-1/8 "	R4112446	R4112448[329]	N/A	NR	-	-	-	-

MAKE MODEL YEAR AXLE CODE AXLE WEIGHT	AXLE & BRK. TYPE	BRK. MFG.	BRAKE SIZE	FMSI	MERITOR DISC PAD OR BRAKE SHOE	MERITOR GUIDE PIN OR RETURN SPRING KIT	MERITOR CALIPER HWD. KIT OR RETURN SPRING KIT	MERITOR ADJUSTER KIT (LEFT WHEEL)	MERITOR ADJUSTER KIT (RIGHT WHEEL)
MITSUBISHI FUSO(Cont.)									
FE - HD MODEL 640, 649(Cont.)									
2001 14,050 lb GVWR / axle 5,290 lb w / 4 wheel disc Reverse Elliot I - Beam / 5,290 lb Capacity	Fd Fd			7603 - D734 7603 - D734	MD734 MD734	- -	- -	NR NR	NR NR
Full floating type / 9,480 lb Capacity	Rd Rd			7603 - D734 7603 - D734	MD734 MD734	NR NR	- -	NR NR	NR NR
2000	Ra Ra		321.5mm x 320mm x 75mm 321.5mm x 320mm x 75mm	1468 - S682 1468 - S682	R4112444 R4112444	R4112445 R4112445	- -	NR NR	NR NR
14,050 lb GVWR / axle 5,290 lb w / 4 wheel disc Reverse Elliot I - Beam / 5,290 lb Capacity	Fd Fd			7603 - D734 7603 - D734	MD734 MD734	- -	- -	NR NR	NR NR
Full floating type / 9,480 lb Capacity	Rd Rd			7603 - D734 7603 - D734	MD734 MD734	NR NR	- -	NR NR	NR NR
1999	Ra Ra		321.5mm x 320mm x 75mm 321.5mm x 320mm x 75mm	1468 - S682 1468 - S682	R4112444 R4112444	R4112445 R4112445	- -	NR NR	NR NR
14,050 lb GVWR / axle 5,290 lb w / 4 wheel disc Reverse Elliot I - Beam / 5,290 lb Capacity	Fd Fd			7603 - D734 7603 - D734	MD734 MD734	- -	- -	NR NR	NR NR
Full floating type / 9,480 lb Capacity	Rd Rd			7603 - D734 7603 - D734	MD734 MD734	NR NR	- -	NR NR	NR NR
1998	Ra Ra		321.5mm x 320mm x 75mm 321.5mm x 320mm x 75mm	1468 - S682 1468 - S682	R4112444 R4112444	R4112445 R4112445	- -	NR NR	NR NR
14,050 lb GVWR / axle 5,290 lb w / 4 wheel disc Reverse Elliot I - Beam / 5,290 lb Capacity	Fd Fd			7603 - D734 7603 - D734	MD734 MD734	- -	- -	NR NR	NR NR
Full floating type / 9,480 lb Capacity	Rd Rd			7603 - D734 7603 - D734	MD734 MD734	NR NR	- -	NR NR	NR NR
1997	Ra Ra		321.5mm x 320mm x 75mm 321.5mm x 320mm x 75mm	1468 - S682 1468 - S682	R4112444 R4112444	R4112445 R4112445	- -	NR NR	NR NR
14,050 lb GVWR / axle 5,290 lb w / 4 wheel disc Reverse Elliot I - Beam / 5,290 lb Capacity	Fd Fd			7603 - D734 7603 - D734	MD734 MD734	- -	- -	NR NR	NR NR
Full floating type / 9,480 lb Capacity	Rd Rd			7603 - D734 7603 - D734	MD734 MD734	NR NR	- -	NR NR	NR NR
1996	Ra Ra		321.5mm x 320mm x 75mm 321.5mm x 320mm x 75mm	1468 - S682 1468 - S682	R4112444 R4112444	R4112445 R4112445	- -	NR NR	NR NR

329 - Forward

330 - Rearward

MERITOR DRUM OR ROTOR NO.	CALIPER OR CYLINDER BORE SIZE	MERITOR CALIPER OR WHEEL CYLINDER (LEFT)	MERITOR CALIPER OR WHEEL CYLINDER (RIGHT)	MERITOR CALIPER OR WHEEL CYLINDER REPAIR KIT	MERITOR CALIPER PISTON	MERITOR MASTER CYLINDER	MERITOR MASTER CYLINDER KIT	MERITOR BRAKE HOSE (LEFT)	MERITOR BRAKE HOSE (RIGHT)
MITSUBISHI FUSO(Cont.)									
FE - HD MODEL 640, 649(Cont.)									
R4212451	51mm	R4612456	R4612458	R4112437	N/A	-	-	-	-
R4212451	51mm	R4612455	R4612457	R4112437	N/A	-	-	-	-
R4212438	51mm	R4612439	R4612441	R4112437	N/A	-	-	-	-
R4212438	51mm	R4612440	R4612442	R4112437	N/A	-	-	-	-
R4612443	1-1/8 "	R4112446	R4112448[329]	N/A	NR	-	-	-	-
R4612443	1-1/8 "	R4112447	R4112449[330]	N/A	NR	-	-	-	-
R4212451	51mm	R4612455	R4612457	R4112437	N/A	-	-	-	-
R4212451	51mm	R4612456	R4612458	R4112437	N/A	-	-	-	-
R4212438	51mm	R4612439	R4612441	R4112437	N/A	-	-	-	-
R4212438	51mm	R4612440	R4612442	R4112437	N/A	-	-	-	-
R4612443	1-1/8 "	R4112446	R4112448[329]	N/A	NR	-	-	-	-
R4612443	1-1/8 "	R4112447	R4112449[330]	N/A	NR	-	-	-	-
R4212451	51mm	R4612455	R4612457	R4112437	N/A	-	-	-	-
R4212451	51mm	R4612456	R4612458	R4112437	N/A	-	-	-	-
R4212438	51mm	R4612439	R4612441	R4112437	N/A	-	-	-	-
R4212438	51mm	R4612440	R4612442	R4112437	N/A	-	-	-	-
R4612443	1-1/8 "	R4112446	R4112448[329]	N/A	NR	-	-	-	-
R4612443	1-1/8 "	R4112447	R4112449[330]	N/A	NR	-	-	-	-
R4212451	51mm	R4612456	R4612458	R4112437	N/A	-	-	-	-
R4212451	51mm	R4612455	R4612457	R4112437	N/A	-	-	-	-
R4212438	51mm	R4612440	R4612442	R4112437	N/A	-	-	-	-
R4212438	51mm	R4612439	R4612441	R4112437	N/A	-	-	-	-
R4612443	1-1/8 "	R4112446	R4112448[329]	N/A	NR	-	-	-	-
R4612443	1-1/8 "	R4112447	R4112449[330]	N/A	NR	-	-	-	-
R4212451	51mm	R4612455	R4612457	R4112437	N/A	-	-	-	-
R4212451	51mm	R4612456	R4612458	R4112437	N/A	-	-	-	-
R4212438	51mm	R4612439	R4612441	R4112437	N/A	-	-	-	-
R4212438	51mm	R4612440	R4612442	R4112437	N/A	-	-	-	-
R4612443	1-1/8 "	R4112446	R4112448[329]	N/A	NR	-	-	-	-
R4612443	1-1/8 "	R4112447	R4112449[330]	N/A	NR	-	-	-	-

MAKE MODEL YEAR AXLE CODE AXLE WEIGHT	AXLE & BRK. TYPE	BRK. MFG.	BRAKE SIZE	FMSI	MERITOR DISC PAD OR BRAKE SHOE	MERITOR GUIDE PIN OR RETURN SPRING KIT	MERITOR CALIPER HWD. KIT OR RETURN SPRING KIT	MERITOR ADJUSTER KIT (LEFT WHEEL)	MERITOR ADJUSTER KIT (RIGHT WHEEL)
MITSUBISHI FUSO(Cont.)									
FE - HD MODEL 640, 649(Cont.)									
1996 14,050 lb GVWR / axle 5,290 lb w / 4 wheel disc Reverse Elliot I - Beam / 5,290 lb Capacity	Fd Fd			7603 - D734 7603 - D734	MD734 MD734	- -	- -	NR NR	NR NR
Full floating type / 9,480 lb Capacity	Rd Rd			7603 - D734 7603 - D734	MD734 MD734	NR NR	- -	NR NR	NR NR
1995	Ra Ra		321.5mm x 320mm x 75mm 321.5mm x 320mm x 75mm	1468 - S682 1468 - S682	R4112444 R4112444	R4112445 R4112445	- -	NR NR	NR NR
14,050 lb GVWR / axle 5,290 lb w / 4 wheel disc Reverse Elliot I - Beam / 5,290 lb Capacity	Fd Fd			7603 - D734 7603 - D734	MD734 MD734	- -	- -	NR NR	NR NR
Full floating type / 9,480 lb Capacity	Rd Rd			7603 - D734 7603 - D734	MD734 MD734	NR NR	- -	NR NR	NR NR
FG									
1993	Fm Rm		320mm x 75mm 320mm x 75mm	1467 - S682 1467 - S682	R469831 R469831	R409855 R409855	R409856 R409856	N/A N/A	N/A N/A
1992	Fm Rm		320mm x 75mm 320mm x 75mm	1467 - S682 1467 - S682	R469831 R469831	R409855 R409855	R409856 R409856	N/A N/A	N/A N/A
1991	Fm Rm		320mm x 75mm 320mm x 75mm	1467 - S682 1467 - S682	R469831 R469831	R409855 R409855	R409856 R409856	N/A N/A	N/A N/A
1990	Fm Rm		320mm x 75mm 320mm x 75mm	1467 - S682 1467 - S682	R469831 R469831	R409855 R409855	R409856 R409856	N/A N/A	N/A N/A
FG 4 X 4									
2001 12,000 lb GVWR Single-reduction Hypod gear Ratio 5.714 5,510 lb	Fa	ABS Vacuum servo assist	321.5mm x 320mm x 75mm	1468 - S682	R4112444	R4112445	-	NR	NR
12,000 lb GVWR Single-reduction Hypod gear Ratio 5.714 (limited slip differential optional) 8,600 lb	Ra	ABS Vacuum servo assist	321.5mm x 320mm x 75mm	1468 - S682	R4112444	R4112445	-	NR	NR
2000 12,000 lb GVWR Single-reduction Hypod gear Ratio 5.714 5,510 lb	Fa	ABS Vacuum servo assist	321.5mm x 320mm x 75mm	1468 - S682	R4112444	R4112445	-	NR	NR
12,000 lb GVWR Single-reduction Hypod gear Ratio 5.714 (limited slip differential optional) 8,600 lb	Ra	ABS Vacuum servo assist	321.5mm x 320mm x 75mm	1468 - S682	R4112444	R4112445	-	NR	NR
1999 12,000 lb GVWR Single-reduction Hypod gear Ratio 5.714 5,510 lb	Fa	ABS Vacuum servo assist	321.5mm x 320mm x 75mm	1468 - S682	R4112444	R4112445	-	NR	NR
12,000 lb GVWR Single-reduction Hypod gear Ratio 5.714 (limited slip differential optional) 8,600 lb	Ra	ABS Vacuum servo assist	321.5mm x 320mm x 75mm	1468 - S682	R4112444	R4112445	-	NR	NR

329 - Forward 330 - Rearward

MERITOR DRUM OR ROTOR NO.	CALIPER OR CYLINDER BORE SIZE	MERITOR CALIPER OR WHEEL CYLINDER (LEFT)	MERITOR CALIPER OR WHEEL CYLINDER (RIGHT)	MERITOR CALIPER OR WHEEL CYLINDER REPAIR KIT	MERITOR CALIPER PISTON	MERITOR MASTER CYLINDER	MERITOR MASTER CYLINDER KIT	MERITOR BRAKE HOSE (LEFT)	MERITOR BRAKE HOSE (RIGHT)
MITSUBISHI FUSO(Cont.)									
FE - HD MODEL 640, 649(Cont.)									
R4212451	51mm	R4612456	R4612458	R4112437	N/A	-	-	-	-
R4212451	51mm	R4612455	R4612457	R4112437	N/A	-	-	-	-
R4212438	51mm	R4612439	R4612441	R4112437	N/A	-	-	-	-
R4212438	51mm	R4612440	R4612442	R4112437	N/A	-	-	-	-
R4612443	1-1/8 "	R4112446	R4112448[329]	N/A	NR	-	-	-	-
R4612443	1-1/8 "	R4112447	R4112449[330]	N/A	NR	-	-	-	-
R4212451	51mm	R4612455	R4612457	R4112437	N/A	-	-	-	-
R4212451	51mm	R4612456	R4612458	R4112437	N/A	-	-	-	-
R4212438	51mm	R4612439	R4612441	R4112437	N/A	-	-	-	-
R4212438	51mm	R4612440	R4612442	R4112437	N/A	-	-	-	-
FG									
N/A		N/A	N/A	N/A	NR	-	-	-	-
N/A		N/A	N/A	N/A	NR	-	-	-	-
N/A		N/A	N/A	N/A	NR	-	-	-	-
N/A		N/A	N/A	N/A	NR	-	-	-	-
N/A		N/A	N/A	N/A	NR	-	-	-	-
N/A		N/A	N/A	N/A	NR	-	-	-	-
N/A		N/A	N/A	N/A	NR	-	-	-	-
N/A		N/A	N/A	N/A	NR	-	-	-	-
FG 4 X 4									
R4612443		-	-	-	-	-	-	-	-
R4612443		-	-	-	-	-	-	-	-
R4612443		-	-	-	-	-	-	-	-
R4612443		-	-	-	-	-	-	-	-
R4612443		-	-	-	-	-	-	-	-
R4612443		-	-	-	-	-	-	-	-

MAKE MODEL YEAR AXLE CODE AXLE WEIGHT	AXLE & BRK. TYPE	BRK. MFG.	BRAKE SIZE	FMSI	MERITOR DISC PAD OR BRAKE SHOE	MERITOR GUIDE PIN OR RETURN SPRING KIT	MERITOR CALIPER HWD. KIT OR RETURN SPRING KIT	MERITOR ADJUSTER KIT (LEFT WHEEL)	MERITOR ADJUSTER KIT (RIGHT WHEEL)
MITSUBISHI FUSO(Cont.)									
FG 4 X 4(Cont.)									
1998 12,000 lb GVWR Single-reduction Hypod gear Ratio 5.714 5,510 lb	Fa	ABS Vacuum servo assist	321.5mm x 320mm x 75mm	1468 - S682	R4112444	R4112445	-	NR	NR
12,000 lb GVWR Single-reduction Hypod gear Ratio 5.714 (limited slip differential optional) 8,600 lb	Ra	ABS Vacuum servo assist	321.5mm x 320mm x 75mm	1468 - S682	R4112444	R4112445	-	NR	NR
1997 12,000 lb GVWR Single-reduction Hypod gear Ratio 5.714 5,510 lb	Fa	ABS Vacuum servo assist	321.5mm x 320mm x 75mm	1468 - S682	R4112444	R4112445	-	NR	NR
12,000 lb GVWR Single-reduction Hypod gear Ratio 5.714 (limited slip differential optional) 8,600 lb	Ra	ABS Vacuum servo assist	321.5mm x 320mm x 75mm	1468 - S682	R4112444	R4112445	-	NR	NR
1996 12,000 lb GVWR Single-reduction Hypod gear Ratio 5.714 5,510 lb	Fa	ABS Vacuum servo assist	321.5mm x 320mm x 75mm	1468 - S682	R4112444	R4112445	-	NR	NR
12,000 lb GVWR Single-reduction Hypod gear Ratio 5.714 (limited slip differential optional) 8,600 lb	Ra	ABS Vacuum servo assist	321.5mm x 320mm x 75mm	1468 - S682	R4112444	R4112445	-	NR	NR
1995 12,000 lb GVWR Single-reduction Hypod gear Ratio 5.714 5,510 lb	Fa	ABS Vacuum servo assist	321.5mm x 320mm x 75mm	1468 - S682	R4112444	R4112445	-	NR	NR
12,000 lb GVWR Single-reduction Hypod gear Ratio 5.714 (limited slip differential optional) 8,600 lb	Ra	ABS Vacuum servo assist	321.5mm x 320mm x 75mm	1468 - S682	R4112444	R4112445	-	NR	NR
1994 12,000 lb GVWR Single-reduction Hypod gear Ratio 5.714 5,510 lb	Fa	ABS Vacuum servo assist	321.5mm x 320mm x 75mm	1468 - S682	R4112444	R4112445	-	NR	NR
12,000 lb GVWR Single-reduction Hypod gear Ratio 5.714 (limited slip differential optional) 8,600 lb	Ra	ABS Vacuum servo assist	321.5mm x 320mm x 75mm	1468 - S682	R4112444	R4112445	-	NR	NR
1993 12,000 lb GVWR Single-reduction Hypod gear Ratio 5.714 5,510 lb	Fa	ABS Vacuum servo assist	321.5mm x 320mm x 75mm	1468 - S682	R4112444	R4112445	-	NR	NR
12,000 lb GVWR Single-reduction Hypod gear Ratio 5.714 (limited slip differential optional) 8,600 lb	Ra	ABS Vacuum servo assist	321.5mm x 320mm x 75mm	1468 - S682	R4112444	R4112445	-	NR	NR
1992 12,000 lb GVWR Single-reduction Hypod gear Ratio 5.714 5,510 lb	Fa	ABS Vacuum servo assist	321.5mm x 320mm x 75mm	1468 - S682	R4112444	R4112445	-	NR	NR

MERITOR DRUM OR ROTOR NO.	CALIPER OR CYLINDER BORE SIZE	MERITOR CALIPER OR WHEEL CYLINDER (LEFT)	MERITOR CALIPER OR WHEEL CYLINDER (RIGHT)	MERITOR CALIPER OR WHEEL CYLINDER REPAIR KIT	MERITOR CALIPER PISTON	MERITOR MASTER CYLINDER	MERITOR MASTER CYLINDER KIT	MERITOR BRAKE HOSE (LEFT)	MERITOR BRAKE HOSE (RIGHT)
MITSUBISHI FUSO(Cont.)									
FG 4 X 4(Cont.)									
R4612443		-	-	-	-	-	-	-	-
R4612443		-	-	-	-	-	-	-	-
R4612443		-	-	-	-	-	-	-	-
R4612443		-	-	-	-	-	-	-	-
R4612443		-	-	-	-	-	-	-	-
R4612443		-	-	-	-	-	-	-	-
R4612443		-	-	-	-	-	-	-	-
R4612443		-	-	-	-	-	-	-	-
R4612443		-	-	-	-	-	-	-	-
R4612443		-	-	-	-	-	-	-	-
R4612443		-	-	-	-	-	-	-	-
R4612443		-	-	-	-	-	-	-	-
R4612443		-	-	-	-	-	-	-	-

MAKE MODEL YEAR AXLE CODE AXLE WEIGHT	AXLE & BRK. TYPE	BRK. MFG.	BRAKE SIZE	FMSI	MERITOR DISC PAD OR BRAKE SHOE	MERITOR GUIDE PIN OR RETURN SPRING KIT	MERITOR CALIPER HWD. KIT OR RETURN SPRING KIT	MERITOR ADJUSTER KIT (LEFT WHEEL)	MERITOR ADJUSTER KIT (RIGHT WHEEL)
MITSUBISHI FUSO(Cont.)									
FG 4 X 4(Cont.)									
1992 12,000 lb GVWR Single-reduction Hypod gear Ratio 5.714 (limited slip differential optional) 8,600 lb	Ra	ABS Vacuum servo assist	321.5mm x 320mm x 75mm	1468 - S682	R4112444	R4112445	-	NR	NR
1991 12,000 lb GVWR Single-reduction Hypod gear Ratio 5.714 5,510 lb	Fa	ABS Vacuum servo assist	321.5mm x 320mm x 75mm	1468 - S682	R4112444	R4112445	-	NR	NR
12,000 lb GVWR Single-reduction Hypod gear Ratio 5.714 (limited slip differential optional) 8,600 lb	Ra	ABS Vacuum servo assist	321.5mm x 320mm x 75mm	1468 - S682	R4112444	R4112445	-	NR	NR
FH									
1993	Fm		320mm x 110mm	1410 - S602	R467406	R409841	R409842	N/A	N/A
	Rm		320mm x 130mm	1434 - S632	R469824	R409845	R409846	N/A	N/A
1992	Fm		320mm x 110mm	1410 - S602	R467406	R409841	R409842	N/A	N/A
	Rm		320mm x 130mm	1434 - S632	R469824	R409845	R409846	N/A	N/A
1991	Fm		320mm x 110mm	1410 - S602	R467406	R409841	R409842	N/A	N/A
	Rm		320mm x 130mm	1434 - S632	R469824	R409845	R409846	N/A	N/A
1990	Fm		320mm x 110mm	1410 - S602	R467406	R409841	R409842	N/A	N/A
	Rm		320mm x 130mm	1434 - S632	R469824	R409845	R409846	N/A	N/A
1989	Fm		320mm x 110mm	1410 - S602	R467406	R409841	R409842	N/A	N/A
	Rm		320mm x 130mm	1434 - S632	R469824	R409845	R409846	N/A	N/A
1988	Fm		320mm x 110mm	1410 - S602	R467406	R409841	R409842	N/A	N/A
	Rm		320mm x 130mm	1434 - S632	R469824	R409845	R409846	N/A	N/A
FK									
1994	Fm		400mm x 120mm	1422 - S617	R467410	R409843	R409844	N/A	N/A
	Rm		410mm x 154mm	1419 - S686	R467408	R409853	R409844	N/A	N/A
NISSAN UD									
1100 SERIES									
1991	Fa		320mm x 65mm	1465 - S680	R469829	R409859	R409860	N/A	N/A
	Ra		320mm x 65mm	1465 - S680	R469829	R409859	R409860	N/A	N/A
1990	Fa		320mm x 65mm	1465 - S680	R469829	R409859	R409860	N/A	N/A
	Ra		320mm x 65mm	1465 - S680	R469829	R409859	R409860	N/A	N/A
1989	Fa		320mm x 65mm	1465 - S680	R469829	R409859	R409860	N/A	N/A
	Ra		320mm x 65mm	1465 - S680	R469829	R409859	R409860	N/A	N/A
1200 SERIES									
2002	Fd			7527 - D646	MD646	N/A	N/A	NR	NR
	Ra		320mm x 90mm	1478 - S695	R4612461	R409857	R409858	N/A	N/A
2001	Fd			7527 - D646	MD646	N/A	N/A	NR	NR
	Ra		320mm x 90mm	1478 - S695	R4612461	R409857	R409858	N/A	N/A
2000	Fd			7527 - D646	MD646	N/A	N/A	NR	NR
	Ra		320mm x 90mm	1478 - S695	R4612461	R409857	R409858	N/A	N/A
1999	Fd			7527 - D646	MD646	N/A	N/A	NR	NR

MERITOR DRUM OR ROTOR NO.	CALIPER OR CYLINDER BORE SIZE	MERITOR CALIPER OR WHEEL CYLINDER (LEFT)	MERITOR CALIPER OR WHEEL CYLINDER (RIGHT)	MERITOR CALIPER OR WHEEL CYLINDER REPAIR KIT	MERITOR CALIPER PISTON	MERITOR MASTER CYLINDER	MERITOR MASTER CYLINDER KIT	MERITOR BRAKE HOSE (LEFT)	MERITOR BRAKE HOSE (RIGHT)
MITSUBISHI FUSO(Cont.)									
FG 4 X 4(Cont.)									
R4612443		-	-	-	-	-	-	-	-
R4612443		-	-	-	-	-	-	-	-
R4612443		-	-	-	-	-	-	-	-
FH									
N/A		N/A	N/A	N/A	NR	-	-	-	-
N/A		N/A	N/A	N/A	NR	-	-	-	-
N/A		N/A	N/A	N/A	NR	-	-	-	-
N/A		N/A	N/A	N/A	NR	-	-	-	-
N/A		N/A	N/A	N/A	NR	-	-	-	-
N/A		N/A	N/A	N/A	NR	-	-	-	-
N/A		N/A	N/A	N/A	NR	-	-	-	-
N/A		N/A	N/A	N/A	NR	-	-	-	-
N/A		N/A	N/A	N/A	NR	-	-	-	-
N/A		N/A	N/A	N/A	NR	-	-	-	-
FK									
N/A		N/A	N/A	N/A	NR	-	-	-	-
N/A		N/A	N/A	N/A	NR	-	-	-	-
NISSAN UD									
1100 SERIES									
N/A	N/A	N/A	N/A	N/A	NR	-	-	-	-
N/A	N/A	N/A	N/A	N/A	NR	-	-	-	-
N/A	N/A	N/A	N/A	N/A	NR	-	-	-	-
N/A	N/A	N/A	N/A	N/A	NR	-	-	-	-
N/A	N/A	N/A	N/A	N/A	NR	-	-	-	-
N/A	N/A	N/A	N/A	N/A	NR	-	-	-	-
1200 SERIES									
R4212454	54mm	R4612459	R4612460	N/A	N/A	-	-	-	-
N/A	N/A	N/A	N/A	N/A	NR	-	-	-	-
R4212454	54mm	R4612459	R4612460	N/A	N/A	-	-	-	-
N/A	N/A	N/A	N/A	N/A	NR	-	-	-	-
R4212454	54mm	R4612459	R4612460	N/A	N/A	-	-	-	-
N/A	N/A	N/A	N/A	N/A	NR	-	-	-	-
R4212454	54mm	R4612459	R4612460	N/A	N/A	-	-	-	-

MAKE MODEL YEAR AXLE CODE AXLE WEIGHT	AXLE & BRK. TYPE	BRK. MFG.	BRAKE SIZE	FMSI	MERITOR DISC PAD OR BRAKE SHOE	MERITOR GUIDE PIN OR RETURN SPRING KIT	MERITOR CALIPER HWD. KIT OR RETURN SPRING KIT	MERITOR ADJUSTER KIT (LEFT WHEEL)	MERITOR ADJUSTER KIT (RIGHT WHEEL)
NISSAN UD(Cont.)									
1200 SERIES(Cont.)									
1999	Ra		320mm x 90mm	1478 - S695	R4612461	R409857	R409858	N/A	N/A
1300 SERIES									
1992	Fa		320mm x 75mm	1466 - S681	R469830	R409859	R409860	N/A	N/A
	Ra		320mm x 75mm	1466 - S681	R469830	R409859	R409860	N/A	N/A
1400 SERIES									
1994	Fd			7527 - D646	MD646	N/A	N/A	NR	NR
	Ra		320mm x 90mm	1478 - S695	R469832	R409857	R409858	N/A	N/A
2600 SERIES									
1994	Fa		400mm x 120mm	1422 - S617	R467410	R409843	R409844	N/A	N/A
	Ra		410mm x 154mm	1419 - S614	R467408	R409853	R409844	N/A	N/A
1993	Fa		400mm x 120mm	1422 - S617	R467410	R409843	R409844	N/A	N/A
	Ra		410mm x 154mm	1419 - S614	R467408	R409853	R409844	N/A	N/A
1992	Fa		400mm x 120mm	1422 - S617	R467410	R409843	R409844	N/A	N/A
	Ra		410mm x 154mm	1419 - S614	R467408	R409853	R409844	N/A	N/A
1991	Fa		400mm x 120mm	1422 - S617	R467410	R409843	R409844	N/A	N/A
	Ra		410mm x 154mm	1419 - S614	R467408	R409853	R409844	N/A	N/A
1990	Fa		400mm x 120mm	1422 - S617	R467410	R409843	R409844	N/A	N/A
	Ra		410mm x 154mm	1419 - S614	R467408	R409853	R409844	N/A	N/A
1989	Fa		400mm x 120mm	1422 - S617	R467410	R409843	R409844	N/A	N/A
	Ra		410mm x 154mm	1419 - S614	R467408	R409853	R409844	N/A	N/A
1988	Fa		400mm x 120mm	1422 - S617	R467410	R409843	R409844	N/A	N/A
	Ra		410mm x 154mm	1419 - S614	R467408	R409853	R409844	N/A	N/A
1987	Fa		400mm x 120mm	1422 - S617	R467410	R409843	R409844	N/A	N/A
	Ra		410mm x 154mm	1419 - S614	R467408	R409853	R409844	N/A	N/A
1986	Fa		400mm x 120mm	1422 - S617	R467410	R409843	R409844	N/A	N/A
	Ra		410mm x 154mm	1419 - S614	R467408	R409853	R409844	N/A	N/A
1985	Fa		400mm x 120mm	1422 - S617	R467410	R409843	R409844	N/A	N/A
	Ra		410mm x 154mm	1419 - S614	R467408	R409853	R409844	N/A	N/A
1984	Fa		400mm x 120mm	1422 - S617	R467410	R409843	R409844	N/A	N/A
	Ra		410mm x 154mm	1419 - S614	R467408	R409853	R409844	N/A	N/A
2800 SERIES									
1994	Fa		400mm x 120mm	1422 - S617	R467410	R409843	R409844	N/A	N/A
	Ra		410mm x 154mm	1419 - S614	R467408	R409853	R409844	N/A	N/A
1993	Fa		400mm x 120mm	1422 - S617	R467410	R409843	R409844	N/A	N/A
	Ra		410mm x 154mm	1419 - S614	R467408	R409853	R409844	N/A	N/A
1992	Fa		400mm x 120mm	1422 - S617	R467410	R409843	R409844	N/A	N/A
	Ra		410mm x 154mm	1419 - S614	R467408	R409853	R409844	N/A	N/A
1991	Fa		400mm x 120mm	1422 - S617	R467410	R409843	R409844	N/A	N/A
	Ra		410mm x 154mm	1419 - S614	R467408	R409853	R409844	N/A	N/A
1990	Fa		400mm x 120mm	1422 - S617	R467410	R409843	R409844	N/A	N/A
	Ra		410mm x 154mm	1419 - S614	R467408	R409853	R409844	N/A	N/A
1989	Fa		400mm x 120mm	1422 - S617	R467410	R409843	R409844	N/A	N/A

MERITOR DRUM OR ROTOR NO.	CALIPER OR CYLINDER BORE SIZE	MERITOR CALIPER OR WHEEL CYLINDER (LEFT)	MERITOR CALIPER OR WHEEL CYLINDER (RIGHT)	MERITOR CALIPER OR WHEEL CYLINDER REPAIR KIT	MERITOR CALIPER PISTON	MERITOR MASTER CYLINDER	MERITOR MASTER CYLINDER KIT	MERITOR BRAKE HOSE (LEFT)	MERITOR BRAKE HOSE (RIGHT)
									NISSAN UD(Cont.)
									1200 SERIES(Cont.)
N/A	N/A	N/A	N/A	N/A	NR	-	-	-	-
									1300 SERIES
N/A	N/A	N/A	N/A	N/A	NR	-	-	-	-
N/A	N/A	N/A	N/A	N/A	NR	-	-	-	-
									1400 SERIES
N/A	N/A	N/A	N/A	N/A	N/A	-	-	-	-
N/A	N/A	N/A	N/A	N/A	NR	-	-	-	-
									2600 SERIES
N/A	N/A	N/A	N/A	N/A	NR	-	-	-	-
N/A	N/A	N/A	N/A	N/A	NR	-	-	-	-
N/A	N/A	N/A	N/A	N/A	NR	-	-	-	-
N/A	N/A	N/A	N/A	N/A	NR	-	-	-	-
N/A	N/A	N/A	N/A	N/A	NR	-	-	-	-
N/A	N/A	N/A	N/A	N/A	NR	-	-	-	-
N/A	N/A	N/A	N/A	N/A	NR	-	-	-	-
N/A	N/A	N/A	N/A	N/A	NR	-	-	-	-
N/A	N/A	N/A	N/A	N/A	NR	-	-	-	-
N/A	N/A	N/A	N/A	N/A	NR	-	-	-	-
N/A	N/A	N/A	N/A	N/A	NR	-	-	-	-
N/A	N/A	N/A	N/A	N/A	NR	-	-	-	-
N/A	N/A	N/A	N/A	N/A	NR	-	-	-	-
N/A	N/A	N/A	N/A	N/A	NR	-	-	-	-
N/A	N/A	N/A	N/A	N/A	NR	-	-	-	-
N/A	N/A	N/A	N/A	N/A	NR	-	-	-	-
N/A	N/A	N/A	N/A	N/A	NR	-	-	-	-
N/A	N/A	N/A	N/A	N/A	NR	-	-	-	-
N/A	N/A	N/A	N/A	N/A	NR	-	-	-	-
									2800 SERIES
N/A	N/A	N/A	N/A	N/A	NR	-	-	-	-
N/A	N/A	N/A	N/A	N/A	NR	-	-	-	-
N/A	N/A	N/A	N/A	N/A	NR	-	-	-	-
N/A	N/A	N/A	N/A	N/A	NR	-	-	-	-
N/A	N/A	N/A	N/A	N/A	NR	-	-	-	-
N/A	N/A	N/A	N/A	N/A	NR	-	-	-	-
N/A	N/A	N/A	N/A	N/A	NR	-	-	-	-
N/A	N/A	N/A	N/A	N/A	NR	-	-	-	-
N/A	N/A	N/A	N/A	N/A	NR	-	-	-	-
N/A	N/A	N/A	N/A	N/A	NR	-	-	-	-

MAKE MODEL YEAR AXLE CODE AXLE WEIGHT	AXLE & BRK. TYPE	BRK. MFG.	BRAKE SIZE	FMSI	MERITOR DISC PAD OR BRAKE SHOE	MERITOR GUIDE PIN OR RETURN SPRING KIT	MERITOR CALIPER HWD. KIT OR RETURN SPRING KIT	MERITOR ADJUSTER KIT (LEFT WHEEL)	MERITOR ADJUSTER KIT (RIGHT WHEEL)
NISSAN UD(Cont.)									
2800 SERIES(Cont.)									
1989	Ra		410mm x 154mm	1419 - S614	R467408	R409853	R409844	N/A	N/A
1988	Fa		400mm x 120mm	1422 - S617	R467410	R409843	R409844	N/A	N/A
	Ra		410mm x 154mm	1419 - S614	R467408	R409853	R409844	N/A	N/A
1987	Fa		400mm x 120mm	1422 - S617	R467410	R409843	R409844	N/A	N/A
	Ra		410mm x 154mm	1419 - S614	R467408	R409853	R409844	N/A	N/A
1986	Fa		400mm x 120mm	1422 - S617	R467410	R409843	R409844	N/A	N/A
	Ra		410mm x 154mm	1419 - S614	R467408	R409853	R409844	N/A	N/A
1985	Fa		400mm x 120mm	1422 - S617	R467410	R409843	R409844	N/A	N/A
	Ra		410mm x 154mm	1419 - S614	R467408	R409853	R409844	N/A	N/A
1984	Fa		400mm x 120mm	1422 - S617	R467410	R409843	R409844	N/A	N/A
	Ra		410mm x 154mm	1419 - S614	R467408	R409853	R409844	N/A	N/A
3000, 3000HD, 3000SD SERIES									
1994	Fa		400mm x 120mm	1422 - S617	R467410	R409843	R409844	N/A	N/A
	Ra		410mm x 154mm	1419 - S614	R467408	R409853	R409844	N/A	N/A
1993	Fa		400mm x 120mm	1422 - S617	R467410	R409843	R409844	N/A	N/A
	Ra		410mm x 154mm	1419 - S614	R467408	R409853	R409844	N/A	N/A
1992	Fa		400mm x 120mm	1422 - S617	R467410	R409843	R409844	N/A	N/A
	Ra		410mm x 154mm	1419 - S614	R467408	R409853	R409844	N/A	N/A
1991	Fa		400mm x 120mm	1422 - S617	R467410	R409843	R409844	N/A	N/A
	Ra		410mm x 154mm	1419 - S614	R467408	R409853	R409844	N/A	N/A
1990	Fa		400mm x 120mm	1422 - S617	R467410	R409843	R409844	N/A	N/A
	Ra		410mm x 154mm	1419 - S614	R467408	R409853	R409844	N/A	N/A
1989	Fa		400mm x 120mm	1422 - S617	R467410	R409843	R409844	N/A	N/A
	Ra		410mm x 154mm	1419 - S614	R467408	R409853	R409844	N/A	N/A
1988	Fa		400mm x 120mm	1422 - S617	R467410	R409843	R409844	N/A	N/A
	Ra		410mm x 154mm	1419 - S614	R467408	R409853	R409844	N/A	N/A
1987	Fa		400mm x 120mm	1422 - S617	R467410	R409843	R409844	N/A	N/A
	Ra		410mm x 154mm	1419 - S614	R467408	R409853	R409844	N/A	N/A
1986	Fa		400mm x 120mm	1422 - S617	R467410	R409843	R409844	N/A	N/A
	Ra		410mm x 154mm	1419 - S614	R467408	R409853	R409844	N/A	N/A
1985	Fa		400mm x 120mm	1422 - S617	R467410	R409843	R409844	N/A	N/A
	Ra		410mm x 154mm	1419 - S614	R467408	R409853	R409844	N/A	N/A
1984	Fa		400mm x 120mm	1422 - S617	R467410	R409843	R409844	N/A	N/A
	Ra		410mm x 154mm	1419 - S614	R467408	R409853	R409844	N/A	N/A
CLA-83									
1994	Fa		370mm x 100mm	1411 - S603	R409864	R409843	R409844	N/A	N/A
	Ra		370mm x 135mm	1412 - S604	R467407	R409843	R409844	N/A	N/A
1993	Fa		370mm x 100mm	1411 - S603	R409864	R409843	R409844	N/A	N/A
	Ra		370mm x 135mm	1412 - S604	R467407	R409843	R409844	N/A	N/A
1992	Fa		370mm x 100mm	1411 - S603	R409864	R409843	R409844	N/A	N/A
	Ra		370mm x 135mm	1412 - S604	R467407	R409843	R409844	N/A	N/A
1991	Fa		370mm x 100mm	1411 - S603	R409864	R409843	R409844	N/A	N/A

MERITOR DRUM OR ROTOR NO.	CALIPER OR CYLINDER BORE SIZE	MERITOR CALIPER OR WHEEL CYLINDER (LEFT)	MERITOR CALIPER OR WHEEL CYLINDER (RIGHT)	MERITOR CALIPER OR WHEEL CYLINDER REPAIR KIT	MERITOR CALIPER PISTON	MERITOR MASTER CYLINDER	MERITOR MASTER CYLINDER KIT	MERITOR BRAKE HOSE (LEFT)	MERITOR BRAKE HOSE (RIGHT)
NISSAN UD(Cont.)									
2800 SERIES(Cont.)									
N/A	N/A	N/A	N/A	N/A	NR	-	-	-	-
N/A	N/A	N/A	N/A	N/A	NR	-	-	-	-
N/A	N/A	N/A	N/A	N/A	NR	-	-	-	-
N/A	N/A	N/A	N/A	N/A	NR	-	-	-	-
N/A	N/A	N/A	N/A	N/A	NR	-	-	-	-
N/A	N/A	N/A	N/A	N/A	NR	-	-	-	-
N/A	N/A	N/A	N/A	N/A	NR	-	-	-	-
N/A	N/A	N/A	N/A	N/A	NR	-	-	-	-
N/A	N/A	N/A	N/A	N/A	NR	-	-	-	-
N/A	N/A	N/A	N/A	N/A	NR	-	-	-	-
3000, 3000HD, 3000SD SERIES									
N/A	N/A	N/A	N/A	N/A	NR	-	-	-	-
N/A	N/A	N/A	N/A	N/A	NR	-	-	-	-
N/A	N/A	N/A	N/A	N/A	NR	-	-	-	-
N/A	N/A	N/A	N/A	N/A	NR	-	-	-	-
N/A	N/A	N/A	N/A	N/A	NR	-	-	-	-
N/A	N/A	N/A	N/A	N/A	NR	-	-	-	-
N/A	N/A	N/A	N/A	N/A	NR	-	-	-	-
N/A	N/A	N/A	N/A	N/A	NR	-	-	-	-
N/A	N/A	N/A	N/A	N/A	NR	-	-	-	-
N/A	N/A	N/A	N/A	N/A	NR	-	-	-	-
N/A	N/A	N/A	N/A	N/A	NR	-	-	-	-
N/A	N/A	N/A	N/A	N/A	NR	-	-	-	-
N/A	N/A	N/A	N/A	N/A	NR	-	-	-	-
N/A	N/A	N/A	N/A	N/A	NR	-	-	-	-
N/A	N/A	N/A	N/A	N/A	NR	-	-	-	-
N/A	N/A	N/A	N/A	N/A	NR	-	-	-	-
N/A	N/A	N/A	N/A	N/A	NR	-	-	-	-
N/A	N/A	N/A	N/A	N/A	NR	-	-	-	-
CLA-83									
N/A	N/A	N/A	N/A	N/A	NR	-	-	-	-
N/A	N/A	N/A	N/A	N/A	NR	-	-	-	-
N/A	N/A	N/A	N/A	N/A	NR	-	-	-	-
N/A	N/A	N/A	N/A	N/A	NR	-	-	-	-
N/A	N/A	N/A	N/A	N/A	NR	-	-	-	-
N/A	N/A	N/A	N/A	N/A	NR	-	-	-	-
N/A	N/A	N/A	N/A	N/A	NR	-	-	-	-

MAKE MODEL YEAR AXLE CODE AXLE WEIGHT	AXLE & BRK. TYPE	BRK. MFG.	BRAKE SIZE	FMSI	MERITOR DISC PAD OR BRAKE SHOE	MERITOR GUIDE PIN OR RETURN SPRING KIT	MERITOR CALIPER HWD. KIT OR RETURN SPRING KIT	MERITOR ADJUSTER KIT (LEFT WHEEL)	MERITOR ADJUSTER KIT (RIGHT WHEEL)
NISSAN UD(Cont.)									
CLA-83(Cont.)									
1991	Ra		370mm x 135mm	1412 - S604	R467407	R409843	R409844	N/A	N/A
1990	Fa		370mm x 100mm	1411 - S603	R409864	R409843	R409844	N/A	N/A
	Ra		370mm x 135mm	1412 - S604	R467407	R409843	R409844	N/A	N/A
1989	Fa		370mm x 100mm	1411 - S603	R409864	R409843	R409844	N/A	N/A
	Ra		370mm x 135mm	1412 - S604	R467407	R409843	R409844	N/A	N/A
1988	Fa		370mm x 100mm	1411 - S603	R409864	R409843	R409844	N/A	N/A
	Ra		370mm x 135mm	1412 - S604	R467407	R409843	R409844	N/A	N/A
1987	Fa		370mm x 100mm	1411 - S603	R409864	R409843	R409844	N/A	N/A
	Ra		370mm x 135mm	1412 - S604	R467407	R409843	R409844	N/A	N/A
CLE-87									
1994	Fa		370mm x 100mm	1411 - S603	R409864	R409843	R409844	N/A	N/A
	Ra		370mm x 135mm	1412 - S604	R467407	R409843	R409844	N/A	N/A
1993	Fa		370mm x 100mm	1411 - S603	R409864	R409843	R409844	N/A	N/A
	Ra		370mm x 135mm	1412 - S604	R467407	R409843	R409844	N/A	N/A
1992	Fa		370mm x 100mm	1411 - S603	R409864	R409843	R409844	N/A	N/A
	Ra		370mm x 135mm	1412 - S604	R467407	R409843	R409844	N/A	N/A
1991	Fa		370mm x 100mm	1411 - S603	R409864	R409843	R409844	N/A	N/A
	Ra		370mm x 135mm	1412 - S604	R467407	R409843	R409844	N/A	N/A
1990	Fa		370mm x 100mm	1411 - S603	R409864	R409843	R409844	N/A	N/A
	Ra		370mm x 135mm	1412 - S604	R467407	R409843	R409844	N/A	N/A
1989	Fa		370mm x 100mm	1411 - S603	R409864	R409843	R409844	N/A	N/A
	Ra		370mm x 135mm	1412 - S604	R467407	R409843	R409844	N/A	N/A
1988	Fa		370mm x 100mm	1411 - S603	R409864	R409843	R409844	N/A	N/A
	Ra		370mm x 135mm	1412 - S604	R467407	R409843	R409844	N/A	N/A
1987	Fa		370mm x 100mm	1411 - S603	R409864	R409843	R409844	N/A	N/A
	Ra		370mm x 135mm	1412 - S604	R467407	R409843	R409844	N/A	N/A
CMA-83									
1994	Fa		320mm x 110mm	1410 - S602	R467406	R409841	R409842	N/A	N/A
	Ra		320mm x 130mm	1434 - S632	R469824	R409845	R409846	N/A	N/A
	Ra		320mm x 135mm	1464 - S679	R469828	N/A	N/A	N/A	N/A
1993	Fa		320mm x 110mm	1410 - S602	R467406	R409841	R409842	N/A	N/A
	Ra		320mm x 130mm	1434 - S632	R469824	R409845	R409846	N/A	N/A
	Ra		320mm x 135mm	1464 - S679	R469828	N/A	N/A	N/A	N/A
1992	Fa		320mm x 110mm	1410 - S602	R467406	R409841	R409842	N/A	N/A
	Ra		320mm x 130mm	1434 - S632	R469824	R409845	R409846	N/A	N/A
	Ra		320mm x 135mm	1464 - S679	R469828	N/A	N/A	N/A	N/A
1991	Fa		320mm x 110mm	1410 - S602	R467406	R409841	R409842	N/A	N/A
	Ra		320mm x 130mm	1434 - S632	R469824	R409845	R409846	N/A	N/A
	Ra		320mm x 135mm	1464 - S679	R469828	N/A	N/A	N/A	N/A
1990	Fa		320mm x 110mm	1410 - S602	R467406	R409841	R409842	N/A	N/A
	Ra		320mm x 130mm	1434 - S632	R469824	R409845	R409846	N/A	N/A
	Ra		320mm x 135mm	1464 - S679	R469828	N/A	N/A	N/A	N/A
1989	Fa		320mm x 110mm	1410 - S602	R467406	R409841	R409842	N/A	N/A
	Ra		320mm x 130mm	1434 - S632	R469824	R409845	R409846	N/A	N/A

MERITOR DRUM OR ROTOR NO.	CALIPER OR CYLINDER BORE SIZE	MERITOR CALIPER OR WHEEL CYLINDER (LEFT)	MERITOR CALIPER OR WHEEL CYLINDER (RIGHT)	MERITOR CALIPER OR WHEEL CYLINDER REPAIR KIT	MERITOR CALIPER PISTON	MERITOR MASTER CYLINDER	MERITOR MASTER CYLINDER KIT	MERITOR BRAKE HOSE (LEFT)	MERITOR BRAKE HOSE (RIGHT)
									NISSAN UD(Cont.)
									CLA-83(Cont.)
N/A	N/A	N/A	N/A	N/A	NR	-	-	-	-
N/A	N/A	N/A	N/A	N/A	NR	-	-	-	-
N/A	N/A	N/A	N/A	N/A	NR	-	-	-	-
N/A	N/A	N/A	N/A	N/A	NR	-	-	-	-
N/A	N/A	N/A	N/A	N/A	NR	-	-	-	-
N/A	N/A	N/A	N/A	N/A	NR	-	-	-	-
N/A	N/A	N/A	N/A	N/A	NR	-	-	-	-
N/A	N/A	N/A	N/A	N/A	NR	-	-	-	-
									CLE-87
N/A	N/A	N/A	N/A	N/A	NR	-	-	-	-
N/A	N/A	N/A	N/A	N/A	NR	-	-	-	-
N/A	N/A	N/A	N/A	N/A	NR	-	-	-	-
N/A	N/A	N/A	N/A	N/A	NR	-	-	-	-
N/A	N/A	N/A	N/A	N/A	NR	-	-	-	-
N/A	N/A	N/A	N/A	N/A	NR	-	-	-	-
N/A	N/A	N/A	N/A	N/A	NR	-	-	-	-
N/A	N/A	N/A	N/A	N/A	NR	-	-	-	-
N/A	N/A	N/A	N/A	N/A	NR	-	-	-	-
N/A	N/A	N/A	N/A	N/A	NR	-	-	-	-
N/A	N/A	N/A	N/A	N/A	NR	-	-	-	-
N/A	N/A	N/A	N/A	N/A	NR	-	-	-	-
N/A	N/A	N/A	N/A	N/A	NR	-	-	-	-
N/A	N/A	N/A	N/A	N/A	NR	-	-	-	-
									CMA-83
N/A	N/A	N/A	N/A	N/A	NR	-	-	-	-
N/A	N/A	N/A	N/A	N/A	NR	-	-	-	-
N/A	N/A	N/A	N/A	N/A	NR	-	-	-	-
N/A	N/A	N/A	N/A	N/A	NR	-	-	-	-
N/A	N/A	N/A	N/A	N/A	NR	-	-	-	-
N/A	N/A	N/A	N/A	N/A	NR	-	-	-	-
N/A	N/A	N/A	N/A	N/A	NR	-	-	-	-
N/A	N/A	N/A	N/A	N/A	NR	-	-	-	-
N/A	N/A	N/A	N/A	N/A	NR	-	-	-	-
N/A	N/A	N/A	N/A	N/A	NR	-	-	-	-
N/A	N/A	N/A	N/A	N/A	NR	-	-	-	-
N/A	N/A	N/A	N/A	N/A	NR	-	-	-	-
N/A	N/A	N/A	N/A	N/A	NR	-	-	-	-
N/A	N/A	N/A	N/A	N/A	NR	-	-	-	-
N/A	N/A	N/A	N/A	N/A	NR	-	-	-	-

MAKE MODEL YEAR AXLE CODE AXLE WEIGHT	AXLE & BRK. TYPE	BRK. MFG.	BRAKE SIZE	FMSI	MERITOR DISC PAD OR BRAKE SHOE	MERITOR GUIDE PIN OR RETURN SPRING KIT	MERITOR CALIPER HWD. KIT OR RETURN SPRING KIT	MERITOR ADJUSTER KIT (LEFT WHEEL)	MERITOR ADJUSTER KIT (RIGHT WHEEL)
NISSAN UD(Cont.)									
CMA-83(Cont.)									
1989									
	Ra		320mm x 135mm	1464 - S679	R469828	N/A	N/A	N/A	N/A
1987									
	Fa		320mm x 110mm	1410 - S602	R467406	R409841	R409842	N/A	N/A
	Ra		320mm x 130mm	1434 - S632	R469824	R409845	R409846	N/A	N/A
	Ra		320mm x 135mm	1464 - S679	R469828	N/A	N/A	N/A	N/A
1986									
	Fa		320mm x 110mm	1410 - S602	R467406	R409841	R409842	N/A	N/A
	Ra		320mm x 130mm	1434 - S632	R469824	R409845	R409846	N/A	N/A
	Ra		320mm x 135mm	1464 - S679	R469828	N/A	N/A	N/A	N/A
CMA-87/88									
1994									
	Fa		320mm x 110mm	1410 - S602	R467406	R409841	R409842	N/A	N/A
	Ra		320mm x 130mm	1434 - S632	R469824	R409845	R409846	N/A	N/A
	Ra		320mm x 135mm	1464 - S679	R469828	N/A	N/A	N/A	N/A
1993									
	Fa		320mm x 110mm	1410 - S602	R467406	R409841	R409842	N/A	N/A
	Ra		320mm x 130mm	1434 - S632	R469824	R409845	R409846	N/A	N/A
	Ra		320mm x 135mm	1464 - S679	R469828	N/A	N/A	N/A	N/A
1992									
	Fa		320mm x 110mm	1410 - S602	R467406	R409841	R409842	N/A	N/A
	Ra		320mm x 130mm	1434 - S632	R469824	R409845	R409846	N/A	N/A
	Ra		320mm x 135mm	1464 - S679	R469828	N/A	N/A	N/A	N/A
1991									
	Fa		320mm x 110mm	1410 - S602	R467406	R409841	R409842	N/A	N/A
	Ra		320mm x 130mm	1434 - S632	R469824	R409845	R409846	N/A	N/A
	Ra		320mm x 135mm	1464 - S679	R469828	N/A	N/A	N/A	N/A
1990									
	Fa		320mm x 110mm	1410 - S602	R467406	R409841	R409842	N/A	N/A
	Ra		320mm x 130mm	1434 - S632	R469824	R409845	R409846	N/A	N/A
	Ra		320mm x 135mm	1464 - S679	R469828	N/A	N/A	N/A	N/A
1989									
	Fa		320mm x 110mm	1410 - S602	R467406	R409841	R409842	N/A	N/A
	Ra		320mm x 130mm	1434 - S632	R469824	R409845	R409846	N/A	N/A
	Ra		320mm x 135mm	1464 - S679	R469828	N/A	N/A	N/A	N/A
1987									
	Fa		320mm x 110mm	1410 - S602	R467406	R409841	R409842	N/A	N/A
	Ra		320mm x 130mm	1434 - S632	R469824	R409845	R409846	N/A	N/A
	Ra		320mm x 135mm	1464 - S679	R469828	N/A	N/A	N/A	N/A
1986									
	Fa		320mm x 110mm	1410 - S602	R467406	R409841	R409842	N/A	N/A
	Ra		320mm x 130mm	1434 - S632	R469824	R409845	R409846	N/A	N/A
	Ra		320mm x 135mm	1464 - S679	R469828	N/A	N/A	N/A	N/A
CPB-12 SERIES									
1994									
	Fa		400mm x 120mm	1422 - S617	R467410	R409843	R409844	N/A	N/A
	Ra		410mm x 154mm	1419 - S614	R467408	R409853	R409844	N/A	N/A
1993									
	Fa		400mm x 120mm	1422 - S617	R467410	R409843	R409844	N/A	N/A
	Ra		410mm x 154mm	1419 - S614	R467408	R409853	R409844	N/A	N/A
1992									
	Fa		400mm x 120mm	1422 - S617	R467410	R409843	R409844	N/A	N/A
	Ra		410mm x 154mm	1419 - S614	R467408	R409853	R409844	N/A	N/A
1991									
	Fa		400mm x 120mm	1422 - S617	R467410	R409843	R409844	N/A	N/A
	Ra		410mm x 154mm	1419 - S614	R467408	R409853	R409844	N/A	N/A
1990									
	Fa		400mm x 120mm	1422 - S617	R467410	R409843	R409844	N/A	N/A
	Ra		410mm x 154mm	1419 - S614	R467408	R409853	R409844	N/A	N/A
1989									
	Fa		400mm x 120mm	1422 - S617	R467410	R409843	R409844	N/A	N/A
	Ra		410mm x 154mm	1419 - S614	R467408	R409853	R409844	N/A	N/A
1988									
	Fa		400mm x 120mm	1422 - S617	R467410	R409843	R409844	N/A	N/A

MERITOR DRUM OR ROTOR NO.	CALIPER OR CYLINDER BORE SIZE	MERITOR CALIPER OR WHEEL CYLINDER (LEFT)	MERITOR CALIPER OR WHEEL CYLINDER (RIGHT)	MERITOR CALIPER OR WHEEL CYLINDER REPAIR KIT	MERITOR CALIPER PISTON	MERITOR MASTER CYLINDER	MERITOR MASTER CYLINDER KIT	MERITOR BRAKE HOSE (LEFT)	MERITOR BRAKE HOSE (RIGHT)
NISSAN UD(Cont.)									
CMA-83(Cont.)									
N/A	N/A	N/A	N/A	N/A	NR	-	-	-	-
N/A	N/A	N/A	N/A	N/A	NR	-	-	-	-
N/A	N/A	N/A	N/A	N/A	NR	-	-	-	-
N/A	N/A	N/A	N/A	N/A	NR	-	-	-	-
N/A	N/A	N/A	N/A	N/A	NR	-	-	-	-
N/A	N/A	N/A	N/A	N/A	NR	-	-	-	-
N/A	N/A	N/A	N/A	N/A	NR	-	-	-	-
CMA-87/88									
N/A	N/A	N/A	N/A	N/A	NR	-	-	-	-
N/A	N/A	N/A	N/A	N/A	NR	-	-	-	-
N/A	N/A	N/A	N/A	N/A	NR	-	-	-	-
N/A	N/A	N/A	N/A	N/A	NR	-	-	-	-
N/A	N/A	N/A	N/A	N/A	NR	-	-	-	-
N/A	N/A	N/A	N/A	N/A	NR	-	-	-	-
N/A	N/A	N/A	N/A	N/A	NR	-	-	-	-
N/A	N/A	N/A	N/A	N/A	NR	-	-	-	-
N/A	N/A	N/A	N/A	N/A	NR	-	-	-	-
N/A	N/A	N/A	N/A	N/A	NR	-	-	-	-
N/A	N/A	N/A	N/A	N/A	NR	-	-	-	-
N/A	N/A	N/A	N/A	N/A	NR	-	-	-	-
N/A	N/A	N/A	N/A	N/A	NR	-	-	-	-
N/A	N/A	N/A	N/A	N/A	NR	-	-	-	-
N/A	N/A	N/A	N/A	N/A	NR	-	-	-	-
N/A	N/A	N/A	N/A	N/A	NR	-	-	-	-
CPB-12 SERIES									
N/A	N/A	N/A	N/A	N/A	NR	-	-	-	-
N/A	N/A	N/A	N/A	N/A	NR	-	-	-	-
N/A	N/A	N/A	N/A	N/A	NR	-	-	-	-
N/A	N/A	N/A	N/A	N/A	NR	-	-	-	-
N/A	N/A	N/A	N/A	N/A	NR	-	-	-	-
N/A	N/A	N/A	N/A	N/A	NR	-	-	-	-
N/A	N/A	N/A	N/A	N/A	NR	-	-	-	-
N/A	N/A	N/A	N/A	N/A	NR	-	-	-	-
N/A	N/A	N/A	N/A	N/A	NR	-	-	-	-
N/A	N/A	N/A	N/A	N/A	NR	-	-	-	-
N/A	N/A	N/A	N/A	N/A	NR	-	-	-	-

MAKE MODEL YEAR AXLE CODE AXLE WEIGHT	AXLE & BRK. TYPE	BRK. MFG.	BRAKE SIZE	FMSI	MERITOR DISC PAD OR BRAKE SHOE	MERITOR GUIDE PIN OR RETURN SPRING KIT	MERITOR CALIPER HWD. KIT OR RETURN SPRING KIT	MERITOR ADJUSTER KIT (LEFT WHEEL)	MERITOR ADJUSTER KIT (RIGHT WHEEL)
NISSAN UD(Cont.)									
CPB-12 SERIES(Cont.)									
1988									
	Ra		410mm x 154mm	1419 - S614	R467408	R409853	R409844	N/A	N/A
1987									
	Fa		400mm x 120mm	1422 - S617	R467410	R409843	R409844	N/A	N/A
	Ra		410mm x 154mm	1419 - S614	R467408	R409853	R409844	N/A	N/A
1986									
	Fa		400mm x 120mm	1422 - S617	R467410	R409843	R409844	N/A	N/A
	Ra		410mm x 154mm	1419 - S614	R467408	R409853	R409844	N/A	N/A
1985									
	Fa		400mm x 120mm	1422 - S617	R467410	R409843	R409844	N/A	N/A
	Ra		410mm x 154mm	1419 - S614	R467408	R409853	R409844	N/A	N/A
1984									
	Fa		400mm x 120mm	1422 - S617	R467410	R409843	R409844	N/A	N/A
	Ra		410mm x 154mm	1419 - S614	R467408	R409853	R409844	N/A	N/A
STERLING									
ACTERRA									
2006									
	Fd	Bosch		7655 - D786	MD786	R4011754	NR	NR	NR
	Fd	Bosch		7654 - D786	MD786A	R4011754	NR	NR	NR
	Rd	Bosch		7655 - D786	MD786	R4011754	NR	NR	NR
	Rd	Bosch		7654 - D786	MD786A	R4011754	NR	NR	NR
2005									
	Fd	Bosch		7655 - D786	MD786	R4011754	NR	NR	NR
	Fd	Bosch		7654 - D786	MD786A	R4011754	NR	NR	NR
	Rd	Bosch		7655 - D786	MD786	R4011754	NR	NR	NR
	Rd	Bosch		7654 - D786	MD786A	R4011754	NR	NR	NR
2004									
	Fd	Bosch		7655 - D786	MD786	R4011754	NR	NR	NR
	Fd	Bosch		7654 - D786	MD786A	R4011754	NR	NR	NR
	Rd	Bosch		7655 - D786	MD786	R4011754	NR	NR	NR
	Rd	Bosch		7654 - D786	MD786A	R4011754	NR	NR	NR
2003									
	Fd	Bosch		7655 - D786	MD786	R4011754	NR	NR	NR
	Fd	Bosch		7654 - D786	MD786A	R4011754	NR	NR	NR
	Fd	Meritor		7636 - D769	MD769	NR	R4011729	NR	NR
	Fd	Meritor		7636 - D769	MD769	NR	R4011729	NR	NR
	Fd	Meritor		7636 - D769	MD769	NR	R4011729	NR	NR
	Fd	Meritor		7636 - D769	MD769	NR	R4011729	NR	NR
	Rd	Bosch		7655 - D786	MD786	R4011754	NR	NR	NR
	Rd	Bosch		7654 - D786	MD786A	R4011754	NR	NR	NR
2002									
	Fd	Bosch		7655 - D786	MD786	R4011754	NR	NR	NR
	Fd	Bosch		7654 - D786	MD786A	R4011754	NR	NR	NR
	Fd	Meritor		7636 - D769	MD769	NR	R4011729	NR	NR
	Fd	Meritor		7636 - D769	MD769	NR	R4011729	NR	NR
	Fd	Meritor		7636 - D769	MD769	NR	R4011729	NR	NR
	Fd	Meritor		7636 - D769	MD769	NR	R4011729	NR	NR
	Rd	Bosch		7655 - D786	MD786	R4011754	NR	NR	NR
	Rd	Bosch		7654 - D786	MD786A	R4011754	NR	NR	NR
2001									
	Fd	Bosch		7655 - D786	MD786	R4011754	NR	NR	NR
	Fd	Bosch		7654 - D786	MD786A	R4011754	NR	NR	NR
	Fd	Meritor		7636 - D769	MD769	NR	R4011729	NR	NR
	Fd	Meritor		7636 - D769	MD769	NR	R4011729	NR	NR
	Fd	Meritor		7636 - D769	MD769	NR	R4011729	NR	NR
	Fd	Meritor		7636 - D769	MD769	NR	R4011729	NR	NR
	Rd	Bosch		7655 - D786	MD786	R4011754	NR	NR	NR
	Rd	Bosch		7654 - D786	MD786A	R4011754	NR	NR	NR
2000									
	Fd	Bosch		7655 - D786	MD786	R4011754	NR	NR	NR
	Fd	Bosch		7654 - D786	MD786A	R4011754	NR	NR	NR
	Fd	Meritor		7636 - D769	MD769	NR	R4011729	NR	NR
	Fd	Meritor		7636 - D769	MD769	NR	R4011729	NR	NR

356 - Single Hydraulic System, Bosch Cylinder, after Serial No. Q20000, 18,500lb. Rear Axle

365 - Caliper Loaded with Hardware and Disc Pads

MERITOR DRUM OR ROTOR NO.	CALIPER OR CYLINDER BORE SIZE	MERITOR CALIPER OR WHEEL CYLINDER (LEFT)	MERITOR CALIPER OR WHEEL CYLINDER (RIGHT)	MERITOR CALIPER OR WHEEL CYLINDER REPAIR KIT	MERITOR CALIPER PISTON	MERITOR MASTER CYLINDER	MERITOR MASTER CYLINDER KIT	MERITOR BRAKE HOSE (LEFT)	MERITOR BRAKE HOSE (RIGHT)
NISSAN UD(Cont.)									
CPB-12 SERIES(Cont.)									
N/A	N/A	N/A	N/A	N/A	NR	-	-	-	-
N/A	N/A	N/A	N/A	N/A	NR	-	-	-	-
N/A	N/A	N/A	N/A	N/A	NR	-	-	-	-
N/A	N/A	N/A	N/A	N/A	NR	-	-	-	-
N/A	N/A	N/A	N/A	N/A	NR	-	-	-	-
N/A	N/A	N/A	N/A	N/A	NR	-	-	-	-
N/A	N/A	N/A	N/A	N/A	NR	-	-	-	-
N/A	N/A	N/A	N/A	N/A	NR	-	-	-	-
STERLING									
ACTERRA									
23-123557-004	73mm	R424153216	R424153216[365]	R4011758	R4011757	-	-	-	-
23-123557-004	66mm	R424153263	R424153263[356]	R4011752	R4011751	-	-	-	-
23-123557-004	73mm	R424153216	R424153216[365]	R4011758	R4011757	-	-	-	-
23-123557-004	66mm	R424153263	R424153263[356]	R4011752	R4011751	-	-	-	-
23-123557-004	73mm	R424153216	R424153216[365]	R4011758	R4011757	-	-	-	-
23-123557-004	66mm	R424153263	R424153263[356]	R4011752	R4011751	-	-	-	-
23-123557-004	73mm	R424153216	R424153216[365]	R4011758	R4011757	-	-	-	-
23-123557-004	66mm	R424153263	R424153263[356]	R4011752	R4011751	-	-	-	-
23-123557-004	73mm	R424153216	R424153216[365]	R4011758	R4011757	-	-	-	-
23-123557-004	66mm	R424153263	R424153263[356]	R4011752	R4011751	-	-	-	-
23-123557-004	73mm	R424153216	R424153216[365]	R4011758	R4011757	-	-	-	-
23-123557-004	66mm	R424153263	R424153263[356]	R4011752	R4011751	-	-	-	-
23-123557-004	64mm	60450474001	60450473001[356]	R4011731	R4011511	-	-	-	-
23-123557-004	70mm	60450469002	60450468002[356]	R4011730	60050334	-	-	-	-
23-123557-004	64mm	60450474001	60450473001[356]	R4011731	R4011511	-	-	-	-
23-123557-004	70mm	60450469002	60450468002[356]	R4011730	60050334	-	-	-	-
23-123557-004	73mm	R424153216	R424153216[365]	R4011758	R4011757	-	-	-	-
23-123557-004	66mm	R424153263	R424153263[356]	R4011752	R4011751	-	-	-	-
23-123557-004	73mm	R424153216	R424153216[365]	R4011758	R4011757	-	-	-	-
23-123557-004	66mm	R424153263	R424153263[356]	R4011752	R4011751	-	-	-	-
23-123557-004	64mm	60450474001	60450473001[356]	R4011731	R4011511	-	-	-	-
23-123557-004	70mm	60450469002	60450468002[356]	R4011730	60050334	-	-	-	-
23-123557-004	64mm	60450474001	60450473001[356]	R4011731	R4011511	-	-	-	-
23-123557-004	70mm	60450469002	60450468002[356]	R4011730	60050334	-	-	-	-
23-123557-004	73mm	R424153216	R424153216[365]	R4011758	R4011757	-	-	-	-
23-123557-004	66mm	R424153263	R424153263[356]	R4011752	R4011751	-	-	-	-
23-123557-004	73mm	R424153216	R424153216[365]	R4011758	R4011757	-	-	-	-
23-123557-004	66mm	R424153263	R424153263[356]	R4011752	R4011751	-	-	-	-
23-123557-004	64mm	60450474001	60450473001[356]	R4011731	R4011511	-	-	-	-
23-123557-004	70mm	60450469002	60450468002[356]	R4011730	60050334	-	-	-	-
23-123557-004	64mm	60450474001	60450473001[356]	R4011731	R4011511	-	-	-	-
23-123557-004	70mm	60450469002	60450468002[356]	R4011730	60050334	-	-	-	-
23-123557-004	73mm	R424153216	R424153216[365]	R4011758	R4011757	-	-	-	-
23-123557-004	66mm	R424153263	R424153263[356]	R4011752	R4011751	-	-	-	-
23-123557-004	73mm	R424153216	R424153216[365]	R4011758	R4011757	-	-	-	-
23-123557-004	66mm	R424153263	R424153263[356]	R4011752	R4011751	-	-	-	-
23-123557-004	64mm	60450474001	60450473001[356]	R4011731	R4011511	-	-	-	-
23-123557-004	70mm	60450469002	60450468002[356]	R4011730	60050334	-	-	-	-

MAKE MODEL YEAR AXLE CODE AXLE WEIGHT	AXLE & BRK. TYPE	BRK. MFG.	BRAKE SIZE	FMSI	MERITOR DISC PAD OR BRAKE SHOE	MERITOR GUIDE PIN OR RETURN SPRING KIT	MERITOR CALIPER HWD. KIT OR RETURN SPRING KIT	MERITOR ADJUSTER KIT (LEFT WHEEL)	MERITOR ADJUSTER KIT (RIGHT WHEEL)
STERLING(Cont.)									
ACTERRA(Cont.)									
2000									
	Rd	Bosch		7655 - D786	MD786	R4011754	NR	NR	NR
	Rd	Bosch		7654 - D786	MD786A	R4011754	NR	NR	NR
	Rd	Meritor		7636 - D769	MD769	NR	R4011729	NR	NR
	Rd	Meritor		7636 - D769	MD769	NR	R4011729	NR	NR
THOMAS BUILT									
2007									
	Rd	Bosch		7654 - D786	MD786A	R4011754	NR	NR	NR
	Rd	Bosch		7654 - D786	MD786A	R4011754	NR	NR	NR
	Rd	Meritor		7636 - D769	MD769	NR	R4011729	NR	NR
Westport 10,000 & 12,000 lb.	Fd	Meritor		7636 - D769	MD769	NR	R4011729	NR	NR
6,000 lb to 9,900 lb	Fd	Bosch		7654 - D786	MD786A	R4011754	NR	NR	NR
	Fd	Bosch		7654 - D786	MD786A	R4011754	NR	NR	NR
	Fd	Meritor		7636 - D769	MD769	NR	R4011729	NR	NR
10,000 & 12,000 lb.	Fd	Bosch		7655 - D786	MD786	R4011754	NR	NR	NR
	Fd	Bosch		7655 - D786	MD786	R4011754	NR	NR	NR
19,000 to 23,000 lb	Rd	Bosch		7655 - D786	MD786	R4011754	NR	NR	NR
	Rd	Bosch		7655 - D786	MD786	R4011754	NR	NR	NR
2006									
	Rd	Bosch		7654 - D786	MD786A	R4011754	NR	NR	NR
	Rd	Bosch		7654 - D786	MD786A	R4011754	NR	NR	NR
	Rd	Meritor		7636 - D769	MD769	NR	R4011729	NR	NR
Westport 10,000 & 12,000 lb.	Fd	Meritor		7636 - D769	MD769	NR	R4011729	NR	NR
6,000 lb to 9,900 lb	Fd	Bosch		7654 - D786	MD786A	R4011754	NR	NR	NR
	Fd	Bosch		7654 - D786	MD786A	R4011754	NR	NR	NR
	Fd	Meritor		7636 - D769	MD769	NR	R4011729	NR	NR
10,000 & 12,000 lb.	Fd	Bosch		7655 - D786	MD786	R4011754	NR	NR	NR
	Fd	Bosch		7655 - D786	MD786	R4011754	NR	NR	NR
19,000 to 23,000 lb	Rd	Bosch		7655 - D786	MD786	R4011754	NR	NR	NR
	Rd	Bosch		7655 - D786	MD786	R4011754	NR	NR	NR
2005									
	Rd	Bosch		7654 - D786	MD786A	R4011754	NR	NR	NR
6,000 lb to 9,900 lb	Fd	Bosch		7654 - D786	MD786A	R4011754	NR	NR	NR
10,000 & 12,000 lb.	Fd	Bosch		7655 - D786	MD786	R4011754	NR	NR	NR
19,000 to 23,000 lb	Rd	Bosch		7655 - D786	MD786	R4011754	NR	NR	NR
2004									
	Rd	Bosch		7654 - D786	MD786A	R4011754	NR	NR	NR
6,000 lb to 9,900 lb	Fd	Bosch		7654 - D786	MD786A	R4011754	NR	NR	NR
10,000 & 12,000 lb.	Fd	Bosch		7655 - D786	MD786	R4011754	NR	NR	NR
19,000 to 23,000 lb	Rd	Bosch		7655 - D786	MD786	R4011754	NR	NR	NR
2003									
	Rd	Meritor		7636 - D769	MD769	NR	R4011729	NR	NR
Westport 10,000 & 12,000 lb.	Fd	Meritor		7636 - D769	MD769	NR	R4011729	NR	NR
6,000 lb to 9,900 lb	Fd	Meritor		7636 - D769	MD769	NR	R4011729	NR	NR
19,000 to 23,000 lb	Rd	Meritor		7636 - D769	MD769	NR	R4011729	NR	NR
2002									
	Rd	Meritor		7636 - D769	MD769	NR	R4011729	NR	NR
Westport 10,000 & 12,000 lb.	Fd	Meritor		7636 - D769	MD769	NR	R4011729	NR	NR
6,000 lb to 9,900 lb	Fd	Meritor		7636 - D769	MD769	NR	R4011729	NR	NR
19,000 to 23,000 lb	Rd	Meritor		7636 - D769	MD769	NR	R4011729	NR	NR
VOLVO									
F6									
1987									
	Fa		15-1/2 " x 5 "	1356	R46700021	R407048	R407049[349]	NR	NR
	Fa		15-1/2 " x 5 "	1356	R46700021	R407048	R407049[349]	NR	NR
	Fa		15-1/2 " x 5 "	1356	R46700021	R407048	R407049[349]	NR	NR
	Fa		15-1/2 " x 5 "	1356	R46700021	R407048	R407049[349]	NR	NR
	Fa		15-1/2 " x 5 "	1356	R46700021	R407048	R407049[349]	NR	NR

349 - Contains Adjuster

356 - Single Hydraulic System, Bosch Cylinder, after Serial No. Q20000, 18,500lb. Rear Axle

365 - Caliper Loaded with Hardware and Disc Pads

MERITOR DRUM OR ROTOR NO.	CALIPER OR CYLINDER BORE SIZE	MERITOR CALIPER OR WHEEL CYLINDER (LEFT)	MERITOR CALIPER OR WHEEL CYLINDER (RIGHT)	MERITOR CALIPER OR WHEEL CYLINDER REPAIR KIT	MERITOR CALIPER PISTON	MERITOR MASTER CYLINDER	MERITOR MASTER CYLINDER KIT	MERITOR BRAKE HOSE (LEFT)	MERITOR BRAKE HOSE (RIGHT)
STERLING(Cont.)									
ACTERRA(Cont.)									
23-123557-004	73mm	R424153216	R424153216[365]	R4011758	R4011757	-	-	-	-
23-123557-004	66mm	R424153263	R424153263[356]	R4011752	R4011751	-	-	-	-
23-123557-004	64mm	60450474001	60450473001[356]	R4011731	R4011511	-	-	-	-
23-123557-004	70mm	60450469002	60450468002[356]	R4011730	60050334	-	-	-	-
THOMAS BUILT									
23-123557-004	66mm	R424153263	R424153263[356]	R4011752	R4011751	-	-	-	-
23-123557-004	66mm	R424153263	R424153263[356]	R4011752	R4011751	-	-	-	-
23-123557-004	64mm	60450474001	60450473001	R4011731	R4011511	-	-	-	-
23-123557-004	70mm	60450469002	60450468002	R4011730	60050334	-	-	-	-
23-123557-004	66mm	R424153263	R424153263[356]	R4011752	R4011751	-	-	-	-
23-123557-004	66mm	R424153263	R424153263[356]	R4011752	R4011751	-	-	-	-
23-123557-004	64mm	60450474001	60450473001	R4011731	R4011511	-	-	-	-
23-123557-004	73mm	R424153216	R424153216[365]	R4011758	R4011757	-	-	-	-
23-123557-004	73mm	R424153216	R424153216[365]	R4011758	R4011757	-	-	-	-
23-123557-004	73mm	R424153216	R424153216[365]	R4011758	R4011757	-	-	-	-
23-123557-004	73mm	R424153216	R424153216[365]	R4011758	R4011757	-	-	-	-
23-123557-004	66mm	R424153263	R424153263[356]	R4011752	R4011751	-	-	-	-
23-123557-004	66mm	R424153263	R424153263[356]	R4011752	R4011751	-	-	-	-
23-123557-004	64mm	60450474001	60450473001	R4011731	R4011511	-	-	-	-
23-123557-004	70mm	60450469002	60450468002	R4011730	60050334	-	-	-	-
23-123557-004	66mm	R424153263	R424153263[356]	R4011752	R4011751	-	-	-	-
23-123557-004	66mm	R424153263	R424153263[356]	R4011752	R4011751	-	-	-	-
23-123557-004	64mm	60450474001	60450473001	R4011731	R4011511	-	-	-	-
23-123557-004	73mm	R424153216	R424153216[365]	R4011758	R4011757	-	-	-	-
23-123557-004	73mm	R424153216	R424153216[365]	R4011758	R4011757	-	-	-	-
23-123557-004	73mm	R424153216	R424153216[365]	R4011758	R4011757	-	-	-	-
23-123557-004	73mm	R424153216	R424153216[365]	R4011758	R4011757	-	-	-	-
23-123557-004	66mm	R424153263	R424153263[356]	R4011752	R4011751	-	-	-	-
23-123557-004	66mm	R424153263	R424153263[356]	R4011752	R4011751	-	-	-	-
23-123557-004	73mm	R424153216	R424153216[365]	R4011758	R4011757	-	-	-	-
23-123557-004	73mm	R424153216	R424153216[365]	R4011758	R4011757	-	-	-	-
23-123557-004	66mm	R424153263	R424153263[356]	R4011752	R4011751	-	-	-	-
23-123557-004	66mm	R424153263	R424153263[356]	R4011752	R4011751	-	-	-	-
23-123557-004	73mm	R424153216	R424153216[365]	R4011758	R4011757	-	-	-	-
23-123557-004	73mm	R424153216	R424153216[365]	R4011758	R4011757	-	-	-	-
23-123557-004	64mm	60450474001	60450473001	R4011731	R4011511	-	-	-	-
23-123557-004	70mm	60450469002	60450468002	R4011730	60050334	-	-	-	-
23-123557-004	64mm	60450474001	60450473001	R4011731	R4011511	-	-	-	-
23-123557-004	70mm	60450469002	60450468002	R4011730	60050334	-	-	-	-
23-123557-004	64mm	60450474001	60450473001	R4011731	R4011511	-	-	-	-
23-123557-004	70mm	60450469002	60450468002	R4011730	60050334	-	-	-	-
VOLVO									
F6									
R447194	1-3/4 "	R417054	R417056	R417068	NR	-	-	-	-
R447194	1-1/2 "	R 417050	R 417052	R417067	NR	-	-	-	-
R447194	1-1/2 "	R417055	R417057	R417068	NR	-	-	-	-
R447194	1-3/4 "	R417054	R417056	R417068	NR	-	-	-	-
R447194	1-1/2 "	R 417051	R 417053	R417067	NR	-	-	-	-

MAKE MODEL YEAR AXLE CODE AXLE WEIGHT	AXLE & BRK. TYPE	BRK. MFG.	BRAKE SIZE	FMSI	MERITOR DISC PAD OR BRAKE SHOE	MERITOR GUIDE PIN OR RETURN SPRING KIT	MERITOR CALIPER HWD. KIT OR RETURN SPRING KIT	MERITOR ADJUSTER KIT (LEFT WHEEL)	MERITOR ADJUSTER KIT (RIGHT WHEEL)
VOLVO(Cont.)									
F6(Cont.)									
1987									
	Fa		15-1/2 " x 5 "	1356	R46700021	R407048	R407049[349]	NR	NR
	Fa		15-1/2 " x 5 "	1356	R46700021	R407048	R407049[349]	NR	NR
	Fa		15-1/2 " x 5 "	1356	R46700021	R407048	R407049[349]	NR	NR
	Ra		15-1/2 " x 6 "	1357	-	R407048	R407049[349]	NR	NR
	Ra		15-1/2 " x 6 "	1357	-	R407048	R407049[349]	NR	NR
1986									
	Fa		15-1/2 " x 5 "	1356	R46700021	R407048	R407049[349]	NR	NR
	Fa		15-1/2 " x 5 "	1356	R46700021	R407048	R407049[349]	NR	NR
	Fa		15-1/2 " x 5 "	1356	R46700021	R407048	R407049[349]	NR	NR
	Fa		15-1/2 " x 5 "	1356	R46700021	R407048	R407049[349]	NR	NR
	Fa		15-1/2 " x 5 "	1356	R46700021	R407048	R407049[349]	NR	NR
	Fa		15-1/2 " x 5 "	1356	R46700021	R407048	R407049[349]	NR	NR
	Fa		15-1/2 " x 5 "	1356	R46700021	R407048	R407049[349]	NR	NR
	Fa		15-1/2 " x 5 "	1356	R46700021	R407048	R407049[349]	NR	NR
	Ra		15-1/2 " x 6 "	1357	-	R407048	R407049[349]	NR	NR
	Ra		15-1/2 " x 6 "	1357	-	R407048	R407049[349]	NR	NR
1985									
	Fa		15-1/2 " x 5 "	1356	R46700021	R407048	R407049[349]	NR	NR
	Fa		15-1/2 " x 5 "	1356	R46700021	R407048	R407049[349]	NR	NR
	Fa		15-1/2 " x 5 "	1356	R46700021	R407048	R407049[349]	NR	NR
	Fa		15-1/2 " x 5 "	1356	R46700021	R407048	R407049[349]	NR	NR
	Fa		15-1/2 " x 5 "	1356	R46700021	R407048	R407049[349]	NR	NR
	Fa		15-1/2 " x 5 "	1356	R46700021	R407048	R407049[349]	NR	NR
	Fa		15-1/2 " x 5 "	1356	R46700021	R407048	R407049[349]	NR	NR
	Fa		15-1/2 " x 5 "	1356	R46700021	R407048	R407049[349]	NR	NR
	Ra		15-1/2 " x 6 "	1357	-	R407048	R407049[349]	NR	NR
	Ra		15-1/2 " x 6 "	1357	-	R407048	R407049[349]	NR	NR
1984									
	Fa		15-1/2 " x 5 "	1356	R46700021	R407048	R407049[349]	NR	NR
	Fa		15-1/2 " x 5 "	1356	R46700021	R407048	R407049[349]	NR	NR
	Fa		15-1/2 " x 5 "	1356	R46700021	R407048	R407049[349]	NR	NR
	Fa		15-1/2 " x 5 "	1356	R46700021	R407048	R407049[349]	NR	NR
	Fa		15-1/2 " x 5 "	1356	R46700021	R407048	R407049[349]	NR	NR
	Fa		15-1/2 " x 5 "	1356	R46700021	R407048	R407049[349]	NR	NR
	Fa		15-1/2 " x 5 "	1356	R46700021	R407048	R407049[349]	NR	NR
	Fa		15-1/2 " x 5 "	1356	R46700021	R407048	R407049[349]	NR	NR
	Ra		15-1/2 " x 6 "	1357	-	R407048	R407049[349]	NR	NR
	Ra		15-1/2 " x 6 "	1357	-	R407048	R407049[349]	NR	NR
1983									
	Fa		15-1/2 " x 5 "	1356	R46700021	R407048	R407049[349]	NR	NR
	Fa		15-1/2 " x 5 "	1356	R46700021	R407048	R407049[349]	NR	NR
	Fa		15-1/2 " x 5 "	1356	R46700021	R407048	R407049[349]	NR	NR
	Fa		15-1/2 " x 5 "	1356	R46700021	R407048	R407049[349]	NR	NR
	Fa		15-1/2 " x 5 "	1356	R46700021	R407048	R407049[349]	NR	NR
	Fa		15-1/2 " x 5 "	1356	R46700021	R407048	R407049[349]	NR	NR
	Fa		15-1/2 " x 5 "	1356	R46700021	R407048	R407049[349]	NR	NR
	Fa		15-1/2 " x 5 "	1356	R46700021	R407048	R407049[349]	NR	NR
	Ra		15-1/2 " x 6 "	1357	-	R407048	R407049[349]	NR	NR
	Ra		15-1/2 " x 6 "	1357	-	R407048	R407049[349]	NR	NR
1982									
	Fa		15-1/2 " x 5 "	1356	R46700021	R407048	R407049[349]	NR	NR
	Fa		15-1/2 " x 5 "	1356	R46700021	R407048	R407049[349]	NR	NR
	Fa		15-1/2 " x 5 "	1356	R46700021	R407048	R407049[349]	NR	NR
	Fa		15-1/2 " x 5 "	1356	R46700021	R407048	R407049[349]	NR	NR
	Fa		15-1/2 " x 5 "	1356	R46700021	R407048	R407049[349]	NR	NR
	Fa		15-1/2 " x 5 "	1356	R46700021	R407048	R407049[349]	NR	NR
	Fa		15-1/2 " x 5 "	1356	R46700021	R407048	R407049[349]	NR	NR
	Fa		15-1/2 " x 5 "	1356	R46700021	R407048	R407049[349]	NR	NR
	Ra		15-1/2 " x 6 "	1357	-	R407048	R407049[349]	NR	NR
	Ra		15-1/2 " x 6 "	1357	-	R407048	R407049[349]	NR	NR
1981									
	Fa		15-1/2 " x 5 "	1356	R46700021	R407048	R407049[349]	NR	NR
	Fa		15-1/2 " x 5 "	1356	R46700021	R407048	R407049[349]	NR	NR
	Fa		15-1/2 " x 5 "	1356	R46700021	R407048	R407049[349]	NR	NR

349 - Contains Adjuster

MERITOR DRUM OR ROTOR NO.	CALIPER OR CYLINDER BORE SIZE	MERITOR CALIPER OR WHEEL CYLINDER (LEFT)	MERITOR CALIPER OR WHEEL CYLINDER (RIGHT)	MERITOR CALIPER OR WHEEL CYLINDER REPAIR KIT	MERITOR CALIPER PISTON	MERITOR MASTER CYLINDER	MERITOR MASTER CYLINDER KIT	MERITOR BRAKE HOSE (LEFT)	MERITOR BRAKE HOSE (RIGHT)
									VOLVO(Cont.)
									F6(Cont.)
R447194	1-1/2 "	R 417051	R 417053	R417067	NR	-	-	-	-
R447194	1-1/2 "	R 417050	R 417052	R417067	NR	-	-	-	-
R447194	1-1/2 "	R417055	R417057	R417068	NR	-	-	-	-
R447195	1-3/4 "	R417058	R417059	R417069	NR	-	-	-	-
R447195	1-3/4 "	R417054	R417056	R417068	NR	-	-	-	-
R447194	1-1/2 "	R 417050	R 417052	R417067	NR	-	-	-	-
R447194	1-1/2 "	R417055	R417057	R417068	NR	-	-	-	-
R447194	1-3/4 "	R417054	R417056	R417068	NR	-	-	-	-
R447194	1-1/2 "	R 417051	R 417053	R417067	NR	-	-	-	-
R447194	1-1/2 "	R 417050	R 417052	R417067	NR	-	-	-	-
R447194	1-1/2 "	R417055	R417057	R417068	NR	-	-	-	-
R447194	1-1/2 "	R 417051	R 417053	R417067	NR	-	-	-	-
R447194	1-3/4 "	R417054	R417056	R417068	NR	-	-	-	-
R447195	1-3/4 "	R417054	R417056	R417068	NR	-	-	-	-
R447195	1-3/4 "	R417058	R417059	R417069	NR	-	-	-	-
R447194	1-1/2 "	R 417050	R 417052	R417067	NR	-	-	-	-
R447194	1-3/4 "	R417054	R417056	R417068	NR	-	-	-	-
R447194	1-1/2 "	R 417051	R 417053	R417067	NR	-	-	-	-
R447194	1-1/2 "	R 417050	R 417052	R417067	NR	-	-	-	-
R447194	1-1/2 "	R417055	R417057	R417068	NR	-	-	-	-
R447194	1-1/2 "	R 417051	R 417053	R417067	NR	-	-	-	-
R447194	1-1/2 "	R417055	R417057	R417068	NR	-	-	-	-
R447194	1-3/4 "	R417054	R417056	R417068	NR	-	-	-	-
R447195	1-3/4 "	R417058	R417059	R417069	NR	-	-	-	-
R447195	1-3/4 "	R417054	R417056	R417068	NR	-	-	-	-
R447194	1-1/2 "	R 417050	R 417052	R417067	NR	-	-	-	-
R447194	1-3/4 "	R417054	R417056	R417068	NR	-	-	-	-
R447194	1-1/2 "	R417055	R417057	R417068	NR	-	-	-	-
R447194	1-1/2 "	R 417051	R 417053	R417067	NR	-	-	-	-
R447194	1-1/2 "	R 417050	R 417052	R417067	NR	-	-	-	-
R447194	1-1/2 "	R417055	R417057	R417068	NR	-	-	-	-
R447194	1-1/2 "	R 417051	R 417053	R417067	NR	-	-	-	-
R447194	1-3/4 "	R417054	R417056	R417068	NR	-	-	-	-
R447195	1-3/4 "	R417054	R417056	R417068	NR	-	-	-	-
R447195	1-3/4 "	R417058	R417059	R417069	NR	-	-	-	-
R447194	1-1/2 "	R 417051	R 417053	R417067	NR	-	-	-	-
R447194	1-1/2 "	R 417051	R 417053	R417067	NR	-	-	-	-
R447194	1-1/2 "	R 417050	R 417052	R417067	NR	-	-	-	-
R447194	1-1/2 "	R417055	R417057	R417068	NR	-	-	-	-
R447194	1-3/4 "	R417054	R417056	R417068	NR	-	-	-	-
R447194	1-3/4 "	R417054	R417056	R417068	NR	-	-	-	-
R447194	1-1/2 "	R 417050	R 417052	R417067	NR	-	-	-	-
R447195	1-3/4 "	R417058	R417059	R417069	NR	-	-	-	-
R447195	1-3/4 "	R417054	R417056	R417068	NR	-	-	-	-
R447194	1-1/2 "	R417055	R417057	R417068	NR	-	-	-	-
R447194	1-1/2 "	R 417050	R 417052	R417067	NR	-	-	-	-
R447194	1-1/2 "	R 417051	R 417053	R417067	NR	-	-	-	-
R447194	1-1/2 "	R 417051	R 417053	R417067	NR	-	-	-	-
R447194	1-3/4 "	R417054	R417056	R417068	NR	-	-	-	-
R447194	1-1/2 "	R417055	R417057	R417068	NR	-	-	-	-
R447194	1-3/4 "	R417054	R417056	R417068	NR	-	-	-	-
R447194	1-1/2 "	R 417050	R 417052	R417067	NR	-	-	-	-
R447195	1-3/4 "	R417054	R417056	R417068	NR	-	-	-	-
R447195	1-3/4 "	R417058	R417059	R417069	NR	-	-	-	-
R447194	1-1/2 "	R 417050	R 417052	R417067	NR	-	-	-	-
R447194	1-1/2 "	R 417051	R 417053	R417067	NR	-	-	-	-
R447194	1-1/2 "	R417055	R417057	R417068	NR	-	-	-	-

MAKE MODEL YEAR AXLE CODE AXLE WEIGHT	AXLE & BRK. TYPE	BRK. MFG.	BRAKE SIZE	FMSI	MERITOR DISC PAD OR BRAKE SHOE	MERITOR GUIDE PIN OR RETURN SPRING KIT	MERITOR CALIPER HWD. KIT OR RETURN SPRING KIT	MERITOR ADJUSTER KIT (LEFT WHEEL)	MERITOR ADJUSTER KIT (RIGHT WHEEL)
VOLVO(Cont.)									
F6(Cont.)									
1981									
	Fa		15-1/2 " x 5 "	1356	R46700021	R407048	R407049[349]	NR	NR
	Fa		15-1/2 " x 5 "	1356	R46700021	R407048	R407049[349]	NR	NR
	Fa		15-1/2 " x 5 "	1356	R46700021	R407048	R407049[349]	NR	NR
	Fa		15-1/2 " x 5 "	1356	R46700021	R407048	R407049[349]	NR	NR
	Fa		15-1/2 " x 5 "	1356	R46700021	R407048	R407049[349]	NR	NR
	Ra		15-1/2 " x 6 "	1357	-	R407048	R407049[349]	NR	NR
	Ra		15-1/2 " x 6 "	1357	-	R407048	R407049[349]	NR	NR
1980									
	Fa		15-1/2 " x 5 "	1356	R46700021	R407048	R407049[349]	NR	NR
	Fa		15-1/2 " x 5 "	1356	R46700021	R407048	R407049[349]	NR	NR
	Fa		15-1/2 " x 5 "	1356	R46700021	R407048	R407049[349]	NR	NR
	Fa		15-1/2 " x 5 "	1356	R46700021	R407048	R407049[349]	NR	NR
	Fa		15-1/2 " x 5 "	1356	R46700021	R407048	R407049[349]	NR	NR
	Fa		15-1/2 " x 5 "	1356	R46700021	R407048	R407049[349]	NR	NR
	Fa		15-1/2 " x 5 "	1356	R46700021	R407048	R407049[349]	NR	NR
	Fa		15-1/2 " x 5 "	1356	R46700021	R407048	R407049[349]	NR	NR
	Ra		15-1/2 " x 6 "	1357	-	R407048	R407049[349]	NR	NR
	Ra		15-1/2 " x 6 "	1357	-	R407048	R407049[349]	NR	NR
1979									
	Fa		15-1/2 " x 5 "	1356	R46700021	R407048	R407049[349]	NR	NR
	Fa		15-1/2 " x 5 "	1356	R46700021	R407048	R407049[349]	NR	NR
	Fa		15-1/2 " x 5 "	1356	R46700021	R407048	R407049[349]	NR	NR
	Fa		15-1/2 " x 5 "	1356	R46700021	R407048	R407049[349]	NR	NR
	Fa		15-1/2 " x 5 "	1356	R46700021	R407048	R407049[349]	NR	NR
	Fa		15-1/2 " x 5 "	1356	R46700021	R407048	R407049[349]	NR	NR
	Fa		15-1/2 " x 5 "	1356	R46700021	R407048	R407049[349]	NR	NR
	Fa		15-1/2 " x 5 "	1356	R46700021	R407048	R407049[349]	NR	NR
	Ra		15-1/2 " x 6 "	1357	-	R407048	R407049[349]	NR	NR
	Ra		15-1/2 " x 6 "	1357	-	R407048	R407049[349]	NR	NR
1978									
	Fa		15-1/2 " x 5 "	1356	R46700021	R407048	R407049[349]	NR	NR
	Fa		15-1/2 " x 5 "	1356	R46700021	R407048	R407049[349]	NR	NR
	Fa		15-1/2 " x 5 "	1356	R46700021	R407048	R407049[349]	NR	NR
	Fa		15-1/2 " x 5 "	1356	R46700021	R407048	R407049[349]	NR	NR
	Fa		15-1/2 " x 5 "	1356	R46700021	R407048	R407049[349]	NR	NR
	Fa		15-1/2 " x 5 "	1356	R46700021	R407048	R407049[349]	NR	NR
	Fa		15-1/2 " x 5 "	1356	R46700021	R407048	R407049[349]	NR	NR
	Fa		15-1/2 " x 5 "	1356	R46700021	R407048	R407049[349]	NR	NR
	Ra		15-1/2 " x 6 "	1357	-	R407048	R407049[349]	NR	NR
	Ra		15-1/2 " x 6 "	1357	-	R407048	R407049[349]	NR	NR
1977									
	Fa		15-1/2 " x 5 "	1356	R46700021	R407048	R407049	NR	NR
	Fa		15-1/2 " x 5 "	1356	R46700021	R407048	R407049	NR	NR
	Fa		15-1/2 " x 5 "	1356	R46700021	R407048	R407049	NR	NR
	Fa		15-1/2 " x 5 "	1356	R46700021	R407048	R407049	NR	NR
	Fa		15-1/2 " x 5 "	1356	R46700021	R407048	R407049	NR	NR
	Fa		15-1/2 " x 5 "	1356	R46700021	R407048	R407049	NR	NR
	Fa		15-1/2 " x 5 "	1356	R46700021	R407048	R407049	NR	NR
	Fa		15-1/2 " x 5 "	1356	R46700021	R407048	R407049	NR	NR
	Ra		15-1/2 " x 6 "	1357	R46700121	R407048	R407049	NR	NR
	Ra		15-1/2 " x 6 "	1357	R46700121	R407048	R407049	NR	NR
WORKHORSE									
CUSTOM CHASSIS 4 WHEEL DISC BRAKE									
2003									
Dual Piston Caliper	Fd	BX		7815 - D380	MD184	NR	NR	NR	NR
	Rd	BX		7815 - D380	MD184	NR	NR	NR	NR
	Rd	BX		7815 - D380	MD184	NR	NR	NR	NR
Single Piston Caliper	Fd	BX		7081A - D149	MD149	NR	NR	NR	NR
	Rd	BX		7081A - D149	MD149	NR	NR	NR	NR
	Rd	BX		7081A - D149	MD149	NR	NR	NR	NR
2002									
Dual Piston Caliper	Fd	BX		7815 - D380	MD184	NR	NR	NR	NR

82 - 5 Stud Rotor
405 - Rotor Only

186 - 10 Stud

349 - Contains Adjuster

MERITOR DRUM OR ROTOR NO.	CALIPER OR CYLINDER BORE SIZE	MERITOR CALIPER OR WHEEL CYLINDER (LEFT)	MERITOR CALIPER OR WHEEL CYLINDER (RIGHT)	MERITOR CALIPER OR WHEEL CYLINDER REPAIR KIT	MERITOR CALIPER PISTON	MERITOR MASTER CYLINDER	MERITOR MASTER CYLINDER KIT	MERITOR BRAKE HOSE (LEFT)	MERITOR BRAKE HOSE (RIGHT)
VOLVO(Cont.)									
F6(Cont.)									
R447194	1-3/4 "	R417054	R417056	R417068	NR	-	-	-	-
R447194	1-1/2 "	R 417051	R 417053	R417067	NR	-	-	-	-
R447194	1-1/2 "	R 417050	R 417052	R417067	NR	-	-	-	-
R447194	1-1/2 "	R417055	R417057	R417068	NR	-	-	-	-
R447194	1-3/4 "	R417054	R417056	R417068	NR	-	-	-	-
R447195	1-3/4 "	R417054	R417056	R417068	NR	-	-	-	-
R447195	1-3/4 "	R417058	R417059	R417069	NR	-	-	-	-
R447194	1-1/2 "	R 417051	R 417053	R417067	NR	-	-	-	-
R447194	1-1/2 "	R417055	R417057	R417068	NR	-	-	-	-
R447194	1-1/2 "	R 417050	R 417052	R417067	NR	-	-	-	-
R447194	1-1/2 "	R 417051	R 417053	R417067	NR	-	-	-	-
R447194	1-1/2 "	R 417050	R 417052	R417067	NR	-	-	-	-
R447194	1-1/2 "	R417055	R417057	R417068	NR	-	-	-	-
R447194	1-3/4 "	R417054	R417056	R417068	NR	-	-	-	-
R447194	1-3/4 "	R417054	R417056	R417068	NR	-	-	-	-
R447195	1-3/4 "	R417054	R417056	R417068	NR	-	-	-	-
R447195	1-3/4 "	R417058	R417059	R417069	NR	-	-	-	-
R447194	1-1/2 "	R 417050	R 417052	R417067	NR	-	-	-	-
R447194	1-1/2 "	R 417051	R 417053	R417067	NR	-	-	-	-
R447194	1-1/2 "	R417055	R417057	R417068	NR	-	-	-	-
R447194	1-3/4 "	R417054	R417056	R417068	NR	-	-	-	-
R447194	1-1/2 "	R 417051	R 417053	R417067	NR	-	-	-	-
R447194	1-1/2 "	R417055	R417057	R417068	NR	-	-	-	-
R447194	1-3/4 "	R417054	R417056	R417068	NR	-	-	-	-
R447194	1-1/2 "	R 417050	R 417052	R417067	NR	-	-	-	-
R447195	1-3/4 "	R417058	R417059	R417069	NR	-	-	-	-
R447195	1-3/4 "	R417054	R417056	R417068	NR	-	-	-	-
R447194	1-1/2 "	R 417051	R 417053	R417067	NR	-	-	-	-
R447194	1-1/2 "	R 417050	R 417052	R417067	NR	-	-	-	-
R447194	1-3/4 "	R417054	R417056	R417068	NR	-	-	-	-
R447194	1-1/2 "	R417055	R417057	R417068	NR	-	-	-	-
R447194	1-1/2 "	R 417051	R 417053	R417067	NR	-	-	-	-
R447194	1-3/4 "	R417054	R417056	R417068	NR	-	-	-	-
R447194	1-1/2 "	R 417050	R 417052	R417067	NR	-	-	-	-
R447194	1-1/2 "	R417055	R417057	R417068	NR	-	-	-	-
R447195	1-3/4 "	R417058	R417059	R417069	NR	-	-	-	-
R447195	1-3/4 "	R417054	R417056	R417068	NR	-	-	-	-
R447194	1-1/2 "	R417055	R417057	R417068	NR	-	-	-	-
R447194	1-1/2 "	R 417050	R 417052	R417067	NR	-	-	-	-
R447194	1-1/2 "	R417055	R417057	R417068	NR	-	-	-	-
R447194	1-1/2 "	R 417050	R 417052	R417067	NR	-	-	-	-
R447194	1-3/4 "	R417054	R417056	R417068	NR	-	-	-	-
R447194	1-1/2 "	R 417051	R 417053	R417067	NR	-	-	-	-
R447194	1-1/2 "	R 417051	R 417053	R417067	NR	-	-	-	-
R447194	1-3/4 "	R417054	R417056	R417068	NR	-	-	-	-
R447195	1-3/4 "	R417054	R417056	R417068	NR	-	-	-	-
R447195	1-3/4 "	R417058	R417059	R417069	NR	-	-	-	-
WORKHORSE									
CUSTOM CHASSIS 4 WHEEL DISC BRAKE									
R44141483[186]	66mm	R42R55805	R42R55805	-	-	R4111982	-	-	-
R44145028[405]	66mm	R42R55805	R42R55805	-	-	R4111982	-	-	-
R44141483[186]	66mm	R42R55805	R42R55805	-	-	R4111982	-	-	-
R4411316[82]	86mm	R42R55200	R42R55199	R4066780	R4090021	R4111982	-	-	-
R44141483[186]	86mm	R42R55200	R42R55199	R4066780	R4090021	R4111982	-	-	-
R4411316[82]	86mm	R42R55200	R42R55199	R4066780	R4090021	R4111982	-	-	-
R44141483[186]	66mm	R42R55805	R42R55805	-	-	R4111982	-	-	-

MAKE MODEL YEAR AXLE CODE AXLE WEIGHT	AXLE & BRK. TYPE	BRK. MFG.	BRAKE SIZE	FMSI	MERITOR DISC PAD OR BRAKE SHOE	MERITOR GUIDE PIN OR RETURN SPRING KIT	MERITOR CALIPER HWD. KIT OR RETURN SPRING KIT	MERITOR ADJUSTER KIT (LEFT WHEEL)	MERITOR ADJUSTER KIT (RIGHT WHEEL)
WORKHORSE(Cont.)									
CUSTOM CHASSIS 4 WHEEL DISC BRAKE(Cont.)									
2002									
	Rd	BX		7815 - D380	MD184	NR	NR	NR	NR
	Rd	BX		7815 - D380	MD184	NR	NR	NR	NR
Single Piston Caliper	Fd	BX		7081A - D149	MD149	NR	NR	NR	NR
	Rd	BX		7081A - D149	MD149	NR	NR	NR	NR
	Rd	BX		7081A - D149	MD149	NR	NR	NR	NR
2001									
Dual Piston Caliper	Fd	BX		7815 - D380	MD184	NR	NR	NR	NR
	Rd	BX		7815 - D380	MD184	NR	NR	NR	NR
	Rd	BX		7815 - D380	MD184	NR	NR	NR	NR
Single Piston Caliper	Fd	BX		7081A - D149	MD149	NR	NR	NR	NR
	Rd	BX		7081A - D149	MD149	NR	NR	NR	NR
	Rd	BX		7081A - D149	MD149	NR	NR	NR	NR
2000									
Dual Piston Caliper	Fd	BX		7815 - D380	MD184	NR	NR	NR	NR
	Rd	BX		7815 - D380	MD184	NR	NR	NR	NR
	Rd	BX		7815 - D380	MD184	NR	NR	NR	NR
Single Piston Caliper	Fd	BX		7081A - D149	MD149	NR	NR	NR	NR
	Rd	BX		7081A - D149	MD149	NR	NR	NR	NR
	Rd	BX		7081A - D149	MD149	NR	NR	NR	NR
1999									
Dual Piston Caliper	Fd	BX		7815 - D380	MD184	NR	NR	NR	NR
	Rd	BX		7815 - D380	MD184	NR	NR	NR	NR
	Rd	BX		7815 - D380	MD184	NR	NR	NR	NR
Single Piston Caliper	Fd	BX		7081A - D149	MD149	NR	NR	NR	NR
	Rd	BX		7081A - D149	MD149	NR	NR	NR	NR
	Rd	BX		7081A - D149	MD149	NR	NR	NR	NR
1998									
Dual Piston Caliper	Fd	BX		7815 - D380	MD184	NR	NR	NR	NR
	Rd	BX		7815 - D380	MD184	NR	NR	NR	NR
	Rd	BX		7815 - D380	MD184	NR	NR	NR	NR
Single Piston Caliper	Fd	BX		7081A - D149	MD149	NR	NR	NR	NR
	Rd	BX		7081A - D149	MD149	NR	NR	NR	NR
	Rd	BX		7081A - D149	MD149	NR	NR	NR	NR
1997									
Dual Piston Caliper	Fd	BX		7815 - D380	MD184	NR	NR	NR	NR
	Rd	BX		7815 - D380	MD184	NR	NR	NR	NR
	Rd	BX		7815 - D380	MD184	NR	NR	NR	NR
Single Piston Caliper	Fd	BX		7081A - D149	MD149	NR	NR	NR	NR
	Rd	BX		7081A - D149	MD149	NR	NR	NR	NR
	Rd	BX		7081A - D149	MD149	NR	NR	NR	NR
1996									
Dual Piston Caliper	Fd	BX		7815 - D380	MD184	NR	NR	NR	NR
	Rd	BX		7815 - D380	MD184	NR	NR	NR	NR
	Rd	BX		7815 - D380	MD184	NR	NR	NR	NR
Single Piston Caliper	Fd	BX		7081A - D149	MD149	NR	NR	NR	NR
	Rd	BX		7081A - D149	MD149	NR	NR	NR	NR
	Rd	BX		7081A - D149	MD149	NR	NR	NR	NR
1995									
Dual Piston Caliper	Fd	BX		7815 - D380	MD184	NR	NR	NR	NR
	Rd	BX		7815 - D380	MD184	NR	NR	NR	NR
	Rd	BX		7815 - D380	MD184	NR	NR	NR	NR
Single Piston Caliper	Fd	BX		7081A - D149	MD149	NR	NR	NR	NR
	Rd	BX		7081A - D149	MD149	NR	NR	NR	NR
	Rd	BX		7081A - D149	MD149	NR	NR	NR	NR
CUSTOM CHASSIS FRONT DISC REAR DRUM									
2003 13 x 2 1/2 Rear Brake	Ra	GM	13 " x 2-1/2 "	2042AT - 451	R46451	R40H378	R40H7055	R40H2588	R40H2589
13 x 2 1/2 Rear Brake 2 Wheel ABS	Fd	BX		7081A - D149	MD149	NR	NR	NR	NR
13 x 2 1/2 Rear Brake 4 Wheel ABS	Fd	BX		7081A - D149	MD149	NR	NR	NR	NR
13 x 3 1/2 Rear Brake	Ra	GM	13 " x 3-1/2 "	2157T - 452	R46452	R40H378	R40H7055	R40H2588	R40H2589

82 - 5 Stud Rotor
186 - 10 Stud
280 - 10 1/2" Ring Gear
282 - 10 1/2" Ring Gear, First Design; Use 3 3/8" Outside Diameter Axle Tubes
381 - Rotor and Hub One Piece Assembly W/O ABS Ring
405 - Rotor Only

MERITOR DRUM OR ROTOR NO.	CALIPER OR CYLINDER BORE SIZE	MERITOR CALIPER OR WHEEL CYLINDER (LEFT)	MERITOR CALIPER OR WHEEL CYLINDER (RIGHT)	MERITOR CALIPER OR WHEEL CYLINDER REPAIR KIT	MERITOR CALIPER PISTON	MERITOR MASTER CYLINDER	MERITOR MASTER CYLINDER KIT	MERITOR BRAKE HOSE (LEFT)	MERITOR BRAKE HOSE (RIGHT)
WORKHORSE(Cont.)									
CUSTOM CHASSIS 4 WHEEL DISC BRAKE(Cont.)									
R44141483[186]	66mm	R42R55805	R42R55805	-	-	R4111982	-	-	-
R44145028[405]	66mm	R42R55805	R42R55805	-	-	R4111982	-	-	-
R4411316[82]	86mm	R42R55200	R42R55199	R4066780	R4090021	R4111982	-	-	-
R44141483[186]	86mm	R42R55200	R42R55199	R4066780	R4090021	R4111982	-	-	-
R4411316[82]	86mm	R42R55200	R42R55199	R4066780	R4090021	R4111982	-	-	-
R44141483[186]	66mm	R42R55805	R42R55805	-	-	R4111982	-	-	-
R44141483[186]	66mm	R42R55805	R42R55805	-	-	R4111982	-	-	-
R44145028[405]	66mm	R42R55805	R42R55805	-	-	R4111982	-	-	-
R4411316[82]	86mm	R42R55200	R42R55199	R4066780	R4090021	R4111982	-	-	-
R4411316[82]	86mm	R42R55200	R42R55199	R4066780	R4090021	R4111982	-	-	-
R44141483[186]	86mm	R42R55200	R42R55199	R4066780	R4090021	R4111982	-	-	-
R44141483[186]	66mm	R42R55805	R42R55805	-	-	R4111982	-	-	-
R44141483[186]	66mm	R42R55805	R42R55805	-	-	R4111982	-	-	-
R44145028[405]	66mm	R42R55805	R42R55805	-	-	R4111982	-	-	-
R4411316[82]	86mm	R42R55200	R42R55199	R4066780	R4090021	R4111982	-	-	-
R4411316[82]	86mm	R42R55200	R42R55199	R4066780	R4090021	R4111982	-	-	-
R44141483[186]	86mm	R42R55200	R42R55199	R4066780	R4090021	R4111982	-	-	-
R44141483[186]	66mm	R42R55805	R42R55805	-	-	R4111982	-	-	-
R44145028[405]	66mm	R42R55805	R42R55805	-	-	R4111982	-	-	-
R44141483[186]	66mm	R42R55805	R42R55805	-	-	R4111982	-	-	-
R4411316[82]	86mm	R42R55200	R42R55199	R4066780	R4090021	R4111982	-	-	-
R4411316[82]	86mm	R42R55200	R42R55199	R4066780	R4090021	R4111982	-	-	-
R44141483[186]	86mm	R42R55200	R42R55199	R4066780	R4090021	R4111982	-	-	-
R44141483[186]	66mm	R42R55805	R42R55805	-	-	R4111982	-	-	-
R44145028[405]	66mm	R42R55805	R42R55805	-	-	R4111982	-	-	-
R44141483[186]	66mm	R42R55805	R42R55805	-	-	R4111982	-	-	-
R4411316[82]	86mm	R42R55200	R42R55199	R4066780	R4090021	R4111982	-	-	-
R4411316[82]	86mm	R42R55200	R42R55199	R4066780	R4090021	R4111982	-	-	-
R44141483[186]	86mm	R42R55200	R42R55199	R4066780	R4090021	R4111982	-	-	-
R44141483[186]	66mm	R42R55805	R42R55805	-	-	R4111982	-	-	-
R44145028[405]	66mm	R42R55805	R42R55805	-	-	R4111982	-	-	-
R44141483[186]	66mm	R42R55805	R42R55805	-	-	R4111982	-	-	-
R4411316[82]	86mm	R42R55200	R42R55199	R4066780	R4090021	R4111982	-	-	-
R4411316[82]	86mm	R42R55200	R42R55199	R4066780	R4090021	R4111982	-	-	-
R44141483[186]	86mm	R42R55200	R42R55199	R4066780	R4090021	R4111982	-	-	-
R44141483[186]	66mm	R42R55805	R42R55805	-	-	R4111982	-	-	-
R44141483[186]	66mm	R42R55805	R42R55805	-	-	R4111982	-	-	-
R44145028[405]	66mm	R42R55805	R42R55805	-	-	R4111982	-	-	-
R4411316[82]	86mm	R42R55200	R42R55199	R4066780	R4090021	R4111982	-	-	-
R44141483[186]	86mm	R42R55200	R42R55199	R4066780	R4090021	R4111982	-	-	-
R4411316[82]	86mm	R42R55200	R42R55199	R4066780	R4090021	R4111982	-	-	-
R44141483[186]	66mm	R42R55805	R42R55805	-	-	R4111982	-	-	-
R44141483[186]	66mm	R42R55805	R42R55805	-	-	R4111982	-	-	-
R44145028[405]	66mm	R42R55805	R42R55805	-	-	R4111982	-	-	-
R4411316[82]	86mm	R42R55200	R42R55199	R4066780	R4090021	R4111982	-	-	-
R4411316[82]	86mm	R42R55200	R42R55199	R4066780	R4090021	R4111982	-	-	-
R44141483[186]	86mm	R42R55200	R42R55199	R4066780	R4090021	R4111982	-	-	-
CUSTOM CHASSIS FRONT DISC REAR DRUM									
R44140363[282]	1-1/16 "	R4133709	R4133709	-	-	R4111982	-	-	-
R44141186[381]	86mm	R42R55200	R42R55199	R4066780	R4090021	R4111982	-	-	-
R44141859[381]	86mm	R42R55200	R42R55199	R4066780	R4090021	R4111982	-	-	-
R44140388[280]	1-3/16 "	R4133708	R4133708	-	-	R4111982	-	-	-

MAKE MODEL YEAR AXLE CODE AXLE WEIGHT	AXLE & BRK. TYPE	BRK. MFG.	BRAKE SIZE	FMSI	MERITOR DISC PAD OR BRAKE SHOE	MERITOR GUIDE PIN OR RETURN SPRING KIT	MERITOR CALIPER HWD. KIT OR RETURN SPRING KIT	MERITOR ADJUSTER KIT (LEFT WHEEL)	MERITOR ADJUSTER KIT (RIGHT WHEEL)
WORKHORSE(Cont.)									
CUSTOM CHASSIS FRONT DISC REAR DRUM(Cont.)									
2003 13 x 3 1/2 Rear Brake - DRW w/ 4 Wheel ABS	Fd	BX		7081A - D149	MD149	NR	NR	NR	NR
13 x 3 1/2 Rear Brake - DRW w/ I Beam Frt Susp	Fd	BX		7081A - D149	MD149	NR	NR	NR	NR
13 x 3 1/2 Rear Brake - DRW w/ Ind Frt Susp	Fd	BX		7081A - D149	MD149	NR	NR	NR	NR
13 x 3 1/2 Rear Brake - SRW	Fd	BX		7081A - D149	MD149	NR	NR	NR	NR
2002 13 x 2 1/2 Rear Brake	Ra	GM	13 " x 2-1/2 "	2042AT - 451	R46451	R40H378	R40H7055	R40H2588	R40H2589
13 x 2 1/2 Rear Brake 2 Wheel ABS	Fd	BX		7081A - D149	MD149	NR	NR	NR	NR
13 x 2 1/2 Rear Brake 4 Wheel ABS	Fd	BX		7081A - D149	MD149	NR	NR	NR	NR
13 x 3 1/2 Rear Brake	Ra	GM	13 " x 3-1/2 "	2157T - 452	R46452	R40H378	R40H7055	R40H2588	R40H2589
13 x 3 1/2 Rear Brake - DRW w/ 4 Wheel ABS	Fd	BX		7081A - D149	MD149	NR	NR	NR	NR
13 x 3 1/2 Rear Brake - DRW w/ I Beam Frt Susp	Fd	BX		7081A - D149	MD149	NR	NR	NR	NR
13 x 3 1/2 Rear Brake - DRW w/ Ind Frt Susp	Fd	BX		7081A - D149	MD149	NR	NR	NR	NR
13 x 3 1/2 Rear Brake - SRW	Fd	BX		7081A - D149	MD149	NR	NR	NR	NR
2001 13 x 2 1/2 Rear Brake	Ra	GM	13 " x 2-1/2 "	2042AT - 451	R46451	R40H378	R40H7055	R40H2588	R40H2589
13 x 2 1/2 Rear Brake 2 Wheel ABS	Fd	BX		7081A - D149	MD149	NR	NR	NR	NR
13 x 2 1/2 Rear Brake 4 Wheel ABS	Fd	BX		7081A - D149	MD149	NR	NR	NR	NR
13 x 3 1/2 Rear Brake	Ra	GM	13 " x 3-1/2 "	2157T - 452	R46452	R40H378	R40H7055	R40H2588	R40H2589
13 x 3 1/2 Rear Brake - DRW w/ 4 Wheel ABS	Fd	BX		7081A - D149	MD149	NR	NR	NR	NR
13 x 3 1/2 Rear Brake - DRW w/ I Beam Frt Susp	Fd	BX		7081A - D149	MD149	NR	NR	NR	NR
13 x 3 1/2 Rear Brake - DRW w/ Ind Frt Susp	Fd	BX		7081A - D149	MD149	NR	NR	NR	NR
13 x 3 1/2 Rear Brake - SRW	Fd	BX		7081A - D149	MD149	NR	NR	NR	NR
2000 13 x 2 1/2 Rear Brake	Ra	GM	13 " x 2-1/2 "	2042AT - 451	R46451	R40H378	R40H7055	R40H2588	R40H2589
13 x 2 1/2 Rear Brake 2 Wheel ABS	Fd	BX		7081A - D149	MD149	NR	NR	NR	NR
13 x 2 1/2 Rear Brake 4 Wheel ABS	Fd	BX		7081A - D149	MD149	NR	NR	NR	NR
13 x 3 1/2 Rear Brake	Ra	GM	13 " x 3-1/2 "	2157T - 452	R46452	R40H378	R40H7055	R40H2588	R40H2589
13 x 3 1/2 Rear Brake - DRW w/ 4 Wheel ABS	Fd	BX		7081A - D149	MD149	NR	NR	NR	NR
13 x 3 1/2 Rear Brake - DRW w/ I Beam Frt Susp	Fd	BX		7081A - D149	MD149	NR	NR	NR	NR
13 x 3 1/2 Rear Brake - DRW w/ Ind Frt Susp	Fd	BX		7081A - D149	MD149	NR	NR	NR	NR
13 x 3 1/2 Rear Brake - SRW	Fd	BX		7081A - D149	MD149	NR	NR	NR	NR
1999 13 x 2 1/2 Rear Brake	Ra	GM	13 " x 2-1/2 "	2042AT - 451	R46451	R40H378	R40H7055	R40H2588	R40H2589
13 x 2 1/2 Rear Brake 2 Wheel ABS	Fd	BX		7081A - D149	MD149	NR	NR	NR	NR
13 x 2 1/2 Rear Brake 4 Wheel ABS	Fd	BX		7081A - D149	MD149	NR	NR	NR	NR
13 x 3 1/2 Rear Brake	Ra	GM	13 " x 3-1/2 "	2157T - 452	R46452	R40H378	R40H7055	R40H2588	R40H2589
13 x 3 1/2 Rear Brake - DRW w/ 4 Wheel ABS	Fd	BX		7081A - D149	MD149	NR	NR	NR	NR
13 x 3 1/2 Rear Brake - DRW w/ I Beam Frt Susp	Fd	BX		7081A - D149	MD149	NR	NR	NR	NR

32 - For rotor only use R44141480

280 - 10 1/2" Ring Gear

282 - 10 1/2" Ring Gear, First Design; Use 3 3/8" Outside Diameter Axle Tubes

381 - Rotor and Hub One Piece Assembly W/O ABS Ring

394 - 8 Stud Rotor and Hub one piece Assembly

MERITOR DRUM OR ROTOR NO.	CALIPER OR CYLINDER BORE SIZE	MERITOR CALIPER OR WHEEL CYLINDER (LEFT)	MERITOR CALIPER OR WHEEL CYLINDER (RIGHT)	MERITOR CALIPER OR WHEEL CYLINDER REPAIR KIT	MERITOR CALIPER PISTON	MERITOR MASTER CYLINDER	MERITOR MASTER CYLINDER KIT	MERITOR BRAKE HOSE (LEFT)	MERITOR BRAKE HOSE (RIGHT)
WORKHORSE(Cont.)									
CUSTOM CHASSIS FRONT DISC REAR DRUM(Cont.)									
R44141862[394]	86mm	R42R55200	R42R55199	R4066780	R4090021	R4111982	-	-	-
R44145368	86mm	R42R55200	R42R55199	R4066780	R4090021	R4111982	-	-	-
R44141130[32]	86mm	R42R55200	R42R55199	R4066780	R4090021	R4111982	-	-	-
R44141152[381]	86mm	R42R55200	R42R55199	R4066780	R4090021	R4111982	-	-	-
R44140363[282]	1-1/16 "	R4133709	R4133709	-	-	R4111982	-	-	-
R44141186[381]	86mm	R42R55200	R42R55199	R4066780	R4090021	R4111982	-	-	-
R44141859[381]	86mm	R42R55200	R42R55199	R4066780	R4090021	R4111982	-	-	-
R44140388[280]	1-3/16 "	R4133708	R4133708	-	-	R4111982	-	-	-
R44141862[394]	86mm	R42R55200	R42R55199	R4066780	R4090021	R4111982	-	-	-
R44145368	86mm	R42R55200	R42R55199	R4066780	R4090021	R4111982	-	-	-
R44141130[32]	86mm	R42R55200	R42R55199	R4066780	R4090021	R4111982	-	-	-
R44141152[381]	86mm	R42R55200	R42R55199	R4066780	R4090021	R4111982	-	-	-
R44140363[282]	1-1/16 "	R4133709	R4133709	-	-	R4111982	-	-	-
R44141186[381]	86mm	R42R55200	R42R55199	R4066780	R4090021	R4111982	-	-	-
R44141859[381]	86mm	R42R55200	R42R55199	R4066780	R4090021	R4111982	-	-	-
R44140388[280]	1-3/16 "	R4133708	R4133708	-	-	R4111982	-	-	-
R44141862[394]	86mm	R42R55200	R42R55199	R4066780	R4090021	R4111982	-	-	-
R44145368	86mm	R42R55200	R42R55199	R4066780	R4090021	R4111982	-	-	-
R44141130[32]	86mm	R42R55200	R42R55199	R4066780	R4090021	R4111982	-	-	-
R44141152[381]	86mm	R42R55200	R42R55199	R4066780	R4090021	R4111982	-	-	-
R44140363[282]	1-1/16 "	R4133709	R4133709	-	-	R4111982	-	-	-
R44141186[381]	86mm	R42R55200	R42R55199	R4066780	R4090021	R4111982	-	-	-
R44141859[381]	86mm	R42R55200	R42R55199	R4066780	R4090021	R4111982	-	-	-
R44140388[280]	1-3/16 "	R4133708	R4133708	-	-	R4111982	-	-	-
R44141862[394]	86mm	R42R55200	R42R55199	R4066780	R4090021	R4111982	-	-	-
R44145368	86mm	R42R55200	R42R55199	R4066780	R4090021	R4111982	-	-	-
R44141130[32]	86mm	R42R55200	R42R55199	R4066780	R4090021	R4111982	-	-	-
R44141152[381]	86mm	R42R55200	R42R55199	R4066780	R4090021	R4111982	-	-	-
R44140363[282]	1-1/16 "	R4133709	R4133709	-	-	R4111982	-	-	-
R44141186[381]	86mm	R42R55200	R42R55199	R4066780	R4090021	R4111982	-	-	-
R44141859[381]	86mm	R42R55200	R42R55199	R4066780	R4090021	R4111982	-	-	-
R44140388[280]	1-3/16 "	R4133708	R4133708	-	-	R4111982	-	-	-
R44141862[394]	86mm	R42R55200	R42R55199	R4066780	R4090021	R4111982	-	-	-
R44145368	86mm	R42R55200	R42R55199	R4066780	R4090021	R4111982	-	-	-

MAKE MODEL YEAR AXLE CODE AXLE WEIGHT	AXLE & BRK. TYPE	BRK. MFG.	BRAKE SIZE	FMSI	MERITOR DISC PAD OR BRAKE SHOE	MERITOR GUIDE PIN OR RETURN SPRING KIT	MERITOR CALIPER HWD. KIT OR RETURN SPRING KIT	MERITOR ADJUSTER KIT (LEFT WHEEL)	MERITOR ADJUSTER KIT (RIGHT WHEEL)
WORKHORSE(Cont.)									
CUSTOM CHASSIS FRONT DISC REAR DRUM(Cont.)									
1999 13 x 3 1/2 Rear Brake - DRW w/ Ind Frt Susp	Fd	BX		7081A - D149	MD149	NR	NR	NR	NR
13 x 3 1/2 Rear Brake - SRW	Fd	BX		7081A - D149	MD149	NR	NR	NR	NR
1998 13 x 2 1/2 Rear Brake	Ra	GM	13 " x 2-1/2 "	2042AT - 451	R46451	R40H378	R40H7055	R40H2588	R40H2589
13 x 2 1/2 Rear Brake 2 Wheel ABS	Fd	BX		7081A - D149	MD149	NR	NR	NR	NR
13 x 2 1/2 Rear Brake 4 Wheel ABS	Fd	BX		7081A - D149	MD149	NR	NR	NR	NR
13 x 3 1/2 Rear Brake	Ra	GM	13 " x 3-1/2 "	2157T - 452	R46452	R40H378	R40H7055	R40H2588	R40H2589
13 x 3 1/2 Rear Brake - DRW w/ 4 Wheel ABS	Fd	BX		7081A - D149	MD149	NR	NR	NR	NR
13 x 3 1/2 Rear Brake - DRW w/ I Beam Frt Susp	Fd	BX		7081A - D149	MD149	NR	NR	NR	NR
13 x 3 1/2 Rear Brake - DRW w/ Ind Frt Susp	Fd	BX		7081A - D149	MD149	NR	NR	NR	NR
13 x 3 1/2 Rear Brake - SRW	Fd	BX		7081A - D149	MD149	NR	NR	NR	NR
1997 13 x 2 1/2 Rear Brake	Ra	GM	13 " x 2-1/2 "	2042AT - 451	R46451	R40H378	R40H7055	R40H2588	R40H2589
13 x 2 1/2 Rear Brake 2 Wheel ABS	Fd	BX		7081A - D149	MD149	NR	NR	NR	NR
13 x 2 1/2 Rear Brake 4 Wheel ABS	Fd	BX		7081A - D149	MD149	NR	NR	NR	NR
13 x 3 1/2 Rear Brake	Ra	GM	13 " x 3-1/2 "	2157T - 452	R46452	R40H378	R40H7055	R40H2588	R40H2589
13 x 3 1/2 Rear Brake - DRW w/ 4 Wheel ABS	Fd	BX		7081A - D149	MD149	NR	NR	NR	NR
13 x 3 1/2 Rear Brake - DRW w/ I Beam Frt Susp	Fd	BX		7081A - D149	MD149	NR	NR	NR	NR
13 x 3 1/2 Rear Brake - DRW w/ Ind Frt Susp	Fd	BX		7081A - D149	MD149	NR	NR	NR	NR
13 x 3 1/2 Rear Brake - SRW	Fd	BX		7081A - D149	MD149	NR	NR	NR	NR
1996 13 x 2 1/2 Rear Brake	Ra	GM	13 " x 2-1/2 "	2042AT - 451	R46451	R40H378	R40H7055	R40H2588	R40H2589
13 x 2 1/2 Rear Brake 2 Wheel ABS	Fd	BX		7081A - D149	MD149	NR	NR	NR	NR
13 x 2 1/2 Rear Brake 4 Wheel ABS	Fd	BX		7081A - D149	MD149	NR	NR	NR	NR
13 x 3 1/2 Rear Brake	Ra	GM	13 " x 3-1/2 "	2157T - 452	R46452	R40H378	R40H7055	R40H2588	R40H2589
13 x 3 1/2 Rear Brake - DRW w/ 4 Wheel ABS	Fd	BX		7081A - D149	MD149	NR	NR	NR	NR
13 x 3 1/2 Rear Brake - DRW w/ I Beam Frt Susp	Fd	BX		7081A - D149	MD149	NR	NR	NR	NR
13 x 3 1/2 Rear Brake - DRW w/ Ind Frt Susp	Fd	BX		7081A - D149	MD149	NR	NR	NR	NR
13 x 3 1/2 Rear Brake - SRW	Fd	BX		7081A - D149	MD149	NR	NR	NR	NR
1995 13 x 2 1/2 Rear Brake	Ra	GM	13 " x 2-1/2 "	2042AT - 451	R46451	R40H378	R40H7055	R40H2588	R40H2589
13 x 2 1/2 Rear Brake 2 Wheel ABS	Fd	BX		7081A - D149	MD149	NR	NR	NR	NR
13 x 2 1/2 Rear Brake 4 Wheel ABS	Fd	BX		7081A - D149	MD149	NR	NR	NR	NR
13 x 3 1/2 Rear Brake	Ra	GM	13 " x 3-1/2 "	2157T - 452	R46452	R40H378	R40H7055	R40H2588	R40H2589
13 x 3 1/2 Rear Brake - DRW w/ 4 Wheel ABS	Fd	BX		7081A - D149	MD149	NR	NR	NR	NR
13 x 3 1/2 Rear Brake - DRW w/ I Beam Frt Susp	Fd	BX		7081A - D149	MD149	NR	NR	NR	NR
13 x 3 1/2 Rear Brake - DRW w/ Ind Frt Susp	Fd	BX		7081A - D149	MD149	NR	NR	NR	NR
13 x 3 1/2 Rear Brake - SRW	Fd	BX		7081A - D149	MD149	NR	NR	NR	NR

32 - For rotor only use R44141480

280 - 10 1/2" Ring Gear

282 - 10 1/2" Ring Gear, First Design; Use 3 3/8" Outside Diameter Axle Tubes

381 - Rotor and Hub One Piece Assembly W/O ABS Ring

394 - 8 Stud Rotor and Hub one piece Assembly

MERITOR DRUM OR ROTOR NO.	CALIPER OR CYLINDER BORE SIZE	MERITOR CALIPER OR WHEEL CYLINDER (LEFT)	MERITOR CALIPER OR WHEEL CYLINDER (RIGHT)	MERITOR CALIPER OR WHEEL CYLINDER REPAIR KIT	MERITOR CALIPER PISTON	MERITOR MASTER CYLINDER	MERITOR MASTER CYLINDER KIT	MERITOR BRAKE HOSE (LEFT)	MERITOR BRAKE HOSE (RIGHT)
WORKHORSE(Cont.)									
CUSTOM CHASSIS FRONT DISC REAR DRUM(Cont.)									
R44141130[32]	86mm	R42R55200	R42R55199	R4066780	R4090021	R4111982	-	-	-
R44141152[381]	86mm	R42R55200	R42R55199	R4066780	R4090021	R4111982	-	-	-
R44140363[282]	1-1/16 "	R4133709	R4133709	-	-	R4111982	-	-	-
R44141186[381]	86mm	R42R55200	R42R55199	R4066780	R4090021	R4111982	-	-	-
R44141859[381]	86mm	R42R55200	R42R55199	R4066780	R4090021	R4111982	-	-	-
R44140388[280]	1-3/16 "	R4133708	R4133708	-	-	R4111982	-	-	-
R44141862[394]	86mm	R42R55200	R42R55199	R4066780	R4090021	R4111982	-	-	-
R44145368	86mm	R42R55200	R42R55199	R4066780	R4090021	R4111982	-	-	-
R44141130[32]	86mm	R42R55200	R42R55199	R4066780	R4090021	R4111982	-	-	-
R44141152[381]	86mm	R42R55200	R42R55199	R4066780	R4090021	R4111982	-	-	-
R44140363[282]	1-1/16 "	R4133709	R4133709	-	-	R4111982	-	-	-
R44141186[381]	86mm	R42R55200	R42R55199	R4066780	R4090021	R4111982	-	-	-
R44141859[381]	86mm	R42R55200	R42R55199	R4066780	R4090021	R4111982	-	-	-
R44140388[280]	1-3/16 "	R4133708	R4133708	-	-	R4111982	-	-	-
R44141862[394]	86mm	R42R55200	R42R55199	R4066780	R4090021	R4111982	-	-	-
R44145368	86mm	R42R55200	R42R55199	R4066780	R4090021	R4111982	-	-	-
R44141130[32]	86mm	R42R55200	R42R55199	R4066780	R4090021	R4111982	-	-	-
R44141152[381]	86mm	R42R55200	R42R55199	R4066780	R4090021	R4111982	-	-	-
R44140363[282]	1-1/16 "	R4133709	R4133709	-	-	R4111982	-	-	-
R44141186[381]	86mm	R42R55200	R42R55199	R4066780	R4090021	R4111982	-	-	-
R44141859[381]	86mm	R42R55200	R42R55199	R4066780	R4090021	R4111982	-	-	-
R44140388[280]	1-3/16 "	R4133708	R4133708	-	-	R4111982	-	-	-
R44141862[394]	86mm	R42R55200	R42R55199	R4066780	R4090021	R4111982	-	-	-
R44145368	86mm	R42R55200	R42R55199	R4066780	R4090021	R4111982	-	-	-
R44141130[32]	86mm	R42R55200	R42R55199	R4066780	R4090021	R4111982	-	-	-
R44141152[381]	86mm	R42R55200	R42R55199	R4066780	R4090021	R4111982	-	-	-
R44140363[282]	1-1/16 "	R4133709	R4133709	-	-	R4111982	-	-	-
R44141186[381]	86mm	R42R55200	R42R55199	R4066780	R4090021	R4111982	-	-	-
R44141859[381]	86mm	R42R55200	R42R55199	R4066780	R4090021	R4111982	-	-	-
R44140388[280]	1-3/16 "	R4133708	R4133708	-	-	R4111982	-	-	-
R44141862[394]	86mm	R42R55200	R42R55199	R4066780	R4090021	R4111982	-	-	-
R44145368	86mm	R42R55200	R42R55199	R4066780	R4090021	R4111982	-	-	-
R44141130[32]	86mm	R42R55200	R42R55199	R4066780	R4090021	R4111982	-	-	-
R44141152[381]	86mm	R42R55200	R42R55199	R4066780	R4090021	R4111982	-	-	-

MAKE MODEL YEAR AXLE CODE AXLE WEIGHT	AXLE & BRK. TYPE	BRK. MFG.	BRAKE SIZE	FMSI	MERITOR DISC PAD OR BRAKE SHOE	MERITOR GUIDE PIN OR RETURN SPRING KIT	MERITOR CALIPER HWD. KIT OR RETURN SPRING KIT	MERITOR ADJUSTER KIT (LEFT WHEEL)	MERITOR ADJUSTER KIT (RIGHT WHEEL)
WORKHORSE(Cont.)									
CUSTOM CHASSIS FRONT DISC REAR DRUM(Cont.)									
1994 13 x 2 1/2 Rear Brake	Fd	BX		7084A - D153	MD392	NR	NR	NR	NR
13 x 3 1/2 Rear Brake	Fd				-	NR	NR	NR	NR
UFO - GVW 26,000 lb									
2007 4 Wheel Disc 9,500 lb	Fd	Meritor		7636 - D769	MD769	-	R4011729	-	-
4 Wheel Disc 17,500 lb	Rd	Meritor		7636 - D769	MD769	-	R4011729	-	-
2006 4 Wheel Disc 9,500 lb	Fd	Meritor		7636 - D769	MD769	-	R4011729	-	-
4 Wheel Disc 17,500 lb	Rd	Meritor		7636 - D769	MD769	-	R4011729	-	-
2005 4 Wheel Disc 9,500 lb	Fd	Meritor		7636 - D769	MD769	-	R4011729	-	-
4 Wheel Disc 17,500 lb	Rd	Meritor		7636 - D769	MD769	-	R4011729	-	-
W20 - GVW 20,700 lb									
2007 4 Wheel Disc 7,500 lb	Fd	Bosch		7654 - D786	MD786A	R4011754	R404153343	-	-
4 Wheel Disc Standard Rear Axle 13,500 lb	Rd	Bosch		7654 - D786	MD786A	R4011754	R404153343	-	-
4 Wheel Disc Optional Rear Axle 14,500 lb	Rd	Bosch		7654 - D786	MD786A	R4011754	R404153343	-	-
2006 4 Wheel Disc 7,500 lb	Fd	Bosch		7654 - D786	MD786A	R4011754	R404153343	-	-
4 Wheel Disc Standard Rear Axle 13,500 lb	Rd	Bosch		7654 - D786	MD786A	R4011754	R404153343	-	-
4 Wheel Disc Optional Rear Axle 14,500 lb	Rd	Bosch		7654 - D786	MD786A	R4011754	R404153343	-	-
2005 4 Wheel Disc 7,500 lb	Fd	Bosch		7654 - D786	MD786A	R4011754	R404153343	-	-
4 Wheel Disc Standard Rear Axle 13,500 lb	Rd	Bosch		7654 - D786	MD786A	R4011754	R404153343	-	-
4 Wheel Disc Optional Rear Axle 14,500 lb	Rd	Bosch		7654 - D786	MD786A	R4011754	R404153343	-	-
W22 - GVW 22,000 lb									
2007 4 Wheel Disc Standard Front Axle 8,000 lb	Fd	Bosch		7654 - D786	MD786A	R4011754	R404153343	-	-
4 Wheel Disc Optional Front Axle 8,500 lb	Fd	Bosch		7654 - D786	MD786A	R4011754	R404153343	-	-
4 Wheel Disc Standard Rear Axle 14,500 lb	Rd	Bosch		7654 - D786	MD786A	R4011754	R404153343	-	-
4 Wheel Disc Optional Rear Axle 15,000 lb	Rd	Bosch		7654 - D786	MD786A	R4011754	R404153343	-	-
2006 4 Wheel Disc Standard Front Axle 8,000 lb	Fd	Bosch		7654 - D786	MD786A	R4011754	R404153343	-	-

266 - 10 Stud, Hat Shaped

381 - Rotor and Hub One Piece Assembly W/O ABS Ring

387 - 10 Hole Rotor

MERITOR DRUM OR ROTOR NO.	CALIPER OR CYLINDER BORE SIZE	MERITOR CALIPER OR WHEEL CYLINDER (LEFT)	MERITOR CALIPER OR WHEEL CYLINDER (RIGHT)	MERITOR CALIPER OR WHEEL CYLINDER REPAIR KIT	MERITOR CALIPER PISTON	MERITOR MASTER CYLINDER	MERITOR MASTER CYLINDER KIT	MERITOR BRAKE HOSE (LEFT)	MERITOR BRAKE HOSE (RIGHT)
WORKHORSE(Cont.)									
CUSTOM CHASSIS FRONT DISC REAR DRUM(Cont.)									
R44141186[381]	80mm	R42R55382	R42R55381	-	-	R4112029	-	-	-
-		-	-	-	-	-	-	-	-
UFO - GVW 26,000 lb									
-	70mm	60450483	60450482	R4011730	60050334	-	-	-	-
-	70mm	60450483	60450482	R4011730	60050334	-	-	-	-
-	70mm	60450483	60450482	R4011730	60050334	-	-	-	-
-	70mm	60450483	60450482	R4011730	60050334	-	-	-	-
-	70mm	60450483	60450482	R4011730	60050334	-	-	-	-
-	70mm	60450483	60450482	R4011730	60050334	-	-	-	-
W20 - GVW 20,700 lb									
23-123550-004[387]	66mm	R4255849	R4255849	R4011752	R4011751	-	-	-	-
23-123552-004[266]	66mm	R4255849	R4255849	R4011752	R4011751	-	-	-	-
23-123552-004[266]	66mm	R4255849	R4255849	R4011752	R4011751	-	-	-	-
23-123550-004[387]	66mm	R4255849	R4255849	R4011752	R4011751	-	-	-	-
23-123552-004[266]	66mm	R4255849	R4255849	R4011752	R4011751	-	-	-	-
23-123552-004[266]	66mm	R4255849	R4255849	R4011752	R4011751	-	-	-	-
23-123550-004[387]	66mm	R4255849	R4255849	R4011752	R4011751	-	-	-	-
23-123552-004[266]	66mm	R4255849	R4255849	R4011752	R4011751	-	-	-	-
23-123552-004[266]	66mm	R4255849	R4255849	R4011752	R4011751	-	-	-	-
W22 - GVW 22,000 lb									
23-123550-004[387]	66mm	R4255849	R4255849	R4011752	R4011751	-	-	-	-
23-123550-004[387]	66mm	R4255849	R4255849	R4011752	R4011751	-	-	-	-
23-123552-004[266]	66mm	R4255849	R4255849	R4011752	R4011751	-	-	-	-
23-123552-004[266]	66mm	R4255849	R4255849	R4011752	R4011751	-	-	-	-
23-123550-004[387]	66mm	R4255849	R4255849	R4011752	R4011751	-	-	-	-

MAKE MODEL YEAR AXLE CODE AXLE WEIGHT	AXLE & BRK. TYPE	BRK. MFG.	BRAKE SIZE	FMSI	MERITOR DISC PAD OR BRAKE SHOE	MERITOR GUIDE PIN OR RETURN SPRING KIT	MERITOR CALIPER HWD. KIT OR RETURN SPRING KIT	MERITOR ADJUSTER KIT (LEFT WHEEL)	MERITOR ADJUSTER KIT (RIGHT WHEEL)
WORKHORSE(Cont.)									
W22 - GVW 22,000 lb(Cont.)									
2006 4 Wheel Disc Optional Front Axle 8,500 lb	Fd	Bosch		7654 - D786	MD786A	R4011754	R404153343	-	-
4 Wheel Disc Standard Rear Axle 14,500 lb	Rd	Bosch		7654 - D786	MD786A	R4011754	R404153343	-	-
4 Wheel Disc Optional Rear Axle 15,000 lb	Rd	Bosch		7654 - D786	MD786A	R4011754	R404153343	-	-
2005 4 Wheel Disc Standard Front Axle 8,000 lb	Fd	Bosch		7654 - D786	MD786A	R4011754	R404153343	-	-
4 Wheel Disc Optional Front Axle 8,500 lb	Fd	Bosch		7654 - D786	MD786A	R4011754	R404153343	-	-
4 Wheel Disc Standard Rear Axle 14,500 lb	Rd	Bosch		7654 - D786	MD786A	R4011754	R404153343	-	-
4 Wheel Disc Optional Rear Axle 15,000 lb	Rd	Bosch		7654 - D786	MD786A	R4011754	R404153343	-	-
W24 - GVW 24000 lb									
2007 4 Wheel Disc 9,000 lb	Fd	Meritor		7636 - D769	MD769	-	R4011729	-	-
4 Wheel Disc 15,500 lb	Rd	Meritor		7636 - D769	MD769	-	R4011729	-	-
2006 4 Wheel Disc 9,000 lb	Fd	Meritor		7636 - D769	MD769	-	R4011729	-	-
4 Wheel Disc 15,500 lb	Rd	Meritor		7636 - D769	MD769	-	R4011729	-	-
2005 4 Wheel Disc 9,000 lb	Fd	Meritor		7636 - D769	MD769	-	R4011729	-	-
4 Wheel Disc 15,500 lb	Rd	Meritor		7636 - D769	MD769	-	R4011729	-	-
W25.5 - GVW 25,500 lb									
2007 4 Wheel Disc 9,000 lb	Fd	Meritor		7636 - D769	MD769	-	R4011729	-	-
4 Wheel Disc 16,500 lb	Rd	Meritor		7636 - D769	MD769	-	R4011729	-	-
2006 4 Wheel Disc 9,000 lb	Fd	Meritor		7636 - D769	MD769	-	R4011729	-	-
4 Wheel Disc 16,500 lb	Rd	Meritor		7636 - D769	MD769	-	R4011729	-	-
2005 4 Wheel Disc 9,000 lb	Fd	Meritor		7636 - D769	MD769	-	R4011729	-	-
4 Wheel Disc 16,500 lb	Rd	Meritor		7636 - D769	MD769	-	R4011729	-	-
W62 - DIESEL - GVW 19,500 lb									
2007 4 Wheel Disc 9,000 lb	Fd	Meritor		7636 - D769	MD769	-	R4011729	-	-
4 Wheel Disc 13,000 lb	Rd	Meritor		7636 - D769	MD769	-	R4011729	-	-
2006 4 Wheel Disc 9,000 lb	Fd	Meritor		7636 - D769	MD769	-	R4011729	-	-

266 - 10 Stud, Hat Shaped

387 - 10 Hole Rotor

MERITOR DRUM OR ROTOR NO.	CALIPER OR CYLINDER BORE SIZE	MERITOR CALIPER OR WHEEL CYLINDER (LEFT)	MERITOR CALIPER OR WHEEL CYLINDER (RIGHT)	MERITOR CALIPER OR WHEEL CYLINDER REPAIR KIT	MERITOR CALIPER PISTON	MERITOR MASTER CYLINDER	MERITOR MASTER CYLINDER KIT	MERITOR BRAKE HOSE (LEFT)	MERITOR BRAKE HOSE (RIGHT)
WORKHORSE(Cont.)									
W22 - GVW 22,000 lb(Cont.)									
23-123550-004[387]	66mm	R4255849	R4255849	R4011752	R4011751	-	-	-	-
23-123552-004[266]	66mm	R4255849	R4255849	R4011752	R4011751	-	-	-	-
23-123552-004[266]	66mm	R4255849	R4255849	R4011752	R4011751	-	-	-	-
23-123550-004[387]	66mm	R4255849	R4255849	R4011752	R4011751	-	-	-	-
23-123550-004[387]	66mm	R4255849	R4255849	R4011752	R4011751	-	-	-	-
23-123552-004[266]	66mm	R4255849	R4255849	R4011752	R4011751	-	-	-	-
23-123552-004[266]	66mm	R4255849	R4255849	R4011752	R4011751	-	-	-	-
W24 - GVW 24000 lb									
-	70mm	60450483	60450482	R4011730	60050334	-	-	-	-
-	70mm	60450483	60450482	R4011730	60050334	-	-	-	-
-	70mm	60450483	60450482	R4011730	60050334	-	-	-	-
-	70mm	60450483	60450482	R4011730	60050334	-	-	-	-
-	70mm	60450483	60450482	R4011730	60050334	-	-	-	-
-	70mm	60450483	60450482	R4011730	60050334	-	-	-	-
W25.5 - GVW 25,500 lb									
-	70mm	60450483	60450482	R4011730	60050334	-	-	-	-
-	70mm	60450483	60450482	R4011730	60050334	-	-	-	-
-	70mm	60450483	60450482	R4011730	60050334	-	-	-	-
-	70mm	60450483	60450482	R4011730	60050334	-	-	-	-
-	70mm	60450483	60450482	R4011730	60050334	-	-	-	-
-	70mm	60450483	60450482	R4011730	60050334	-	-	-	-
W62 – DIESEL - GVW 19,500 lb									
-	64mm	60450481	60450480	R4011731	R4011511	-	-	-	-
-	64mm	60450481	60450480	R4011731	R4011511	-	-	-	-
-	64mm	60450481	60450480	R4011731	R4011511	-	-	-	-

MAKE MODEL YEAR AXLE CODE AXLE WEIGHT	AXLE & BRK. TYPE	BRK. MFG.	BRAKE SIZE	FMSI	MERITOR DISC PAD OR BRAKE SHOE	MERITOR GUIDE PIN OR RETURN SPRING KIT	MERITOR CALIPER HWD. KIT OR RETURN SPRING KIT	MERITOR ADJUSTER KIT (LEFT WHEEL)	MERITOR ADJUSTER KIT (RIGHT WHEEL)
WORKHORSE(Cont.)									
W62 - DIESEL - GVW 19,500 lb(Cont.)									
2006 4 Wheel Disc 13,000 lb	Rd	Meritor		7636 - D769	MD769	-	R4011729	-	-
2005 4 Wheel Disc 9,000 lb	Fd	Meritor		7636 - D769	MD769	-	R4011729	-	-
4 Wheel Disc 13,000 lb	Rd	Meritor		7636 - D769	MD769	-	R4011729	-	-
W62 - DIESEL - GVW 23,500 lb									
2007 4 Wheel Disc 9,000 lb	Fd	Meritor		7636 - D769	MD769	-	R4011729	-	-
4 Wheel Disc 15,500 lb	Rd	Meritor		7636 - D769	MD769	-	R4011729	-	-
2006 4 Wheel Disc 9,000 lb	Fd	Meritor		7636 - D769	MD769	-	R4011729	-	-
4 Wheel Disc 15,500 lb	Rd	Meritor		7636 - D769	MD769	-	R4011729	-	-
2005 4 Wheel Disc 9,000 lb	Fd	Meritor		7636 - D769	MD769	-	R4011729	-	-
4 Wheel Disc 15,500 lb	Rd	Meritor		7636 - D769	MD769	-	R4011729	-	-
W62 - GAS - GVW 19,500 lb									
2007 4 Wheel Disc 9,000 lb	Fd	Meritor		7636 - D769	MD769	-	R4011729	-	-
4 Wheel Disc 13,000 lb	Rd	Meritor		7636 - D769	MD769	-	R4011729	-	-
2006 4 Wheel Disc 9,000 lb	Fd	Meritor		7636 - D769	MD769	-	R4011729	-	-
4 Wheel Disc 13,000 lb	Rd	Meritor		7636 - D769	MD769	-	R4011729	-	-
2005 4 Wheel Disc 9,000 lb	Fd	Meritor		7636 - D769	MD769	-	R4011729	-	-
4 Wheel Disc 13,000 lb	Rd	Meritor		7636 - D769	MD769	-	R4011729	-	-
W62 - GAS - GVW 23,500 lb									
2007 4 Wheel Disc 9,000 lb	Fd	Meritor		7636 - D769	MD769	-	R4011729	-	-
4 Wheel Disc 15,500 lb	Rd	Meritor		7636 - D769	MD769	-	R4011729	-	-
2006 4 Wheel Disc 9,000 lb	Fd	Meritor		7636 - D769	MD769	-	R4011729	-	-
4 Wheel Disc 15,500 lb	Rd	Meritor		7636 - D769	MD769	-	R4011729	-	-
2005 4 Wheel Disc 9,000 lb	Fd	Meritor		7636 - D769	MD769	-	R4011729	-	-
4 Wheel Disc 15,500 lb	Rd	Meritor		7636 - D769	MD769	-	R4011729	-	-

MERITOR DRUM OR ROTOR NO.	CALIPER OR CYLINDER BORE SIZE	MERITOR CALIPER OR WHEEL CYLINDER (LEFT)	MERITOR CALIPER OR WHEEL CYLINDER (RIGHT)	MERITOR CALIPER OR WHEEL CYLINDER REPAIR KIT	MERITOR CALIPER PISTON	MERITOR MASTER CYLINDER	MERITOR MASTER CYLINDER KIT	MERITOR BRAKE HOSE (LEFT)	MERITOR BRAKE HOSE (RIGHT)
WORKHORSE(Cont.)									
W62 – DIESEL - GVW 19,500 lb(Cont.)									
-	64mm	60450481	60450480	R4011731	R4011511	-	-	-	-
-	64mm	60450481	60450480	R4011731	R4011511	-	-	-	-
-	64mm	60450481	60450480	R4011731	R4011511	-	-	-	-
W62 - DIESEL - GVW 23,500 lb									
-	70mm	60450483	60450482	R4011730	60050334	-	-	-	-
-	70mm	60450483	60450482	R4011730	60050334	-	-	-	-
-	70mm	60450483	60450482	R4011730	60050334	-	-	-	-
-	70mm	60450483	60450482	R4011730	60050334	-	-	-	-
-	70mm	60450483	60450482	R4011730	60050334	-	-	-	-
-	70mm	60450483	60450482	R4011730	60050334	-	-	-	-
W62 - GAS - GVW 19,500 lb									
-	64mm	60450481	60450480	R4011731	R4011511	-	-	-	-
-	64mm	60450481	60450480	R4011731	R4011511	-	-	-	-
-	64mm	60450481	60450480	R4011731	R4011511	-	-	-	-
-	64mm	60450481	60450480	R4011731	R4011511	-	-	-	-
-	64mm	60450481	60450480	R4011731	R4011511	-	-	-	-
-	64mm	60450481	60450480	R4011731	R4011511	-	-	-	-
W62 - GAS - GVW 23,500 lb									
-	70mm	60450483	60450482	R4011730	60050334	-	-	-	-
-	70mm	60450483	60450482	R4011730	60050334	-	-	-	-
-	70mm	60450483	60450482	R4011730	60050334	-	-	-	-
-	70mm	60450483	60450482	R4011730	60050334	-	-	-	-
-	70mm	60450483	60450482	R4011730	60050334	-	-	-	-
-	70mm	60450483	60450482	R4011730	60050334	-	-	-	-

MERITOR®
an ArvinMeritor™ brand

MERITOR WABCO

Hydraulic ABS (H-ABS) & Hydraulic Power Brake (HPB)

Section 2

MERITOR WABCO HYDRAULICS ABS (H-ABS)

Overview

Meritor WABCO Hydraulic Anti-lock Braking System (ABS) is an electronic wheel speed monitoring and control system used on medium-duty trucks, buses and motor home chassis equipped with a hydraulic brake system.

How Hydraulic ABS Works

ABS wheel sensors detect wheel speeds. The sensors generate signals that are transmitted to an Electronic Control Unit (ECU). If the wheels start to lock, the ECU signals the modulator assembly, a control valve assembly, to regulate the brake pressure of each locking wheel.

During an ABS stop, a solenoid valve in the modulator assembly is rapidly pulsed; that is, it opens and closes several times to control the brake pressure. When this occurs, drivers may notice a pulsating of the brake pedal.

An ABS indicator lamp on the vehicle dash alerts the driver to a possible system fault and provides blink code information to diagnose the system.

NOTE:
If the ABS indicator lamp comes on during normal vehicle operation, drivers may complete their trip, but are instructed to have their vehicles serviced as soon as possible.

In the unlikely event of an ABS system malfunction, the ABS in the affected wheel will be disabled and will return to normal braking. The other sensed wheels will retain their ABS function.

System Layout

A typical Meritor WABCO D version Hydraulic ABS system with a Cab-Mounted ECU is illustrated below.

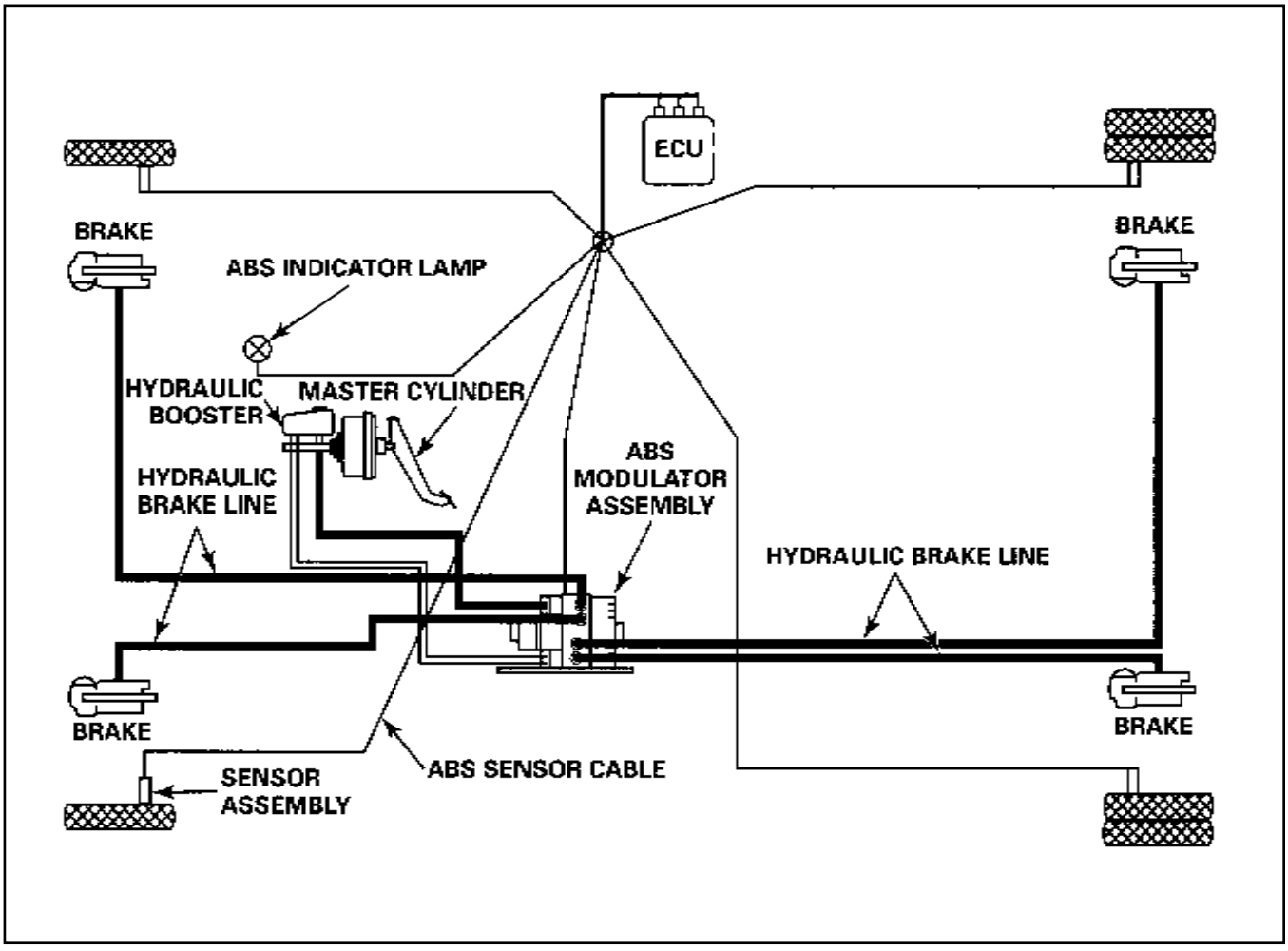

H-ABS SYSTEM COMPONENTS

ELECTRONIC CONTROL UNITS (ECU)

C VERSION HABS CAB MOUNTED	NEW PART NO.	SERVICE EXCHANGE NO.	CORE GROUP	CORE NO.
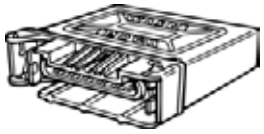 12-Volt 4S/4M	**S446 044 047 0**	S446 044 047 7	ECU451	XC3100
	S446 044 061 0	S446 044 061 7	ECU451	XC3101
	S446 044 062 0	S446 044 062 7	ECU451	XC3102
D VERSION ECUS	**PART NUMBER**	**SERVICE EXCHANGE NO.**	**CORE GROUP**	**CORE NO.**
. 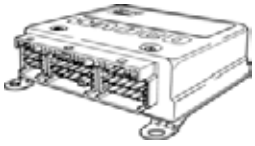 CAB Mounted ECU 12-Volt 4S/4M	**S446 044 085 0**	S446 044 085 0	ECU452	XC3103
	S446 044 086 0	S446 044 086 0	ECU452	XC3104

D VERSION ECUS	PART NUMBER	SERVICE EXCHANGE NO.	CORE GROUP	CORE NO.
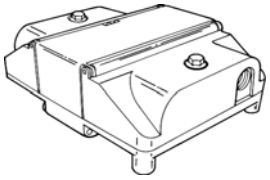 Frame Mounted ECU • 12-Volt • 4S/4M	**S446 109 010 0**	S446 109 010 7	ECU453	XC3106

H-ABS SYSTEM COMPONENTS

MODULATOR ASSEMBLIES

- C Version Hydraulic ABS
- D Version Hydraulic ABS

OEM modulator assemblies are sold with dry modulator valves. For aftermarket, Meritor WABCO sells only wet modulator valves (valves pre-filled with brake fluid). To help you identify the proper replacement parts, we have included the OEM part numbers. OEM Dry modulator valve assemblies are listed WITHOUT the S suffix.

NOTE: If the number of the valve you are replacing is for a dry valve, the ArvinMeritor customer service representative will provide the correct WET valve in its place.

C VERSION HABS MODULATOR VALVE	REPLACEMENT PARTS			
	MODULATOR ASSY.	**MODULATOR**	**BRACKET**	**REMARKS**
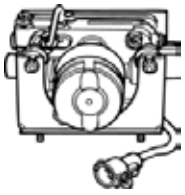	**S478 407 011 0**	N/A	N/A	Valve includes bracket
	S478 407 012 0	N/A	N/A	Valve includes bracket
	—	—	**S478 407 353 2**	

D VERSION HABS MODULATOR VALVE	REPLACEMENT PARTS			
	MODULATOR ASSY.	**MODULATOR**	**BRACKET**	**REMARKS**
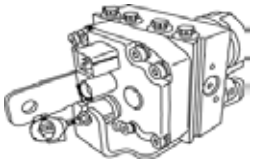	**478 407 014 0**	**S478 407 056 0**	**S478 407 356 4**	For aftermarket repl. assy. order part no. S478 407 015 0
	S478 407 015 0	**S478 407 056 0**	**S478 407 356 4**	
	478 407 016 0	**S478 407 056 0**	**S478 407 358 4** **S478 407 357 4**	Two brackets used in this assembly.
	S478 407 018 0	**S478 407 060 0**	**S478 901 352 4**	
	S478 407 019 0	---------->	---------->	Replaced by S478 407 062 0
	S478 407 027 0	**S478 407 058 0**	**S478 407 056 4**	
	S478 407 028 0	---------->	---------->	Replaced by S478 407 062 0
	478 407 033 0	**S478 407 060 0**	**S478 901 352 4**	For aftermarket repl. assy. order part no. S478 407 018 0
	478 407 061 0	**S478 407 058 0**	**S478 407 055 2**	For aftermarket repl. assy. order part no. S478 407 062 0
	S478 407 062 0	**S478 407 058 0**	**S478 407 055 2**	

HYDRAULIC POWER BRAKE (HPB) COMPONENTS

Overview

Meritor WABCO's Hydraulic Power Brake (HPB) is a braking and vehicle control system for Business Class trucks, Classes 4 through 7, and buses that are equipped with hydraulic brakes. The HPB system provides the following functions.

- Full power brake performance
- Brake control functions including Anti-Lock Braking System (ABS), Automatic Traction Control (ATC) and Electronic Brake force Distribution (EBD)
- Optional parking brake control

System Components

The HPB system consists of two main components — the Hydraulic Compact Unit (HCU) and a dual circuit master cylinder. The HPB system is also available with an optional parking brake pressure supply valve. Figure 1.1, Figure 1.2 and Figure 1.3.

HCU WITHOUT OPTIONAL POWER PARKING BRAKE SUPPLY VALVE

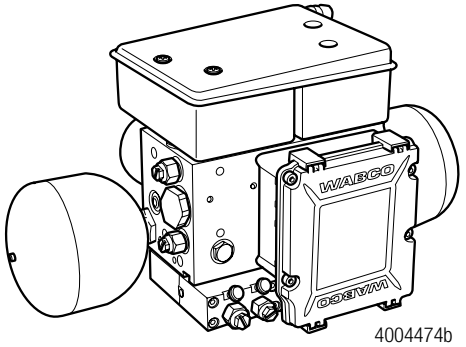

Figure 1.1

HCU WITH OPTIONAL POWER PARKING BRAKE PRESSURE SUPPLY VALVE

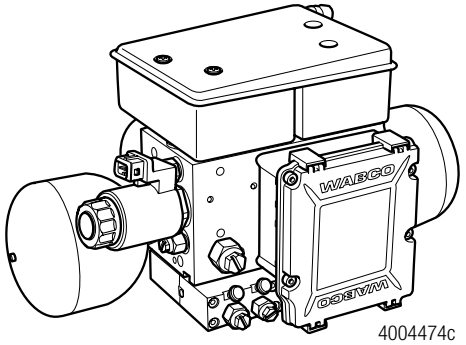

Figure 1.2

MASTER CYLINDER ASSEMBLY

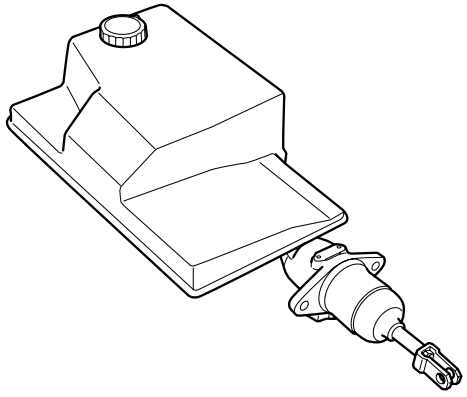

Figure 1.3

Hydraulic Compact Unit

The HCU consists of an electronic control unit, two independent electric motors driving two pump systems, two accumulators, a dual circuit fluid reservoir with integrated filters, pressure relief valves, solenoid valves and a dual circuit relay valve. The HCU is mounted to the vehicle frame rail with two brackets. Figure 1.4.

- Two pump motors draw brake fluid from the reservoir to pressurize the accumulators. The motors are not serviceable.
- Two gas-filled hydraulic accumulators store energy supplied by the pumps. Accumulators are sealed at the factory and are non-refillable. Accumulators may be replaced without replacing the entire HCU.
- The ECU processes sensor signals and generates solenoid valve commands to reduce, maintain or increase brake pressure for control function. The ECU constantly monitors the pressure in the accumulators, using one pressure sensor per brake circuit. The ECU may be replaced without replacing the complete HCU.
- The optional pressure supply valve controls the Spring-Applied/ Hydraulic Released (SAHR) parking brake. The pressure supply valve is mounted on the HCU behind the accumulator. The pressure supply valve may be replaced without replacing the entire HCU.
- The dual circuit HCU reservoir holds the hydraulic brake fluid. The reservoir may be replaced without replacing the entire HCU.

HYDRAULIC POWER BRAKE (HPB) COMPONENTS

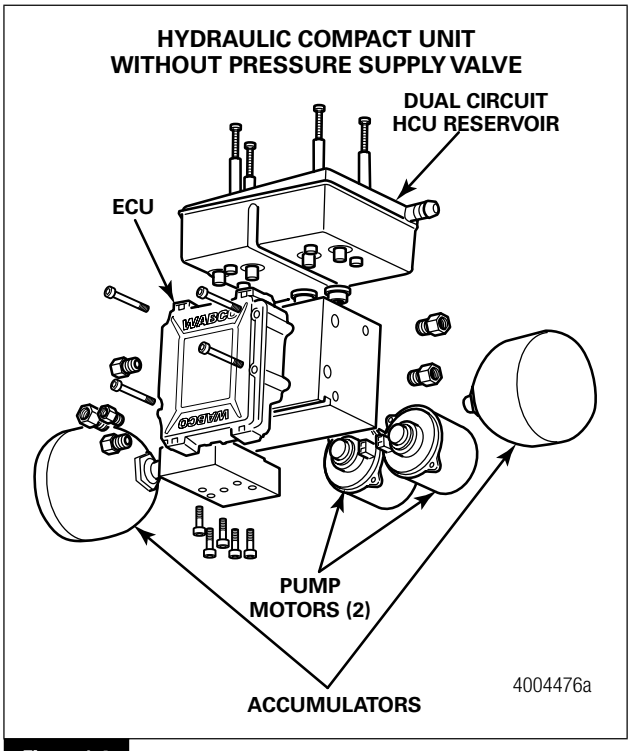

Figure 1.4

Master Cylinder Assembly

The dual circuit master cylinder with an integrated relay valve provides the translation of brake pedal force into hydraulic braking pressure, and sends the driver's demand signal to the HCU. Figure 1.5.

- The foot brake switch provides brake status to the ECU and eliminates the need for a brake light switch.
- The master cylinder reservoir holds the hydraulic brake fluid.
- The fluid sensor switch monitors fluid level in the master cylinder reservoir.
- The master cylinder reservoir and both switches may be replaced without replacing the entire master cylinder.
- The master cylinder cap provided by Meritor WABCO contains a special gore material that allows the reservoir to breathe, and serves as a filter to help prevent contaminants from getting into the reservoir. This is the only cap approved for use with Meritor WABCO HPB. Replacement caps may be obtained from Meritor WABCO.

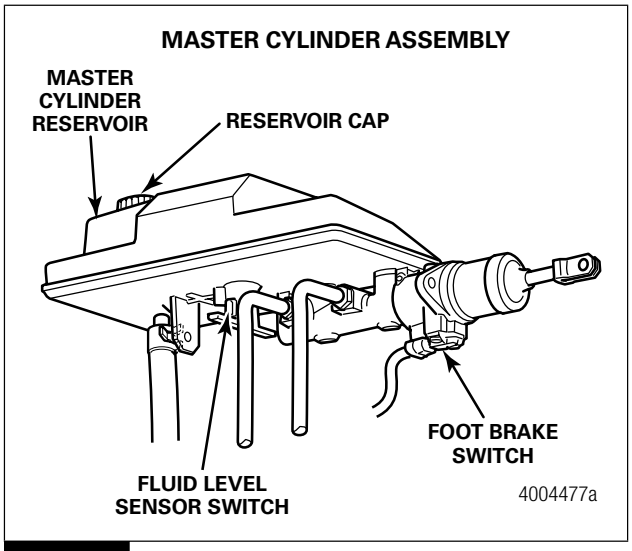

Figure 1.5

Wheel-End Sensors

A Meritor WABCO wheel-end sensor is installed at each wheel whose speed is to be monitored. These sensors generate electronic signals which are sent to the ECU. A sensor spring clip holds the wheel speed sensor in place. Figure 1.6. The sensor and sensor clip must be lubricated before installation and whenever wheel-end maintenance is performed.

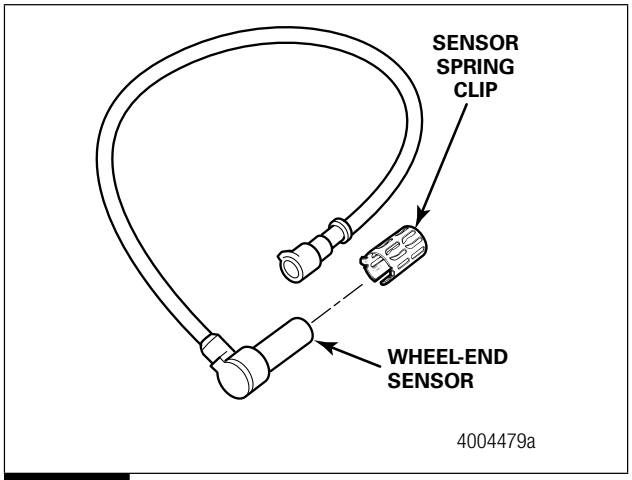

Figure 1.6

HYDRAULIC POWER BRAKE (HPB) COMPONENTS

TOOLBOX™ Software

TOOLBOX™ Software is a PC-based diagnostics program required to diagnose HPB system faults. For HPB, version 5.0 or higher is required. The program runs in Windows® 98 or higher. TOOLBOX™ is available from SPX Service Solutions, 1-800-328-6657. Figure 1.7.

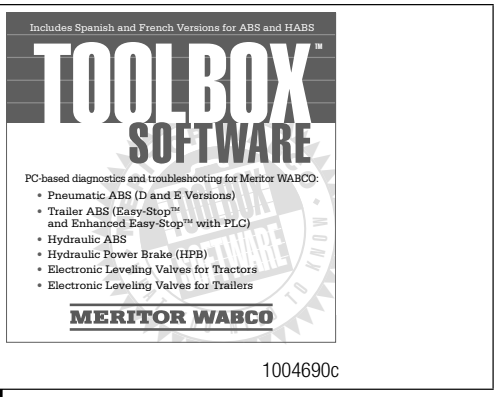

Figure 1.7

Low Pressure Hose

This manual contains service information for a low pressure hose which is not produced by Meritor WABCO but is an integral part of the HPB system.

How the HPB System Works

Meritor WABCO's hydraulic power braking system provides the energy required to actuate the brakes and control the electronic brake force distribution (EBD), ABS and ATC functions. The HCU is activated each time the ignition is turned on or whenever the driver steps on the brake pedal. If the system is equipped with the optional power park brake, the HCU also supplies the energy to release and control the service and park brakes.

The Meritor WABCO HPB system for trucks is illustrated in Figure 1.8. A complete HPB system layout, with hydraulic brake lines, appears in the Appendix.

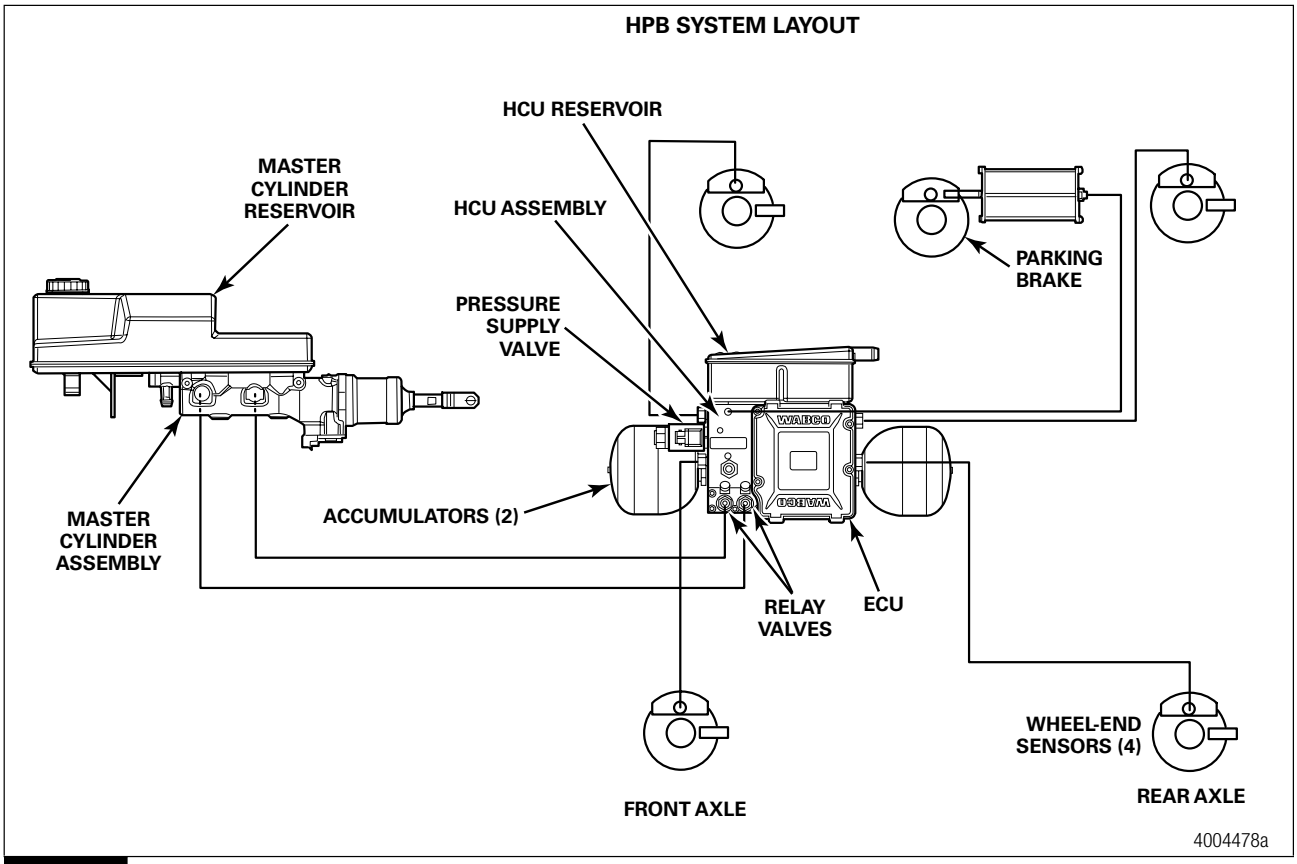

Figure 1.8

HYDRAULIC POWER BRAKE (HPB) COMPONENTS

HYDRAULIC COMPACT UNIT (HCU) ASSEMBLY - WITH ECU
S478 407 924 2 (NEW) S478 407 991 7 (Service Exchange)

HYDRAULIC COMPACT UNIT (HCU) ASSEMBLY - WITHOUT ECU
S478 407 933 2 (NEW) S478 407 992 7 (Service Exchange)

- Replacement parts include the HCU assembly, ECU, reservoir, accumulators, pressure supply valve, parking brake switch, relay valve, and appropriate hardware kits. SAHR is not distributed by Meritor WABCO, please contact the OEM for product details.

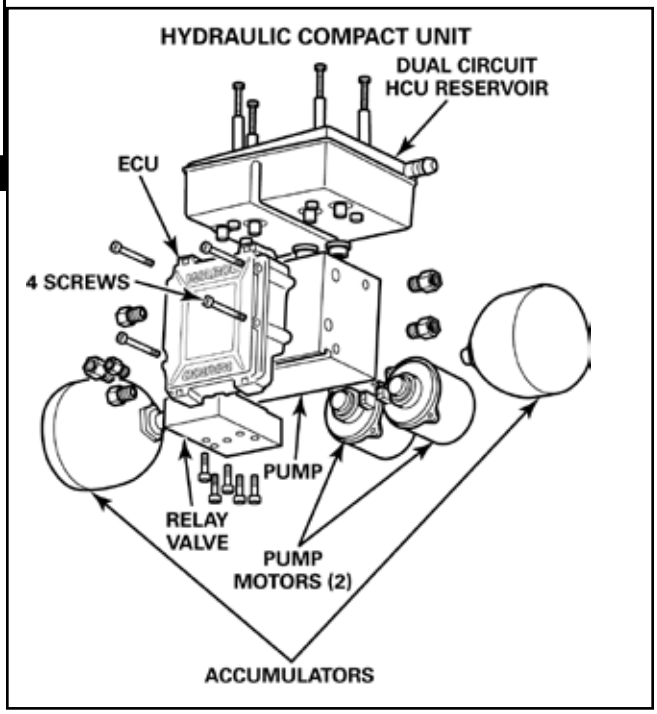

ECU and reservoir may be purchased individually.
Mounting bracket is not included with the replacement assembly.

	Components
HCU	**S478 407 122 0**
Electronic Control Unit	**S446 046 009 2**
HCU Reservoir	**S451 900 523 2**
HCU Bracket (front)	**S478 901 052 2**
HCU Bracket (rear)	**S478 901 053 2**
Accumulator	**S458 501 026 1**
Reservoir	**S451 900 523 2**
Relay Valve	**S478 407 930 2** (no ATC) or
Relay Valve	**S478 407 929 2** (with ATC)
Pump	**S478 905 152 2**

ELECTRONIC CONTROL UNIT (ECU) REPLACEMENT KITS

	NEW PART NO.	SERVICE EXCHANGE NO.	DESCRIPTION	CORE GROUP	CORE NO.
ECU Replacement Kit 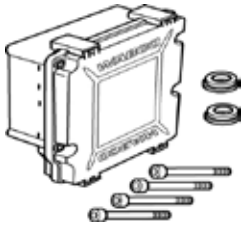	**S446 046 920 2**	S446 046 990 7	ECU replacement kit , ABS with ATC ECU replacement kit, ABS only Kits contains ECU, 2 pressure sensor seals and 4 screws Services 446 046 009 2	ECU455	XC3123
ECU Hardware Kit 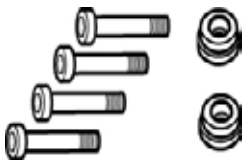	**S446 046 921 2**		Kit contains two pressure seals and four screws. Services 446 046 009 2		

HYDRAULIC POWER BRAKE (HPB) COMPONENTS

HCU RESERVOIR REPLACEMENT KITS

	PART NO.	APPLICATION INFORMATION	REMARKS
HCU Reservoir Replacement Kit 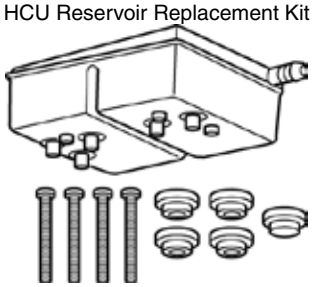	**S451 900 922 2**	Kit contains HCU reservoir, four screws, reservoir plug and four rubber grommets.	Services 451 900 531 2
Rubber Grommet Kit	**S451 900 923 2**	Kit contains four rubber grommets.	

ACCUMULATOR REPLACEMENT KITS

	PART NO.	APPLICATION INFORMATION	REMARKS
Accumulator Replacement Kit	**S458 501 924 2**	Kit contains two accumulators labeled with warning statement and two O-rings.	Services 458 501 019 2
Accumulator O-ring Kit	**S458 501 923 2**	Kit contains two O-rings.	

PRESSURE SUPPLY VALVE REPLACEMENT KITS

	PART NO.	APPLICATION INFORMATION
Pressure Supply Valve Replacement Kit 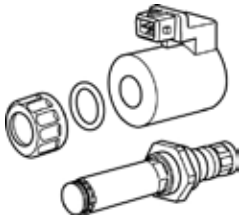	**S476 901 920 2**	Kit includes solenoid valve with coil, O-ring and nut.
Coil Kit for Pressure Supply Valve 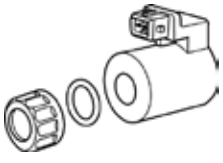	**S472 879 920 2**	Kit contains coil, nut and O-ring.

HYDRAULIC POWER BRAKE (HPB) COMPONENTS

PARKING BRAKE SWITCH
REPLACEMENT KITS – Mounted on the cab, not on the HCU

	PART NO.	APPLICATION INFORMATION
Parking Brake Switch Replacement Kit	**S446 280 012 0**	Kit contains switch with attached mounting plate, mounting screws.
Parking Brake - Dash Knob	**S446 280 790 4**	Not included in the parking brake switch replacement kit.

RELAY VALVE REPLACEMENT KITS

	PART NO.	APPLICATION INFORMATION
Relay Valve Replacement Kit 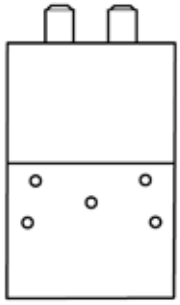	**S478 407 929 2**	With Automatic Traction Control (ATC). Kit contains a relay valve and a steel plate.
	S478 407 930 2	Without ATC. Kit contains a relay valve and a steel plate.

HYDRAULIC POWER BRAKE (HPB) COMPONENTS

PUMP REPLACEMENT KIT

Pump Replacement Kit	PART NO.	APPLICATION INFORMATION	REMARKS
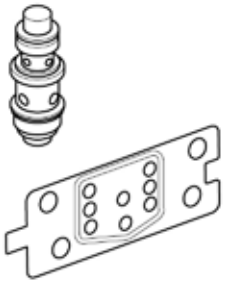	**S478 407 928 2**	Kit contains pump and seal plate.	Services 478 905 152 2

HCU ACCESSORIES

Relay Valve Bleeder Screw Kit	PART NO.	APPLICATION INFORMATION
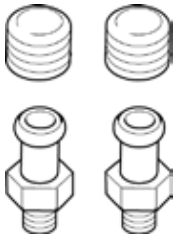	**S478 407 921 2**	Kit contains two relay valve bleeder screws and two protective caps.
HCU Hardware Mounting Kit 	**R950054**	Kit includes four bushings, and four 10 mm screws.
HCU Mounting Brackets 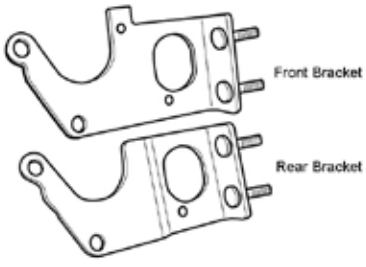	**S478 901 052 2** Front Mounting Bracket	Mounting hardware not included. Order Kit R950054 for mounting hardware.
	S478 901 053 2 Rear Mounting Bracket	

HYDRAULIC POWER BRAKE (HPB) COMPONENTS

MASTER CYLINDER ASSEMBLY

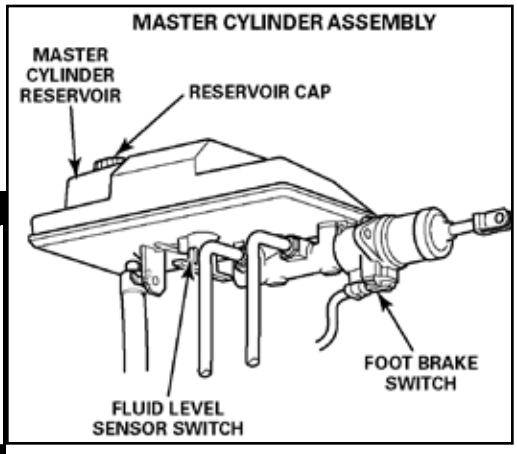

S468 411 005 0	Master cylinder with travel switch
S468 413 020 2	Master cylinder Reservoir with fluid level switch - Bus
S468 413 021 2	Master cylinder Reservoir with fluid level switch - Truck
S446 045 007 2	Master cylinder travel switch
S468 413 921 2	Master cylinder fluid level switch

MASTER CYLINDER ASSEMBLY REPLACEMENT KITS

	PART NO.	APPLICATION INFORMATION
Master Cylinder Replacement Kit 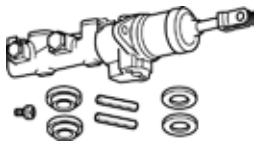	**R950056**	Kit contains master cylinder, travel switch and screw, 2 rubber grommets and washers, 2 roll pins.
Master Cylinder Reservoir Kit 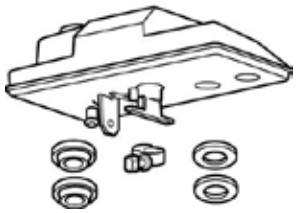	**R950055**	For bus application, kit contains master cylinder reservoir, fluid level switch, 2 rubber grommets and washers. Cap not included.
	R955421	For truck application, kit contains master cylinder reservoir, travel switch and screw, 2 rubber grommets and washers. Cap not included.
Master Cylinder Cap	**S451 900 474 2**	Fits all three master cylinder reservoirs.
Master Cylinder Bracket 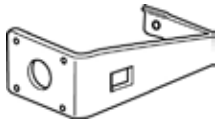	**S478 901 054 0**	For Bus Applications Use with master cylinders 468 411 005 0 & 468 413 020 2
	S478 901 057 2	For Medium Duty Truck Applications Use with master cylinder 468 413 021 2

HYDRAULIC POWER BRAKE (HPB) COMPONENTS

MASTER CYLINDER TRAVEL SWITCH REPLACEMENT KITS

	PART NO.	APPLICATION INFORMATION
Travel Switch Kit 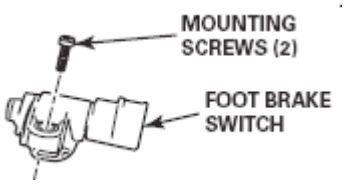	**S468 411 923 2**	Kit contains travel switch, gasket and 2 screws.
Fluid Level Switch 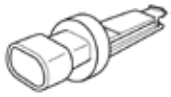	**S468 413 921 2**	Kit contains fluid level switch.
Roll Pin Kit	**R950057**	Kit contains two roll pins
Rubber Grommets Kit for Master Cylinder	**S451 900 924 2**	Kit contains two rubber grommets
Clevis Pin Kit for Master Cylinder	**S451 900 925 2**	Kit contains one master cylinder clevis pin.

H-ABS AND HPB COMPONENTS

SENSORS

- Installed at wheel ends to measure the motion of a sensed wheel
- Straight sensors are typically used in heavy front axle applications (16,000 - 20,000 GAWR)
- Right Angle (90° sensors are used in most other applications
- Sensor Extension Cables are available (see next page)

WHEEL SPEED SENSORS

All sensors include sensor with cable leads, spring clip and lubricant. Cable lead lengths are specified on the following page. Sensor part numbers shown as a reference only, orders as the appropriate sensor kit part number.

Sensor Kits:

- Sensor kits include sensor with cable leads, spring clip, lubricant and instruction sheet.
- When replacing a sensor you must also replace the spring clip.
- Sensor cable lead lengths are specified on the following page.
- Sensor extension cables are available.

Function: Installed at wheel ends to measure the motion of a sensed wheel in ABS applications.

Style: Meritor WABCO sensors are either straight or 90° pencil-type sensor. Straight sensors are typically used in heavy front axle applications (16,000 – 20,000 GAWR) 90° sensors are used in most other applications.

Straight Sensors

KIT NUMBER	SENSOR	CABLE LEAD	
		FEET	METERS
R955337	S441 032 444 0	5.8	1.7
R955338	S441 032 900 0	5.8	1.7

Right Angle (90˚) Sensors

KIT NUMBER	SENSOR	CABLE LEAD	
		FEET	METERS
R955432	S941 032 261 0	2.5	0.7
R955436	S941 032 262 0	2.8	0.86
R955434	S941 032 266 0	3.1	0.9
R955437	S941 032 265 0	3.2	0.99
R955438	S941 032 267 0	3.3	1.0
R955433	S941 032 264 0	3.5	1.07
R955439	S941 032 269 0	4.47	1.46
R955435	S941 032 268 0	4.6	1.4

H-ABS AND HPB COMPONENTS

SENSOR EXTENSION CABLES

CABLE	PART NO.	CABLE LENGTH		APPLICATION INFORMATION
		FEET	METERS	
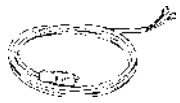 For use with Cab-Mounted ECUs	**S449 711 015 0**	4.9	1.5	
	S449 711 031 0	9.8	3.0	
	S449 711 050 0	16.4	5.0	
	S949 711 065 0	21.3	6.5	
	S449 711 080 0	26.4	8.0	
	S449 711 100 0	32.8	10.0	
	S449 711 120 0	39.4	12.0	
	S449 711 150 0	49.2	15.0	

FUNCTION: Connects the wheel end sensors to the ECU

STYLE: 2-Wire with connector

SENSOR SPRING CLIP

- Holds the steel speed sensor in close proximity to the tooth wheel

	KIT NUMBER	SENSOR	I.D.	O.D.	LENGTH	APPLICATION INFORMATION
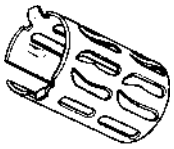	**R955459**	S899 760 510 4	0.63 IN. 16.0 MM	0.71 IN. 18.0 MM	1.18 IN. 30.0 MM	Sensor Clip - Copper
	R955458	S899 759 815 4				Sensor Clip - Chrome Nickel

TOOTH WHEEL

PART NUMBER	INNER DIAMETER	OUTER DIAMETER	NUMBER OF TEETH	COMMENTS
3237D1070	5.11	6.45	100	Before replacing a tooth wheel, contact either the OEM or the hub manufacturer to see if the wheel and hub are sold as one unit. Part numbers listed are for tooth wheels manufactured by ArvinMeritor.
3237Q1031	5.12	7.50	100	
3237R1032	5.43	7.68	100	
3237L1260	5.61	6.78	100	
3237G1047*	5.99	7.28	100	
3237W1097	5.99	7.28	100	
3237Y1195	6.30	7.76	100	
3237Q1239	6.42	7.95	100	
3237K1051	6.43	7.06	100	
3237V1192	6.44	7.56	100	
3237T1242	6.50	8.37	80	
3237H1256	6.51	7.30	100	
3237V1062	6.87	7.91	100	
3237P1056	7.79	8.62	100	

* 6 Holes, .21 hole size bolt circle 7.93

H-ABS AND HPB LITERATURE

HPB

Maintenance Manuals

- MM0401 Meritor WABCO Hydraulic Power Brake (HPB) System

Technical Bulletins

- TP-0672 HCU Relay Valve Replacement Procedure
- TP-0673 Hydraulic Compact Unit (HCU) Pump Replacement Procedure
- TP-0555 Leak Check Procedure for Meritor WABCO Hydraulic ABS and Hydraulic Power Brake (HPB) System
- TP-0438 Hydraulic Power Brake (HPB) Installation Instructions

Product Brochures

- TP-9795 Hydraulic ABS for Medium-Duty Trucks, Buses and Chassis *(not available in print)*
- SP-9927 HABS for Medium-Duty Trucks, Buses and Chassis

H-ABS

Maintenance Manuals

- MM0677 Hydraulic Anti-Lock Braking Systems (HABS) for Medium-Duty Trucks, Buses and Motor Home Chassis for E Version Hydraulic ABS
- MM0677FC Systèmes de freinage hydraulique ABS pour camions, autobus et autocaravanes Pour système de freinage hydraulique ABS Version E *(not available in print)*
- MM0677SP Sistemas de Frenos Antibloqueo Hidráulicos (HABS) para Camiones de Servicio Mediano, Autobuses y Chasis de Casas Rodantes Para Sistemas ABS Hidráulicos Versión E *(not available in print)*
- MM39 D-Version HABS for Medium-Duty Trucks, Buses and Motor Home Chassis
- MM39SP ABS hidráulico para chasis de camions de servicio mediano, autobuses y casas rodantes
- MM38 C-Version HABS for Medium Duty-Trucks, Buses and Motor Home Chassis

Technical Bulletins, Troubleshooting and Diagnostic Aids

- TP-0772 HABS Modulator Assembly Bracket Replacement Procedure Kit R955452
- TP-0555 Leak Check Procedure for Meritor WABCO Hydraulic ABS and Hydraulic Power Brake (HPB)

System

- TP-02102 Installation Instructions for Meritor WABCO Wheel Speed Sensor Replacement Kit
- TP-20192 Proper Sensor Adjustment for HABS
- TP-99124 HABS Installation Guide for OEMs and Body Builders (Includes Body Builder Installation Information)
- TP-99124SP Guía de instalación del sistema de frenos anti-bloqueo hidráulico (HABS) para OEMs y fabricantes de carrocerías (incluye información de instalación para fabricantes de carrocerías), ABS hidráulico version D
- SP-9916 Hydraulic ABS Driver Tips

Video

- T-0142V Hydraulic ABS for Medium-Duty Trucks, Buses and Motor Home Chassis

DIAGNOSTIC & TEST EQUIPMENT

TOOLBOX™ Software

TOOLBOX™ Software is a PC-based diagnostics program for use with D Version HABS. It is not compatible with C Version HABS. With this program the technician can display system faults and wheel speed data, test individual components, perform brake bleed procedures, verify installation wiring and more. TOOLBOX version 4.1 (or higher) runs in Windows® 95, 98, 2000, NT and Me. An RS232 to J1708 converter box or RS292 to PLC converter cable is required to run TOOLBOX.™ To order TOOLBOX™ Software, call SPX at 1-800-328-6657.

TOOLBOX version 7.0 or higher is recommended for HPB diagnostics.

Meritor WABCO Test Adaptor

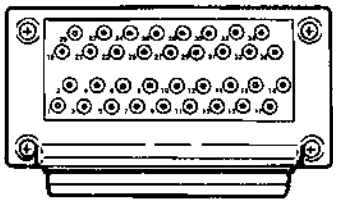

Part Number S446 300 314 0
The test adaptor helps technicians service and troubleshoot C-Version Meritor WABCO ABS. It is not compatible with D Version H-ABS or HPB.

NUMERICAL PARTS LISTING

Part Number	Page
3237D1070	2-15
3237G1047	2-15
3237H1256	2-15
3237K1051	2-15
3237L1260	2-15
3237P1056	2-15
3237Q1031	2-15
3237Q1239	2-15
3237R1032	2-15
3237T1242	2-15
3237V1062	2-15
3237V1192	2-15
3237W1097	2-15
3237Y1195	2-15
478 407 014 0	2-4
478 407 016 0	2-4
478 407 033 0	2-4
478 407 061 0	2-4
R950054	2-11
R950055	2-12
R950056	2-12
R950057	2-13
R955421	2-12
S446 044 047 0	2-3
S446 044 061 0	2-3
S446 044 062 0	2-3
S446 044 085 0	2-3
S446 044 086 0	2-3
S446 045 007 2	2-12
S446 046 009 2	2-8
S446 046 920 2	2-8
S446 046 921 2	2-8
S446 280 012 0	2-10
S446 280 790 4	2-10
S446 300 314 0	2-17
S449 711 015 0	2-15
S449 711 031 0	2-15

Part Number	Page
S449 711 050 0	2-15
S449 711 080 0	2-15
S449 711 100 0	2-15
S449 711 120 0	2-15
S449 711 150 0	2-15
S451 900 474 2	2-12
S451 900 523 2	2-8
S451 900 922 2	2-9
S451 900 923 2	2-9
S451 900 924 2	2-13
S451 900 925 2	2-13
S458 501 026 1	2-8
S458 501 923 2	2-9
S458 501 924 2	2-9
S468 411 005 0	2-12
S468 411 923 2	2-13
S468 413 020 2	2-12
S468 413 021 2	2-12
S468 413 921 2	2-12, 2-13
S472 879 920 2	2-9
S476 901 920 2	2-9
S478 407 011 0	2-4
S478 407 012 0	2-4
S478 407 015 0	2-4
S478 407 018 0	2-4
S478 407 019 0	2-4
S478 407 027 0	2-4
S478 407 028 0	2-4
S478 407 055 2	2-4
S478 407 056 0	2-4
S478 407 056 4	2-4
S478 407 058 0	2-4
S478 407 060 0	2-4
S478 407 062 0	2-4
S478 407 122 0	2-8
S478 407 353 2	2-4
S478 407 356 4	2-4

Part Number	Page
S478 407 357 4	2-4
S478 407 358 4	2-4
S478 407 921 2	2-11
S478 407 928 2	2-11
S478 407 929 2	2-8, 2-10
S478 407 930 2	2-8, 2-10
S478 901 052 2	2-8, 2-11
S478 901 053 2	2-8, 2-11
S478 901 054 0	2-12
S478 901 057 2	2-12
S478 901 352 4	2-4
S478 905 152 2	2-8
S949 711 065 0	2-15
TOOLBOX™	2-17
TOOTH WHEEL	2-15

XpresswayPlus.ArvinMeritor.com

Don't forget about using *XpresswayPlus* for:

- Ordering parts online
- Order status
- Price and availability
- Invoice Lookup
- Parts Catalog
- Reference Library
- The Company Store
- Literature
- Dealer/Distributor locator
- Online e-mail or phone numbers for Customer Service, Information Services, Marketing, Catalog, and eSupport

XpresswayPlus is easy to use, can reduce phone calls, and save you valuable time.

WHAT YOU NEED:	WHERE TO LOOK:
ACCOUNT CHANGE	CUSTOMER SERVICE
AFTERMARKET & PRODUCTION ASSEMBLIES	CATALOG
APPLICATION INFORMATION	CATALOG
BILL-OF-LADING NUMBER	ORDER STATUS
BILL-OF-MATERIAL	CATALOG
BULLETINS	REFERENCE LIBRARY
CONTACT NAMES & NUMBERS	CUSTOMER SERVICE
FIELD SUPPORT REPRESENTATIVES	CUSTOMER SERVICE
INVOICE (VIEW & PRINT)	ORDER STATUS
NEWSLETTER	REFERENCE LIBRARY
ORDER DETAILS	ORDER STATUS
ORDER HISTORY FILE	ORDER STATUS
ORDER MERCHANDISE	COMPANY STORE
ORDER SUBMIT	CREATE NEW ORDER
ORDER SUBMIT - STOCK UPLOAD (MULTIPLE LINES)	CREATE NEW ORDER
PART DETAILS	CATALOG
PART IMAGES	CATALOG
PART NUMBER COMPARISON	CATALOG
PARTS BOOKS	REFERENCE LIBRARY
PASSWORD CHANGE	CUSTOMER SERVICE
PRICE (LIST)	CATALOG
PRICE (NET) & AVAILABILITY	PRICE & AVAILABILITY
PRODUCT BROCHURES	REFERENCE LIBRARY
PRODUCT UPDATES	REFERENCE LIBRARY
PROOF-OF-DELIVERY	ORDER STATUS
REQUEST-FOR-QUOTATION (FOR MERITOR BRAND)	PRICE REQUEST
SALES LITERATURE	REFERENCE LIBRARY
SEND QUESTIONS, COMMENTS, ISSUES	CONTACT US
SHIPPER NUMBER	ORDER STATUS
TECH TIPS	REFERENCE LIBRARY
TRACKING NUMBER	ORDER STATUS
WARRANTY INFORMATION	REFERENCE LIBRARY
WHERE-USED INFORMATION	CATALOG

NOTES

MERITOR®
an ArvinMeritor™ brand

Domestic Disc Brake Assemblies & Exploded Views and Reference Charts

Section 3

TYPICAL TRUCK DISC BRAKE KIT

Meritor offers a full line of Hydraulic Disc Brake Hardware Kits for light- and medium-duty trucks and vans. For reference purposes, the illustrations below indicate the components found in a typical Meritor Disc Brake Kit.

Each Meritor Caliper Hardware Kit contains enough parts to service one axle.

Each Meritor Caliper Seal Kit contains enough parts to service one wheel.

CALIPER HARDWARE KITS

- **Helps restore caliper performance**
- **Adds service life to disc pads**
- **Assists in maintaining proper caliper alignment**

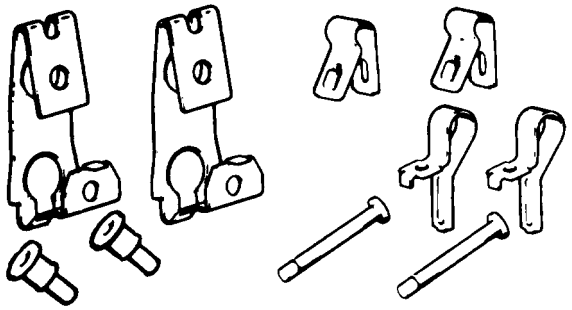

CALIPER SEAL KITS

- **Helps maintain piston floating action**
- **Reduces piston contamination**

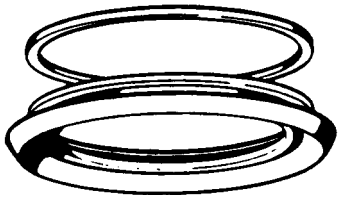

TYPICAL TRUCK DISC BRAKE KIT

DISC BRAKE PARTS IDENTIFICATION CHARTS

TYPICAL SINGLE PISTON SLIDING CALIPER DISC BRAKE ASSEMBLY

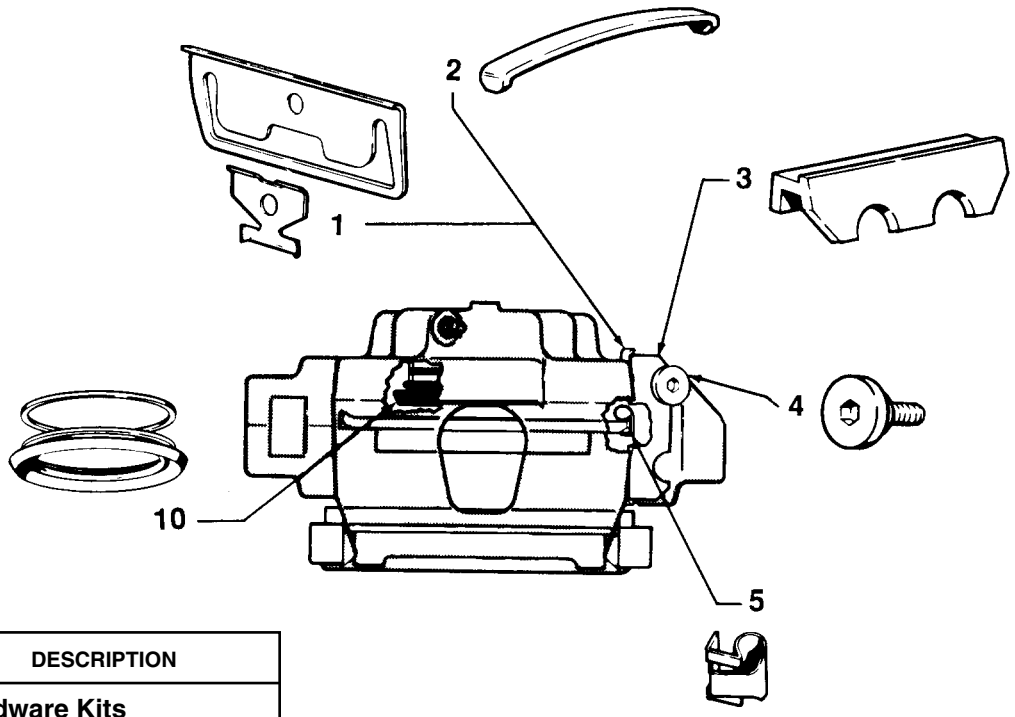

ITECM NO.	DESCRIPTION
Caliper Hardware Kits	
1	Retainer
2	Caliper Support Spring
3	Caliper Support Key
4	Caliper Bolt
5	Shoe Retainer
6	Stabilizers - Sleeves
7	Shoe Pin, Clip or Key Retainer
8	Shoe Retainer or Anti-Rattle Spring
9	Rubber Bushing or Pin Boot Kit
Caliper Seal Kits	
10	Seals & Boots

TYPICAL SINGLE PISTON FLOATING CALIPER DISC BRAKE ASSEMBLY

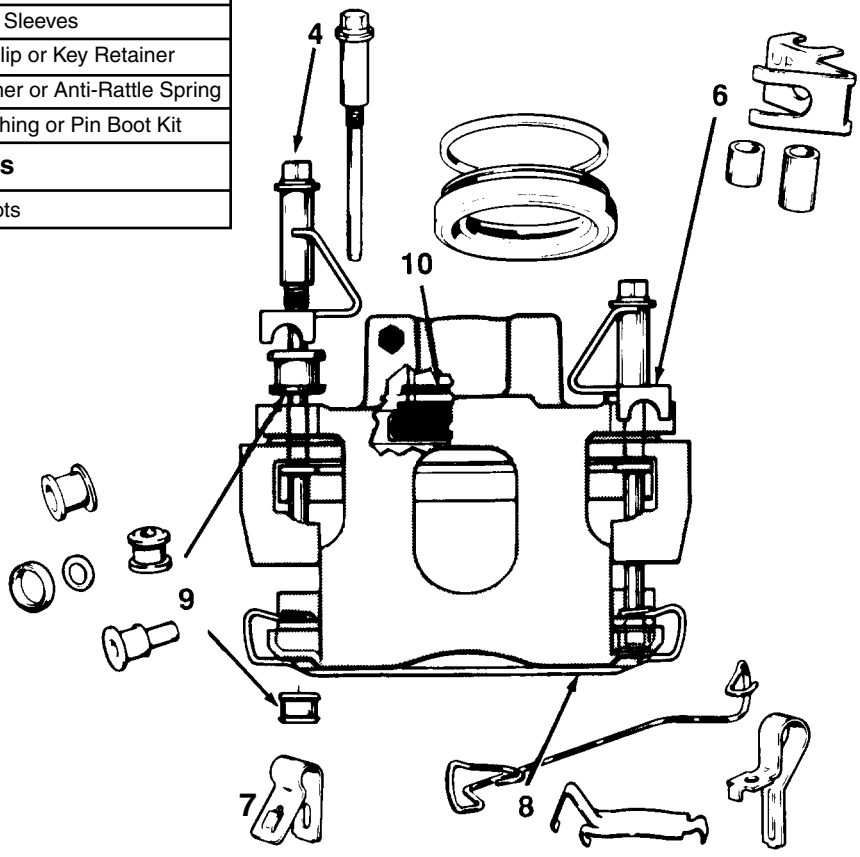

BENDIX HYDRAULIC DISC BRAKE

(3.38" Single Piston)

FMSI 7081A-D149

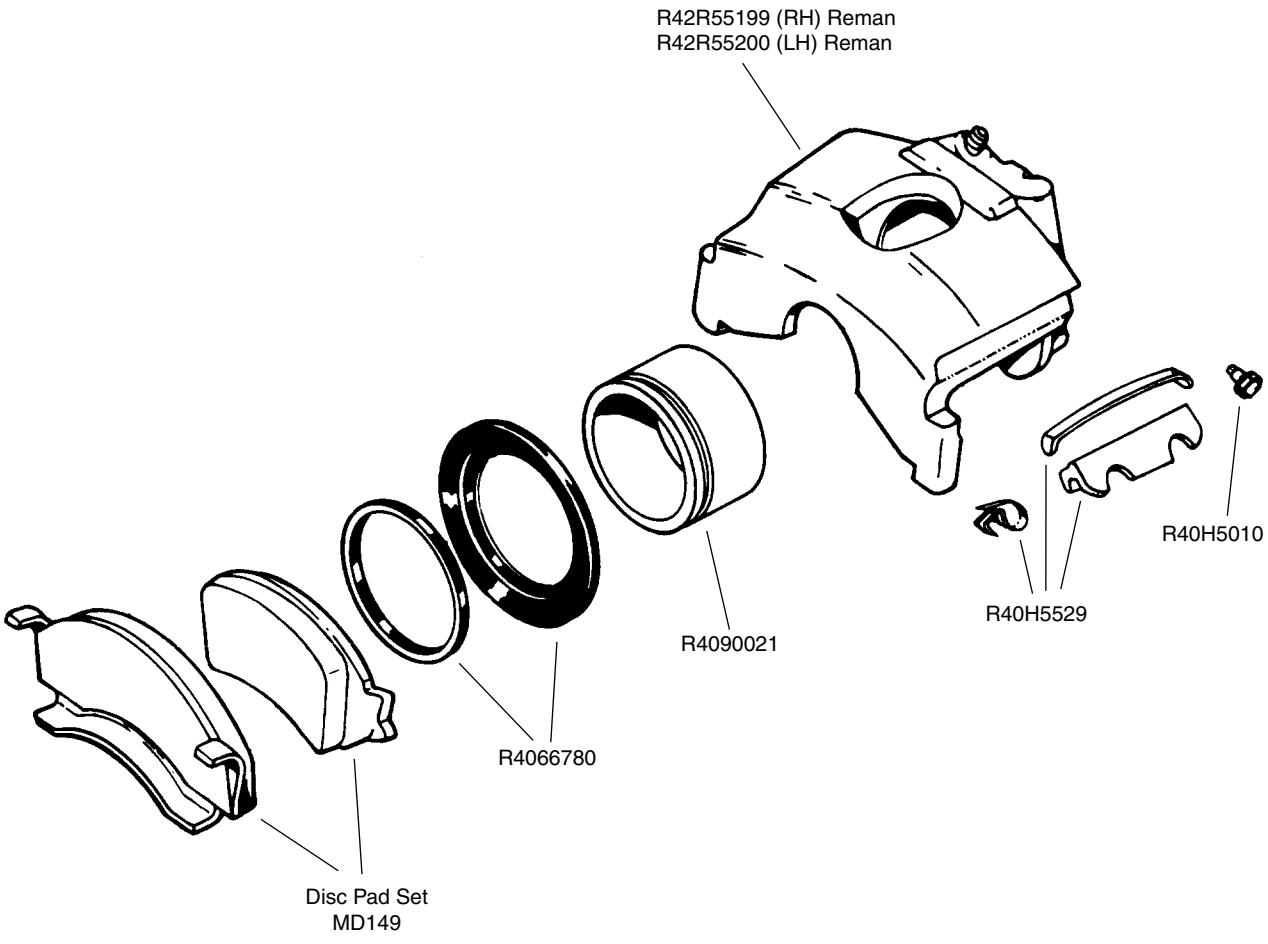

BENDIX HYDRAULIC DISC BRAKE PARTS

	MERITOR NO.	REPLACES	
HARDWARE KIT Services One Wheel 	**R40H5529**	Bendix H5529	
BOOT AND SEAL KIT 	**R4066780**	Bendix 66780	
GUIDE BOLT **CALIPER PISTON** 	**R40H5010**	Bendix H5010	
OUTER BRAKE PAD 3.375" Dia.	**R4090021** **Steel**	Bendix 90021	
Same as D89-O and D129-O **D149-O** 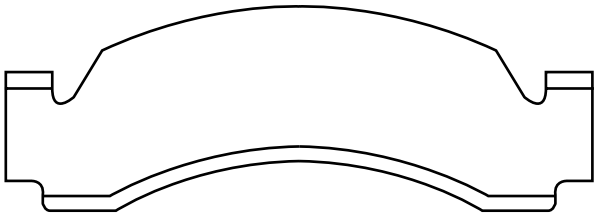 **INNER BRAKE PAD**	**MD149** **MMD149** **MVD149**	**BACKING PLATE LENGTH** 8 1/8"	**LINING LENGTH** 8"
D149-I 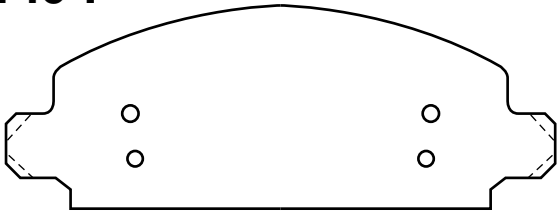 Wear Sensor Will Retrofit D89-I and D129-I		7 1/4"	6"

BENDIX HYDRAULIC DISC BRAKE

(3.38" Single Piston)

FMSI 7108-D184
7806-D184
7815-D184
7815-D380
7815-D717

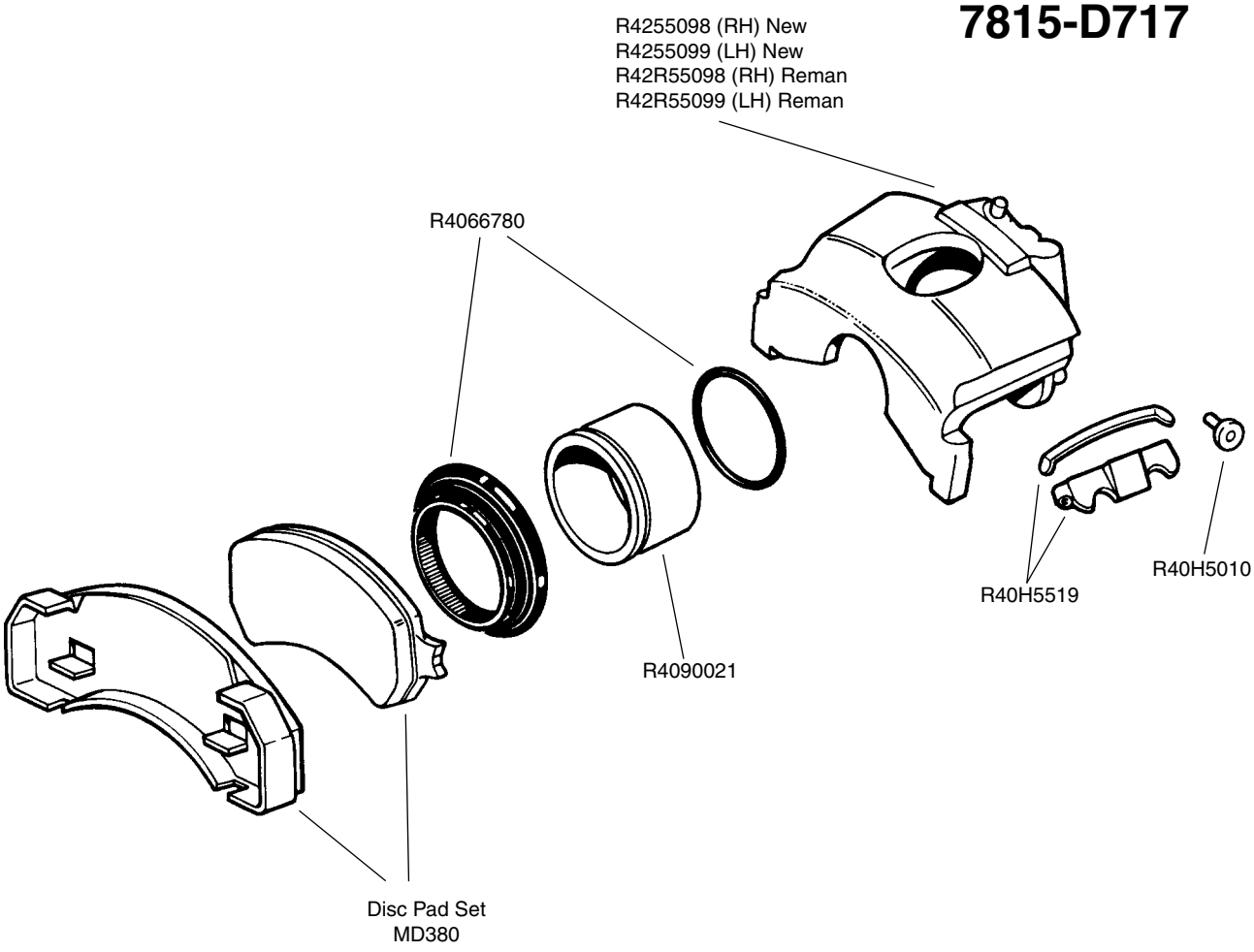

BENDIX HYDRAULIC DISC BRAKE PARTS

	MERITOR NO.	REPLACES
HARDWARE KIT Services One Wheel 	**R40H5519**	Bendix H5519 ITEC 44225C1 571667C1
BOOT AND SEAL KIT 	**R4066780**	Bendix 66780
GUIDE BOLT 	**R40H5010**	Bendix H5010 ITEC 442198C1
CALIPER PISTON 3.375" Dia.	**R4090021** **Steel**	Bendix 90021
D380-O **OUTER BRAKE PAD** 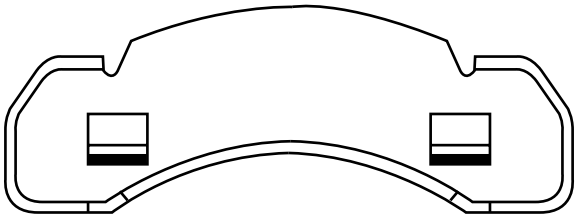 **(MOLDED)**	**MD184** **MMD184** **MD380** **MVD380**	**BACKING PLATE LENGTH**: 10 1/16" **LINING LENGTH**: 10" **REPLACES**: ITEC 990952093
D380-I **INNER BRAKE PAD** 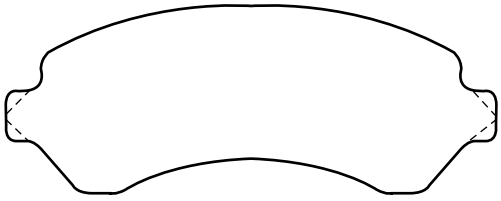 **(MOLDED)**		**BACKING PLATE LENGTH**: 8 5/64" **LINING LENGTH**: 6 53/64" **NOTE:** D184 is a riveted pad, D380 is integrally molded

BENDIX HYDRAULIC DISC BRAKE

(2.60" Twin Piston)
FIRST DESIGN
(Pre-1989)

FMSI 7108-D184
7806-D184
7815-D184
7815-D380
7815-D717

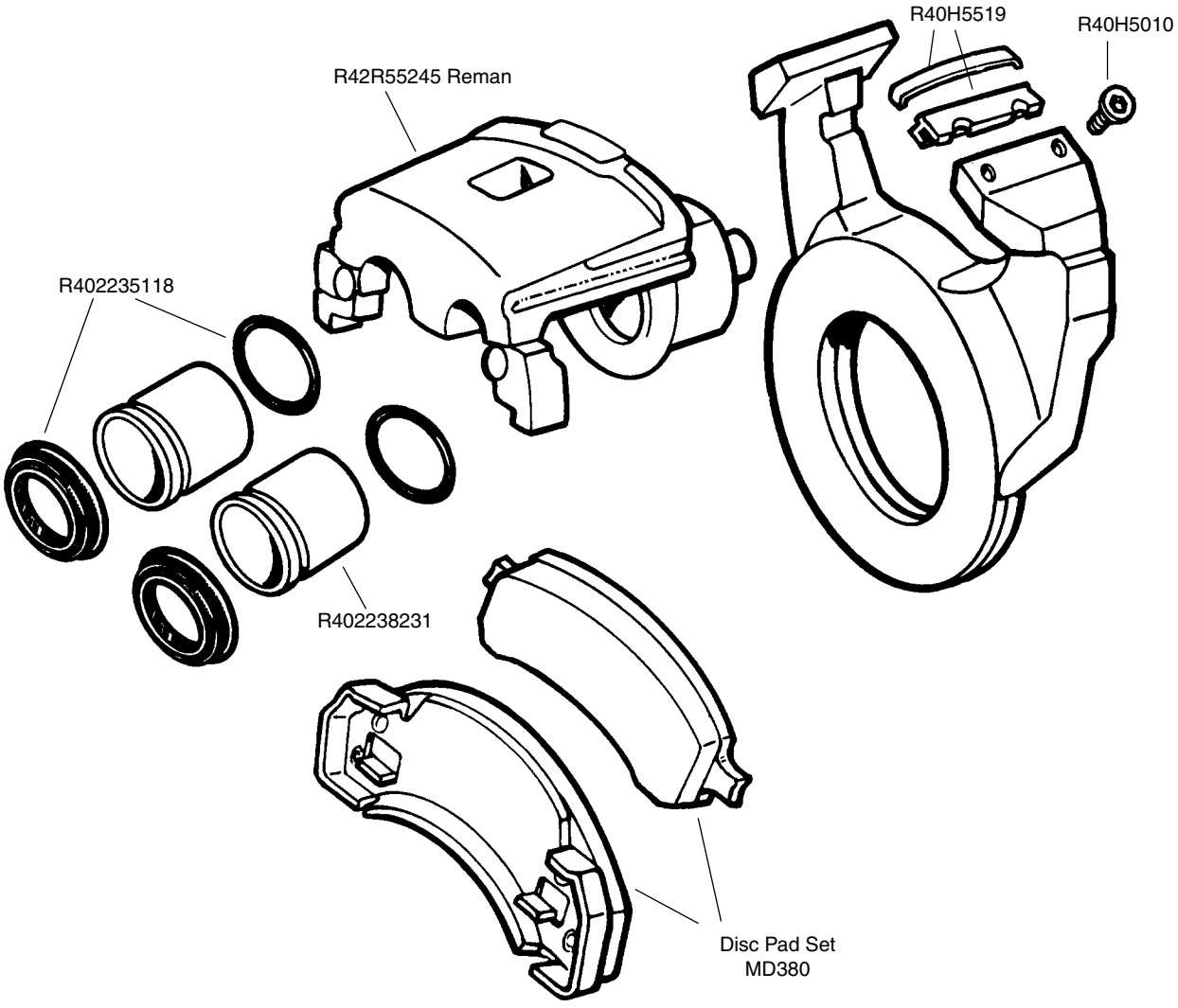

NOTE:
The First Design Caliper (R42R55245) and Second Design Caliper (R4255314, R42R55314) are interchangeable as assemblies, but their component parts are not.

BENDIX HYDRAULIC DISC BRAKE PARTS

	MERITOR NO.	REPLACES
HARDWARE KIT Services One Wheel 	**R40H5519**	Bendix H5634 ITEC 442255C1 571667C1
BOOT AND SEAL KIT 	**R402235118**	Bendix 66549 2235118 4150389 ITEC 582027C91 **First and Second Design Pistons and Seals are not interchangeable.**
GUIDE BOLT 	**R40H5010**	Bendix H5010 ITEC 442198C1
CALIPER PISTON 2.60" Dia.	**R402238231** **Steel**	Bendix 90055 2238231 ITEC 582025C1 **First and Second Design Pistons and Seals are not interchangeable.**

D380-O **OUTER BRAKE PAD**

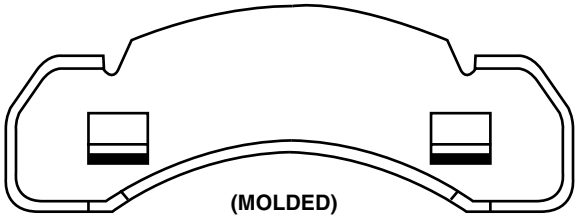

(MOLDED)

D380-I **INNER BRAKE PAD**

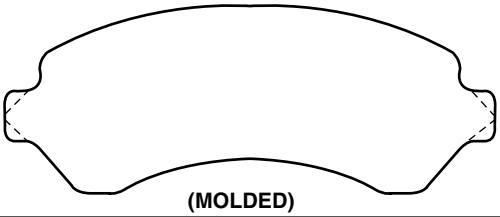

(MOLDED)

MMD184
MD184
MD380
MVD380

BACKING PLATE LENGTH	REPLACES
10 1/16"	ITEC 990952C93
LINING LENGTH	
10"	
BACKING PLATE LENGTH	
8 5/64"	
LINING LENGTH	
6 53/64"	

NOTE: D184 is a riveted pad, D380 is integrally molded

BENDIX HYDRAULIC DISC BRAKE

(2.60" Twin Piston)
SECOND DESIGN
(Effective with Model Year 1989)

FMSI 7108-D184
7806-D184
7815-D184
7815-D380
7815-D717

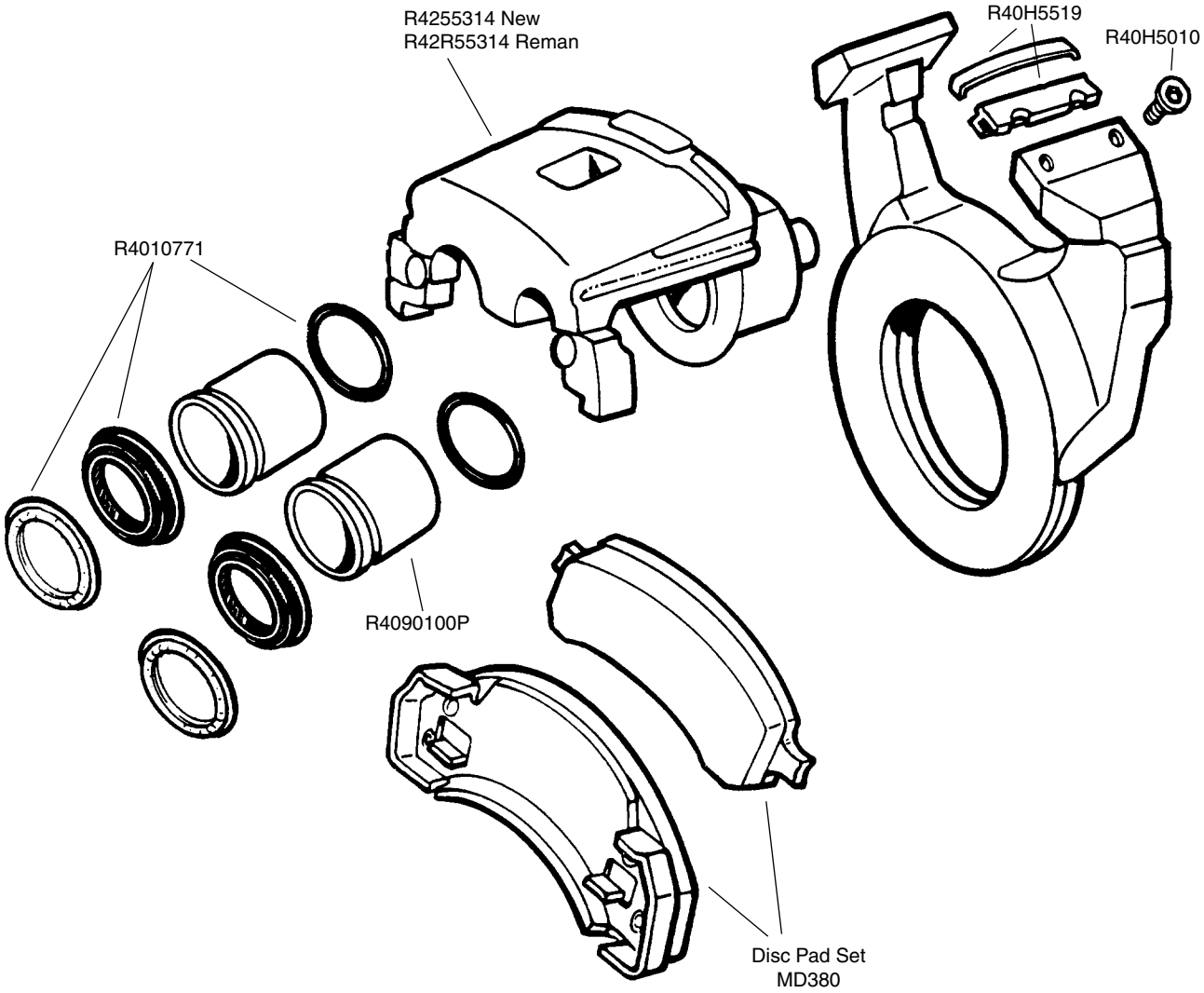

NOTE:
The First Design Caliper (R42R55245) and Second Design Caliper (R4255314, R42R55314) are interchangeable as assemblies, but their component parts are not.

BENDIX HYDRAULIC DISC BRAKE PARTS

	MERITOR NO.	REPLACES
HARDWARE KIT Services One Wheel 	**R40H5519**	Bendix H5634 ITEC 442255C1 571667C1
BOOT AND SEAL KIT **(SECOND DESIGN)** 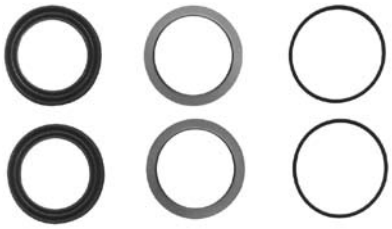	**R4010771**	Bendix 10771 Second Design Boot Seal is made with a metal insert and is driven into the caliper housing. Second Design Boot Seal has only 2 folds in the rubber. **First and Second Design Pistons and Seals are not interchangeable.**
GUIDE BOLT 	**R40H5010**	Bendix H5010 ITEC 442198C1
CALIPER PISTON 2.60" Dia.	**R4090100P** **Phenolic/Steel**	Bendix 4151728 Second Design Piston is phenolic with a metal "face" designed to reduce wear caused by abrasion on the Disc Pad. **First and Second Design Pistons and Seals are not interchangeable.**

D380-O **OUTER BRAKE PAD**

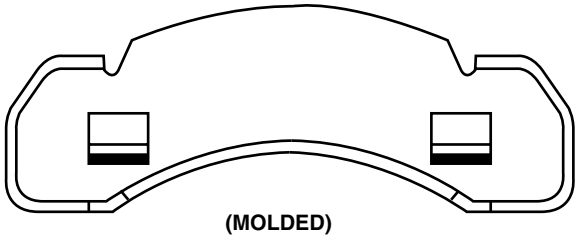

(MOLDED)

D380-I **INNER BRAKE PAD**

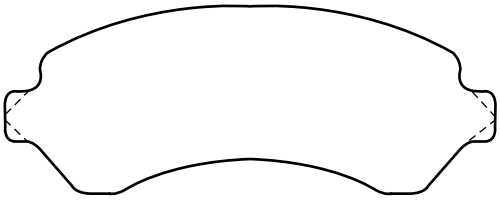

(MOLDED)

MM184
MD184
MD380
MVD380

BACKING PLATE LENGTH	REPLACES
10 1/16"	ITEC 990952C93 **NOTE:** D184 is a riveted pad, D380 is integrally molded
LINING LENGTH	
10"	
BACKING PLATE LENGTH	
8 5/64"	
LINING LENGTH	
6 53/64"	

BENDIX HYDRAULIC DISC BRAKE

(2.88" Twin Piston)
FIRST DESIGN
(Pre-1988)

FMSI 7142-D225
(Optional 7808-D225)

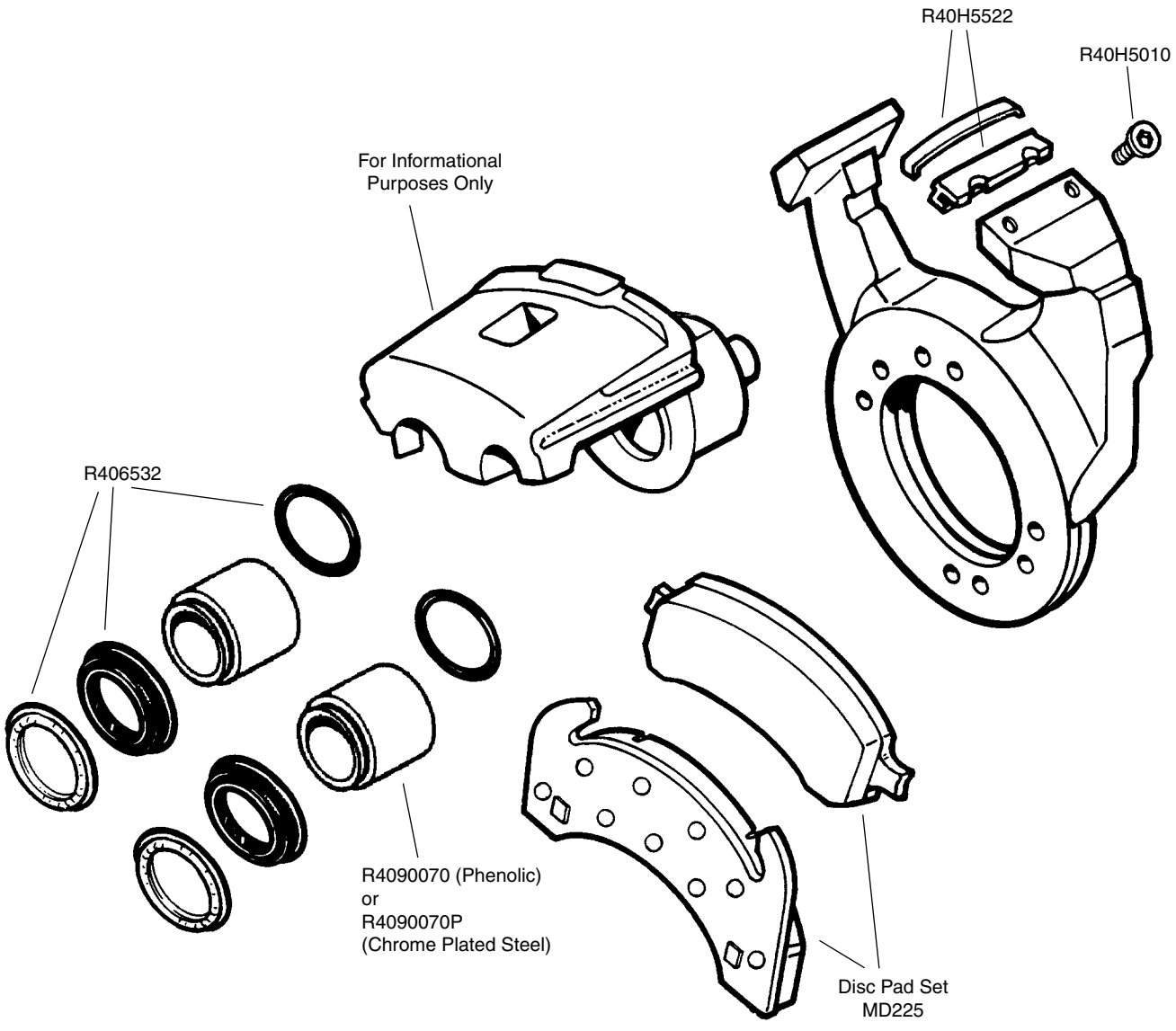

NOTE:
The First and Second Design Caliper are interchangeable as assemblies, but their component parts are not.

BENDIX HYDRAULIC DISC BRAKE PARTS

	MERITOR NO.	REPLACES
HARDWARE KIT Services One Wheel 	**R40H5522**	Bendix H5635 GM 15501010 15501013 ITEC 593644C1 592693C1
BOOT AND SEAL KIT **(FIRST DESIGN)** 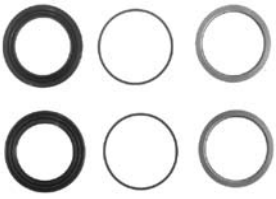	**R406532**	Bendix 66532 GM 1551254 **First and Second Design Pistons and Seals are not interchangeable.**
GUIDE BOLT 	**R40H5010**	Bendix H5010 ITEC 442198C1
CALIPER PISTON 2.88" Dia.	**R4090070** **Phenolic** **R4090070P** **Chrome Plated Steel Version of R4090070**	Bendix 90070 GM 15514588 ITEC 593694C1 **First and Second Design Pistons and Seals are not interchangeable.**

D225-O **OUTER BRAKE PAD**

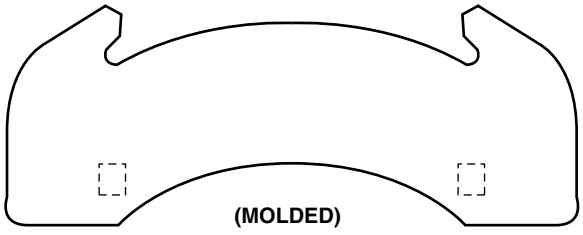

(MOLDED)

D225-I **INNER BRAKE PAD**

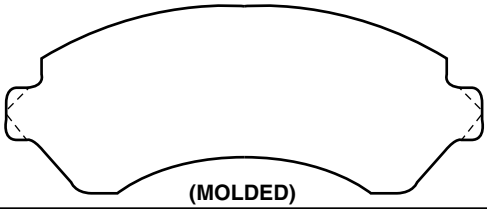

(MOLDED)

MD225
MMD225
MVD225

BACKING PLATE LENGTH	REPLACES
10 5/8"	ITEC 1694274C91 990953C93
LINING LENGTH	
10 1/2"	
BACKING PLATE LENGTH	
8 5/64"	
LINING LENGTH	
6 53/64"	

BENDIX HYDRAULIC DISC BRAKE

(2.88" Twin Piston)
SECOND DESIGN
(Effective with Model Year 1988 ITEC and GM Medium-Duty Trucks)

FMSI 7142-D225
(Optional 7808-D225)

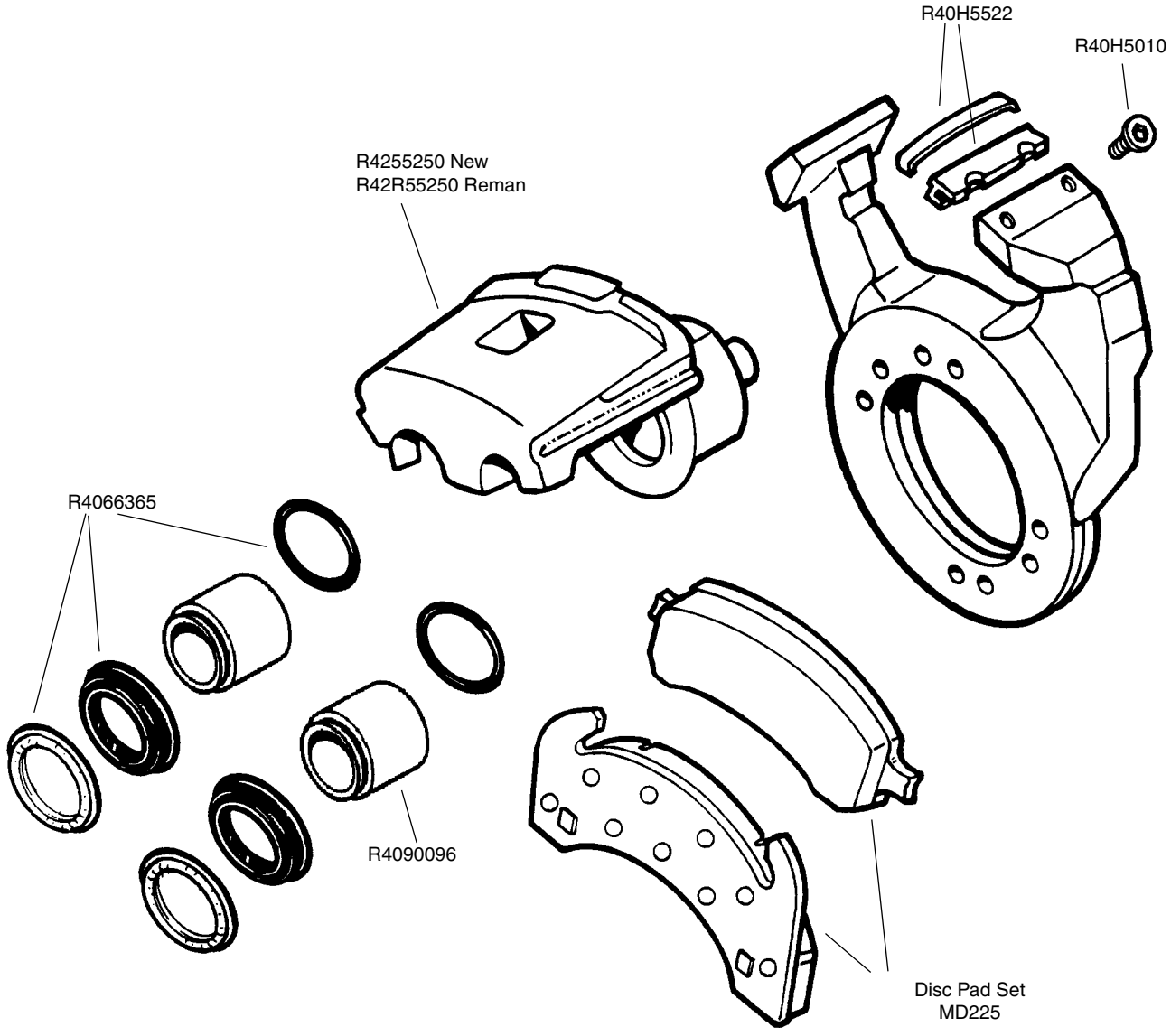

NOTE:
The First and Second Design Caliper are interchangeable as assemblies, but their component parts are not.

NOTE:
Freightliner with Air Suspension
R4255656

BENDIX HYDRAULIC DISC BRAKE PARTS

	MERITOR NO.	REPLACES
HARDWARE KIT Services One Wheel 	**R40H5522**	Bendix H5635 GM 15501010 15501013 ITEC 593644C1 592693C1
BOOT AND SEAL KIT 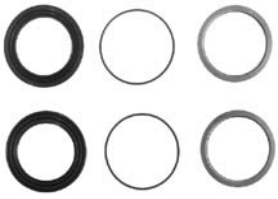	**R4066365**	Bendix 66381 Second Design Boot Seal is made with a metal insert and is driven into the caliper housing. Second Design Boot Seal has only 2 folds in the rubber. **First and Second Design Pistons and Seals are not interchangeable.**
GUIDE BOLT 	**R40H5010**	Bendix H5010 ITEC 442198C1
CALIPER PISTON 2.88" Dia.	**R4090096** **Phenolic/Steel**	Bendix 90096 Second Design Piston is phenolic with a metal "face" designed to reduce wear caused by abrasion on the Disc Pad. **First and Second Design Pistons and Seals are not interchangeable.**

D225-O **OUTER BRAKE PAD**

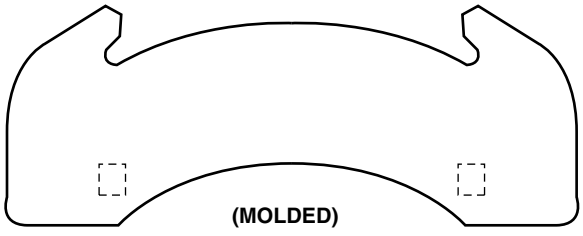

D225-I **INNER BRAKE PAD**

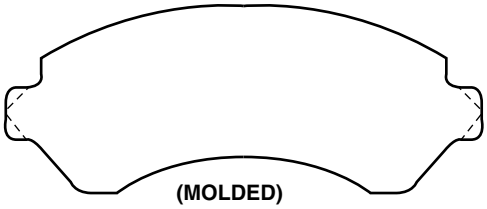

MD225
MMD225
MVD225

BACKING PLATE LENGTH	REPLACES
10 5/8"	ITEC 1694274C91 990953C93
LINING LENGTH	
10 1/2"	
BACKING PLATE LENGTH	
8 5/64"	
LINING LENGTH	
6 53/64"	

Pin Slide Disc Brake Components (66MM)

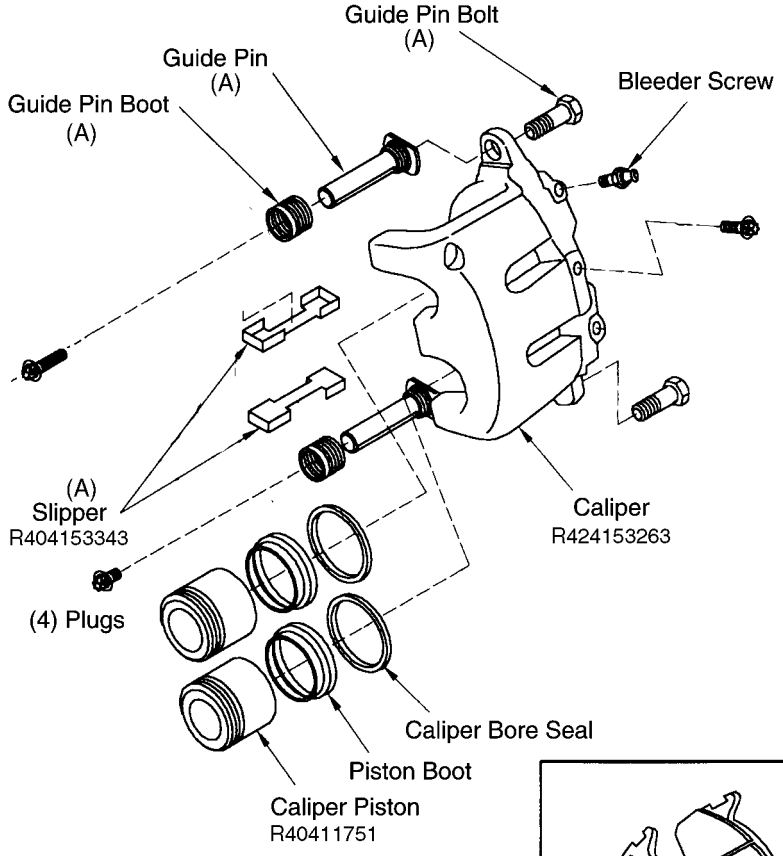

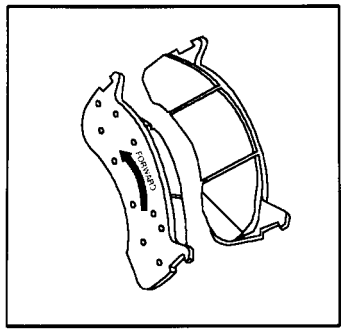

BRAKE PADS
MD786A

A	**Contained in Guide Pin Kit R4011754**

BOSCH HYDRAULIC DISC BRAKE

	MERITOR NO.	REPLACES
GUIDE PIN KIT Services One Wheel 	**R4011754**	Bosch 2 BX4153343 Slippers 2 BX4153232 Guide Pin Boot 2 BX4153231 Guide Pin 2 BX4153235 Guide Pin Bolt
	R404153343	Bosch 4 BX4153343 Slipper
BOOT AND SEAL KIT 	**R4011752** (66MM)	Bosch BX3213580 (Seal) BX4153266 (Boot)
CALIPER PISTON 66MM Dia. (not actual Piston shown)	**R4011751** (66MM)	Bosch BX4153264 (Piston)
D786 **OUTER AND INNER BRAKE PAD** 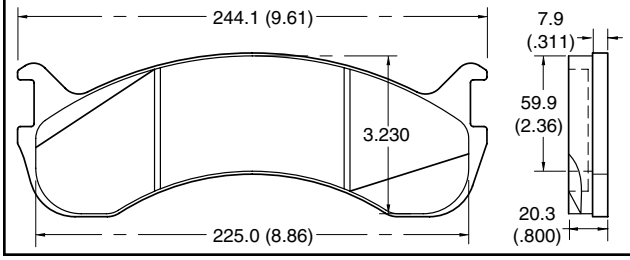	**MM786A** **MD786A** **MVD786A**	KIT D786A FMSI 7654D786 Thin Set ITEC 2501842C91

Pin Slide Disc Brake Components (73MM)

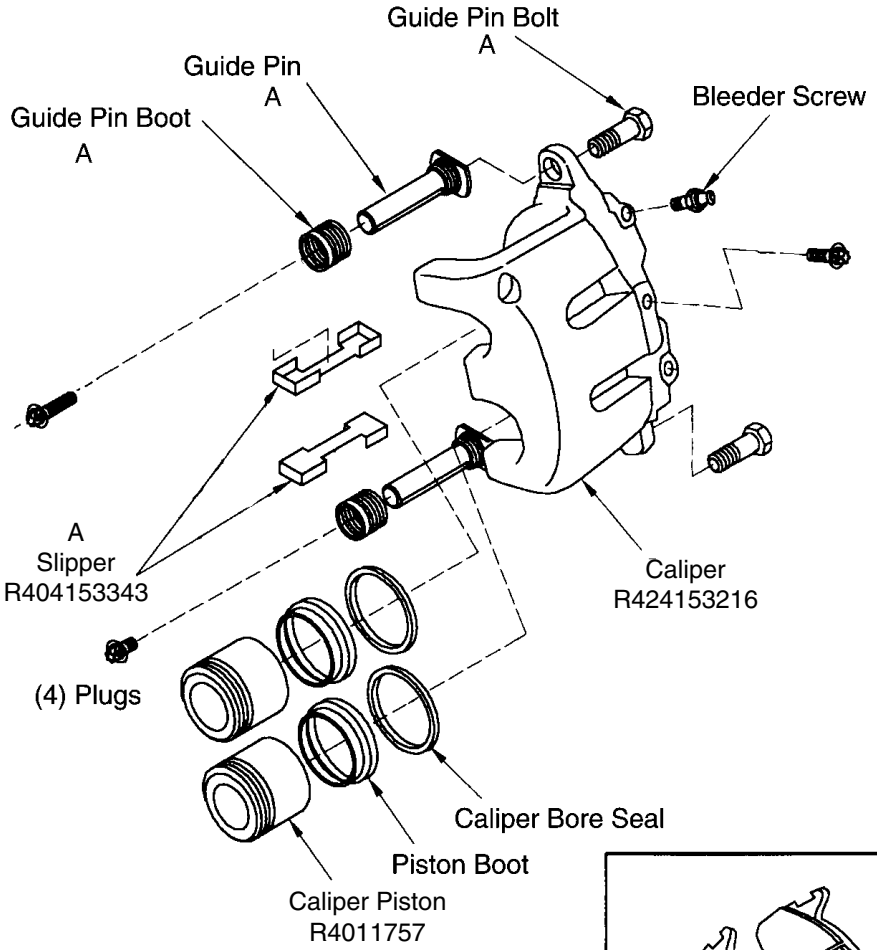

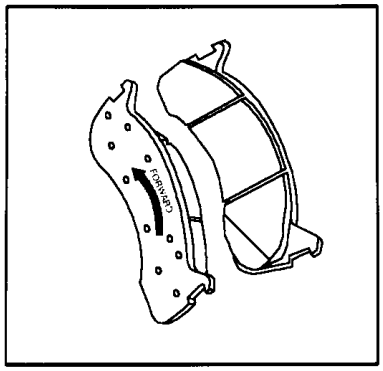

BRAKE PADS
MD786A

A	**Contained in Guide Pin Kit R4011754**

BOSCH HYDRAULIC DISC BRAKE

	MERITOR NO.	REPLACES
GUIDE PIN KIT Services One Wheel 	**R4011754**	Bosch 2 BX4153343 Slippers 2 BX4153232 Guide Pin Boot 2 BX4153231 Guide Pin 2 BX4153235 Guide Pin Bolt
	R404153343	Bosch 4 BX4153343 Slippers
BOOT AND SEAL KIT 	**R4011758** (73MM)	Bosch BX22338679 (Seal) BX4153219 (Boot)
CALIPER PISTON 73MM Dia. (not actual Piston shown)	**R4011757** (73MM)	Bosch BX4153217 (Piston)
D786 **OUTER AND INNER BRAKE PAD** 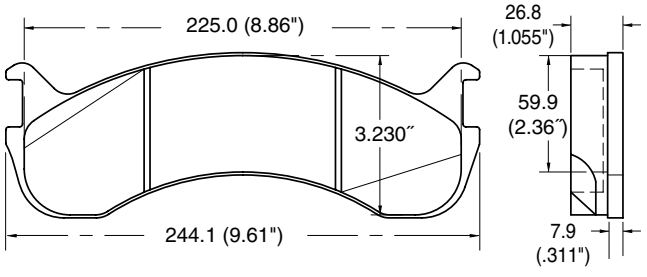	**MMD786** **MD786** **MVD786**	KIT D786S FMSI 7655D786 ITEC 2501841C91

GUNITE (KELSEY-HAYES) HYDRAULIC DISC BRAKE

3 5/8" Dia. (3.62")
(Air Over Hydraulic)

FMSI 7098-D171
7041-D105

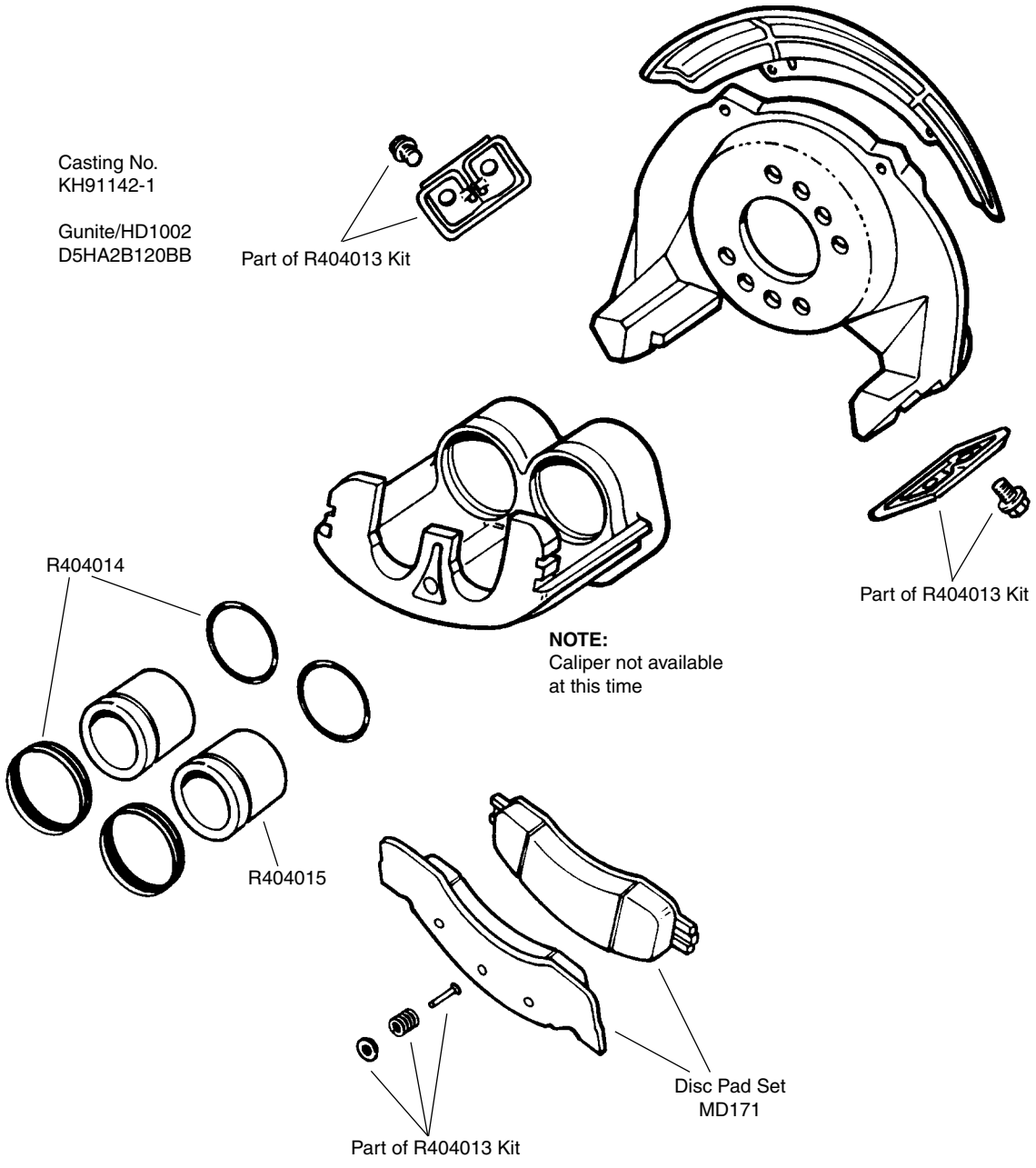

Rotors:

R44141856	**D5HZ-1102A**	**(Gunite No. R3065X)**
N/A	**D5HZ-1102B**	**(Gunite No. R3064X)**

GUNITE (KELSEY-HAYES) HYDRAULIC DISC BRAKE

	MERITOR NO.	REPLACES
HARDWARE KIT Services One Wheel 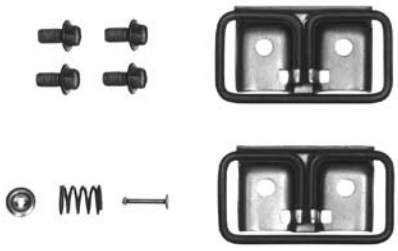	**R404013**	Gunite HD8001
BOOT AND SEAL KIT 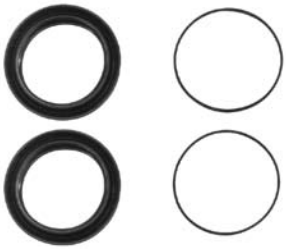	**R404014**	Gunite HD5004
CALIPER PISTON 3.625" Dia.	**R404015** **Steel**	Gunite HD5005
D171-I **INNER BRAKE PAD** 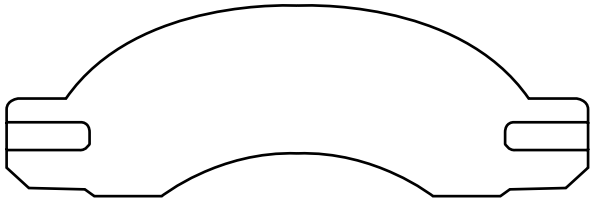 **(MOLDED)** (Has 1/4" radius removed)	**MD171** **MMD171** **MVD171**	Gunite HD3002B (Gunite Kit includes Pads, Pins, Springs and Clips)
D171-O **OUTER BRAKE PAD** 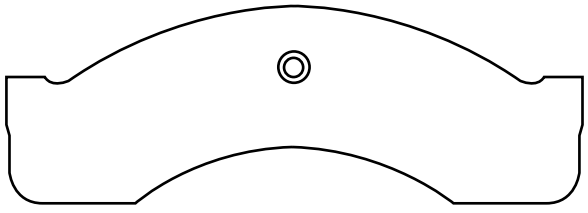 **(MOLDED)** (Has 1/4" radius removed)		

GUNITE (KELSEY-HAYES) HYDRAULIC DISC BRAKE

FOR FORD F450 SUPER DUTY

FMSI 7299-D411

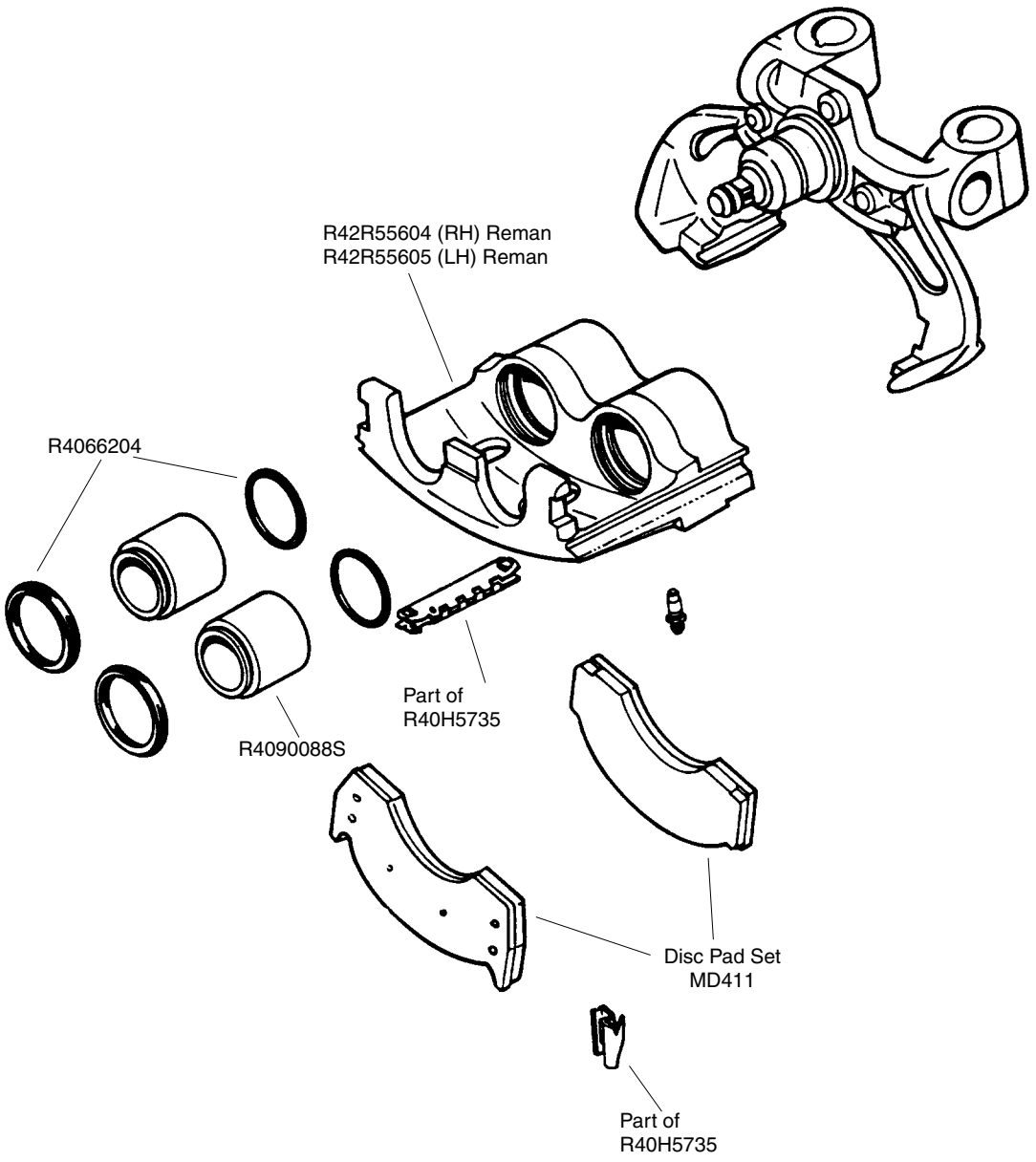

GUNITE (KELSEY-HAYES) HYDRAULIC DISC BRAKE PARTS

	MERITOR NO.	REPLACES
HARDWARE KIT Services One Axle 	**R40H5735**	Ford E8TZ-2B164A E8TZ-2C150A
BOOT AND SEAL KIT 	**R4066204**	Ford E8TZ-2120A
CALIPER PISTON 2.35" Dia.	**R4090088S** **Steel**	Ford E8TZ-2196B
INNER BRAKE PAD **D411-E** 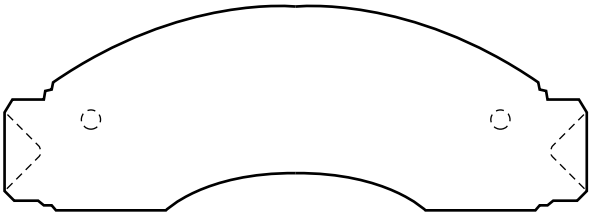 **(MOLDED)**	**MD411** **MMD411** **MVD411**	—
OUTER BRAKE PAD **D411-O** 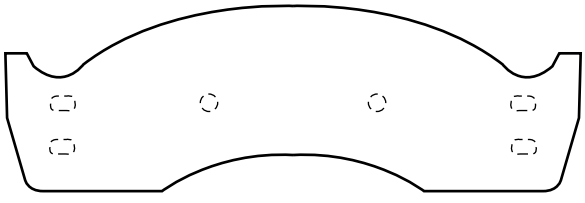 **(MOLDED)**		

FMSI 7054-D120

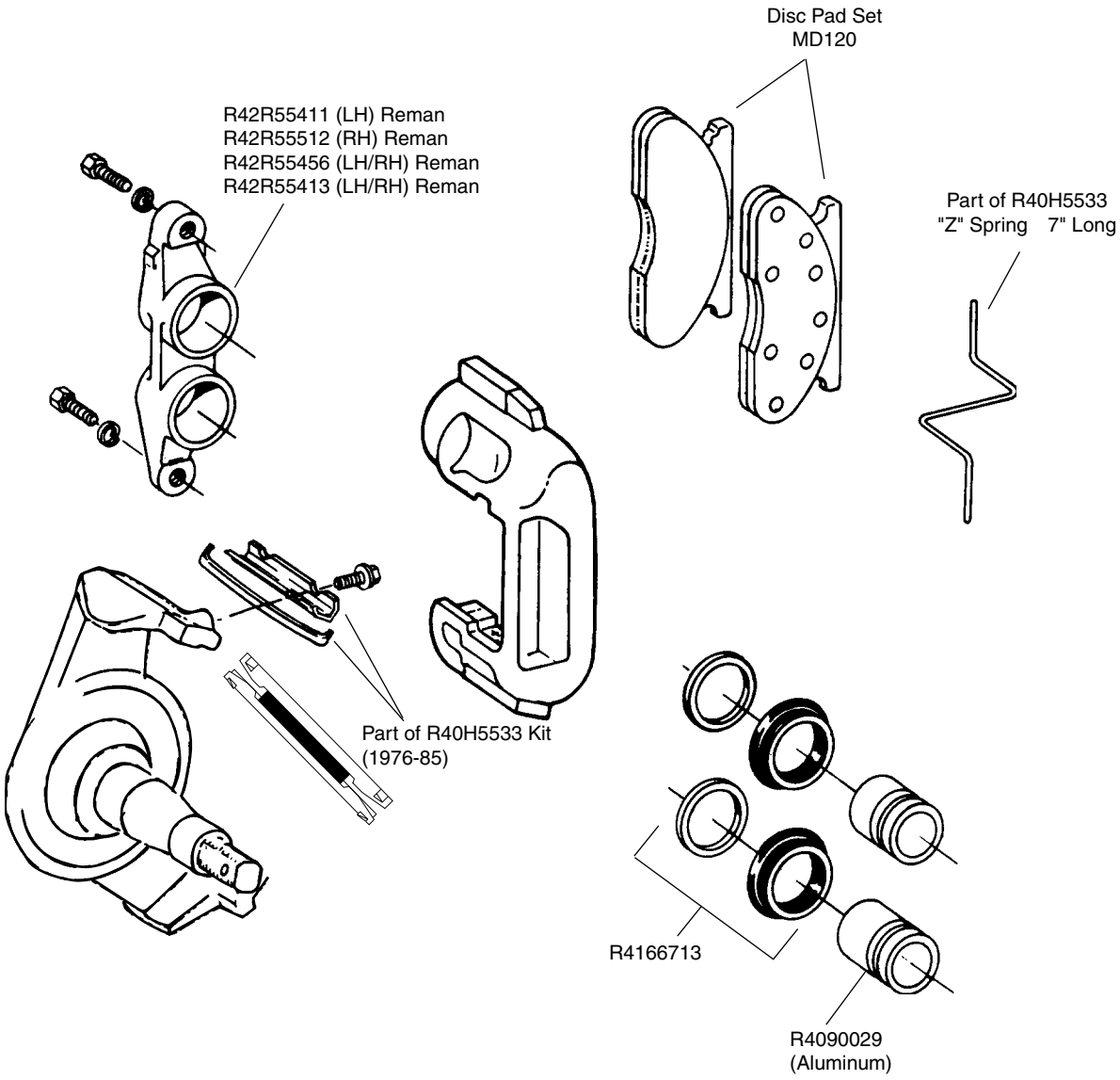

MERITOR HYDRAULIC DISC BRAKE PARTS

	MERITOR NO.	REPLACES
HARDWARE KIT Services One Wheel 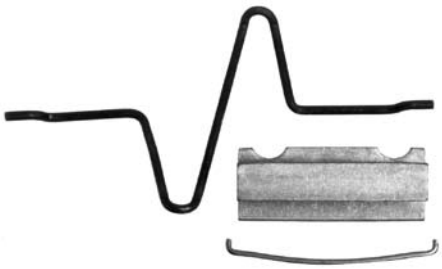 1976-1985	**R40H5533**	Bendix H5533 Meritor 60-050135 Use R4255250 Guide Bolt with this configuration (1976-1985). Note: Pad Retainer Spring 7" Long
HARDWARE KIT Services One Wheel 1986-1995	**R407130**	Carlson H5011 & H5420 Replaces R4255250 Guide Bolt, Support Key and Spring from R40H5533 (1986-1995). Note: Pad Retainer Spring 7" Long
BOOT AND SEAL KIT 	**R4166713**	Bendix 66713 Meritor 60-050136
CALIPER PISTON 2.181" Dia.	**R4090029** **Aluminum**	Bendix 90029 Meritor 69-270621

D120 **OUTER AND INNER BRAKE PAD**

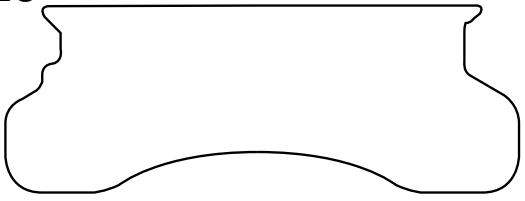

OEM Shoes with insulator have the same profile for inner/outer material location

MERITOR NO.	BACKING PLATE LENGTH	REPLACES
MD120 **MMD120** **MVD120**	7 9/16"	Meritor 60-050169
	LINING LENGTH	
	7 7/16"	

MERITOR HYDRAULIC DISC BRAKE

(2.50" Twin Piston)

FMSI 7141-D224
(Optional 7807-D224)

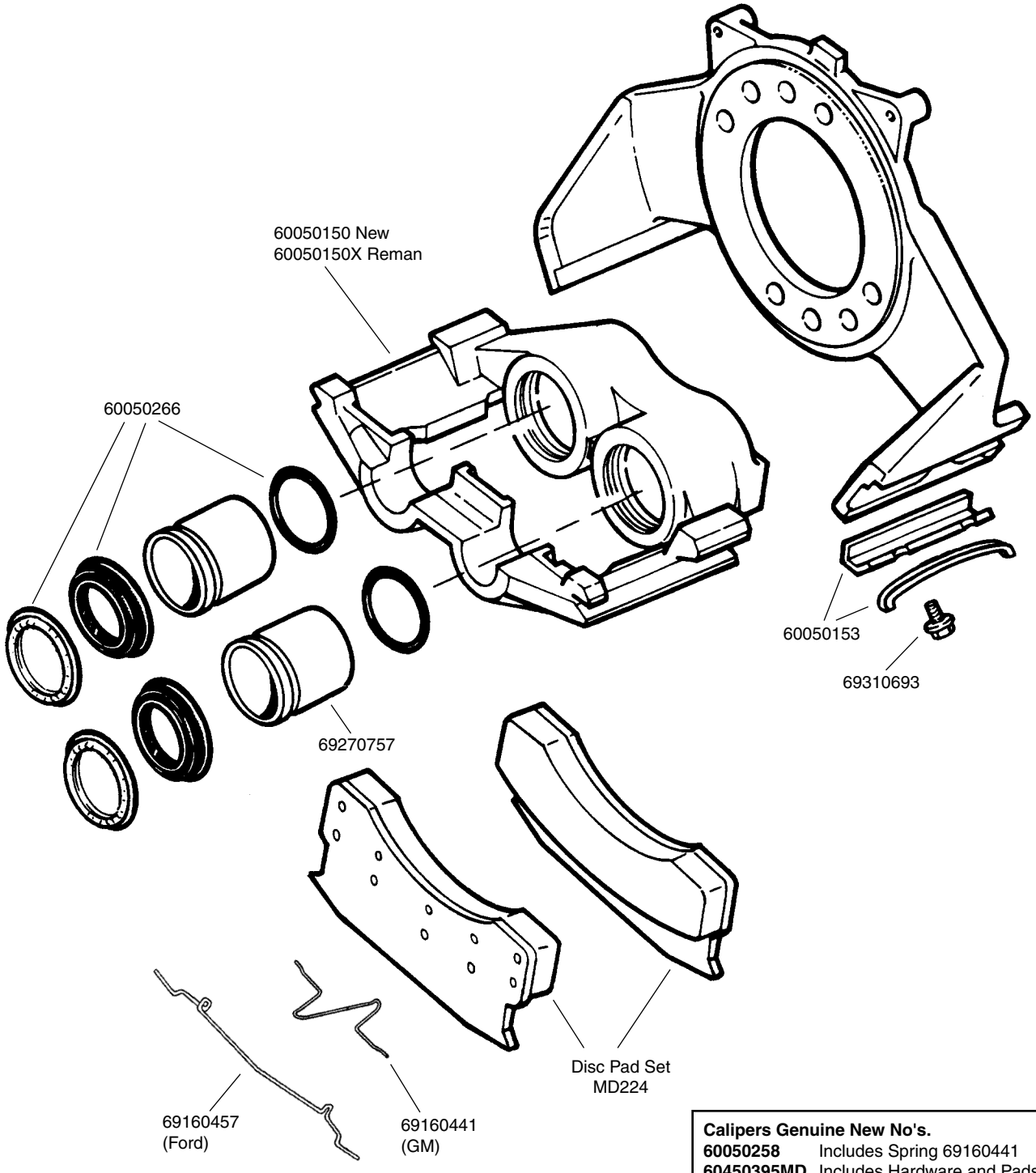

Calipers Genuine New No's.	
60050258	Includes Spring 69160441
60450395MD	Includes Hardware and Pads
60050150	Bare Caliper Assembly
Calipers All Makes New	
R4255251	Bare Caliper Assembly

MERITOR HYDRAULIC DISC BRAKE PARTS

	MERITOR NO.	REPLACES
HARDWARE KIT Services One Wheel 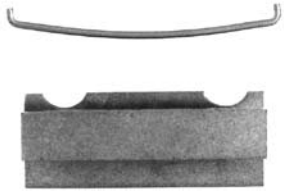	**60050153**	Ford E4HZ-28487A E4HZ-28552A GM 15501147 Meritor 69-420654 69-69160383
BOOT AND SEAL KIT 	**60050266**	Ford E4HZ-2207A GM 15510025 Meritor 60-50151
GUIDE BOLT 	**69310693**	Carlson H5037 For Use With 60050153 Kit
DISC PAD RETAINER CLIP **FORD** 	**69160457**	—
DISC PAD RETAINER CLIP **GM** 	**69160441**	Meritor 69-160441B
CALIPER PISTON 2.50" Dia.	**69270757** **Aluminum**	Meritor 69-270757

D224 OUTER AND INNER BRAKE PAD		BACKING PLATE LENGTH	REPLACES
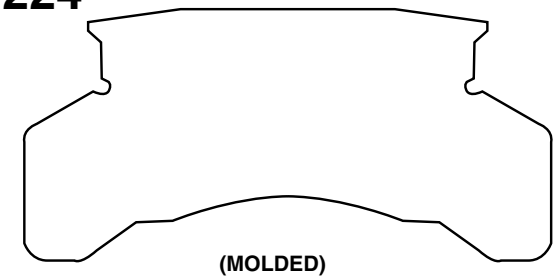 **(MOLDED)**	**MD224** **MMD224** **MVD224**	$8\ ^{13}/_{32}$"	Meritor 69-240767
		LINING LENGTH	
		$8\ ^{11}/_{32}$"	

MERITOR HYDRAULIC DISC BRAKE

(2.88" Twin Piston)

FMSI 7149-D236
7809-D236

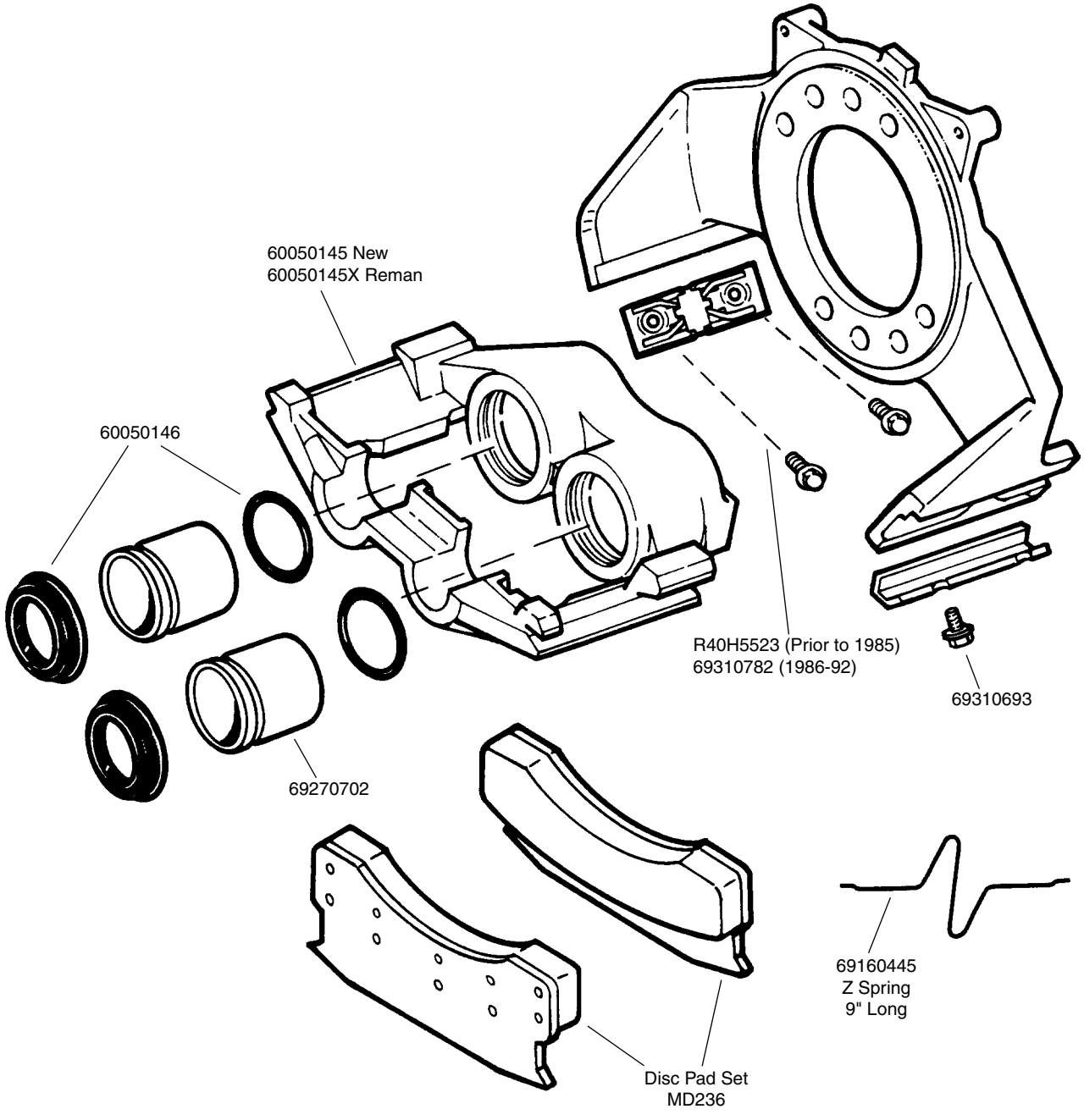

MERITOR HYDRAULIC DISC BRAKE PARTS

	MERITOR NO.	REPLACES
HARDWARE KIT Services One Axle 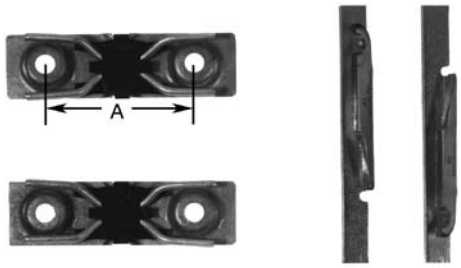 Meritor has changed the caliper keys contained in the new kits to separate left hand and right hand keys. Because the end user probably will not know which caliper key is needed, Meritor now supplies both keys in the new kits which service one axle.	**R408574** R40H5523 (Prior to 1985) Replaces (2) N/A	Meritor 69-160430 (Stamped 69-160429) 69-420736 69-420737 Retainer Hole Dia. = 13/32" A=3 3/8"
	R408576 69310782 (1986-96)	Meritor 69-160453 (Stamped 69-160453) 69-420736 69-420737 Retainer Hole Dia. = 7/16" A=3 5/8"
BOOT AND SEAL KIT 	**60050146**	Meritor 69-050146
GUIDE BOLT 	**69310693**	For Use With R40H5523, 69310782 Meritor 69310782
CALIPER PISTON 2.88" Dia.	**69270702** **Aluminum**	Meritor 69-270702
DISC PAD RETAINER CLIP 	**69160445**	Meritor 69-160445B Note: Disc Pad Retainer 9" Long

D236 OUTER AND INNER BRAKE PAD		BACKING PLATE LENGTH	REPLACES
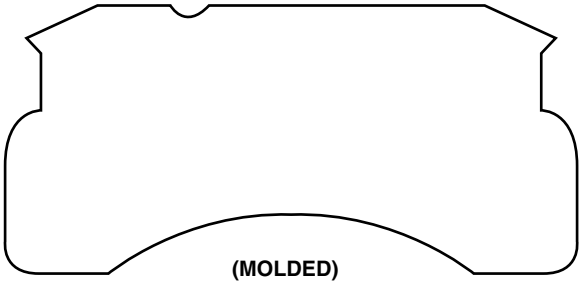 **(MOLDED)**	**MD236** **MMD236** **MVD236**	9" **LINING LENGTH** 8 15/16"	Meritor 69-240770

MERITOR HYDRAULIC DISC BRAKE

4 x 64MM Quadraulic
Phenolic Piston
7/16"-24 Inlet

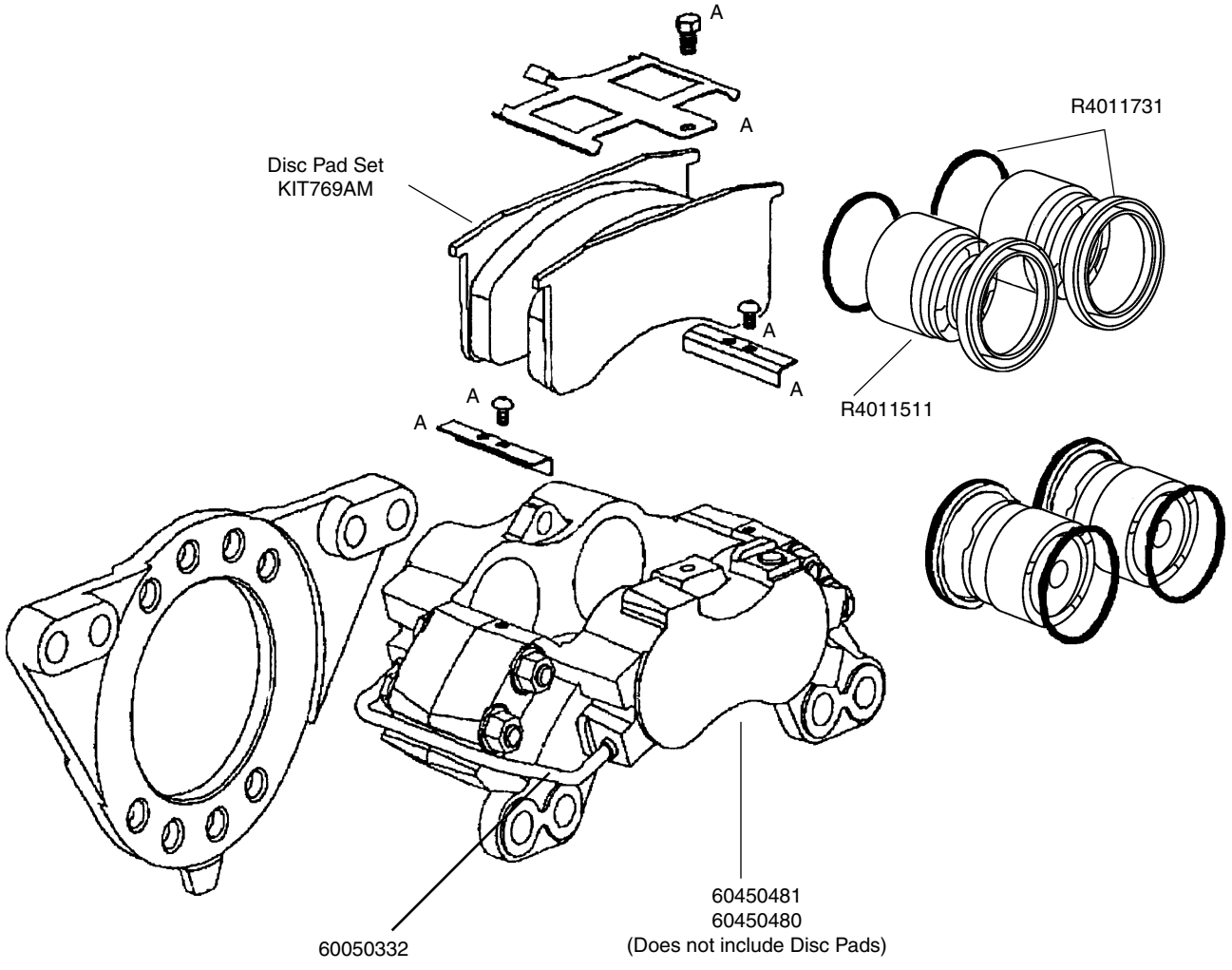

Note: See Meritor Qualdraulic Disc Brake ID Chart in the Calipers section, page 5-54, on how to ID.

A	**Contained in Hardware R4011729**

60450481008
60450480008
Includes Disc Pads
KITD769GM

MERITOR HYDRAULIC DISC BRAKE

	MERITOR NO.	REPLACES
HARDWARE KIT Services One Wheel 	**R4011729**	Meritor 1 69160483 (Anti-Rattle Spring) 1 69310818 (Bolt) 2 69330709 (Lining Spacer) 2 69310819 (Lining Spacer Bolt)
BOOT AND SEAL KIT 	**R4011731** (64MM)	Meritor 69170343 (Seal) 69340647 (Boot)
CALIPER PISTON 64MM Dia.	**R4011511** (64MM)	Meritor 69260551 (Piston) 69330719 (Heat Shield)
D769 **OUTER AND INNER BRAKE PAD** 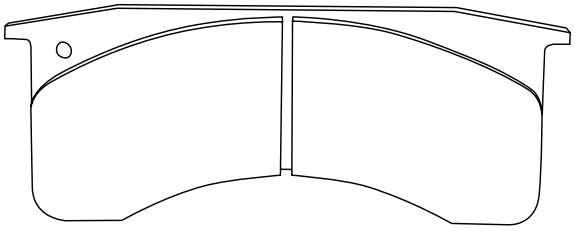	**KITD769AM** **KITD769GM** **MD769** **MVD769** **MMD769**	FMSI 7636 **Note:** FMSI 7636D1032 is the same as 7636D769. The lining did not change. While the backing plates are the same dimension, the D1032 plate includes a lug used to attach a squealer tab required by some OEMs. The existing Meritor disc pads already meet this requirement.

MERITOR HYDRAULIC DISC BRAKE

4 x 70MM Quadraulic
Phenolic Piston
7/16"-24 Inlet

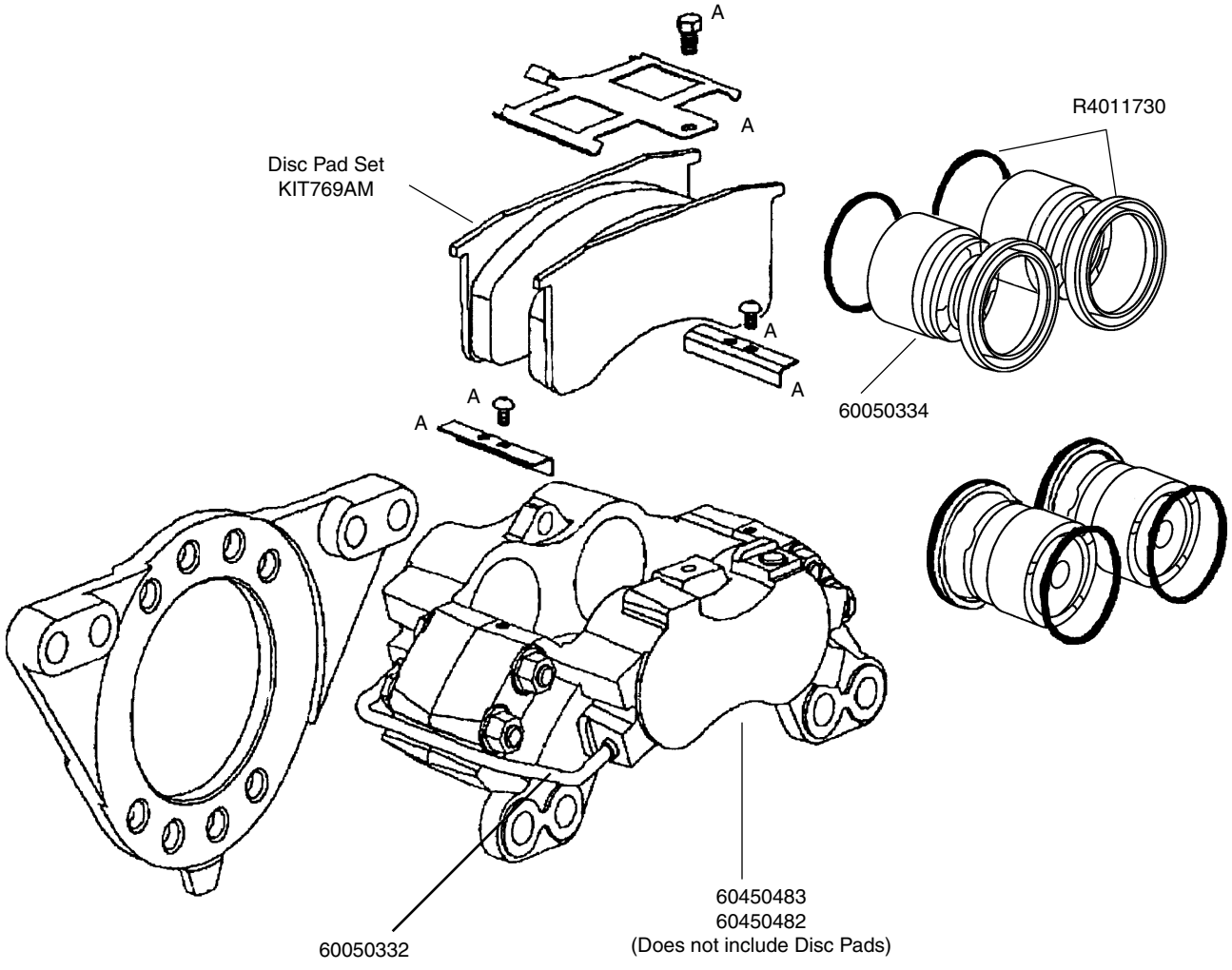

Note: See Meritor Qualdraulic Disc Brake ID Chart in the Calipers section, page 5-54, on how to ID.

A	**Contained in Hardware R4011729**

60450483008
60450482008
Includes Disc Pads
KITD769GM

MERITOR HYDRAULIC DISC BRAKE

	MERITOR NO.	REPLACES
HARDWARE KIT Services One Wheel 	**R4011729**	Meritor 1 69160483 (Anti-Rattle Spring) 1 69310818 (Bolt) 2 69330709 (Lining Spacer) 2 69310814 (Lining Spacer Bolt)
BOOT AND SEAL KIT 	**R4011730**	Meritor 4 69340646 (Boot) 4 69170337 (Seal)
CALIPER PISTON 70MM Dia.	**60050334** Phenolic	Meritor 1 60050334 (Piston) or 1 69260549 (Piston)
D769 **OUTER AND INNER BRAKE PAD** 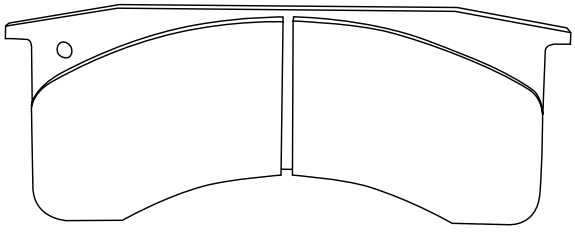	**KITD769GM** **KITD769AM** **MD769** **MVD769** **MMD769**	FMSI 7636 **Note:** FMSI 7636D1032 is the same as 7636D769. The lining did not change. While the backing plates are the same dimension, the D1032 plate includes a lug used to attach a squealer tab required by some OEMs. The existing Meritor disc pads already meet this requirement.

4 x 70MM Quadraulic
Steel Piston
M10 x 1.5 Inlet Port

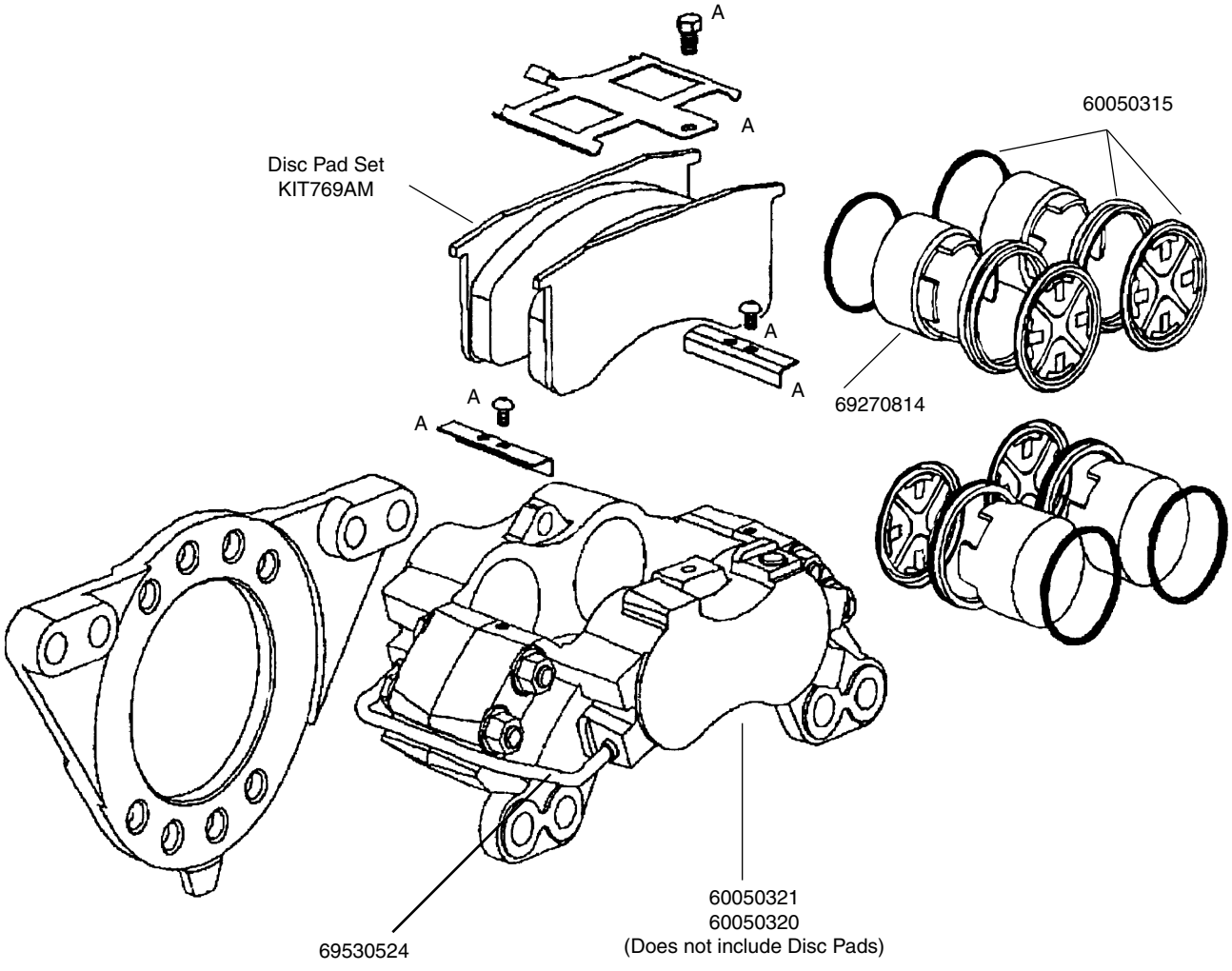

Note: See Meritor Qualdraulic Disc Brake ID Chart in the Calipers section, page 5-54, on how to ID.

A	**Contained in Hardware R4011121**

60450455
60450454
Includes Disc Pads
KITD769GM

MERITOR HYDRAULIC DISC BRAKE

	MERITOR NO.	REPLACES
HARDWARE KIT Services One Wheel 	**R4011121**	Meritor 1 69160483 (Anti-Rattle Spring) 1 69310818 (Bolt) 2 69310803 (Lining Spacer Bolt) 2 69330709 (Lining Spacer)
BOOT AND SEAL KIT 	**60050315**	**For Steel Piston** (Steel Piston No Longer Available as new service replacement) Meritor 4 69340642 (Boot) 4 69170337 (Seal) 4 69330714 (Boot Shield)
	R4011730	**For Phenolic Replacement Piston** 4 69170337 (Seal) 4 69340646 (Boot)
PHENOLIC CALIPER PISTON 70MM Dia	**60050334**	Meritor 60050334 or 69260549
D769 **OUTER AND INNER BRAKE PAD** 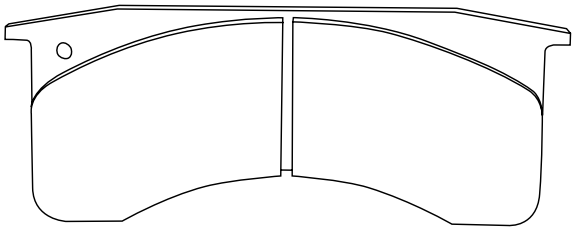	**KITD769AM** **KITD769GM** **MD769** **MMD769** **MVD769**	Meritor 69210823 60050314 FMSI 7636 **Note:** FMSI 7636D1032 is the same as 7636D769. The lining did not change. While the backing plates are the same dimension, the D1032 plate includes a lug used to attach a squealer tab required by some OEMs. The existing Meritor disc pads already meet this requirement.

4 x 70MM Quadraulic
Steel Piston
7/16"-24 Inlet Port

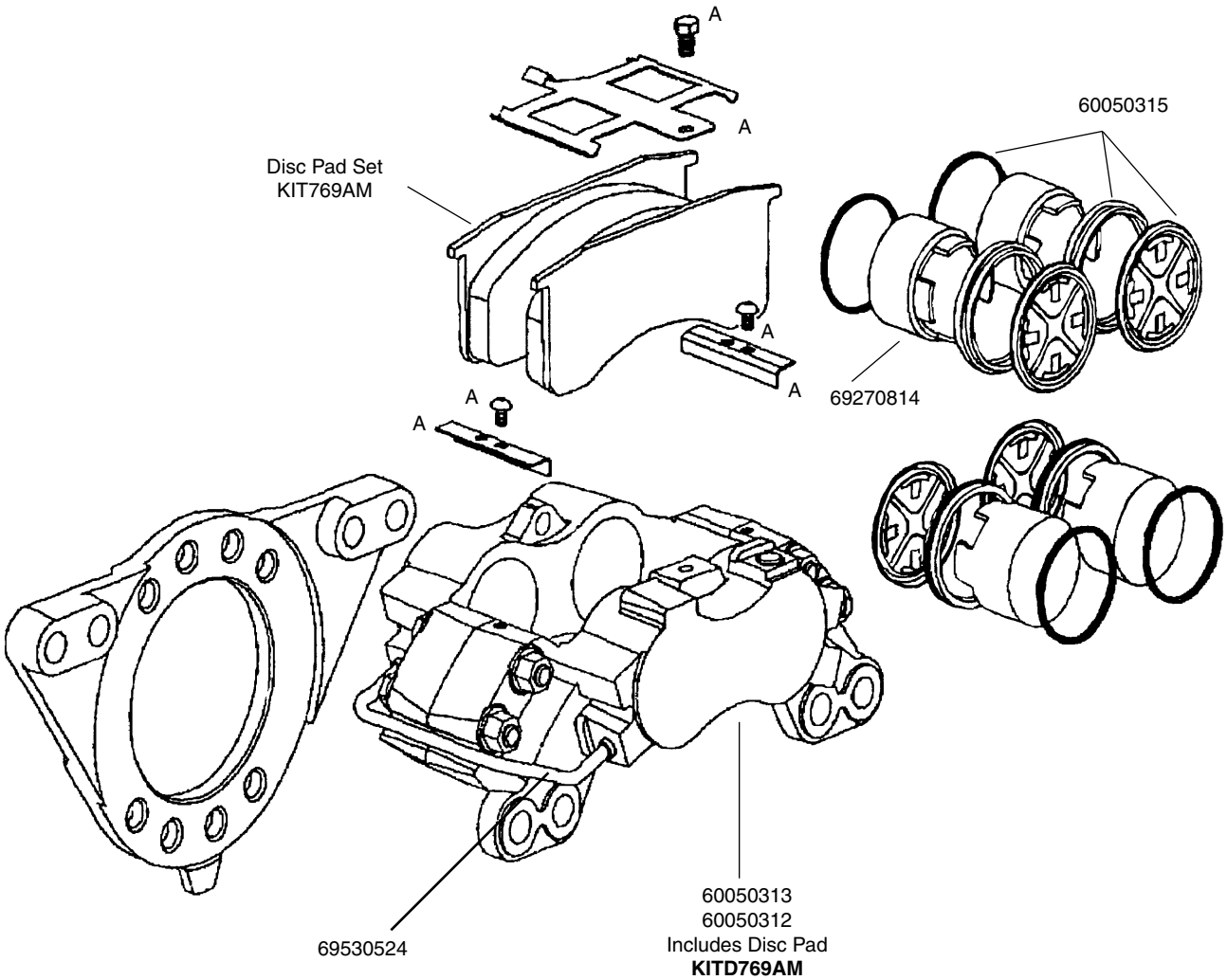

Note: See Meritor Qualdraulic Disc Brake ID Chart in the Calipers section, page 5-54, on how to ID.

A	**Contained in Hardware R4011121**

MERITOR HYDRAULIC DISC BRAKE

	MERITOR NO.	REPLACES
HARDWARE KIT Services One Wheel 	**R4011121**	Meritor 1 69160483 (Anti-Rattle Spring) 1 69310818 (Bolt) 2 69310803 (Lining Spacer Bolt) 2 69330709 (Lining Spacer)
BOOT AND SEAL KIT 	**60050315**	**For Steel Piston** (Steel Piston no longer available As new service replacement) Meritor 4 69340642 (Boot) 4 69170337 (Seal) 4 69330714 (Boot Shield)
	R4011730	For Phenolic Replacement Piston 4 69170337 (Seal) 4 69340646 (Boot)
PHENOLIC CALIPER PISTON 70MM Dia	**60050334**	Meritor 60050344 or 69260549
OUTER AND INNER BRAKE PAD **D769** 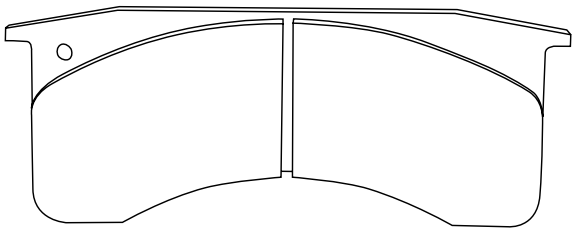	**KITD769AM** **KITD769GM** **MD769** **MMD769** **MVD769**	Meritor 69210823 60050314 FMSI 7636 **Note:** FMSI 7636D1032 is the same as 7636D769. The lining did not change. While the backing plates are the same dimension, the D1032 plate includes a lug used to attach a squealer tab required by some OEMs. The existing Meritor disc pads already meet this requirement.

NOTES

MERITOR®
an ArvinMeritor™ brand

Domestic Drum Brake Assemblies & Exploded Views and Reference Charts

Section 4

LIGHT-DUTY TRUCK DRUM BRAKE KIT PROGRAM

Meritor offers a full line of Hydraulic Drum Brake Hardware Kits for light-duty trucks and vans. For reference purposes, the illustrations below indicate the components found in a typical Meritor Drum Brake Kit.

Each Meritor Hold Down Kit contains enough parts to service one axle.

Each Meritor Adjuster Kit contains enough parts to service one wheel.

HOLD DOWN KITS

- **Kits contain all components needed to repair a single axle**
- **Replacement promotes longer lining life**

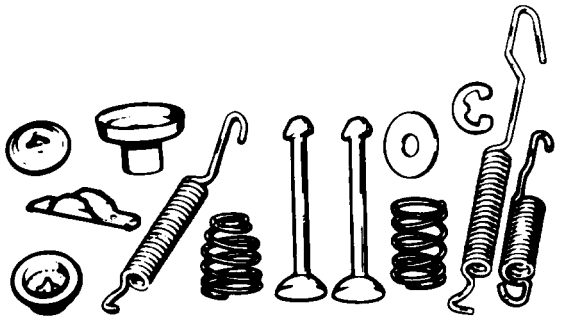

ADJUSTER KITS

- **Contains all parts needed to rebuild a self-adjusting mechanism**

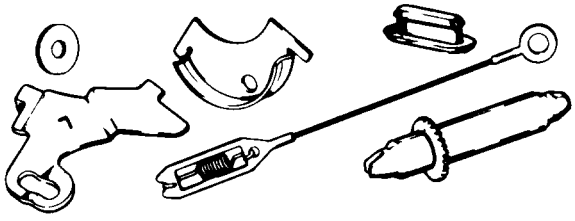

TYPICAL LIGHT-DUTY TRUCK DRUM BRAKE KIT

DRUM BRAKE PARTS IDENTIFICATION CHARTS

BENDIX TYPE

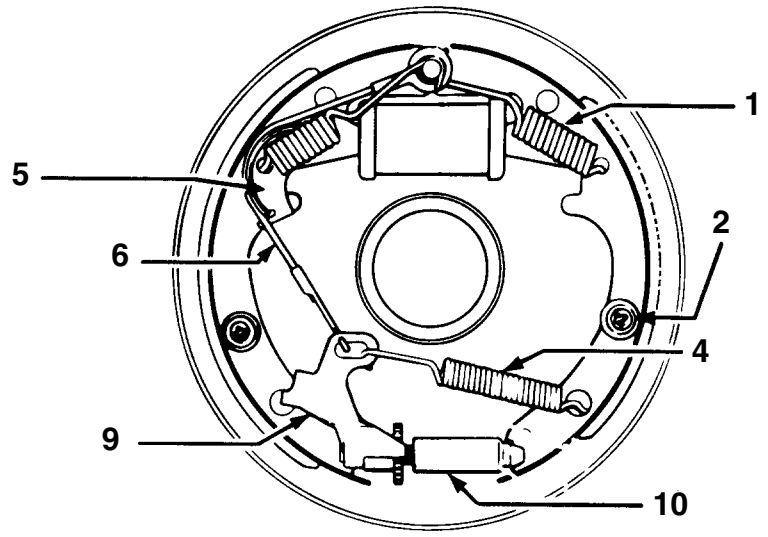

CHRYSLER TYPE

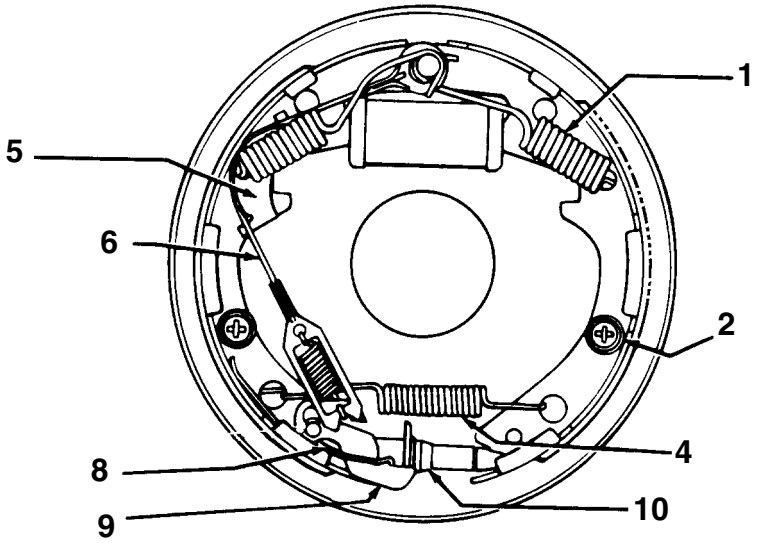

DELCO-MORAINE TYPE

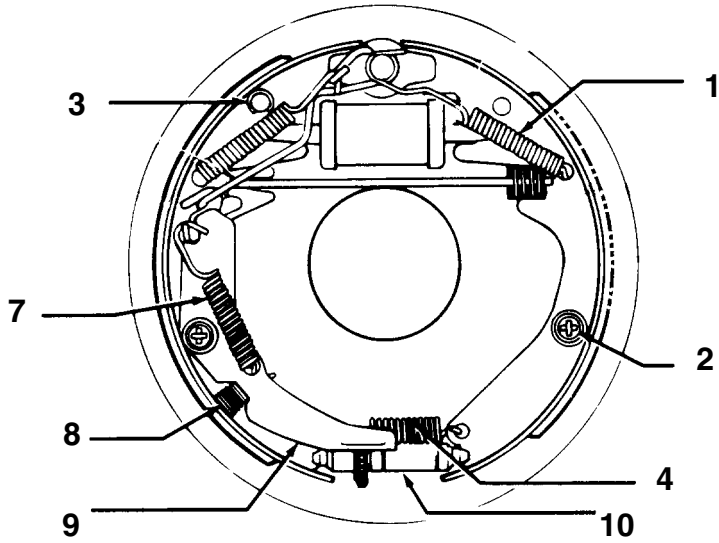

ITEM NO.	DESCRIPTION
Hold Down Kits	
1	Shoe Return Spring
2	Hold Down Assembly
3	"C" Washer or Pin Lock
Adjuster Kits	
4	Adjusting Screw Spring
5	Cable Guide
6	Self-Adjusting Cable
7	Over-Ride Spring
8	Lever Return Spring
9	Self-Adjusting Lever
10	Adjusting Screw Assembly

BENDIX (FORD) FRONT BRAKE 12" x 3"

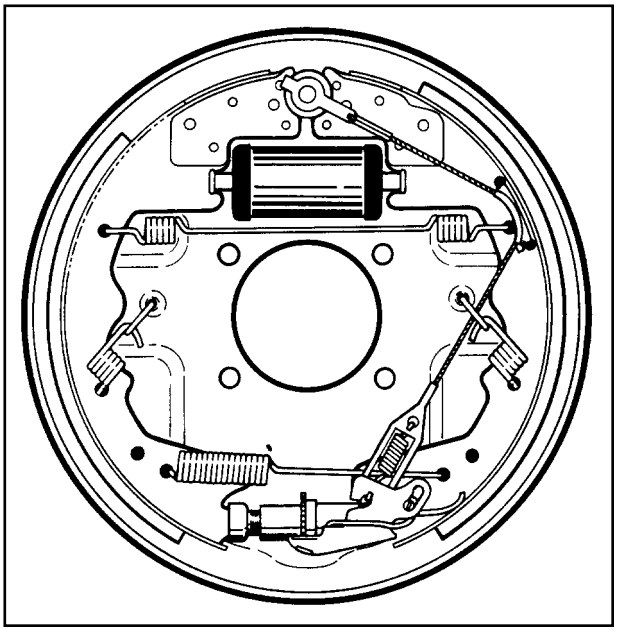

AUTOMATIC ADJUSTMENT

FMSI LINING	FMSI SHOE	BRAKE SIZE
2140AT	358	12" x 3"

(Old FMSI 314 is replaced by 358)

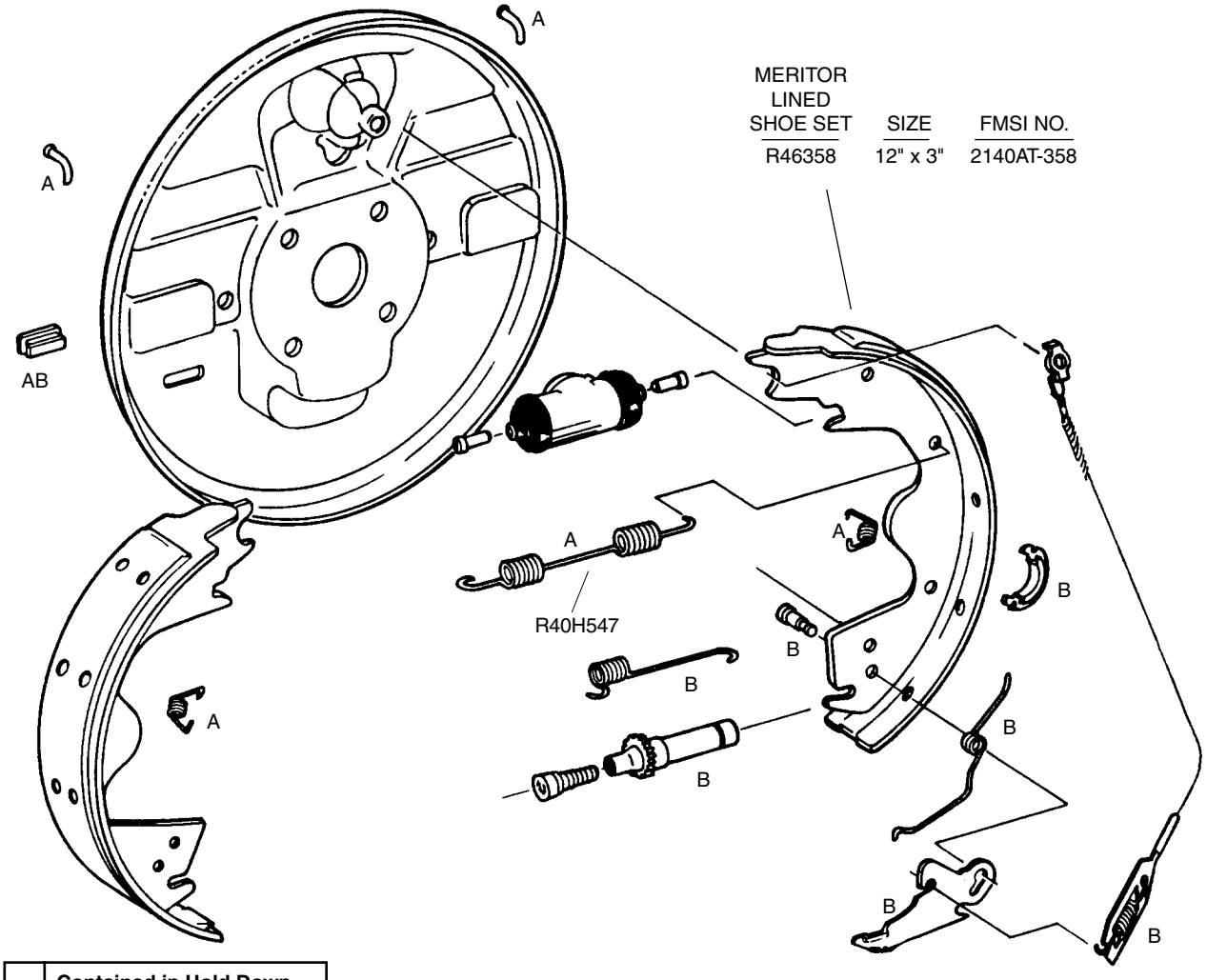

A	**Contained in Hold Down Kit R40H7145**
B	**Contained in Adjuster Kit R40H2598 LH R40H2599 RH**

For Wheel Cylinder Applications see Vehicle Application Guide, beginning in Section 1

BENDIX (FORD) FRONT BRAKE 12" x 3"

APPLICATION		KIT NUMBER
RETURN SPRING KIT **for** **BENDIX 12" x 3"** **Automatic Adjustment Front Brake** Services One Axle		**MERITOR KIT R40H547** Replaces Bendix H547
HOLD DOWN KIT **for** **BENDIX 12" x 3"** **Automatic Adjustment Front Brake** Services One Wheel		**MERITOR KIT R40H7145** Replaces (1/2) Bendix H7145
AUTOMATIC ADJUSTER KIT RH **for** **BENDIX 12" x 3"** **Automatic Adjustment Front Brake** Services One Wheel		**MERITOR KIT R40H2599** (RH) Replaces Bendix H2599
AUTOMATIC ADJUSTER KIT LH **for** **BENDIX 12" x 3"** **Automatic Adjustment Front Brake** Services One Wheel	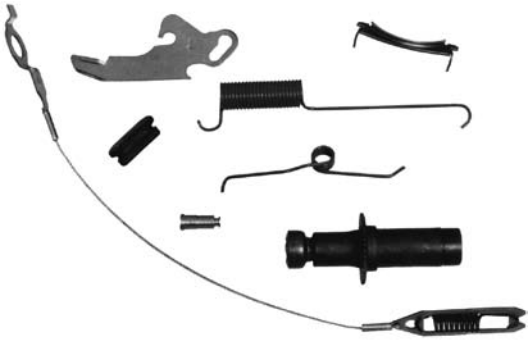	**MERITOR KIT R40H2598** (LH) Replaces Bendix H2598

BENDIX FRONT BRAKE 13" x 2 1/4", 14" x 2 1/4"

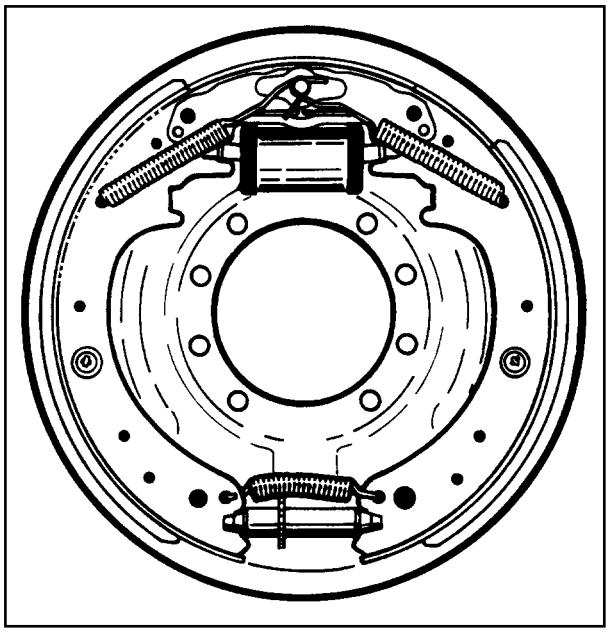

MANUAL ADJUSTMENT

FMSI LINING	FMSI SHOE	BRAKE SIZE
2043	36	13" x 2 1/4"
224A	63	14" x 2 1/4"

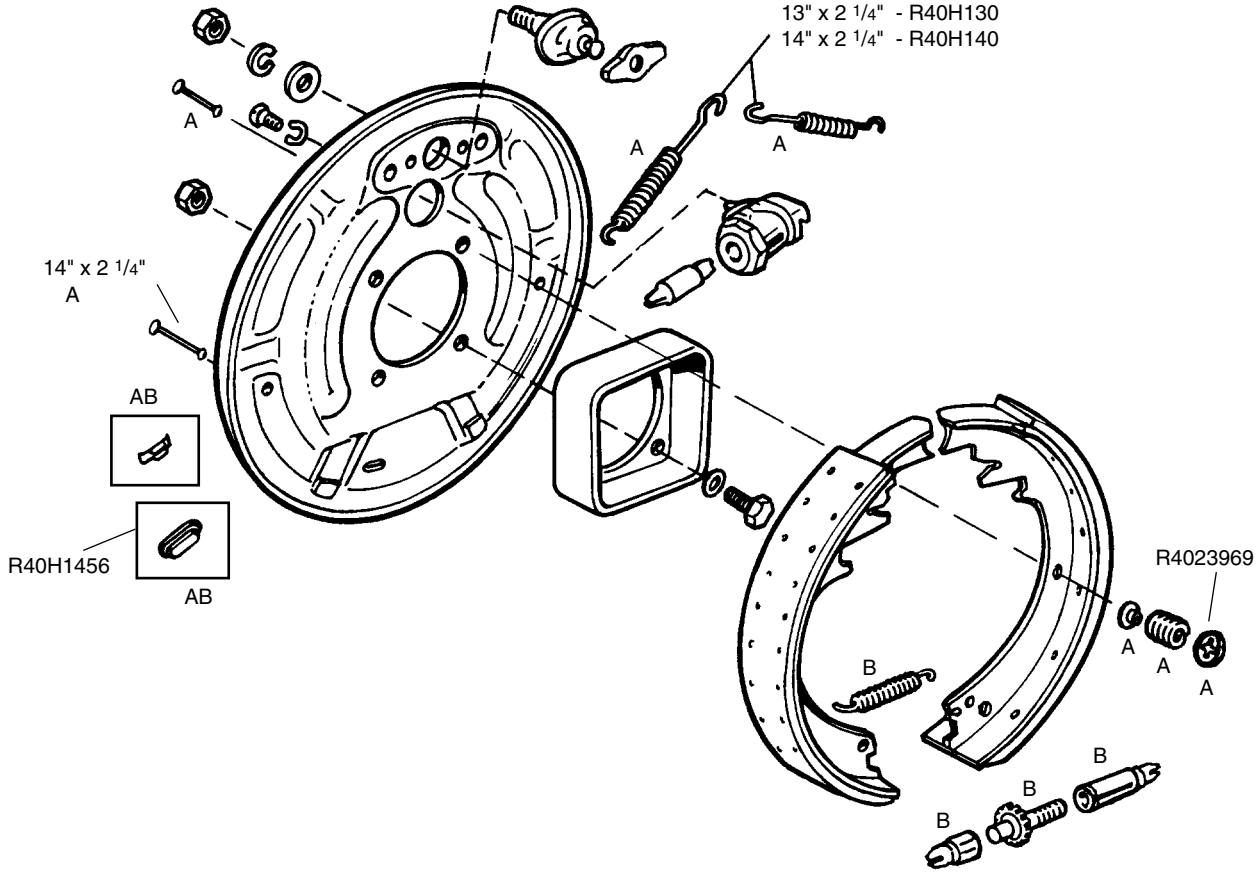

A	**Contained in Hold Down Kit 14" x 2 1/4" R40H9207**
B	**Contained in Adjuster Kit Both Assemblies R40H3514**

For Wheel Cylinder Applications see Vehicle Application Guide, beginning in Section 1

BENDIX FRONT BRAKE 13" x 2 1/4", 14" x 2 1/4"

APPLICATION		KIT NUMBER
RETURN SPRING KIT **for** **BENDIX 13" x 2 1/4", 14" x 2 1/4"** **Manual Adjustment Front Brake** Services One Axle		**MERITOR KIT R40H140** Replaces Bendix H140 6 1/4" Long Blue **MERITOR KIT R40H130** Replaces Bendix H130 5 1/8" Long Orange
HOLD DOWN KIT **for** **BENDIX 13" x 2 1/4", 14" x 2 1/4"** **Manual Adjustment Front Brake** Services One Wheel		**MERITOR KIT R40H9207** Replaces (1/2) Bendix H9207
MANUAL ADJUSTER KIT **for** **BENDIX 13" x 2 1/4", 14" x 2 1/4"** **Manual Adjustment Front Brake** Services One Wheel		**MERITOR KIT R40H3514** Replaces Bendix H3514

BENDIX FRONT BRAKE 14" x 2 1/2"

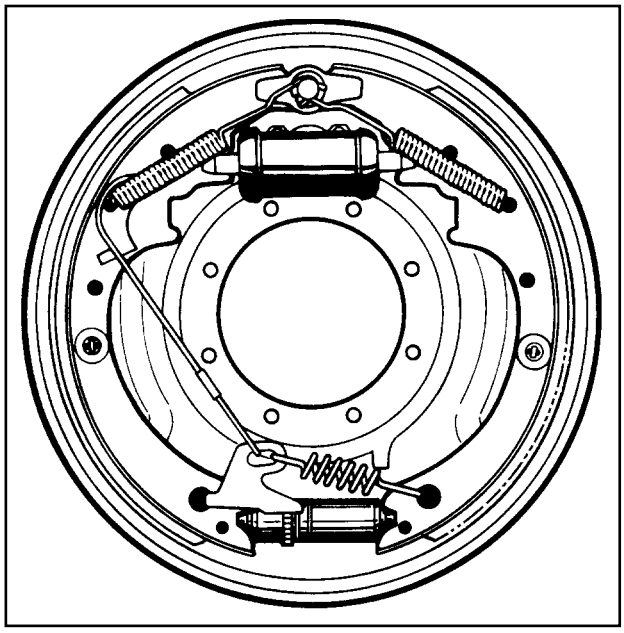

AUTOMATIC ADJUSTMENT

FMSI LINING	FMSI SHOE	BRAKE SIZE
2060	398	14" x 2 1/2"

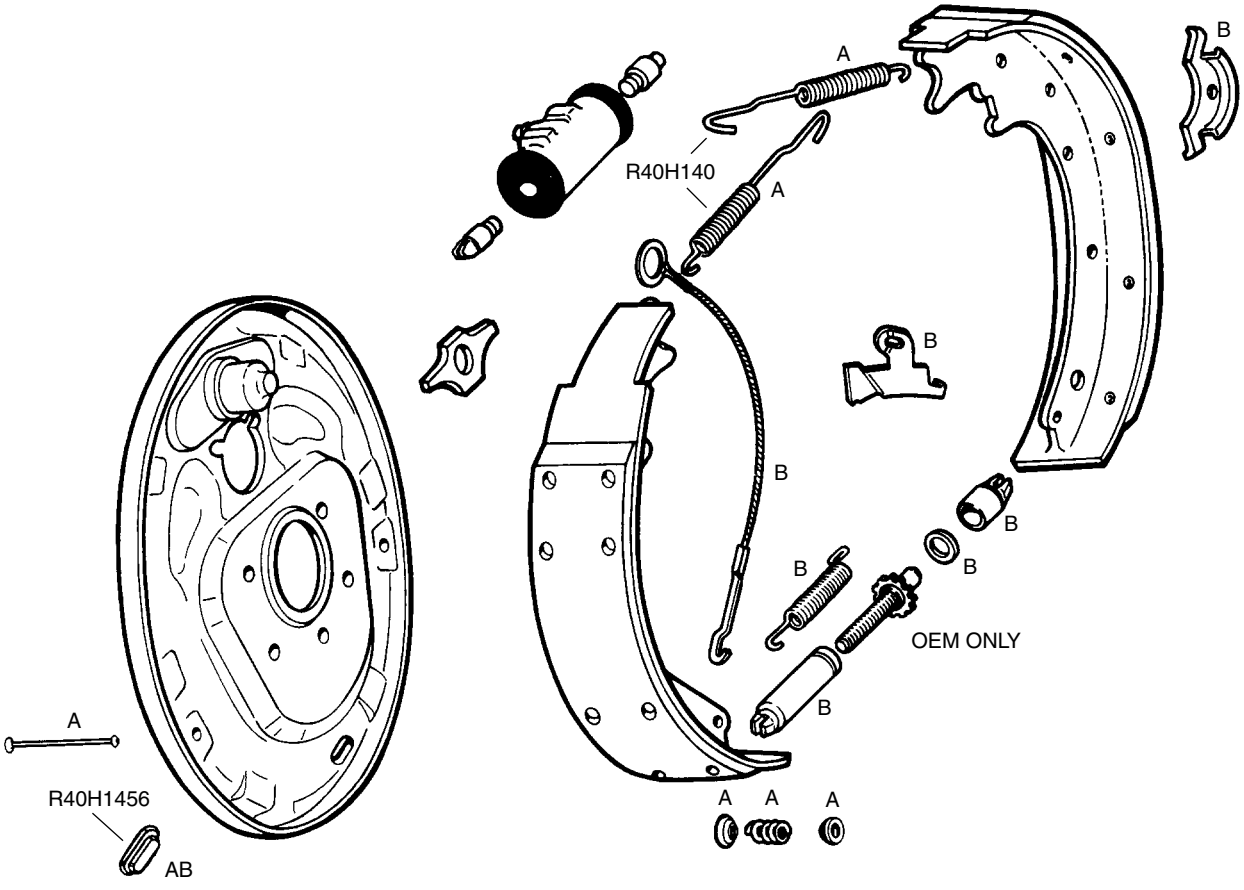

A	**Contained in Hold Down Kit R40H9204**
B	**Contained in Adjuster Kit R40H3556 LH R40H3557 RH**

For Wheel Cylinder Applications see Vehicle Application Guide, beginning in Section 1.

BENDIX FRONT BRAKE 14" x 2 1/2"

APPLICATION		KIT NUMBER
RETURN SPRING KIT **for** **BENDIX 14" x 2 1/2"** **Automatic Adjustment Front Brake** Services One Axle		**MERITOR KIT R40H140** Replaces Bendix H140 6 1/4" Long Blue
HOLD DOWN KIT **for** **BENDIX 14" x 2 1/2"** **Automatic Adjustment Front Brake** Services One Wheel	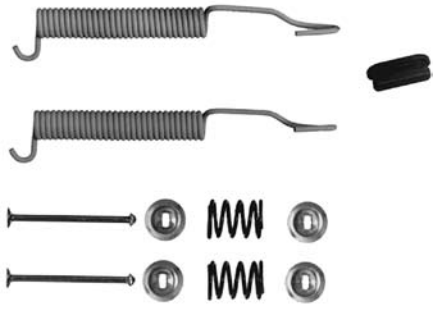	**MERITOR KIT R40H9204** Replaces (1/2) Bendix H9204
AUTOMATIC ADJUSTER KIT RH **for** **BENDIX 14" x 2 1/2"** **Automatic Adjustment Front Brake** Services One Wheel		**MERITOR KIT R40H3557** (RH) Replaces Bendix H3557
AUTOMATIC ADJUSTER KIT LH **for** **BENDIX 14" x 2 1/2"** **Automatic Adjustment Front Brake** Services One Wheel	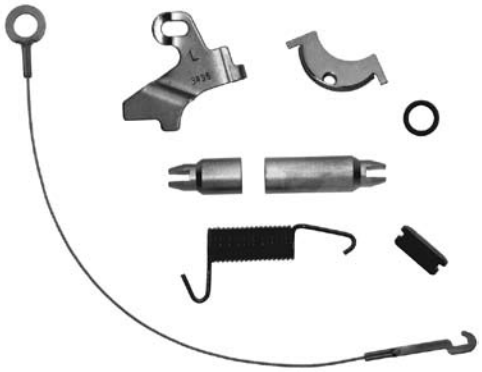	**MERITOR KIT R40H3556** (LH) Replaces Bendix H3556

BENDIX (FORD) REAR BRAKE 12" x 2 1/2", 12" x 3"

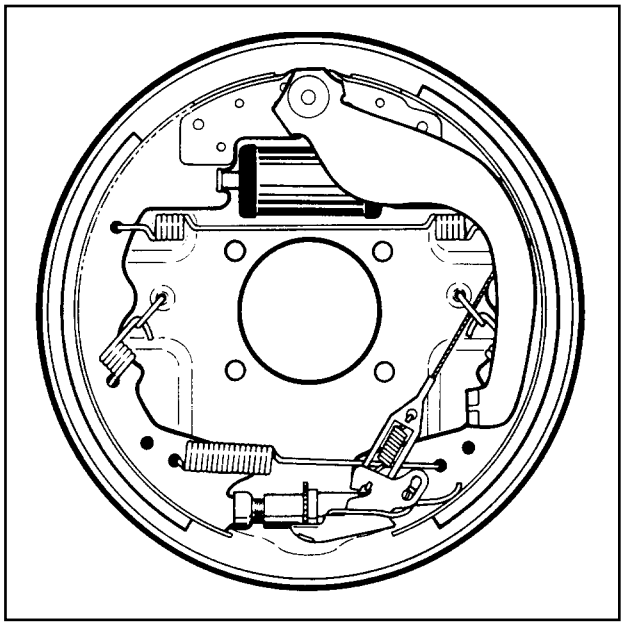

AUTOMATIC ADJUSTMENT

FMSI LINING	FMSI SHOE	BRAKE SIZE
2146T	316	12" x 2 1/2"
2146AT	316	12" x 2 1/2"
2140AT	358	12" x 3"

(Old FMSI 314 is replaced by 358)

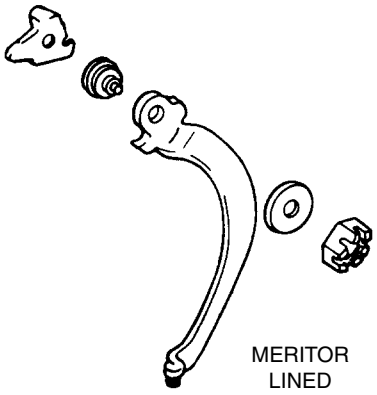

MERITOR LINED SHOE SET	SIZE	FMSI NO.
R46358	12" x 3"	2140AT-358

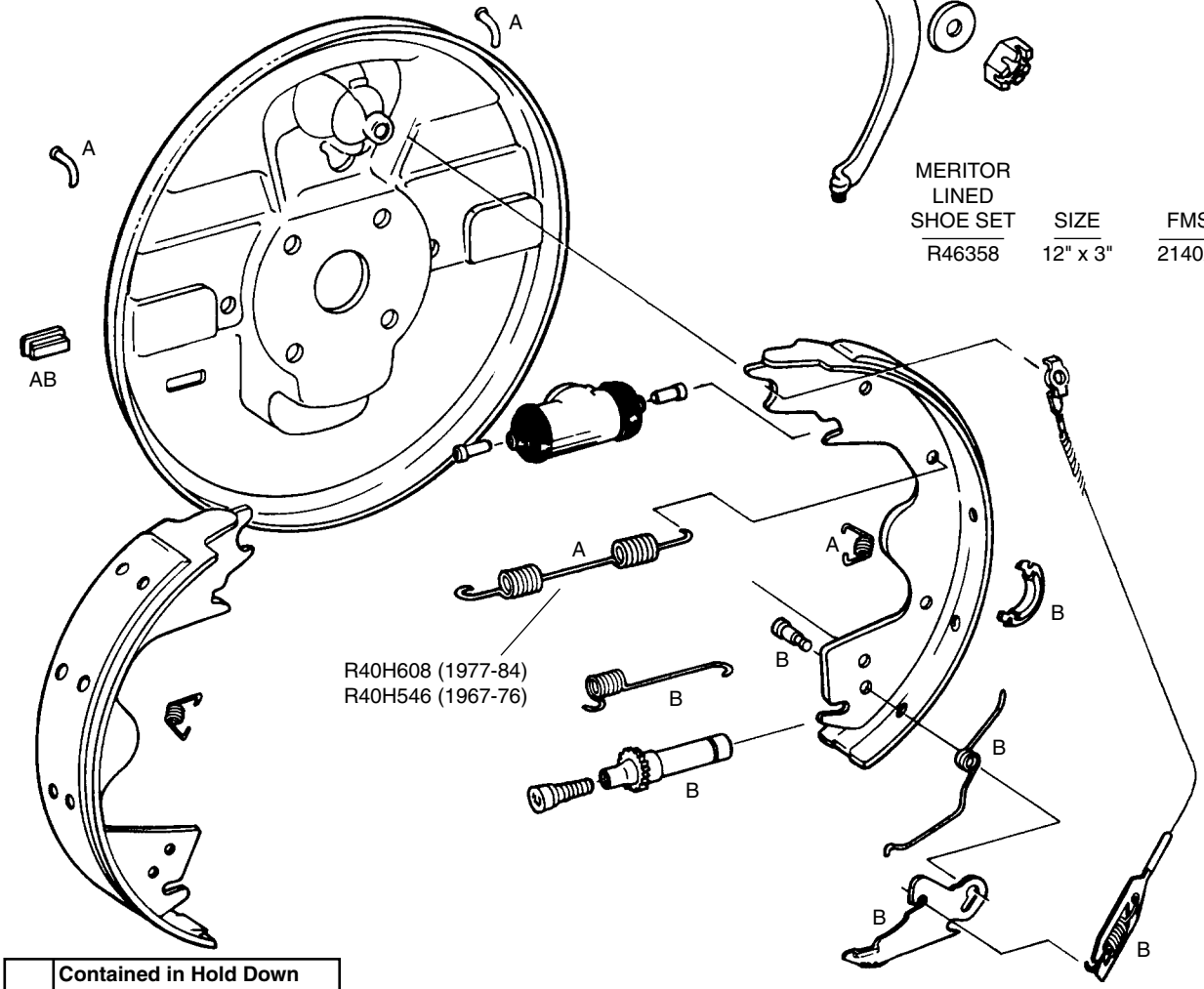

A	**Contained in Hold Down Kit R40H7181 (1977-84) R40H7146 (1967-76)**
B	**Contained in Adjuster Kit R40H2598 LH R40H2599 RH**

For Wheel Cylinder Applications see Vehicle Application Guide, beginning in Section 1.

BENDIX (FORD) REAR BRAKE 12" x 2 1/2", 12" x 3"

APPLICATION		KIT NUMBER
RETURN SPRING KIT **for** **BENDIX 12" x 2 1/2", 12" x 3"** **Automatic Adjustment Rear Brake** Services One Axle	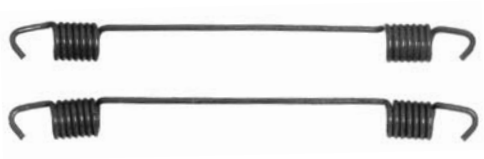	**MERITOR KIT R40H608** 1977-1984 Replaces Bendix H608
		MERITOR KIT R40H546 1967-1976 Replaces Bendix H546
HOLD DOWN KIT **for** **BENDIX 12" x 2 1/2", 12" x 3"** **Automatic Adjustment Rear Brake** Services One Wheel		**MERITOR KIT R40H7181** 1977 -1984 Replaces (1/2) Bendix H7181 For 12" x 3"
		MERITOR KIT R40H7146 1967-1976 Replaces (1/2) Bendix H7146 For 12" x 2 1/2"
AUTOMATIC ADJUSTER KIT RH **for** **BENDIX 12" x 2 1/2", 12" x 3"** **Automatic Adjustment Rear Brake** Services One Wheel		**MERITOR KIT R40H2599** (RH) 1967-1984 Replaces Bendix H2599
AUTOMATIC ADJUSTER KIT LH **for** **BENDIX 12" x 2 1/2", 12" x 3"** **Automatic Adjustment Rear Brake** Services One Wheel	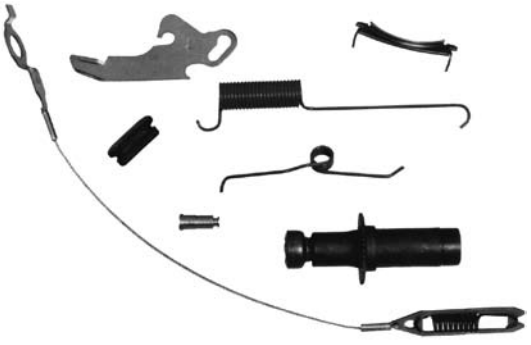	**MERITOR KIT R40H2598** (LH) 1967-1984 Replaces Bendix H2598

BENDIX REAR BRAKE 14 1/8" x 3 1/2", 15" x 4"

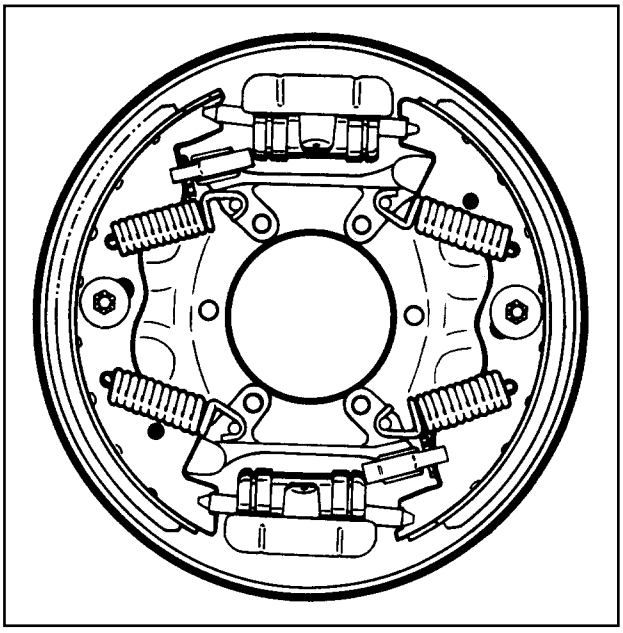

MANUAL ADJUSTMENT

FMSI LINING	FMSI SHOE	BRAKE SIZE
2041	22	14 1/8" x 3 1/2"
2032	402	15" x 4"

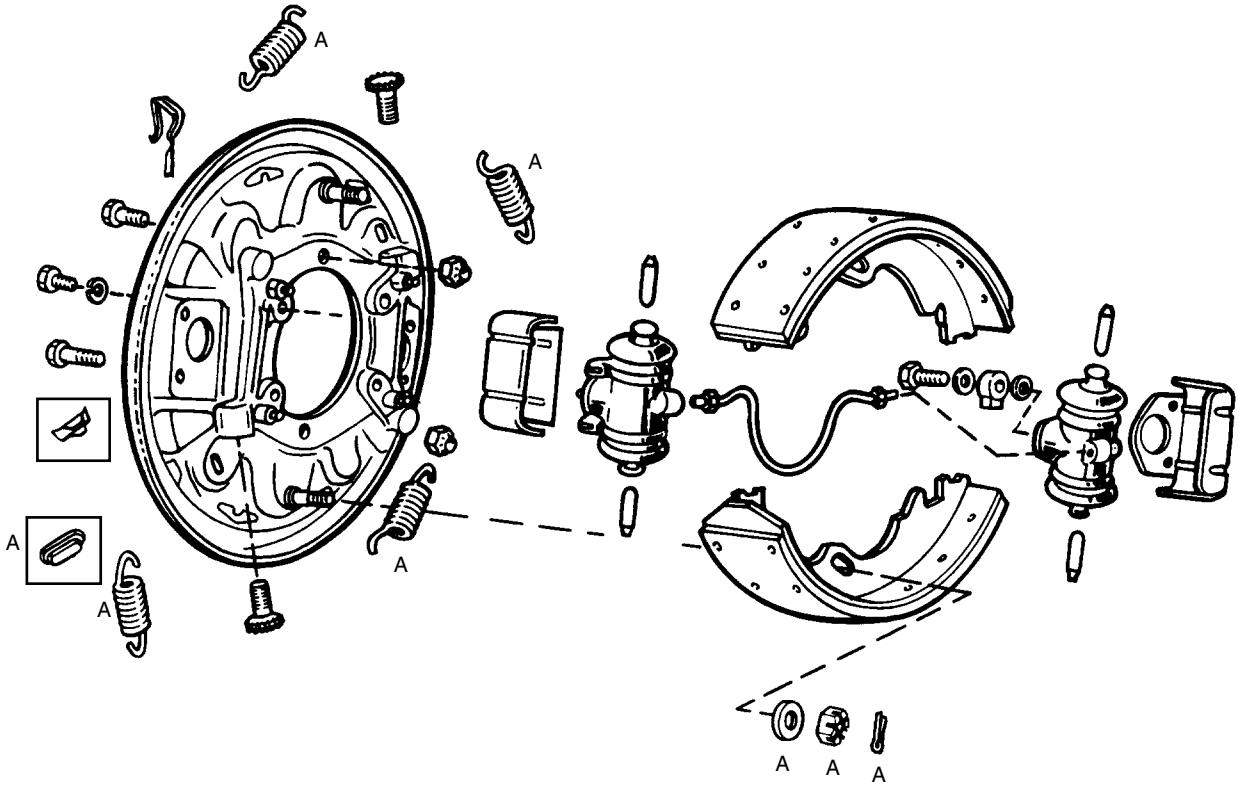

A	**Contained in Hold Down Kit R40H9224**

For Wheel Cylinder Applications see Vehicle Application Guide, beginning in Section 1.

BENDIX REAR BRAKE 14 1/8" x 3 1/2", 15" x 4"

APPLICATION		KIT NUMBER
HOLD DOWN KIT **for** **BENDIX 14 1/8" x 3 1/2", 15" x 4"** **Manual Adjustment Rear Brake** Services One Wheel		**MERITOR KIT R40H9224** Replaces (1/2) Bendix H9224

BENDIX REAR BRAKE 15" x 4"

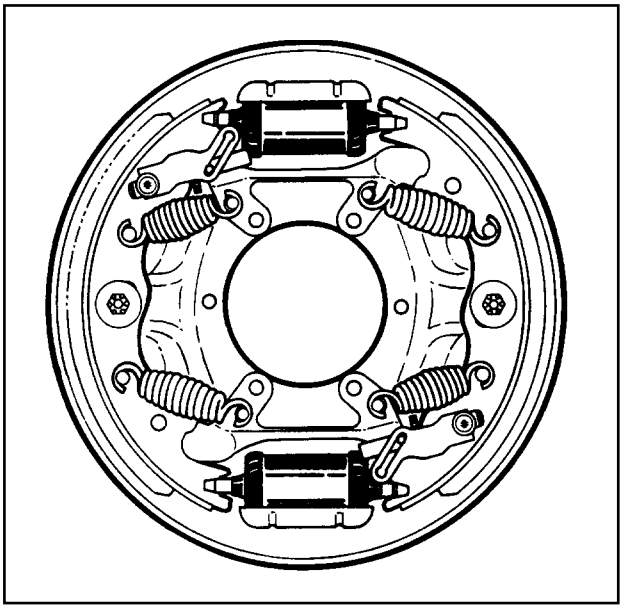

AUTOMATIC ADJUSTMENT

FMSI LINING	FMSI SHOE	BRAKE SIZE
2032	402	15" x 4"

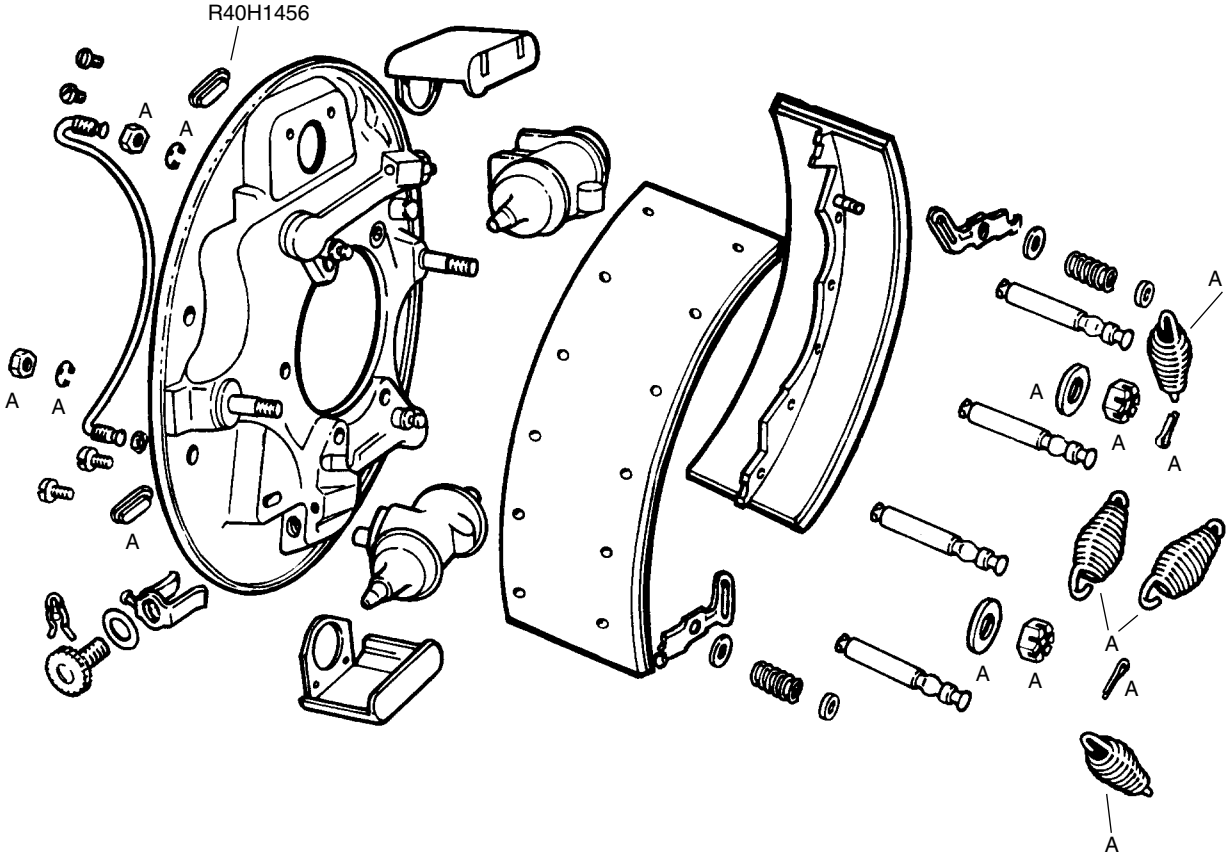

A	**Contained in Hold Down Kit R40H9223**

For Wheel Cylinder Applications see Vehicle Application Guide, beginning in Section 1.

BENDIX REAR BRAKE 15" x 4"

APPLICATION		KIT NUMBER
HOLD DOWN KIT **for** **BENDIX 15" x 4"** **Automatic Adjustment Rear Brake** Services One Wheel	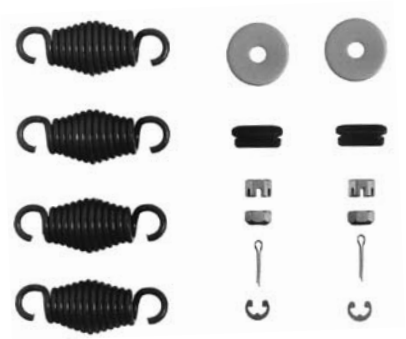	**MERITOR KIT R40H9223** Replaces (1/2) Bendix H9223

GENERAL MOTORS REAR BRAKE 13" x 3 1/2"

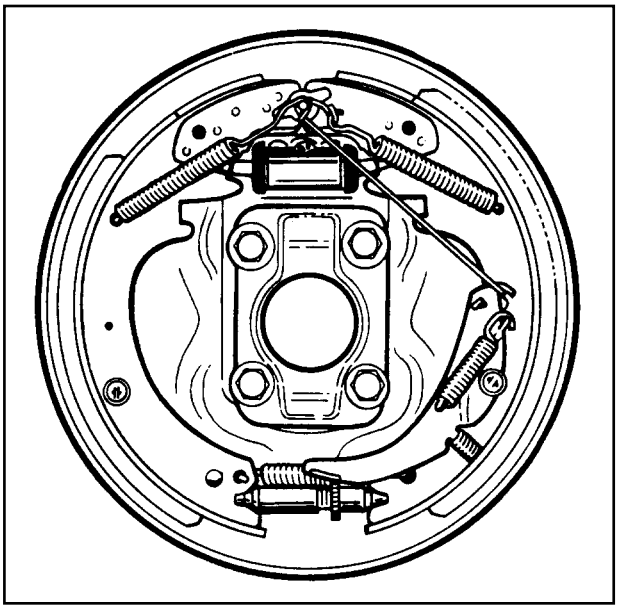

AUTOMATIC ADJUSTMENT

FMSI LINING	FMSI SHOE	BRAKE SIZE
2157T	452	13" x 3 1/2"

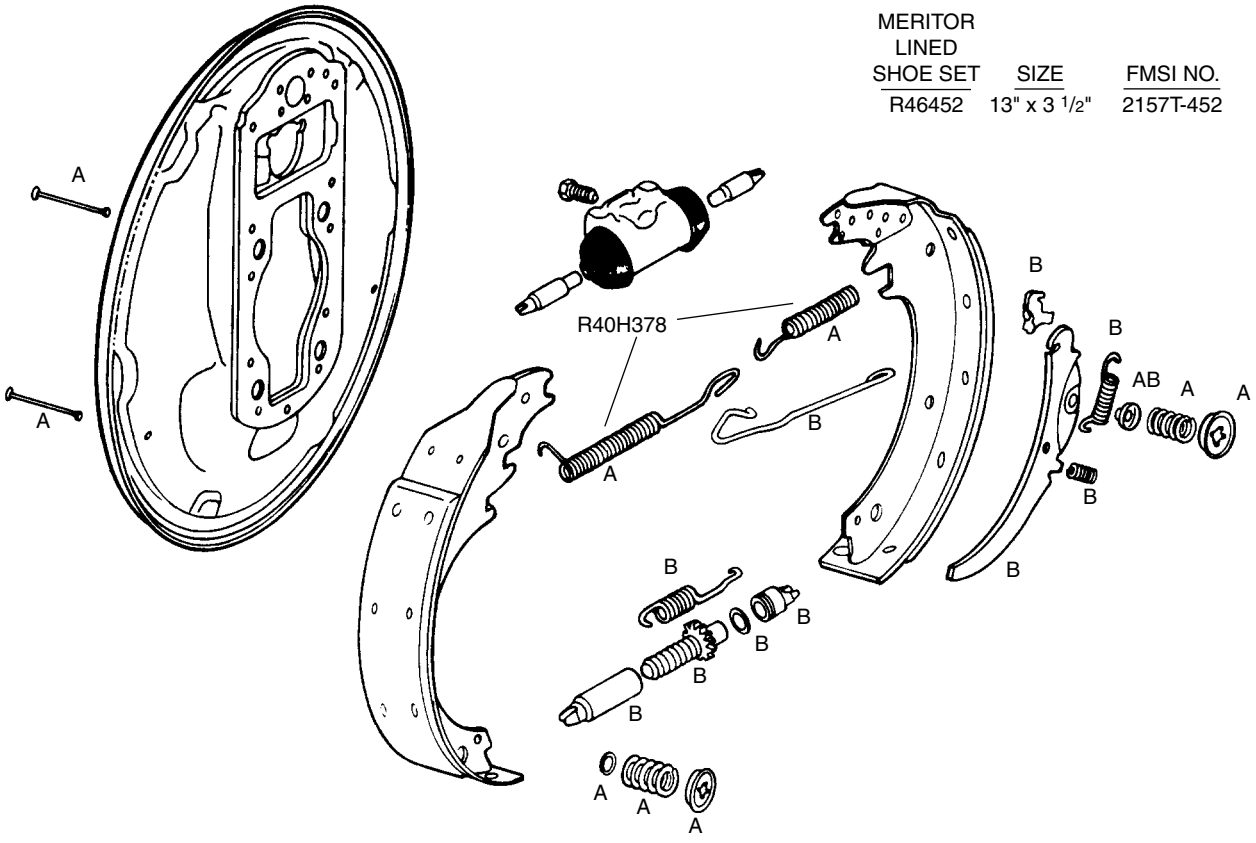

MERITOR LINED SHOE SET	SIZE	FMSI NO.
R46452	13" x 3 1/2"	2157T-452

A	**Contained in Hold Down Kit R40H7055**
B	**Contained in Adjuster Kit R40H2588 LH R40H2589 RH**

For Wheel Cylinder Applications see Vehicle Application Guide, Section 1

GENERAL MOTORS REAR BRAKE 13" x 3 1/2"

APPLICATION		KIT NUMBER
RETURN SPRING KIT **for** **GENERAL MOTORS 13" x 3 1/2"** **Automatic Adjustment Rear Brake** Services One Axle		**MERITOR KIT R40H378**
HOLD DOWN KIT **for** **GENERAL MOTORS 13" x 3 1/2"** **Automatic Adjustment Rear Brake** Services One Wheel		**MERITOR KIT R40H7055**
AUTOMATIC ADJUSTER KIT RH **for** **GENERAL MOTORS 13" x 3 1/2"** **Automatic Adjustment Rear Brake** Services One Wheel		**MERITOR KIT R40H2589** (RH)
AUTOMATIC ADJUSTER KIT LH **for** **GENERAL MOTORS 13" x 3 1/2"** **Automatic Adjustment Rear Brake** Services One Wheel		**MERITOR KIT R40H2588** (LH)

GENERAL MOTORS FRONT BRAKE 14" x 2 1/2"

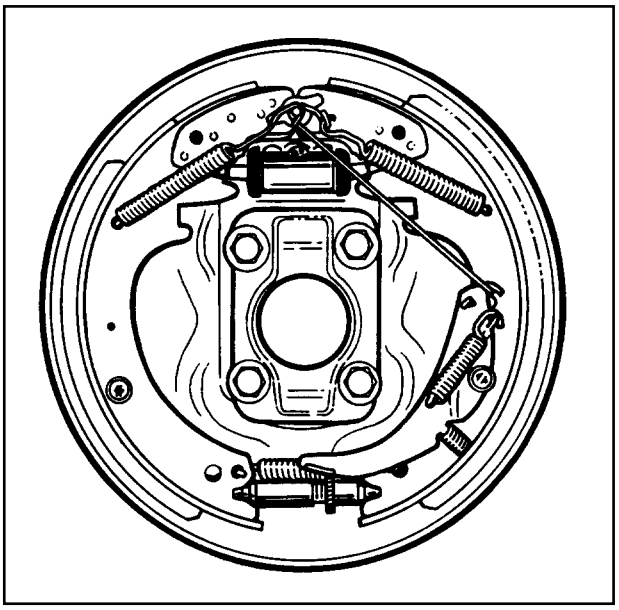

AUTOMATIC ADJUSTMENT

FMSI LINING	FMSI SHOE	BRAKE SIZE
2039	299	14" x 2 1/2"

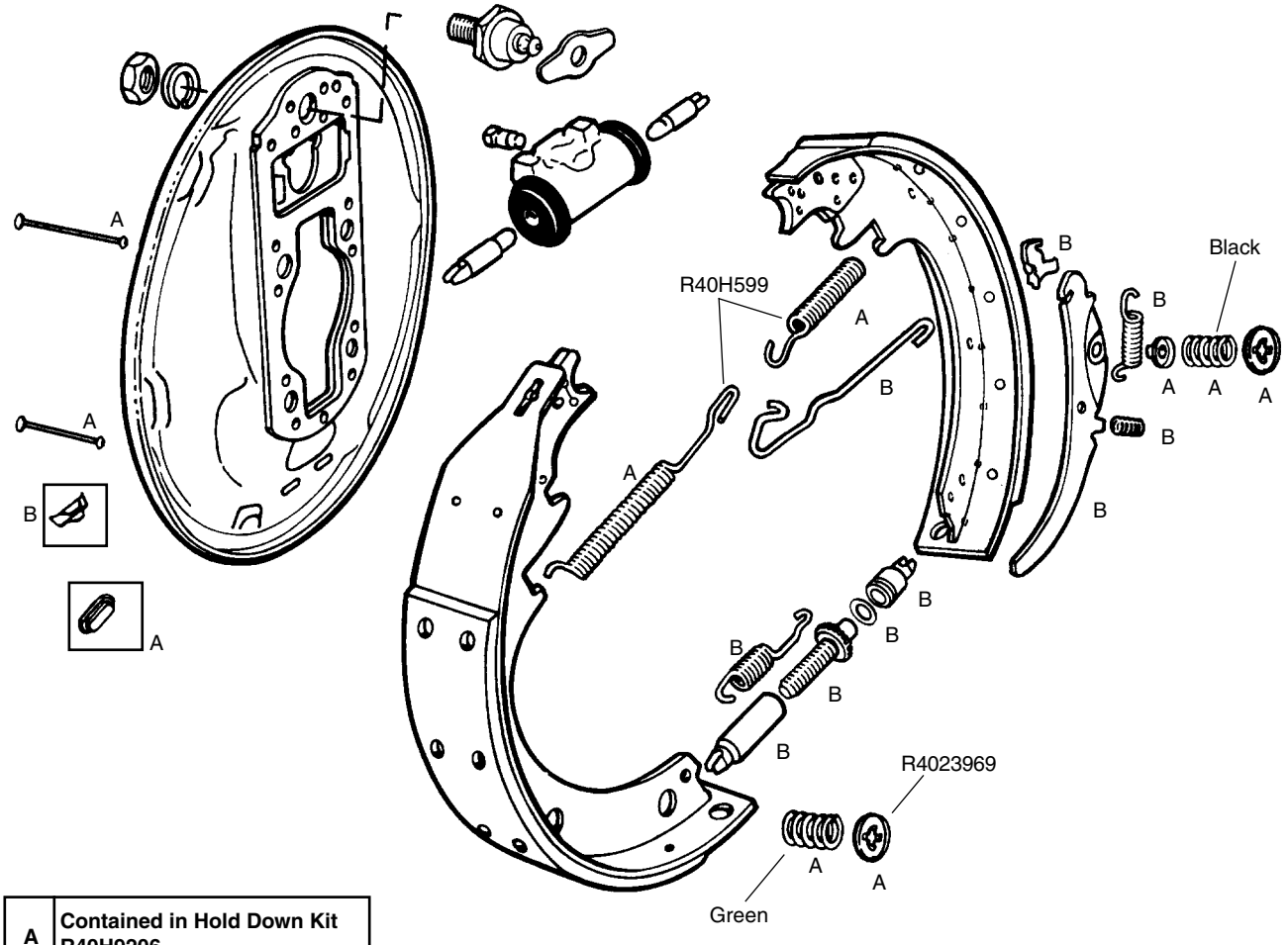

A	**Contained in Hold Down Kit R40H9206**
B	**Contained in Adjuster Kit R40H3500 LH R40H3501 RH**

For Wheel Cylinder Applications see Vehicle Application Guide, beginning in Section 1.

GENERAL MOTORS FRONT BRAKE 14" x 2 1/2"

APPLICATION		KIT NUMBER
RETURN SPRING KIT **for** **GENERAL MOTORS 14" x 2 1/2"** **Automatic** **Adjustment** **Front Brake** Services One Axle	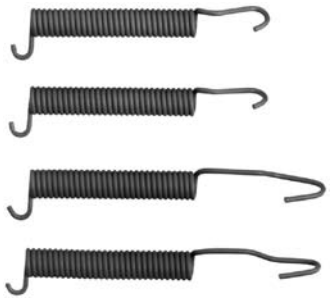	**MERITOR KIT R40H599** Replaces General Motors 1416653 5 1/16" Long 6 1/8" Long
BRAKE SHOE **HOLD DOWN KIT** **for** **GENERAL MOTORS 14" x 2 1/2"** **Automatic** **Adjustment** **Front Brake** Services One Wheel	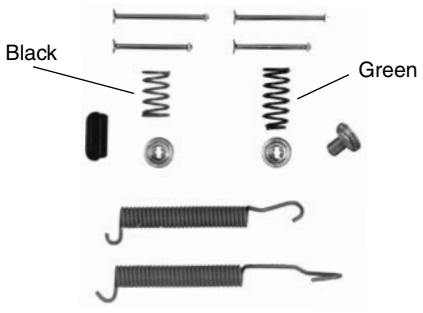	**MERITOR KIT R40H9206** Replaces General Motors 94020711 412685 5459446 1416653
AUTOMATIC ADJUSTER KIT **LH** **for** **GENERAL MOTORS 14" x 2 1/2"** **Automatic** **Adjustment** **Front Brake** Services One Wheel	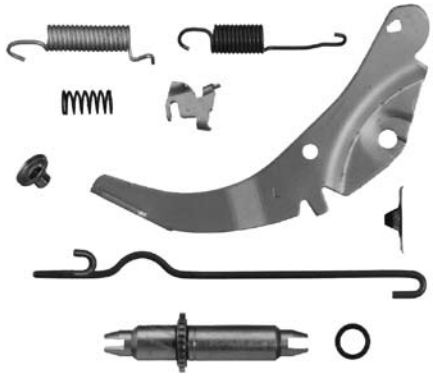	**MERITOR KIT R40H3500** (LH) Replaces General Motors 334303 3873517 3856847
AUTOMATIC ADJUSTER KIT **RH** **for** **GENERAL MOTORS 14" x 2 1/2"** **Automatic** **Adjustment** **Front Brake** Services One Wheel		**MERITOR KIT R40H3501** (RH) Replaces General Motors 334304 3873518 3856848

GENERAL MOTORS REAR BRAKE 15" x 4", 15" x 5"

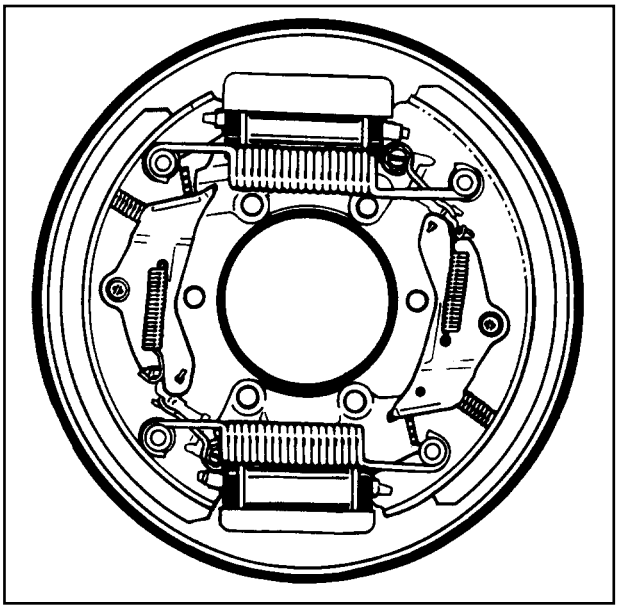

AUTOMATIC ADJUSTMENT

FMSI LINING	FMSI SHOE	BRAKE SIZE
4640	427	15" x 4"
4639	442	15" x 5"

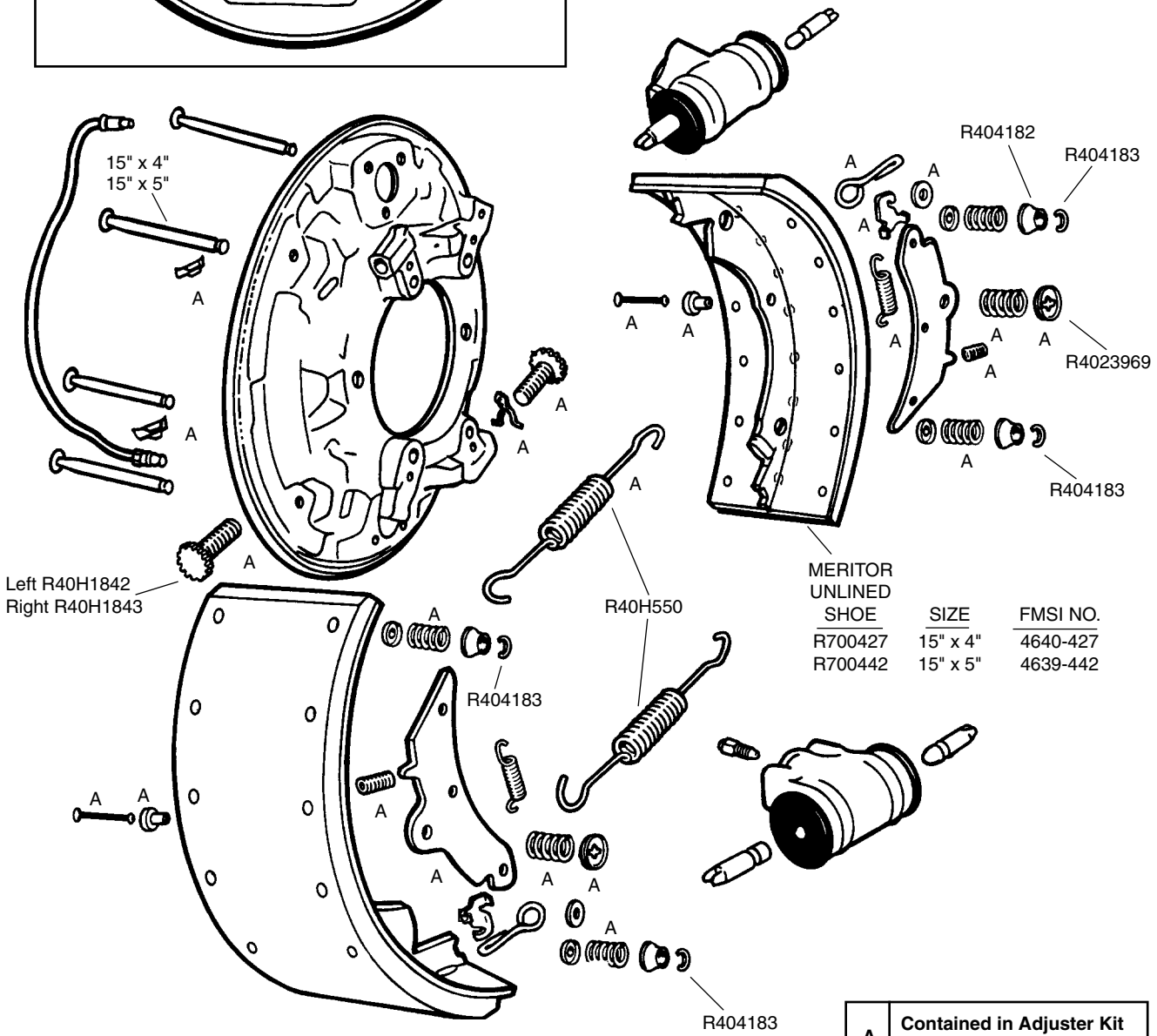

A	**Contained in Adjuster Kit R40H3510 LH R40H3511 RH**

For Wheel Cylinder Applications see Vehicle Application Guide, Section 1

GENERAL MOTORS REAR BRAKE 15" x 4", 15" x 5"

APPLICATION		KIT NUMBER
RETURN SPRING KIT **for** **GENERAL MOTORS** **15" x 4", 15" x 5"** **Automatic** **Adjustment** **Rear Brake** Services One Axle	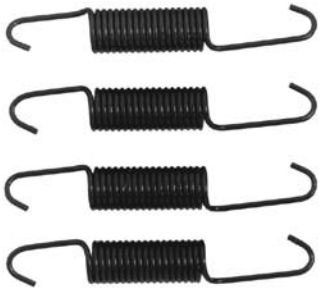	**MERITOR KIT R40H550** Replaces General Motors 341520 8 3/4" Long Black
AUTOMATIC ADJUSTER KIT **RH** **for** **GENERAL MOTORS** **15" x 4", 15" x 5"** **Automatic** **Adjustment** **Rear Brake** Services One Wheel	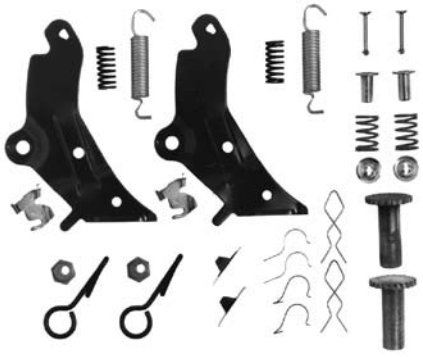	**MERITOR KIT R40H3511** (RH) Replaces General Motors 3987476 3987462 **Kit Includes** **R40H1843** Adjusting Screw (New Style)
AUTOMATIC ADJUSTER KIT **LH** **for** **GENERAL MOTORS** **15" x 4", 15" x 5"** **Automatic** **Adjustment** **Rear Brake** Services One Wheel	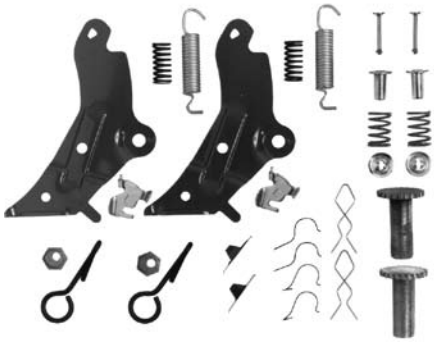	**MERITOR KIT R40H3510** (LH) Replaces General Motors 3987475 3987461 **Kit Includes** **R40H1842** Adjusting Screw (New Style)
HOLD DOWN PIN		

MERITOR NO.	BRAKE	LENGTH
R404032	15" x 4"	4"
R404033	15" x 5"	4 1/2"

GUNITE (KELSEY-HAYES) FRONT BRAKE 14" x 2 1/2"

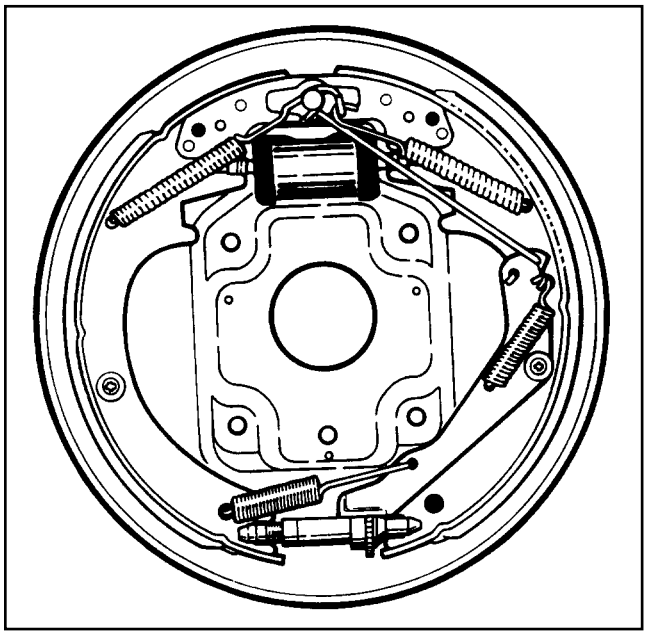

AUTOMATIC ADJUSTMENT

FMSI LINING	FMSI SHOE	BRAKE SIZE
2060 or 2060T	361	14" x 2 1/2"

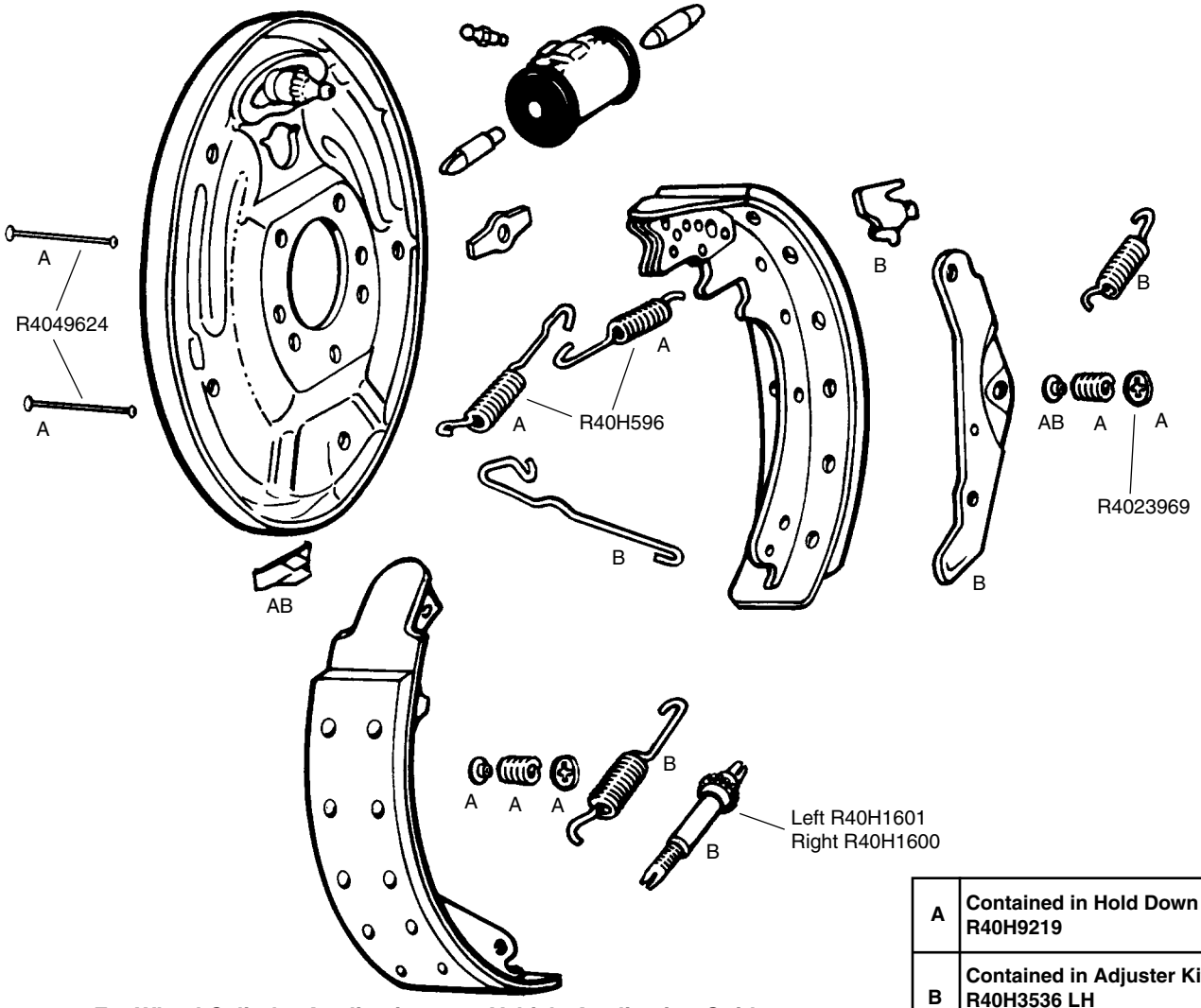

A	**Contained in Hold Down Kit R40H9219**
B	**Contained in Adjuster Kit R40H3536 LH R40H3537 RH**

For Wheel Cylinder Applications see Vehicle Application Guide, Section 1

GUNITE (KELSEY-HAYES) FRONT BRAKE 14" x 2 1/2"

APPLICATION		KIT NUMBER
RETURN SPRING KIT **for** **GUNITE (KELSEY-HAYES)** **14" x 2 1/2"** **Automatic** **Adjustment** **Front Brake** Services One Axle		**MERITOR KIT R40H596** Replaces Gunite (Kelsey-Hayes) 7033, 7034 5 9/16" Long Gray 6 1/8" Long Blue
HOLD DOWN KIT **for** **GUNITE (KELSEY-HAYES)** **14" x 2 1/2"** **Automatic** **Adjustment** **Front Brake** Services One Wheel		**MERITOR KIT R40H9219** Replaces Gunite (Kelsey-Hayes) 7038
AUTOMATIC ADJUSTER KIT **RH** **for** **GUNITE (KELSEY-HAYES)** **14" x 2 1/2"** **Automatic** **Adjustment** **Front Brake** Services One Wheel		**MERITOR KIT R40H3537** (RH) Replaces Gunite (Kelsey-Hayes) 7033, 7036
AUTOMATIC ADJUSTER KIT **LH** **for** **GUNITE (KELSEY-HAYES)** **14" x 2 1/2"** **Automatic** **Adjustment** **Front Brake** Services One Wheel		**MERITOR KIT R40H3536** (LH) Replaces Gunite (Kelsey-Hayes) 7034, 7037
ADJUSTING SCREW **for** **GUNITE (KELSEY-HAYES)** **14" x 2 1/2"** **Automatic** **Adjustment** **Front Brake**		**R40H1600** (RH) Replaces Gunite (Kelsey-Hayes) 7044 **R40H1601** (LH) Replaces Gunite (Kelsey-Hayes) 7045

GUNITE (KELSEY-HAYES) REAR BRAKE 15" x 4", 15" x 5"

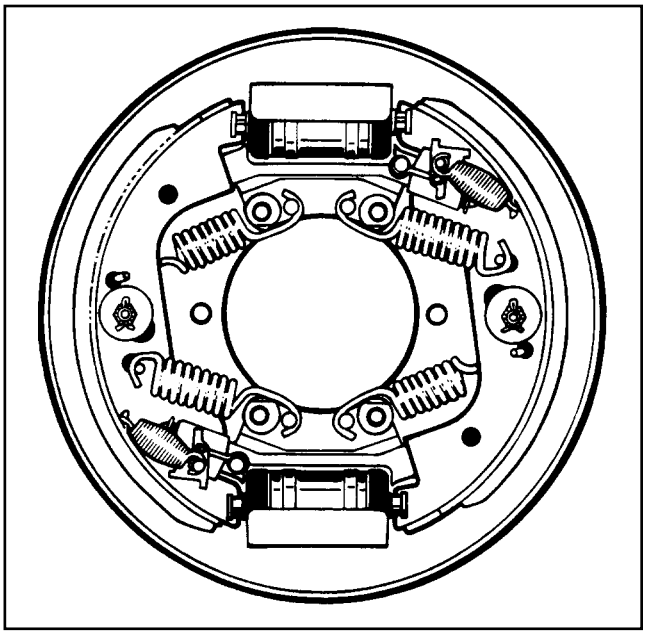

AUTOMATIC ADJUSTMENT

FMSI LINING	FMSI SHOE	BRAKE SIZE
4646	400	15" x 5"
4647	401	15" x 4"

MERITOR UNLINED SHOE	SIZE	FMSI NO.
R700401	15" x 4"	4647-401
R700400	15" x 5"	4646-400

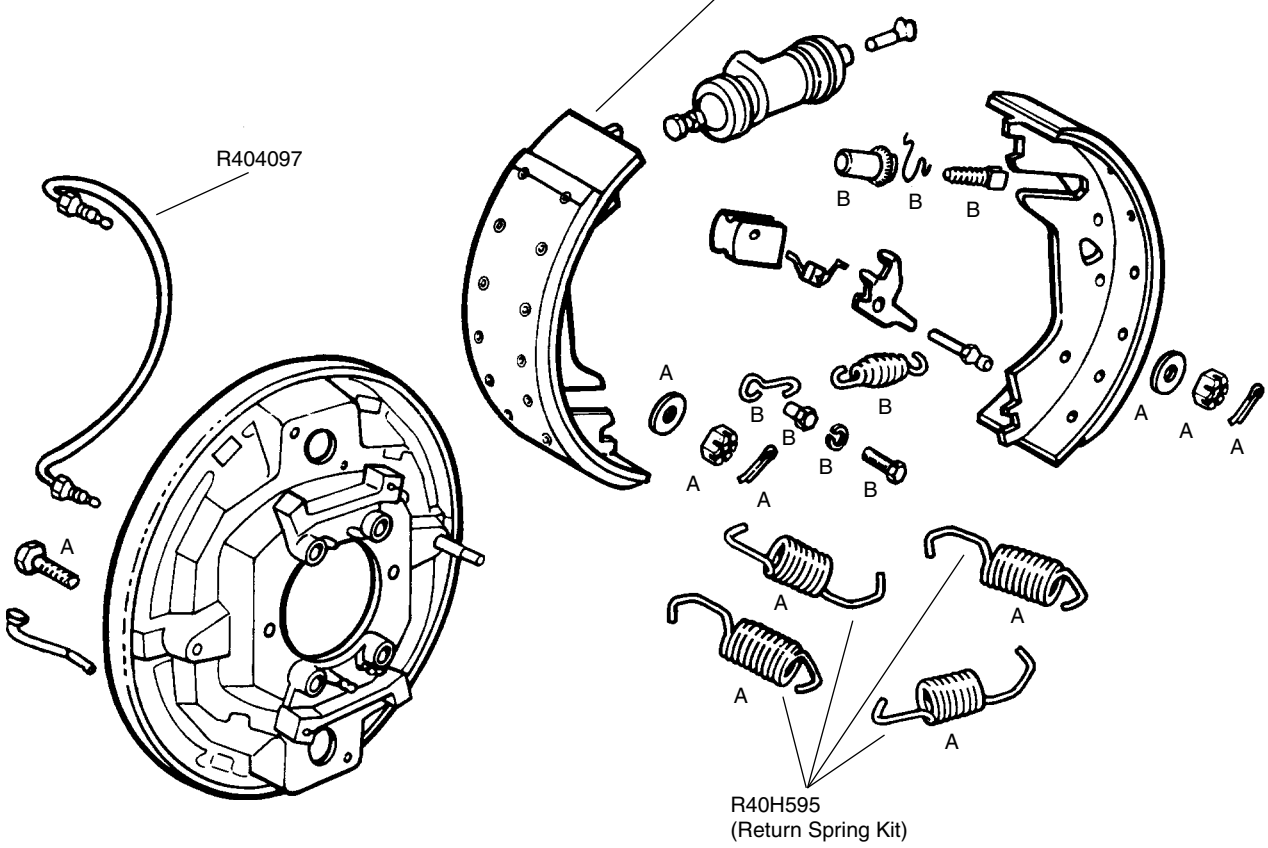

A	**Contained in Hold Down Kit R40H9220**
B	**Contained in Adjuster Kit** **R40H3538 LH** **R40H3539 RH**

For Wheel Cylinder Applications see Vehicle Application Guide, Section 1

GUNITE (KELSEY-HAYES) REAR BRAKE 15" x 4", 15" x 5"

APPLICATION		KIT NUMBER
RETURN SPRING KIT **for** **GUNITE (KELSEY-HAYES)** **15" x 4", 15" x 5"** **Automatic Adjustment** **Rear Brake** Services One Axle		**MERITOR KIT R40H595** Replaces Gunite (Kelsey-Hayes) 7004 4 13/16" Long Gray 5 3/8" Long Black
HOLD DOWN KIT **for** **GUNITE (KELSEY-HAYES)** **15" x 4", 15" x 5"** **Automatic Adjustment** **Rear Brake** Services One Wheel		**MERITOR KIT R40H9220**
AUTOMATIC ADJUSTER KIT **RH** LH Thread **for** **GUNITE (KELSEY-HAYES)** **15" x 4", 15" x 5"** **Automatic Adjustment** **Rear Brake** Services One Wheel		**MERITOR KIT R40H3539** (RH)
AUTOMATIC ADJUSTER KIT **LH** RH Thread **for** **GUNITE (KELSEY-HAYES)** **15" x 4", 15" x 5"** **Automatic Adjustment** **Rear Brake** Services One Wheel		**MERITOR KIT R40H3538** (LH)

CROSS TUBE ASSEMBLY	MERITOR NO.	REPLACES	APPLICATION
	R404097	Gunite (Kelsey-Hayes) 7012	For Gunite (Kelsey-Hayes) 15" x 4", 15" x 5" Hydraulic Rear Brakes.

SPRING RETAINER PIN	MERITOR NO.	APPLICATION
	R404038	For Gunite (Kelsey-Hayes) 15" x 4", 15" x 5" Hydraulic Rear Brakes.

LUCAS (FORD) REAR BRAKE
15" x 5", 15" x 6" and 15" x 7"

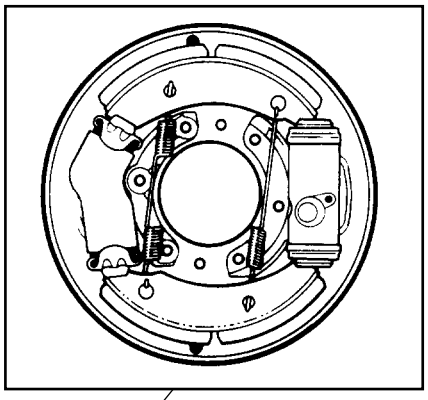

AUTOMATIC ADJUSTMENT

FMSI LINING	FMSI SHOE	BRAKE SIZE
4528A	542	15" x 5"
4504A	543	15" x 6"
4505A	544	15" x 7"

COMPLETE BACKING PLATE
SEE PAGE 4-37

BARE BACKING PLATE
291003 5" RH
291002 5" LH
291005 6" & 7" RH
291004 6" & 7" LH

CYLINDERS AND EXPANDERS
SEE PAGE 6-131

R40H618
(SPRING KIT)

SP7862S RH
SP7861S LH

MERITOR UNLINED

SHOE	SIZE	FMSI NO.
451003	15" x 5"	4528A-542
451004	15" x 6"	4504A-543
451005	15" x 7"	4505A-544

Wheel Cylinder

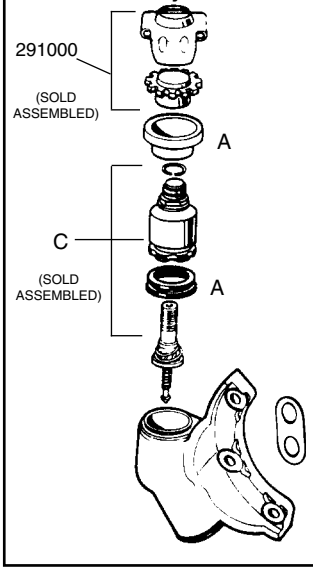

A	**Contained in Seal Kits (Services One Wheel) SP7873S for 1 3/4" Wheel Cylinder and Expander**
B	**Contained in Expander Kits SP7880S (RH) for 1 3/4" Dia. Expander SP7879S (LH) for 1 3/4" Dia. Expander**
C	**Adjuster Assembly SP7887S for 1 3/4" Dia. Wheel Cylinder**
D	**Contained in Expander Assembly SP7920S**

Expander

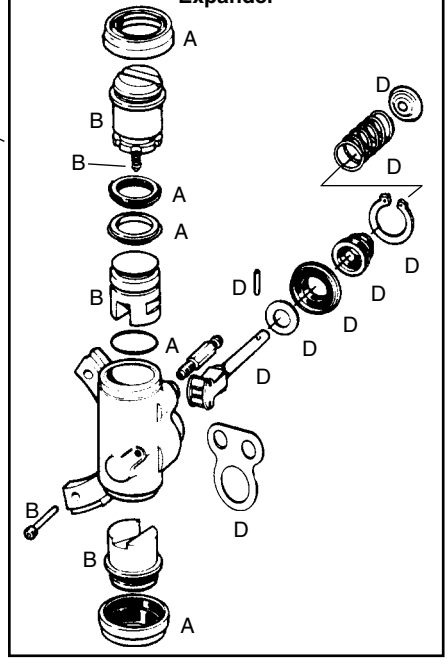

For Wheel Cylinder Applications see Vehicle Application Guide, Section 1

LUCAS (FORD) REAR BRAKE
15" x 5", 15" x 6" and 15" x 7"

APPLICATION		KIT NUMBER
RETURN SPRING KIT **for** **LUCAS (FORD)** **15" x 5", 15" x 6", 15" x 7"** **Automatic Adjustment** **Rear Brake** Services One Axle	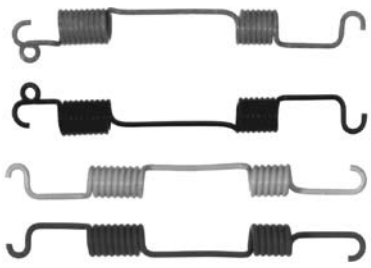	**MERITOR KIT R40H618** Replaces Lucas (Ford) SP7896/SP7897(New) SP7852/SP7853 (Old) Ford E4HZ-2296B/2297B (New) E4HZ-2296A/2297A (Old) Includes: 1 Green Spring } For LH Brakes 1 Orange Spring 1 White Spring } For RH Brakes 1 Yellow Spring
CROSS TUBE ASSEMBLIES **for** **LUCAS (FORD)** **15" x 5", 15" x 6", and 15" x 7"** **Rear Brake**		**MERITOR KIT SP7862S** (RH) Replaces Lucas (Ford) SP7862 **MERITOR KIT SP7861S** (LH) Replaces Lucas (Ford) SP7861
EXPANDER KIT **for** **LUCAS (FORD)** **15" x 6" and 15" x 7"** Use SP7879S LH SP7880S RH Services One Wheel		**MERITOR KIT SP7879S** (LH) For 1 3/4" Dia. Expander Replaces Lucas (Ford) SP7855 Ford E4HZ-2C197A **MERITOR KIT SP7880S** (RH) For 1 3/4" Dia. Expander Replaces Lucas (Ford) SP7856 Ford E4HZ-2C197B
MANUAL ADJUSTMENT OVERRIDE ASSEMBLY **for** **LUCAS (FORD)** **15" x 5", 15" x 6", and 15" x 7"** **Automatic Adjustment** **Rear Brake**		**MERITOR KIT 291000** Replaces Lucas (Ford) 68191307 Ford E4HZ-2C199A

(Continued on next page)

LUCAS BRAKE DRUMS

OVERALL DEPTH	BRAKE SURFACE WIDTH	PILOT DIA.	BOLT CIRCLE DIA.	BOLT HOLES		WEIGHT	PART NUMBER	FORD PART NUMBER	WHEEL TYPE
				NO.	SIZE				
15.00" X 5"									
6.59"	5.56"	9.44"	11.00"	5	0.66"	76	**85-120517-002**	F5HZ 1126 B	SPOKE
7.22"	5.50"	6.25"	8.75"	6	0.84"	74	**03-120553-002**	C8TZ 1126 E	DISC
8.02"	5.47"	8.99"	10.83"	8	0.84	71	**85-123332-002**	F0HZ 1126 C	DISC
15.00" X 6"									
7.09"	6.50"	9.44"	11.00"	5	0.66"	78	**85-120516-002**	F5HZ 1126 A	SPOKE
8.79"	6.75"	8.99"	10.83"	8	0.84"	84	**85-123331-002**	F0HZ 1126 B	DISC
15.00" X 7"									
8.51"	7.36"	10.50"	12.75"	5	0.78"	89	**85-122011-002**	F5HZ 1126 D	SPOKE
8.51"	7.36"	10.50"	12.75"	6	0.78"	90	**85-123203-002**	F5HZ 1126 F	SPOKE
10.18"	7.56"	8.70"	10.83"	8	0.85"	110	**85-123548-002**	F6HZ 1126 H	DISC
10.92"	7.50"	8.99"	10.83"	8	0.84"	96	**85-123276-002**	F0HZ 1126 A	DISC

LUCAS BRAKE SHOES

Size	FMSI	New Lined Shoe	Reman Lined Shoe	New Steel
15" x 5"	4528A-542	**SMA2124528**	**XSMA2124528L**	**451003**
15" x 6"	4504A-543	**SMA2124504**	**XSMA2124504L**	**451004**
15" x 7"	4505A-544	**SMA2124505**	**XSMA2124505L**	**451005**

LUCAS (FORD) REAR BRAKE (Cont'd.)
15" x 5", 15" x 6" and 15" x 7"

Product Code 201

APPLICATION		KIT NUMBER
AUTOMATIC ADJUSTER ASSEMBLY **for** **LUCAS (FORD)** **15" x 5"** Use E-4060 **for** **LUCAS (FORD)** **15" x 6" and 15" x 7"** Use E-4061 Services One Wheel		**MERITOR SP7888S** For 1 5/8" Dia. Wheel Cylinder Replaces Lucas (Ford) SP7870 Ford E4HZ-2C200B **MERITOR SP7887S** For 1 3/4" Dia. Wheel Cylinder Replaces Lucas (Ford) SP7869 Ford E4HZ-2C200A
NEW STYLE "SLEEVED" EXPANDER WEDGE ASSEMBLY **for** **LUCAS (FORD)** Two Required to Service One Wheel		**MERITOR SP7920S** For Euclid Expanders: 201179, 201180, 201181, 201182 Replaces Lucas (Ford) SP7920 Ford E6HZ-2B024A
SPRING BRAKE CHAMBER **for** **LUCAS (FORD)** **Full Hydraulic Brake**	 R476120 R476120X	**FULL HYDRAULIC** **MERITOR** **R476120** (New) **R476120X** (Reman) Bleeder Kit **MQ5200** **AIR OVER HYDRAULIC** **MERITOR** **R477208** (New) **R477208X** (Reman) **NOTE:** Air/Hydraulic Unit has no Bleeder Ports. R477208 & R477208X not shown, will not have bleeder ports Replaces Midland MA15500
HR-1 HYDRAULIC RELAY VALVE **HPP-1 HYDRAULIC PUSH-PULL VALVE**	 065060X 065077X	**HR-1 HYDRAULIC RELAY VALVE** • 1 7/8" UNS Exhaust Port • 1 7/16" UNF Delivery Port • 1 7/16" UNF Push Pull Delivery Port • 1 7/16" UNF Control Port • 1 9/16" Supply Port • 2 1/2" UNC Mounting Holes **HPP-1 HYDRAULIC PUSH-PULL VALVE** • 1 1/8" PT Supply Port • 2 1/8" PT Delivery Port • 1 1/8"-27" Exhaust Port

DURAPARK® 15" Diameter 5", 6", & 7" Widths

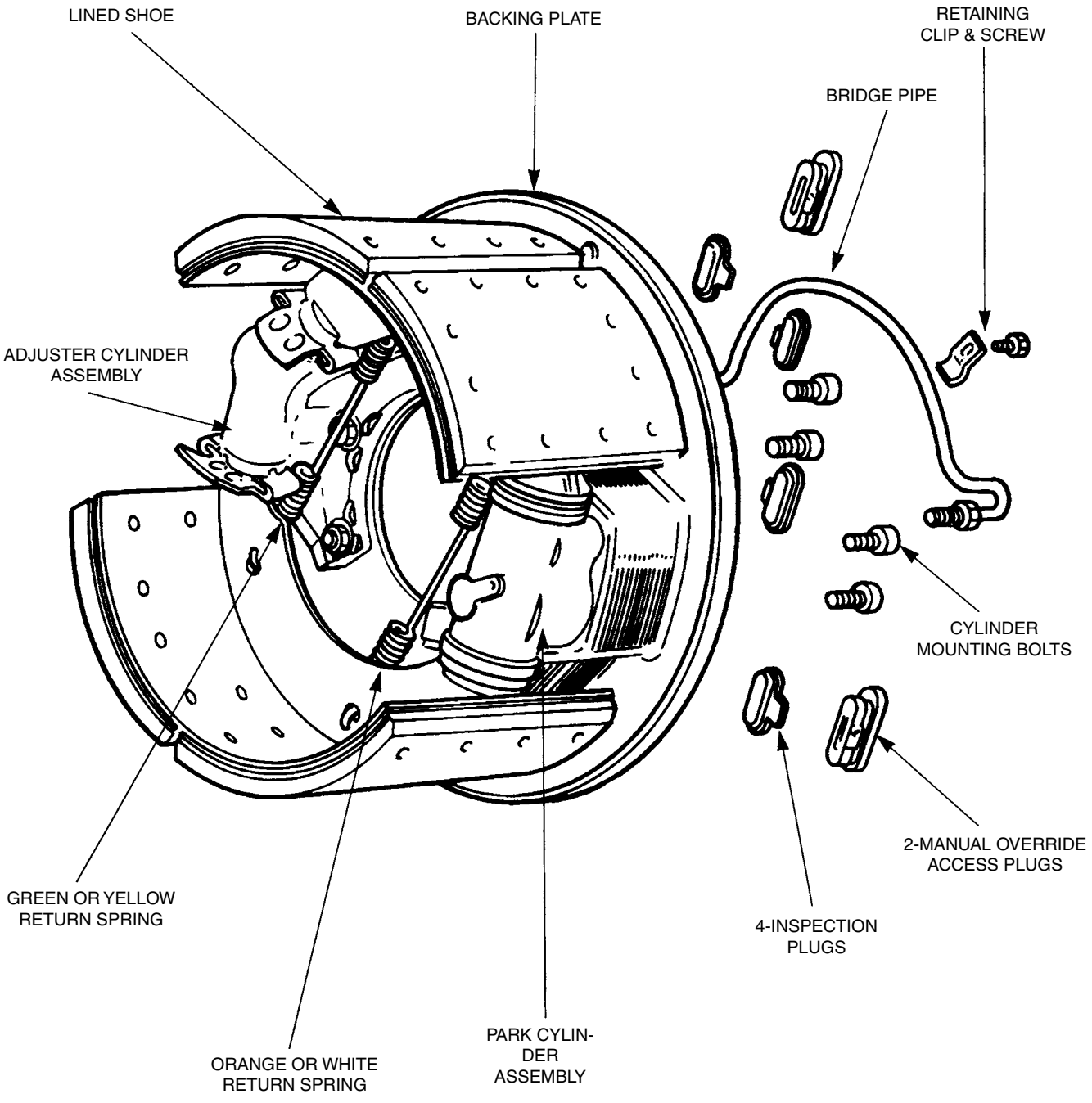

Brake Position	LH	RH
SPRING KIT (1) Green or Yellow Spring (1) Orange or White Spring	**SP7896S** SP7896 (green/orange)	**SP7897S** SP7897 (yellow/white)
The springs on the A2LS brakes have been redesigned and new spring kits created. The new springs simultaneously adjust the top and bottom during forward stops of the vehicle . Previously, the bottom shoe adjusted during forward stops and the top shoe during reverse stops. The top and bottom shoe adjustment during forward stops is accomplished by different spring tensions between the two springs on each brake. ***Initially, the new spring kits must be installed in Axle Sets (LH & RH wheels) in order to prevent automatic brake adjustment imbalance.***	**R407969** Complete axle kit includes both SP7896S & SP7987S **LH** **RH** 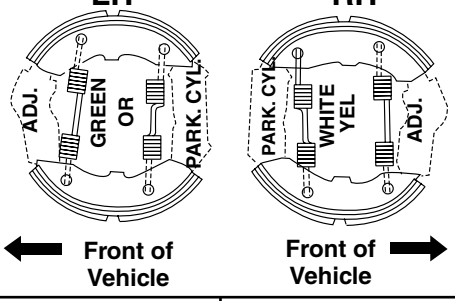 Front of Vehicle Front of Vehicle	
BRIDGE PIPE KIT (1) Bridge Pipe Assembly (1) Retaining Clip (1) Screw	**SP7861S** SP7861	**SP7862S** SP7862
PLUG KIT (2) M.O. Access Plugs (4) Inspection Plugs	**SP7860S** SP7860	
BACKING PLATE KIT 5" shoe width	**29 1002** 68919018	**29 1003** 68919019
BACKING PLATE KIT 6" & 7" shoe widths (1) Dirtshield (2) M.O. Access Plugs (1) Park Cylinder Gasket (4) Inspection Plugs (1) Adjuster Cylinder Gasket (4) Mounting Bolts	**29 1004** 68919020 (Illustration pg. 2-140)	**29 1005** 68919021
BOLT KIT, CYL. TO BACKPLATE	**SP7854S**	**SP7854**

Bore Size and Brake Position	1.75" R.H./L.H.	
SEAL KIT, WHEEL END (1) Seal kit, Adjuster Cylinder (1) Seal kit, Park Cylinder	**SP7873S** SP7873	

Brake Shoe and Lining Kits

Brake Size	Unlined Shoe (each)	Lined Shoe (each)
15 x 5"	**45 1003** 68937200	**SMA2124528**
15 x 6"	**45 1004** 68937201	**SMA2124504**
15 x 7"	**45 1005** 68937202	**SMA2124505**

Park Cylinder

DURAPARK® 15" Diameter 5", 6", & 7" Widths

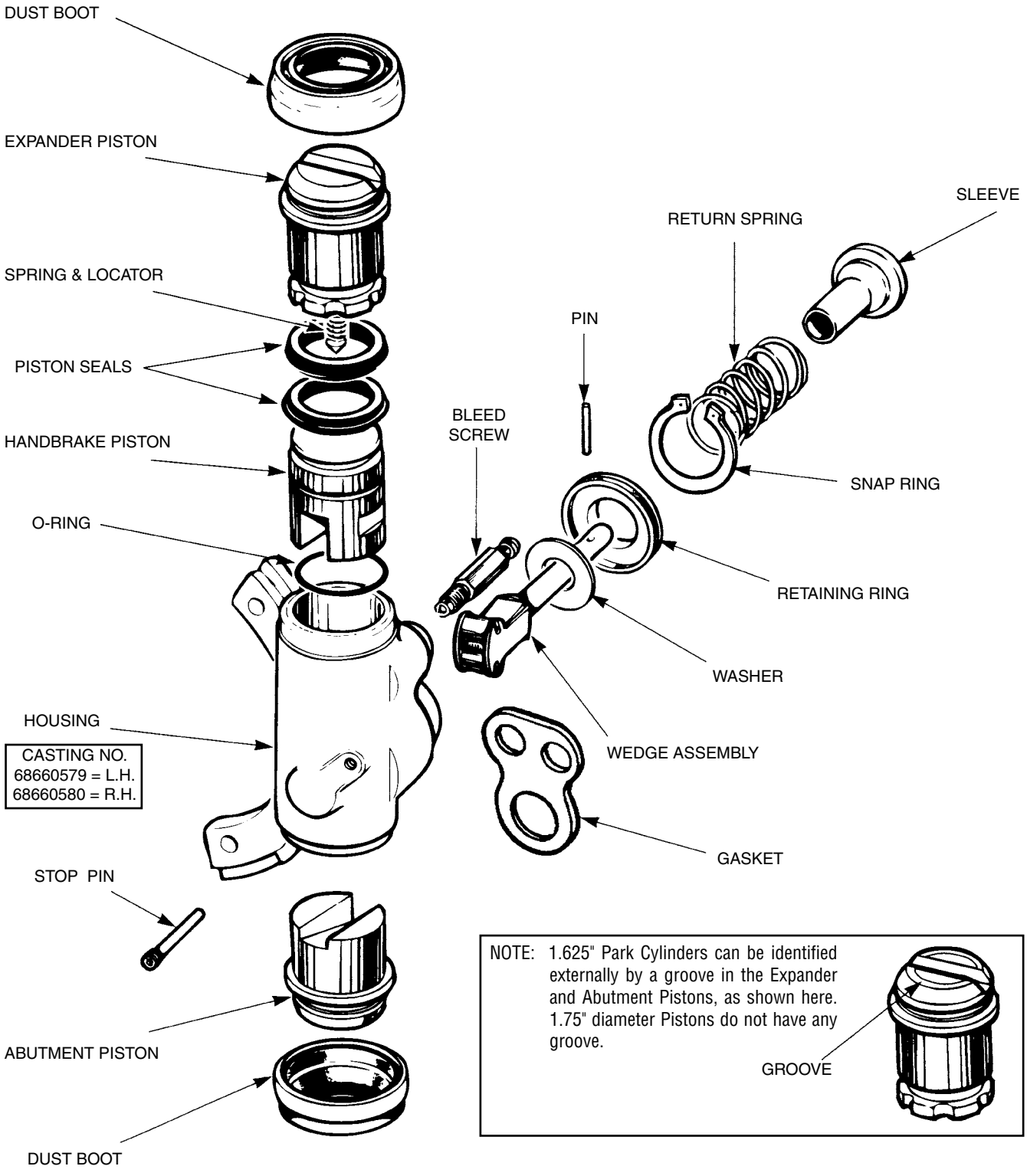

NOTE: 1.625" Park Cylinders can be identified externally by a groove in the Expander and Abutment Pistons, as shown here. 1.75" diameter Pistons do not have any groove.

Bore Size and Brake Position	1.75" LH	1.75" RH
Minor Overhaul Kits		
SEAL KIT (1) Dust Boots (1) Retaining Ring (2) Hydraulic Seals (1) Gasket (1) O-Ring (1) Grease Pack	**SP7872S** SP7872	
DUST BOOT (2) Dust Boots (1) Grease Pack	**SP7889S** SP7889	
PORT INSERT	**29 1006** 68150036	
BLEED SCREW	**29 1001** 68660515	
Major Overhaul Kits		
PISTON KIT (1) Expander Piston (1) Spring & Locator (1) Handbrake Piston (1) Stop Pin (1) Abutment Piston	**SP7879S** SP7879	**SP7880S** SP7880
WEDGE KIT (1) Wedge Assembly (1) Sleeve (1) Washer (1) Pin (1) Retaining Ring (1) Gasket (1) Snap Ring (1) Grease Pack (1) Return Spring	**SP7920S** SP7920	
HOUSING (1) Housing (2) Port Inserts (1) Bleed Screw	**29 1056** 68919052	**29 1057** 68919053
CYLINDER (1) Park Cylinder Assembly (1) Gasket (2) Bolts	**20 1179** 68919067 **20 1179X** Reman.	**20 1180** 68919068 **20 1180X** Reman.

Adjuster Cylinder

DURAPARK® 15" Diameter 5", 6", & 7" Widths

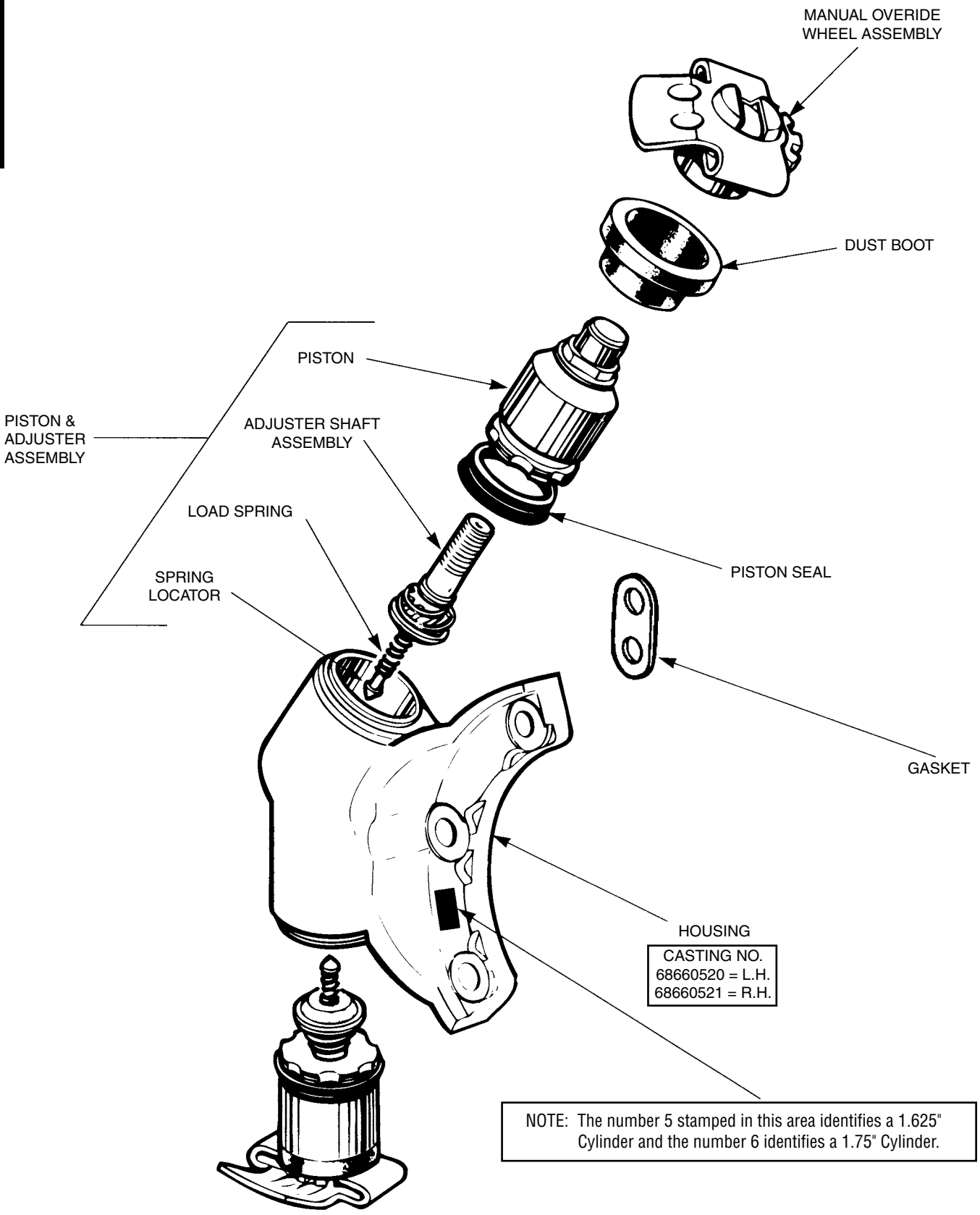

NOTE: The number 5 stamped in this area identifies a 1.625" Cylinder and the number 6 identifies a 1.75" Cylinder.

Adjuster Cylinder — SERVICE KITS

Bore Size and Brake Position	1.75" LH	1.75" RH
Minor Overhaul Kits		
SEAL KIT (2) Piston Seals (2) Dust Boots (1) Gasket (1) Grease Pack	**SP7871S** SP7871	
DUST BOOT (2) Dust Boots (1) Grease Pack	**SP7868S** SP7868	
PORT INSERT	**29 1000** 68191307	
MANUAL OVERIDE WHEEL	**29 1006** 68150036	
Major Overhaul Kits		
HOUSING (1) Housing (1) Port Insert	**29 1061** 68966097	**29 1062** 68966098
PISTON & ADJUSTER ASSEMBLY (1) Piston (1) Adjustment Shaft Assembly (1) Load Spring (1) Spring Locator	**SP7887S** SP7887	**SP7888S** SP7888
CYLINDER (1) Adjuster Cylinder Assembly (2) Manual Override Wheels (1) Gasket (2) Bolts	**20 1183** 68919071 **20 1183X** Reman.	**20 1184** 68919072 **20 1184X** Reman.

Meets FMVSS — 105 requirements for Automatic Adjustment

LUCAS GIRLING DRUM BRAKES
FORD TRUCKS CLASS 5, 6, 7

Heavy-Duty Return Spring Kits

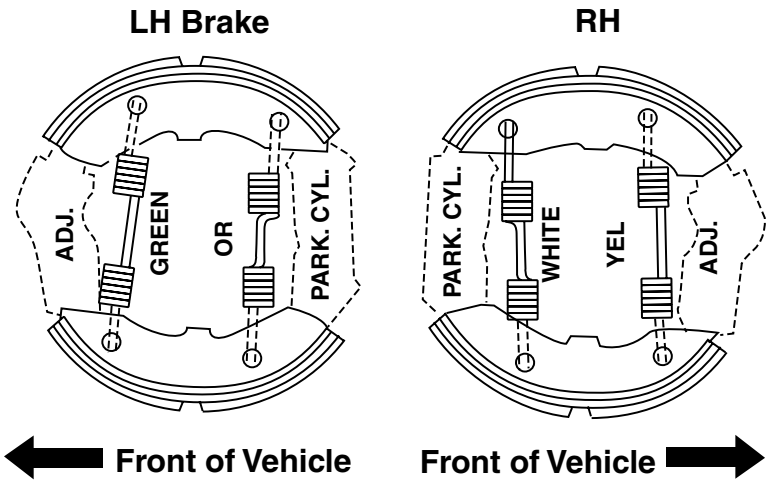

The springs on Lucas brakes have been redesigned and new spring kits created. The new springs simultaneously adjust the top and bottom during forward stops of the vehicle . Previously, the bottom shoe adjusted during forward stops and the top shoe during reverse stops.

The top and bottom shoe adjustment during forward stops is accomplished by different spring tensions between the two springs on each brake.

Initially, the new spring kits must be installed in Axle Sets (LH & RH wheels) in order to prevent automatic brake adjustment imbalance.

These new springs are being introduced as a running interchangeable change.

Kit Description	Kit #
Spring Kit	**R40H618**

ARROWS INDICATE TOOL MOVEMENT

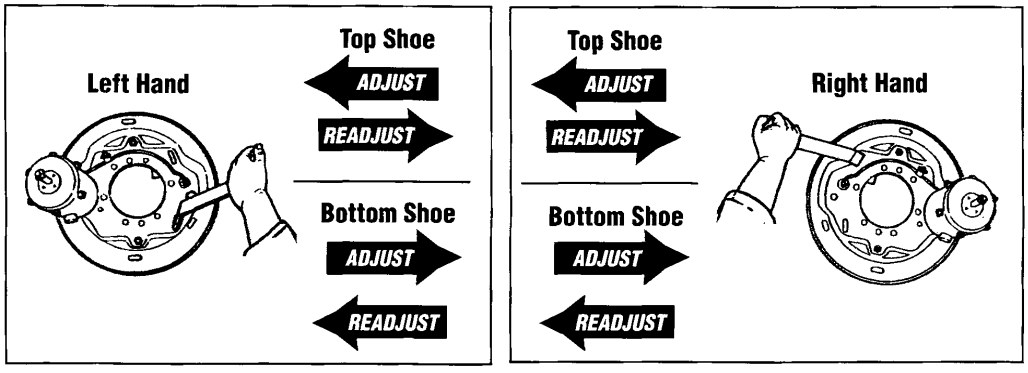

LUCAS BACKING PLATE ASSEMBLIES

(Left Hand Assembly shown)	MERITOR NO.	BACKING PLATE OVERALL DEPTH	APPLICATION
◄—Front of Vehicle Assembly includes backing plate, wheel cylinder, expander, two return springs, cross tube, and all rubber inspection plugs.	**79919003** (New) **R429422X** (Reman)	2 1/2"	Left Hand Assembly with 1 3/4" Wheel Cylinder and Expander for 6" and 7" Brakes
	79919004 (New) **R429423X** (Reman)	2 1/2"	Right Hand Assembly with 1 3/4" Wheel Cylinder and Expander for 6" and 7" Brakes
	79919005 (New) **R429424X** (Reman)	1 1/2"	Left Hand Assembly with 1 3/4" Wheel Cylinder and Expander for 5" Brakes **Important Note:** The 1 3/4" assembly is a retrofit for the 1 5/8" assembly, usually used on the 15" x 5" brake. When retrofitting to 1 3/4", you must do both wheel ends on a single rear axle. Retrofitting should never be done on a tandem rear axle using 1 5/8" assemblies.
	79919006 (New) **R429425X** (Reman)	1 1/2"	Right Hand Assembly with1 3/4" Wheel Cylinder and Expander for 5" Brakes **Important Note:** The 1 3/4" assembly is a retrofit for the 1 5/8" assembly, usually used on the 15" x 5" brake. When retrofitting to 1 3/4", you must do both wheel ends on a single rear axle. Retrofitting should never be done on a tandem rear axle using 1 5/8" assemblies.
	68021279NPI (New) **68021279X** (Reman)	1 3/4"	Left Hand New Backing Assembly with Shoes. 15" x 5" x 1.75" 55.93 lbs.
	68021280NPI (New) **68021280X** (Reman)	1 3/4"	Right Hand New Backing Assembly with Shoes. 15" x 5" x 1.75" 55.93 lbs.
	68021281NPI (New) **68021281X** (Reman)	1 3/4"	Left Hand New Backing Assembly with Shoes. 15" x 6" x 1.75" 58.70 lbs.
	68021282NPI (New) **68021282X** (Reman)	1 3/4"	Right Hand New Backing Assembly with Shoes. 15" x 6" x 1.75" 58.70 lbs.
	68021283NFP (New) **68021283X** (Reman)	1 3/4"	Left Hand New Backing Assembly with Shoes. 15" x 7" x 1.75" 61.73 lbs.
	68021284NFP (New) **68021284X** (Reman)	1 3/4"	Right Hand New Backing Assembly with Shoes. 15" x 7" x 1.75" 61.73 lbs.

WAGNER FRONT BRAKE
14" x 2 1/2", 15" x 3", 15" x 3 1/2", 15" x 5"

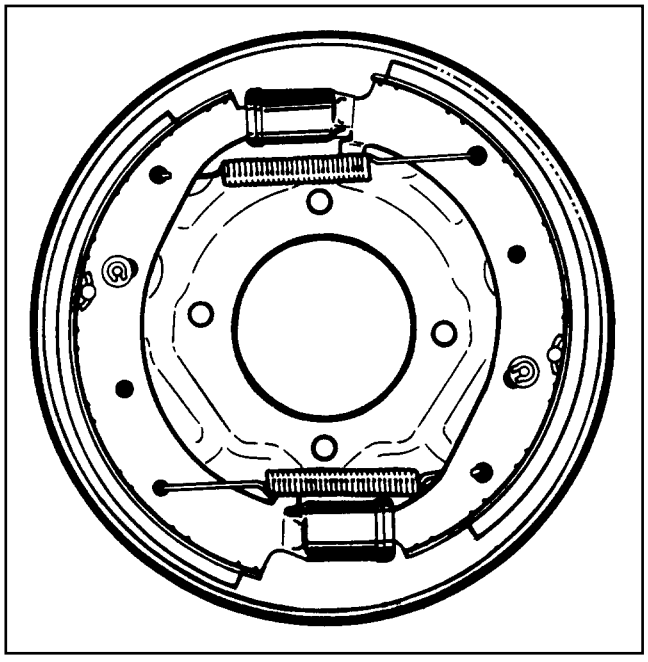

MANUAL ADJUSTMENT

FMSI LINING	FMSI SHOE	BRAKE SIZE
1294	296	14" x 2 1/2"
1245A	235	15" x 3"
1280	463	15" x 3 1/2"
1345	490	15" x 5"

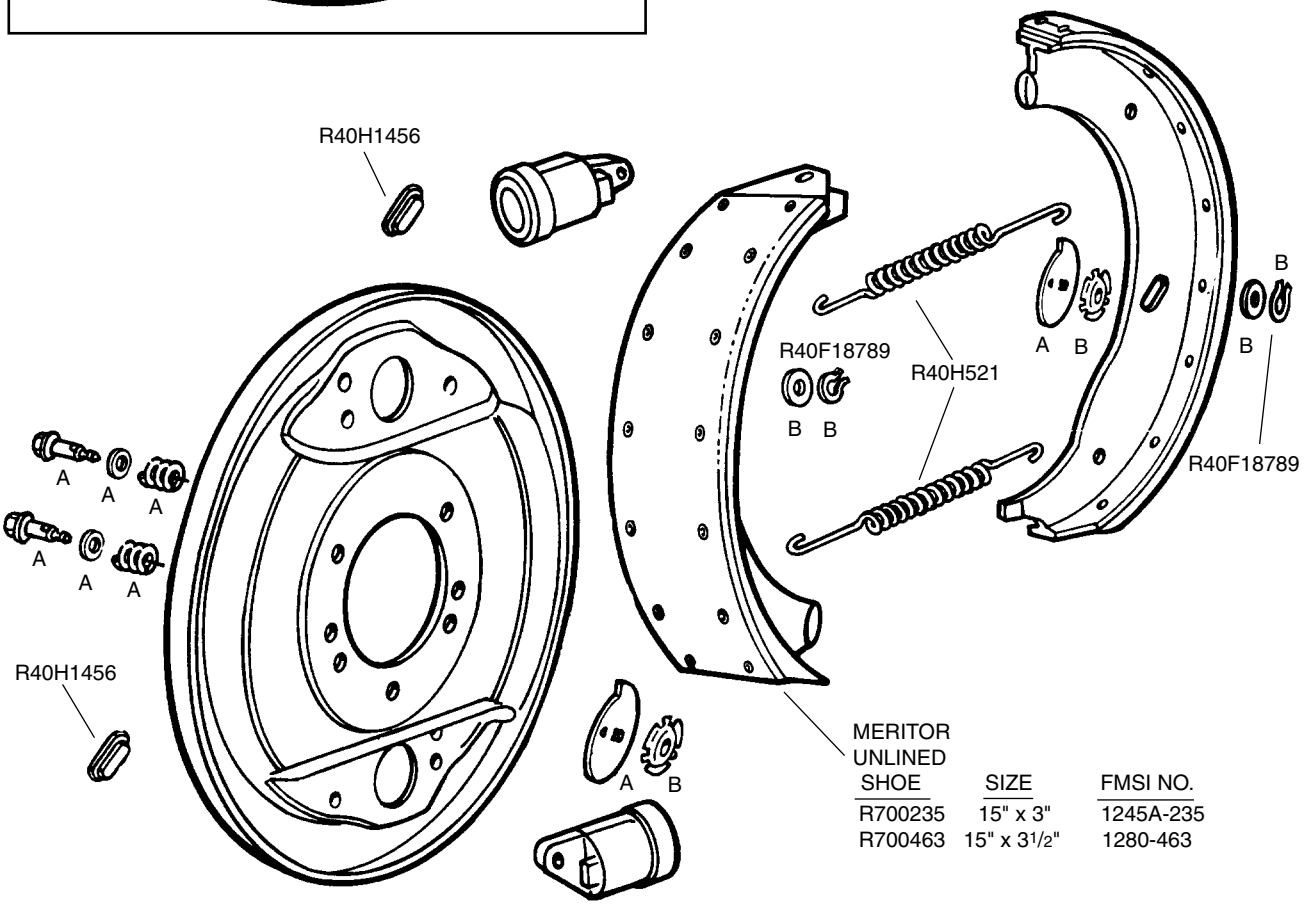

A	**Contained in Adjuster Kit R40H3524**
B	**Contained in Hold Down Kit R40H9201**

For Wheel Cylinder Applications see Vehicle Application Guide, Section 1

WAGNER FRONT BRAKE
14" x 2 1/2", 15" x 3", 15" x 3 1/2", 15" x 5"

APPLICATION		KIT NUMBER
RETURN SPRING KIT **for** **All WAGNER** **Manual** **Adjustment** **Front Brake** Services One Axle		**MERITOR R40H521** Replaces Wagner F36445 8 1/2" Long Green
HOLD DOWN KIT **for** **All WAGNER** **Manual** **Adjustment** **Front Brake** Services One Wheel	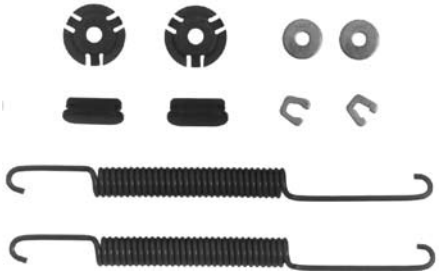	**MERITOR R40H9201** Replaces Wagner F19408
MANUAL ADJUSTER KIT **for** **All WAGNER** **Manual** **Adjustment** **Front Brake** **Except General Motors** Services One Wheel	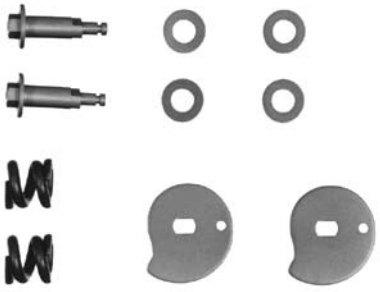	**MERITOR R40H3524** Replaces Wagner F3909 F75775 F10602 F19408
MANUAL ADJUSTER KIT **for** **Chevrolet** **& GMC** **Manual** **Adjustment** **Front Brake** Services One Wheel	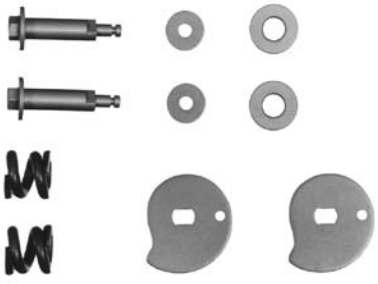	**MERITOR R404132** Replaces Wagner F3909 F75778 F10602 F19408
MANUAL ADJUSTER KIT **for** **Chevrolet** **& GMC** **Manual** **Adjustment** **Front Brake** Services One Wheel	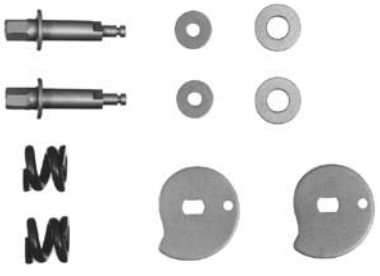	**MERITOR R404133** Replaces Wagner F3909 F75779 F32523 F10602
ADJUSTER STUD **for** **WAGNER** **Manual** **Adjustment** **Front Brake**	 I.D. Mark	

MERITOR NO.	REPLACES	I.D. MARK	O.A.L.
NLA	Wagner F75775	75	2.01"
NLA	Wagner F75779	79	2.60"

WAGNER FRONT BRAKE
14" x 2 1/2", 15" x 3", 15" x 3 1/2", 15" x 5"

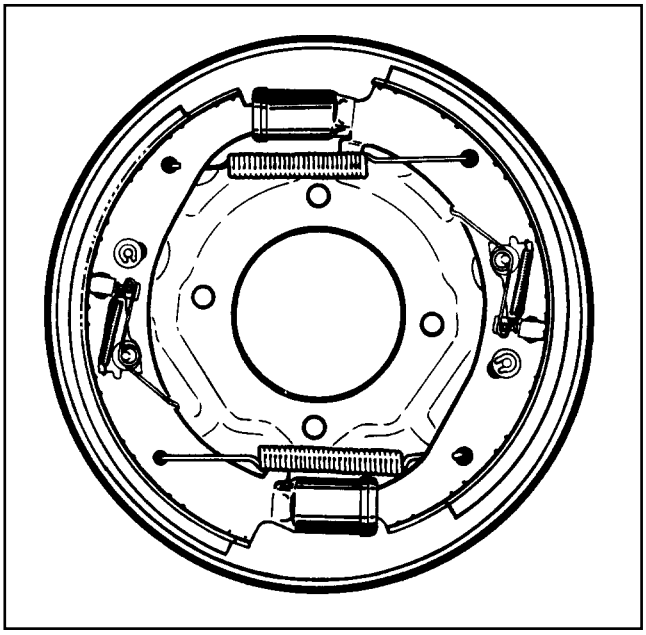

AUTOMATIC ADJUSTMENT

FMSI LINING	FMSI SHOE	BRAKE SIZE
1294A	325	14" x 2 1/2"
1245C	321	15" x 3"
1280B	322	15" x 3 1/2"
1345A	491	15" x 5"

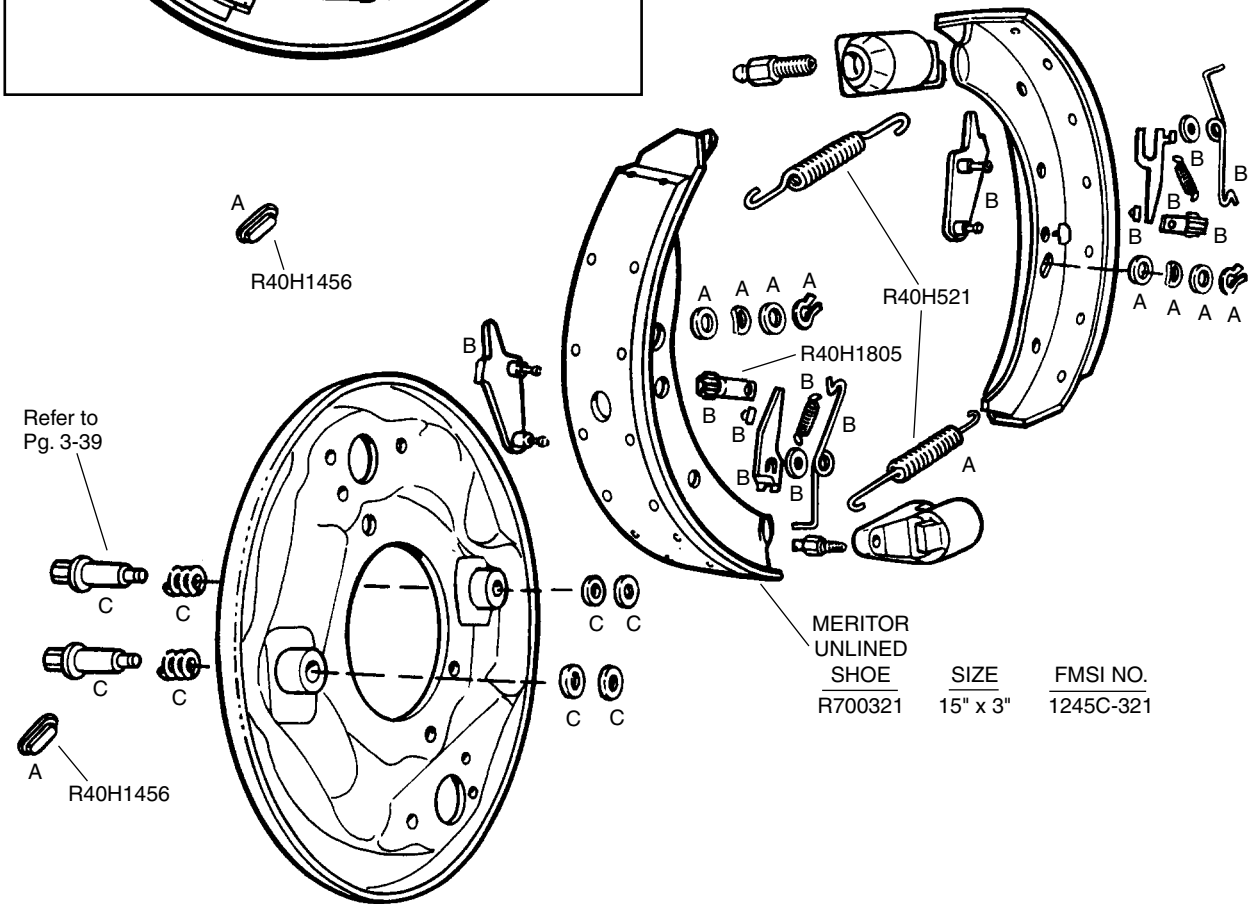

A	**Contained in Hold Down Kit R40H9237**
B	**Contained in Adjuster Kit R40H3502 LH R40H3503 RH**
C	**Contained in Stud Kit, See Pg. 3-41**

For Wheel Cylinder Applications see Vehicle Application Guide, Section 1

WAGNER FRONT BRAKE
14" x 2 1/2", 15" x 3", 15" x 3 1/2", 15" x 5"

APPLICATION		KIT NUMBER
RETURN SPRING KIT for All WAGNER AutomaticAdjustment Front Brake Services One Axle		**MERITOR KIT R40H521** 8 1/2" Long Green
HOLD DOWN KIT for All WAGNER AutomaticAdjustment Front Brake Services One Wheel	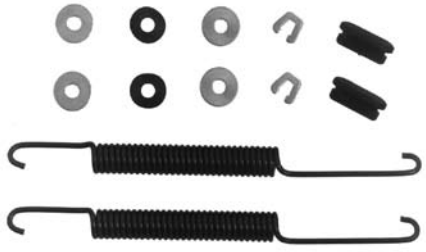	**MERITOR KIT R40H9237** Replaces Wagner F73399
AUTOMATIC ADJUSTER KIT RH for All WAGNER AutomaticAdjustment RH Front Brake Services One Wheel	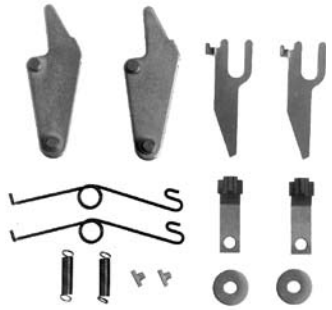	**MERITOR KIT R40H3503** (RH) Replaces Wagner F59160
AUTOMATIC ADJUSTER KIT LH for All WAGNER AutomaticAdjustment LH Front Brake Services One Wheel	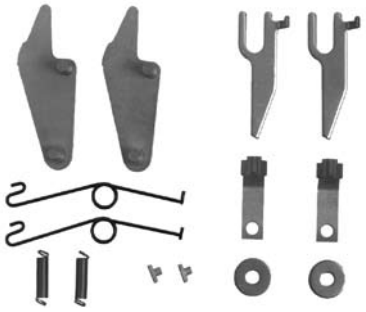	**MERITOR KIT R40H3502** (LH) Replaces Wagner F59159
STUD KIT for ALL WAGNER Automatic Adjustment Front Brake Services One Wheel		**MERITOR KIT R404140** **Includes** Stud (O.A.L. 2.15") I.D. Mark - 71 **MERITOR KIT R404141** **Includes** Stud (O.A.L. 2.50") I.D. Mark - 72
ADJUSTING PLUG for ALL WAGNER **Automatic Adjustment Front Brake** (4 Plugs Per Package) Services One Axle		**MERITOR R40H1805** Replaces Wagner F59351

WAGNER REAR BRAKE (ALL)

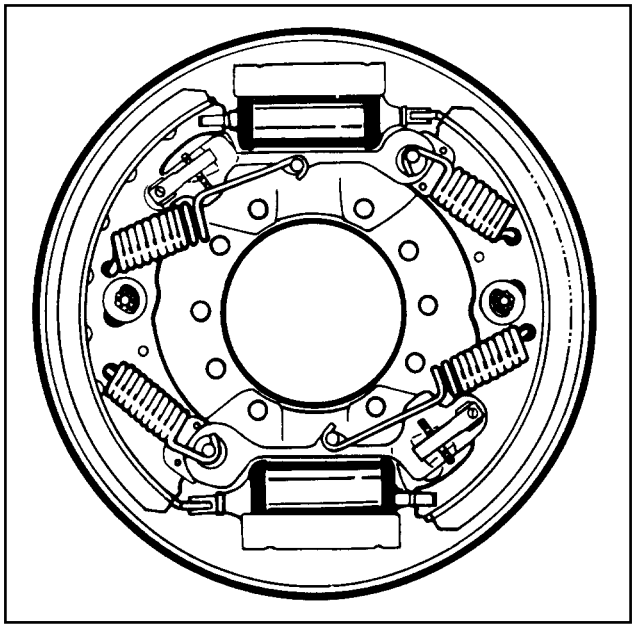

MANUAL ADJUSTMENT

FMSI LINING	FMSI SHOE	BRAKE SIZE
1252	377	15" x 5"
1254	385	16" x 5"
1255	386	16" x 6"
4596	380	15" x 6"
4597	382	15" x 7"
4645A	375	15" x 4"

MERITOR UNLINED SHOE	SIZE	FMSI NO.
R700346	15" x 5"	1252-377
R700381	15" x 6"	4596-380

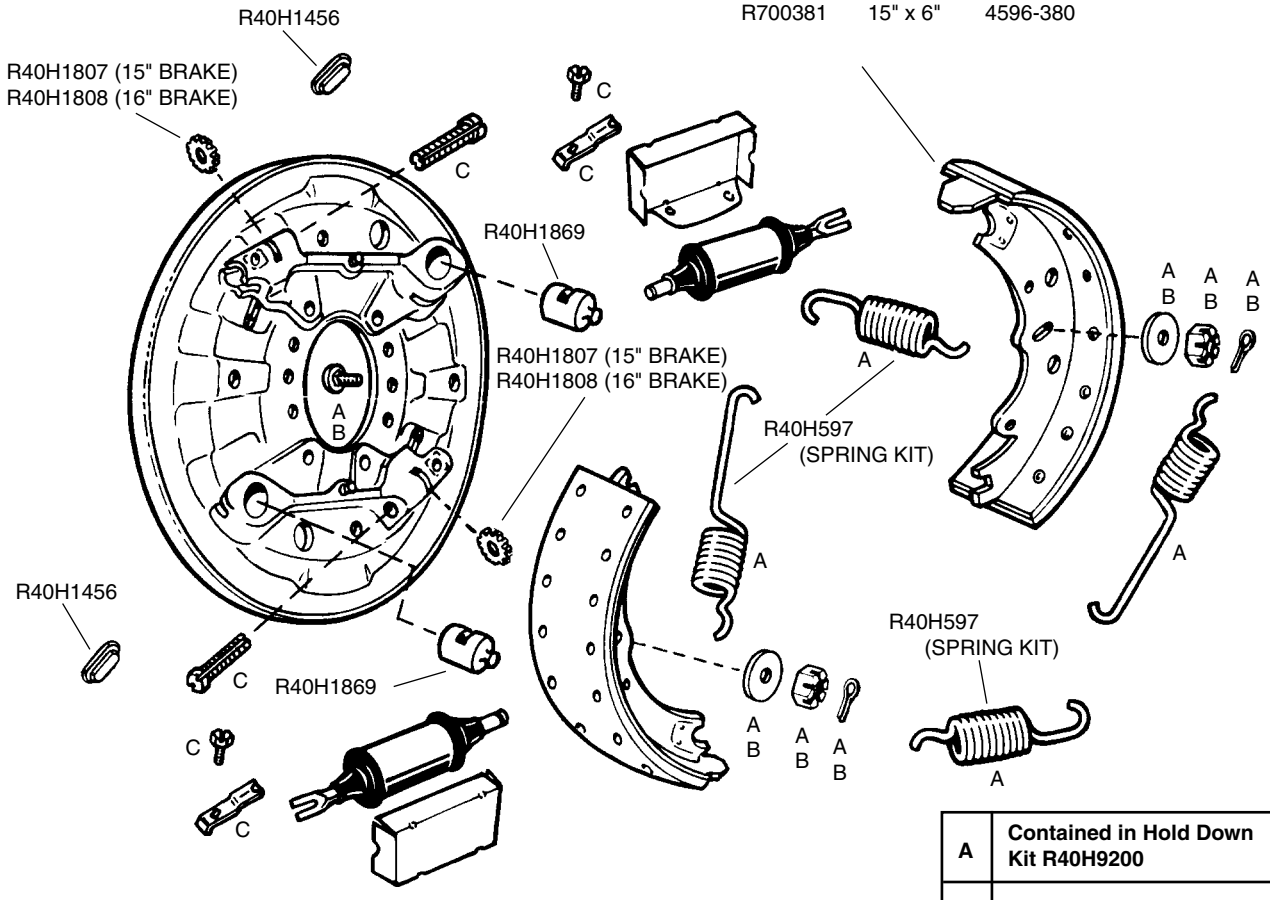

A	**Contained in Hold Down Kit R40H9200**
B	**Contained in Guide Bolt Kit R40H8200**
C	**Contained in Adjuster Kits R40H3540 & R40H3541**

For Wheel Cylinder Applications see Vehicle Application Guide, See Section 1

WAGNER REAR BRAKE (ALL)

APPLICATION		KIT NUMBER
RETURN SPRING KIT **for** **All WAGNER** **15" and 16"** **Manual Adjustment** **Rear Brake** Services One Axle	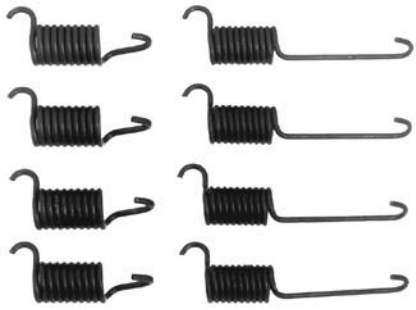	**MERITOR KIT R40H597** 4 1/4" Long 6 5/8" Long Replaces Wagner F98318
HOLD DOWN KIT **for** **ALL WAGNER** **15" and 16"** **Manual Adjustment** **Rear Brake** Services One Wheel	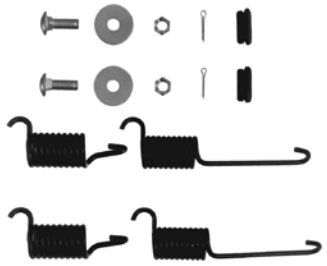	**MERITOR KIT R40H9200** Replaces Wagner F19413
GUIDE BOLT KIT **for** **ALL WAGNER** **15" and 16"** **Manual Adjustment** **Rear Brake** Services One Wheel	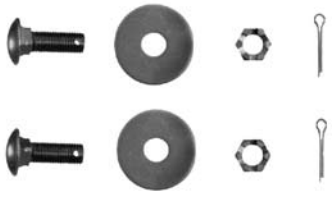	**MERITOR KIT R40H8200** Replaces (2) Wagner F19309
MANUAL ADJUSTER KIT **for** **WAGNER 15"** **Manual Adjustment** **Rear Brake** Services One Wheel		**KIT R404148** Contains **R40H1861** RH Adjuster Screws See Page 3-47 **KIT R404147** Contains **R40H1860** LH Adjuster Screws See Page 3-47
MANUAL ADJUSTER KIT **for** **WAGNER 16"** **Manual Adjustment** **Rear Brake** Services One Wheel		**KIT R404150** Contains **R40H1864** RH Adjuster Screws See Page 3-47 **KIT R404149** Contains **R40H1865** LH Adjuster Screw See Page 3-47
STAR WHEELS 16 Teeth 15" Brake 18 Teeth 16" Brake	16 TEETH 18 TEETH 	**MERITOR NO.** / **REPLACES** / **TEETH** **R40H1807** / Wagner F12086 / 16 **R40H1808** / Wagner F19293 / 18

WAGNER REAR BRAKE (ALL)

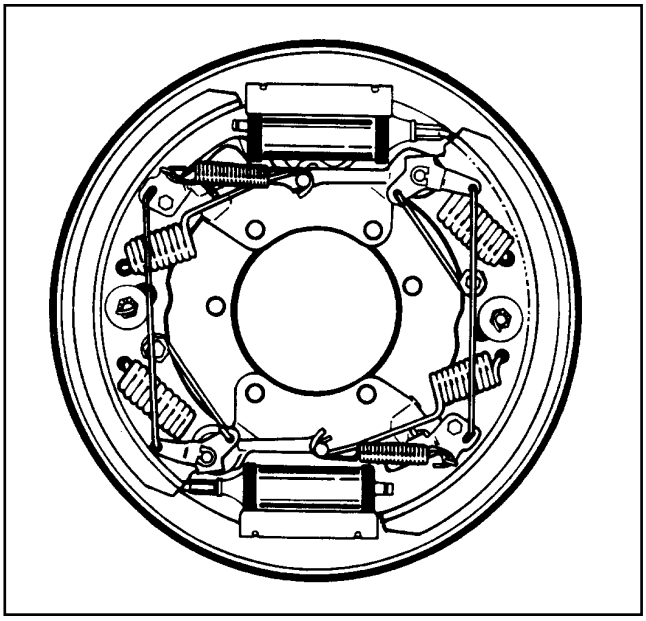

AUTOMATIC ADJUSTMENT

FMSI LINING	FMSI SHOE	BRAKE SIZE
1252	346	15" x 5"
1252	379	15" x 5"
1254	385	16" x 5"
1255	386	16" x 6"
4596	381	15" x 6"
4597	383	15" x 7"
4645A	376	15" x 4"

MERITOR UNLINED SHOE	SIZE	FMSI NO.
R700346	15" x 5"	1252-346
R700381	15" x 6"	4596-381

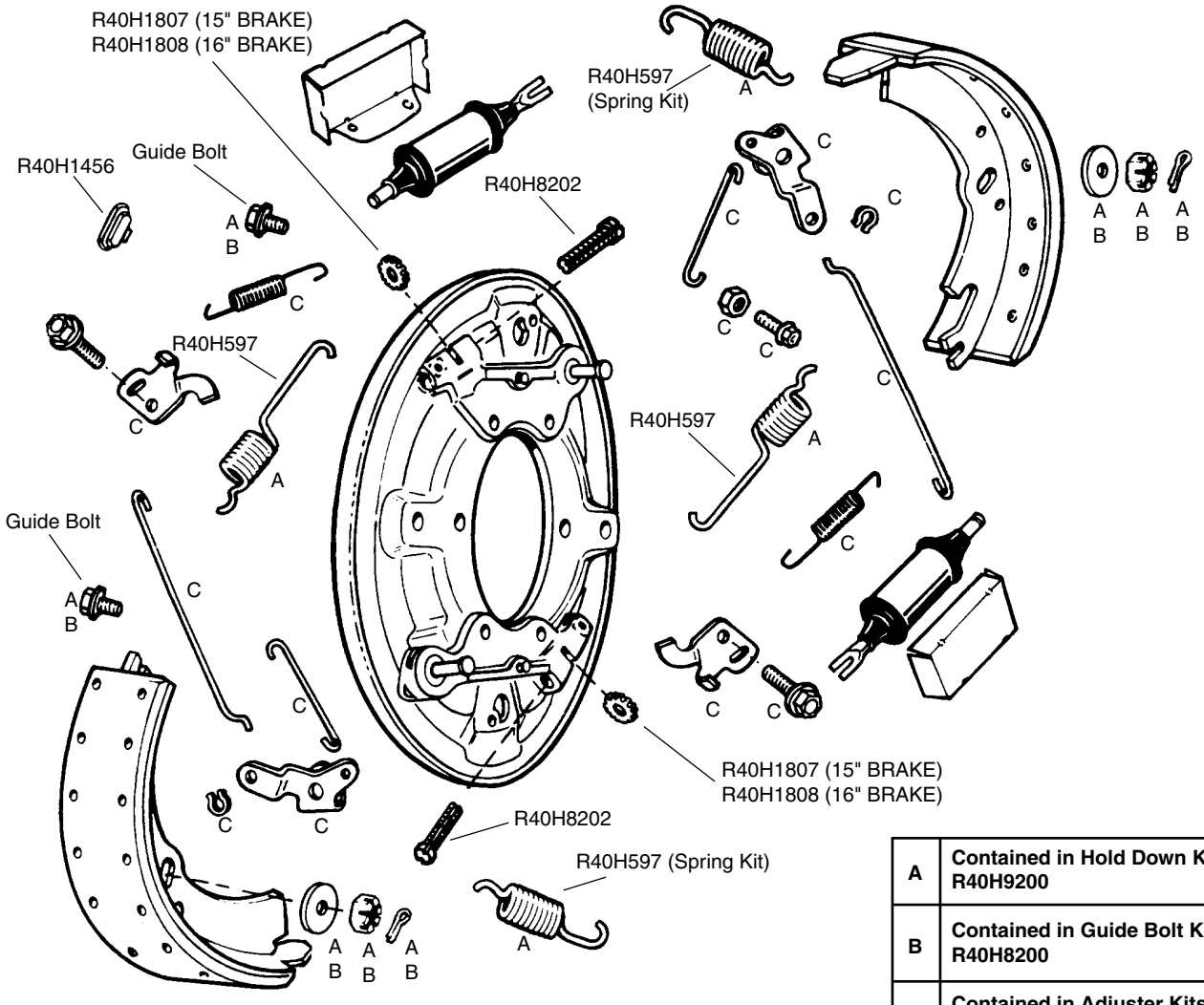

A	**Contained in Hold Down Kit R40H9200**
B	**Contained in Guide Bolt Kit R40H8200**
C	**Contained in Adjuster Kits R40H3540 & R40H3541**

For Wheel Cylinder Applications see Vehicle Application Guide, See Section 1

WAGNER REAR BRAKE (ALL)

APPLICATION		KIT NUMBER
RETURN SPRING KIT **for** **All** **15" and 16"** **WAGNER** **Automatic** **Adjustment** **Rear Brake** Services One Axle	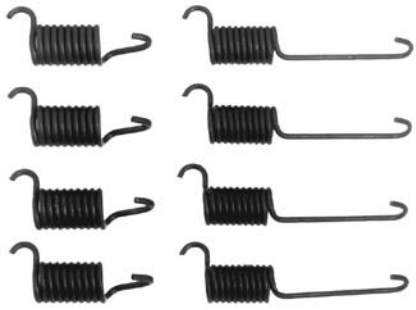	**MERITOR KIT R40H597** 4 1/4" Long 6 5/8" Long Replaces Wagner F98318
HOLD DOWN KIT **for** **All** **15" and 16"** **WAGNER** **Automatic** **Adjustment** **Rear Brake** Services One Wheel	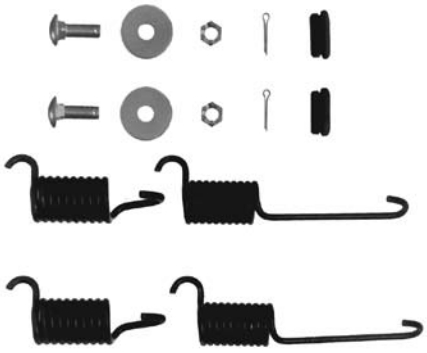	**MERITOR KIT R40H9200** Replaces Wagner F19413
GUIDE BOLT KIT **for** **All** **15" and 16"** **WAGNER** **Automatic** **Adjustment** **Rear Brake** Services One Wheel	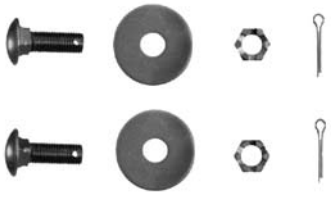	**MERITOR KIT R40H8200** Replaces (2) Wagner F19309
AUTOMATIC ADJUSTER KIT **for** **15" WAGNER** **Automatic** **Adjustment** **Rear Brake** To determine ratio measure distance "A" as shown and refer to chart. Services One Wheel		

MERITOR NO.	RATIO	A	WAGNER NO.
R40H3540 (LH)	1.67	29/32"	F59157
R40H3541 (RH)	1.67	29/32"	F59158

WAGNER ANCHOR BRACKETS

Listed by Brake Size

LEFT HAND BRACKET ASSEMBLY

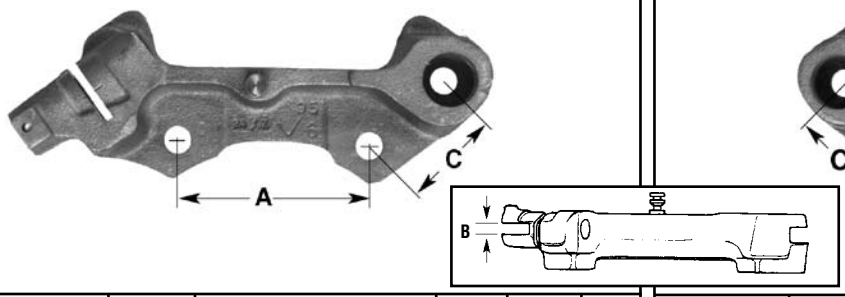

RIGHT HAND BRACKET ASSEMBLY

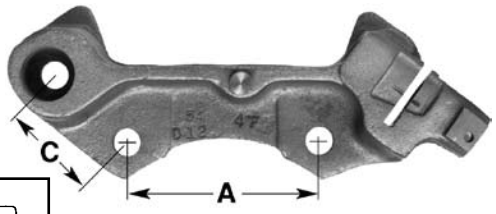

MERITOR NO.	BRAKE SIZE	REPLACES	A	B	C
R40H1916	15" x 4"	Wagner F71934, F57506 ITE 392573C91 351970C91 (Casting No. 19134)	3 19/32"	17/64"	2 7/8"
R40H1900	15" x 6" 15" x 7"	Wagner F71932, F26052 ITE 386262C91 384263C91 (Upper) (Casting No. 20551)	3 19/64"	13/32"	1 7/8"
R40H1902	15" x 6" 15" x 7"	Wagner F68610, F26048 ITE 386264C91 384261C91 (Lower) GM 3933995, 2431345 Dodge 2954607 (Casting No. 20551)	3 37/64"	13/32"	1 7/8"

MERITOR NO.	BRAKE SIZE	REPLACES	A	B	C
R40H1917	15" x 4"	Wagner F71935, F57507 ITE 392574C91 351971C91 (Casting No. 19135)	3 19/32"	17/64"	2 7/8"
R40H1901	15" x 6" 15" x 7"	Wagner F71933, F26053 ITE 386263C91 384264C91 (Upper) (Casting No. 20552)	3 19/64"	13/32"	1 7/8"
R40H1903	15" x 6" 15" x 7"	Wagner F68611, F26049 ITE 386265C91 384262C91 (Lower) GM 3933996, 2431436 Dodge 2954606 (Casting No. 20552)	3 37/64"	13/32"	1 7/8"

BRACKET BOLT ASSEMBLY

MERITOR NO.	REPLACES	APPLICATION
R40H8202	Bendix H8202	Included with all Meritor Anchor Bracket Castings for Wagner Brakes

WAGNER HARDWARE PARTS

15" BRAKE ADJUSTING SCREW	MERITOR NO.	REPACES WAGNER NO.	THREAD SIZE	O.A.L.	APPLICATION
Remove ring for manual applications.	**R40H1861** (RH)	F59303	5/8"-12	1 5/8"	For Wagner 15" Rear Brake
	R40H1860 (LH)	F59302	5/8"-12	1 5/8"	
16" BRAKE ADJUSTING SCREW					
Remove ring for manual applications.	**R40H1864** (RH)	F59532	3/4"-12	1 3/4"	For Wagner 16" Rear Brake
	R40H1865 (LH)	F59531	3/4"-12	1 3/4"	

AUTOMATIC SHOE ANCHOR			SLOT WIDTH	DIA.	O.A.L.	
	R40H1868	F59339	.500"	1"	2"	15" x 6" 15" x 7"
MANUAL SHOE ANCHOR						
	R40H1869	F19146	.500"	1"	1 5/16"	15" x 5" 15" x 6" 15" x 7"

STAR WHEEL				APPLICATION
16 TEETH	18 TEETH			
		R40H1807 16 Teeth	F12086	All Wagner 15" Rear Brakes
		R40H1808 18 Teeth	F19293	All Wagner 16" Rear Brakes

MISCELLANEOUS BRAKE HARDWARE

DUST COVER	MERITOR NO.	REPLACES	GENERAL INFORMATION	APPLICATION
	R40H1456	Wagner F17814 Bendix H1456	Rubber	All
HOLD DOWN CUP				
	R4023969	Wagner F23880 Bendix H1132	$^{13}/_{16}$" O.D.	All
"C" CLIP				
	R404183	GM 3884948	—	GM Rear
"C" CLIP				
	R40F18789 (Shown)	Wagner F18789	—	Wagner Front
	R40FC004395	Wagner FC004395	Alternate Version of R40F18789	
"C" CLIP				
	R40H1177	Wagner F6477 Bendix H1177	—	Wagner Rear
HOLD DOWN PIN	**MERITOR NO.**	**REPLACES**	**END MARKING**	**O.A.L.**
	R4049624	Wagner F23878 Bendix H1110	10	2 $^{9}/_{16}$"

MISCELLANEOUS ADJUSTER PARTS

ADJUSTING SCREW	MERITOR NO.	REPLACES	APPLICATION
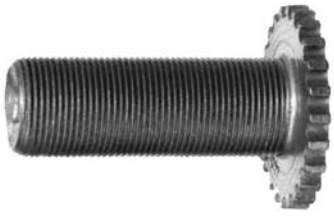	**R40H1843** (RH)	Bendix H1843 GM 3987462	Used on Late Model GM 15" x 4" and 15" x 5" Rear Brake
	R40H1842 (LH)	Bendix H1842 GM 3987461	

NOTES

MERITOR®
an ArvinMeritor™ brand

Import Vehicle Brake & Exploded Views

Section 5

BECAUSE YOU NEED A PARTNER, NOT JUST A PART.

FORD CARGO FRONT DISC BRAKE

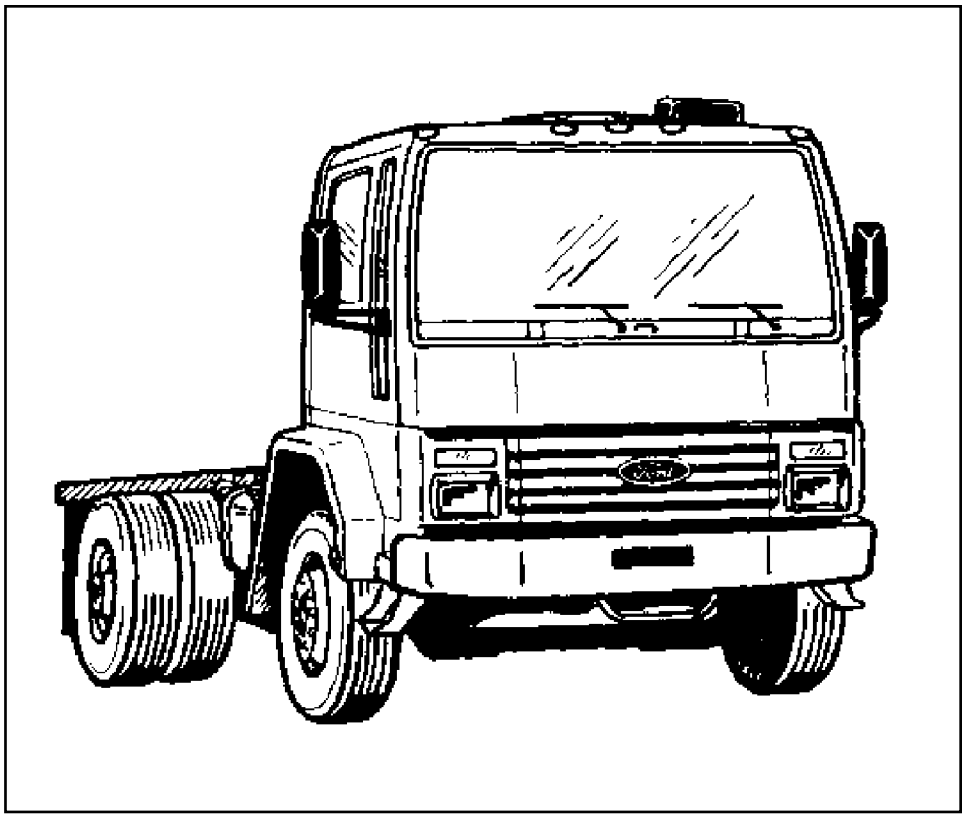

CF SERIES

Built in Sao Paulo, Brazil by Autolatina, the Brazilian joint venture between Volkswagen and Ford Motor Company. Was introduced into the United States in the Fall of 1985.

In 1991, Ford stopped importing the Cargo from Brazil and began building it in Louisville, Kentucky along with other model Ford trucks. Louisville Ford Cargos use Rockwell Air Brakes and Lucas Hydraulic Brakes.

FORD CARGO FRONT DISC BRAKE

INDEX OF BRAKE SYSTEM

MODEL AND YEAR	FRONT BRAKE			REAR BRAKE		
	SIZE	TYPE	PAGE	SIZE	TYPE	PAGE
CF 6000 — 26,500 lb. GVW						
July 1985 - 1991	73 mm	**Disc** Air Over Hydraulic Dual Piston	4-4	15" x 7"	**Drum** Air Over Hydraulic Automatic Adjustment	4-4
CF 7000 — 29,500 lb. GVW						
July 1985 - 1991	**STANDARD**					
	73 mm	**Disc** Air Over Hydraulic Dual Piston	4-4	15" x 7"	**Drum** Air Over Hydraulic Automatic Adjustment	4-4
	OPTIONAL					
	15" x 4"	**Drum** Full air S-Cam	—	16 1/2" x 7"	**Drum** Full air S-Cam	4-4
CF 8000 — 33,000 and 36,000 lb. GVW (Truck) 50,000 and 60,000 lb. GVW (Tractor Package Option)						
September 1987 - 1991	**STANDARD**					
	73 mm	**Disc** Air Over Hydraulic Dual Piston	4-4	15" x 7"	**Drum** Air Over Hydraulic Automatic Adjustment	4-4

FORD CARGO FRONT DISC BRAKE

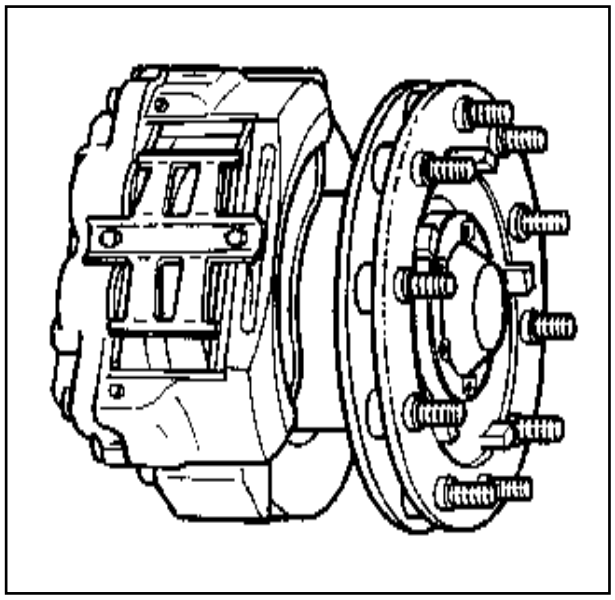

73mm DUAL PISTON AIR OVER HYDRAULIC

CF 6000 (July 1985 -1991)
With 9000 lb. rated Front Axles

CF 7000 (July 1985 - 1991)
With 12,000 lb. rated Front Axles

CF 8000 (September 1987 - 1991)
With 12,000 lb. rated Front Axles

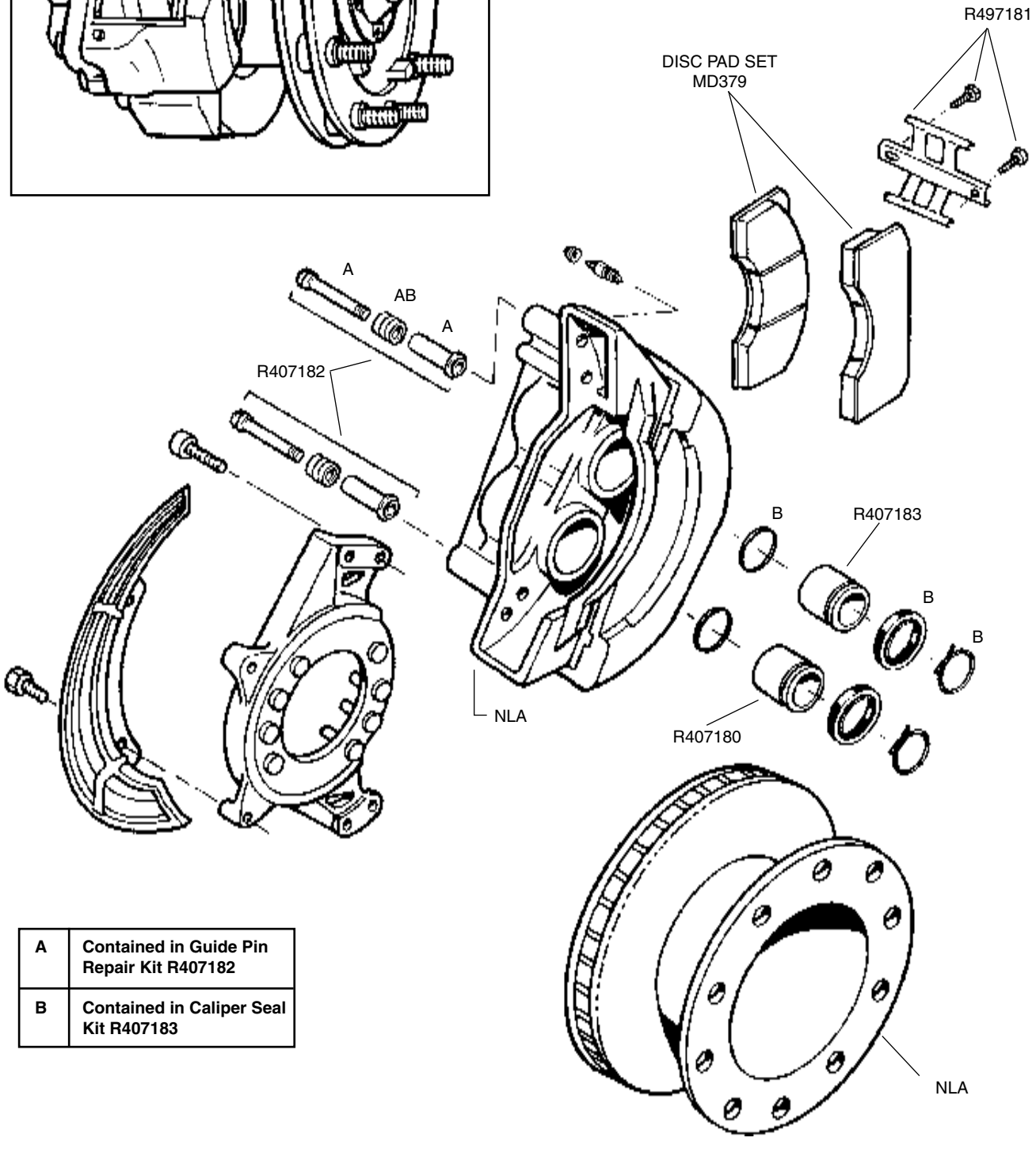

A	**Contained in Guide Pin Repair Kit R407182**
B	**Contained in Caliper Seal Kit R407183**

FORD CARGO FRONT DISC BRAKE

	MERITOR NO.	REPLACES	QTY. / AXLE
CALIPER PISTON 2.874" (73mm) Dia. Steel	**R407180**	Ford E6HZ-2120A	4
DISC PAD RETAINER KIT 	**R407181**	Ford E7HZ-2L296A Includes: 2 Retainer Plate 4 Guide Screw	1
GUIDE PIN REPAIR KIT 	**R407182**	Ford E6HZ-C150A Includes: 2 Guide Pin 2 Guild Sleeve 2 Dust Boot 1 Tube of Lubricant	2
CALIPER SEAL KIT 	**R407183**	Includes: 2 Square-cut Seal Ring 2 Dust Boot 2 Retaining Ring 2 Caliper Boot Seal 1 Tube of Lubricant	2
 R427179X Shown	NLA Left	Includes complete Caliper Assembly Caliper Casting No. VFCC 0005-1 Inlet and Bleed Part Sizes: 7/16"-24	1
	NLA Right	Includes complete Caliper Assembly Caliper Casting No. VFCC 2284-5 Inlet and Bleed Part Sizes: 7/16"-24	1
D379 **OUTER AND INNER BRAKE PAD** 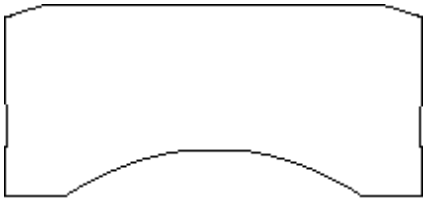 **(MOLDED)**	**MD379**	FMSI 7812-D327 7812-D379 7814-D379 Axle Set contains four integrally molded Disc Pads in Euclid E42 non-asbestos mix Nominal Thickness: 34mm (.945") (Disc Pad and Backing Plate) Backing Plate Length: 209mm (8.228") Wear Limit: 2mm (.079")	2

FORD CARGO REAR DRUM BRAKE 15" x 7"

AUTOMATIC ADJUSTMENT

FMSI LINING	FMSI SHOE	BRAKE SIZE
4528A	542	15" x 5"
4504A	543	15" x 6"
4505A	544	15" x 7"

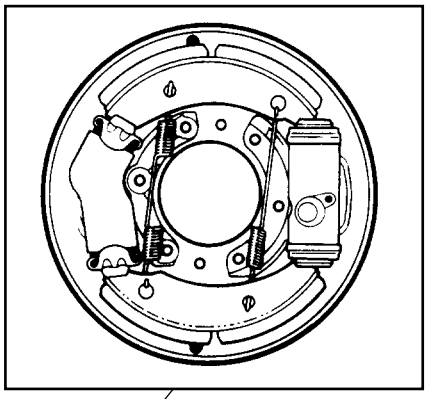

COMPLETE BACKING PLATE
SEE PAGE 4-37

BARE BACKING PLATE
29 1003 5" RH
29 1002 5" LH
29 1005 6" & 7" RH
29 1004 6" & 7" LH

CYLINDERS AND EXPANDERS
SEE PAGES 6-131

R407969 (SPRING KIT)

SP7862S RH
SP7861S LH

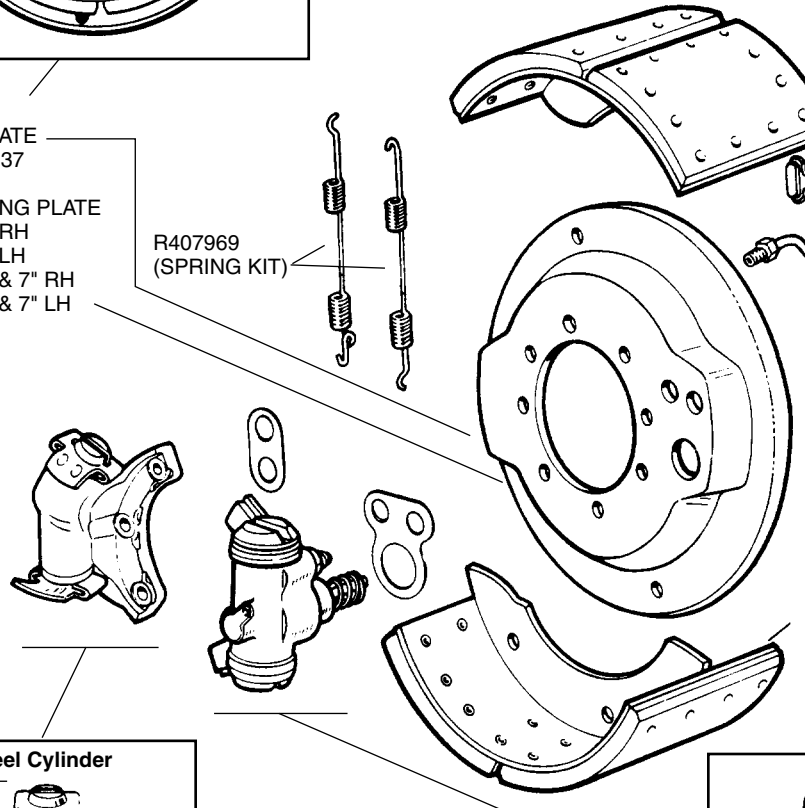

MERITOR UNLINED

SHOE	SIZE	FMSI NO.
451003	15" x 5"	4528A-542
451004	15" x 6"	4504A-543
451005	15" x 7"	4505A-544

Wheel Cylinder

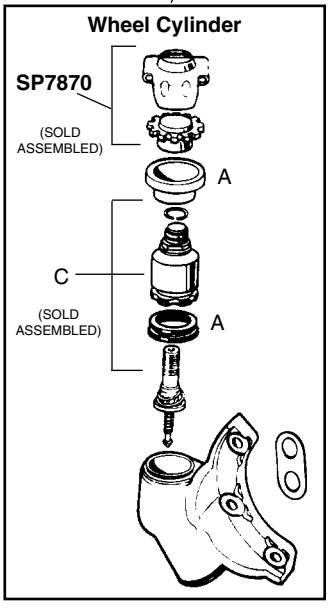

A	**Contained in Seal Kits (Services One Wheel) SP 7865 for 1 3/4" Wheel Cylinder and Expander**
B	**Contained in Expander Kits SP 7880S (RH) for 1 3/4" Dia. Expander SP 7879S (LH) for 1 3/4" Dia. Expander**
C	**Adjuster Assembly SP 7887S for 1 3/4" Dia. Wheel Cylinder**
D	**Contained in Expander Assembly SP 7920S**

Expander

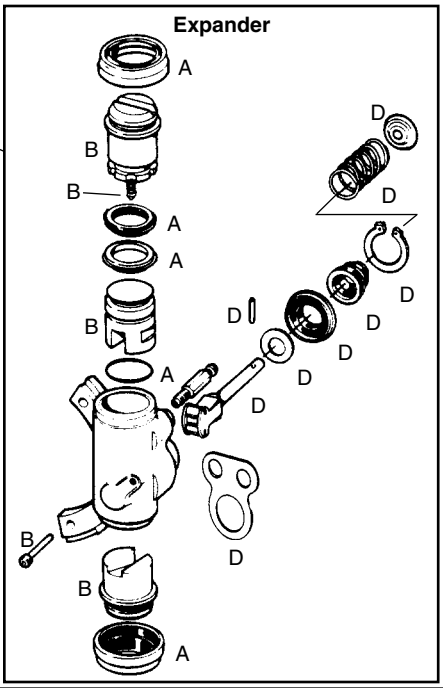

For Wheel Cylinder Applications see Vehicle Application Guide, beginning in Section 1

FORD CARGO REAR DRUM BRAKE 15" x 7"

Product Code 201

APPLICATION		KIT NUMBER
RETURN SPRING KIT **for** **LUCAS (FORD)** **15" x 5", 15" x 6", 15" x 7"** **Automatic Adjustment** **Rear Brake** Services One Axle	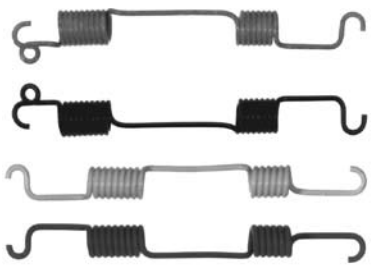	**MERITOR KIT R407969** Replaces Lucas (Ford) SP7896/ SP7897(New) SP7852/SP7853 (Old) Ford E4HZ-2296B/2297B (New) E4HZ-2296A/2297A (Old) Includes: 1 Green Spring } For LH Brakes 1 Orange Spring 1 White Spring } For RH Brakes 1 Yellow Spring
CROSS TUBE ASSEMBLIES **for** **LUCAS (FORD)** **15" x 5", 15" x 6", and 15" x 7"** **Rear Brake**		**MERITOR KIT SP 7862S** (RH) Replaces Lucas (Ford) SP7862 **MERITOR KIT SP 7861S** (LH) Replaces Lucas (Ford) SP7861
EXPANDER KIT **for** **LUCAS (FORD)** **15" x 6" and 15" x 7"** Use E-4057 LH E-4056 RH Services One Wheel		**MERITOR KIT SP 7879S** (LH) For 1 3/4" Dia. Expander Replaces Lucas (Ford) SP7855 Ford E4HZ-2C197A **MERITOR KIT SP 7880S** (RH) For 1 3/4" Dia. Expander Replaces Lucas (Ford) SP7856 Ford E4HZ-2C197B
MANUAL ADJUSTMENT OVERRIDE ASSEMBLY **for** **LUCAS (FORD)** **15" x 5", 15" x 6", and 15" x 7"** **Automatic Adjustment** **Rear Brake**		**MERITOR KIT SP 7870** Replaces Lucas (Ford) 68191307 Ford E4HZ-2C199A

(Continued on next page)

LUCAS BRAKE DRUMS

15.00" X 5"									
OVERALL DEPTH	BRAKE SURFACE WIDTH	PILOT DIA.	BOLT CIRCLE DIA.	BOLT HOLES		WEIGHT	PART NUMBER	FORD PART NUMBER	WHEEL TYPE
				NO.	SIZE				
6.59"	5.56"	9.44"	11.00"	5	0.66"	76	**85-120517-002**	F5HZ 1126 B	SPOKE
7.22"	5.50"	6.25"	8.75"	6	0.84"	74	**03-120553-002**	C8TZ 1126 E	DISC
8.02"	5.47 "	8.99"	10.83"	8	0.84"	71	**85-123332-002**	F0HZ 1126 C	DISC
15.00" X 6"									
OVERALL DEPTH	BRAKE SURFACE WIDTH	PILOT DIA.	BOLT CIRCLE DIA.	BOLT HOLES		WEIGHT	PART NUMBER	FORD PART NUMBER	WHEEL TYPE
				NO.	SIZE				
7.09"	6.50"	9.44"	11.00"	5	0.66"	78	**85-120516-002**	F5HZ 1126 A	SPOKE
8.79"	6.75"	8.99"	10.83"	8	0.84"	84	**85-123331-002**	F0HZ 1126 B	DISC
15.00" X 7"									
OVERALL DEPTH	BRAKE SURFACE WIDTH	PILOT DIA.	BOLT CIRCLE DIA.	BOLT HOLES		WEIGHT	PART NUMBER	FORD PART NUMBER	WHEEL TYPE
				NO.	SIZE				
8.51"	7.36"	10.50"	12.75"	5	0.78"	89	**85-122011-002**	F5HZ 1126 D	SPOKE
8.51"	7.36"	10.50"	12.75"	6	0.78"	90	**85-123203-002**	F5HZ 1126 F	SPOKE
10.18"	7.56"	8.70"	10.83"	8	0.85"	110	**85-123548-002**	F6HZ 1126 H	DISC
10.92"	7.50"	8.99"	10.83"	8	0.84"	96	**85-123276-002**	F0HZ 1126 A	DISC

LUCAS BRAKE SHOES

Size	FMSI	New Lined Shoe	Reman Lined Shoe	New Steel
15" x 5"	4528A-542	**SMA2124528**	**XSMA2124528L**	**451003**
15" x 6"	4504A-543	**SMA2124504**	**XSMA2124504L**	**451004**
15" x 7"	4505A-544	**SMA2124505**	**XSMA2124505L**	**451005**

FORD CARGO REAR DRUM BRAKE 15" x 7"

Product Code 201

APPLICATION		KIT NUMBER
AUTOMATIC ADJUSTER ASSEMBLY for LUCAS (FORD) 15" x 5" Use E-4060 **for LUCAS (FORD) 15" x 6" and 15" x 7"** Use E-4061 Services One Wheel		**MERITOR SP 7870** For 1 5/8" Dia. Wheel Cylinder Replaces Lucas (Ford) SP7870 Ford E4HZ-2C200B **MERITOR SP 7887S** For 1 3/4" Dia. Wheel Cylinder Replaces Lucas (Ford) SP7869 Ford E4HZ-2C200A
NEW STYLE "SLEEVED" EXPANDER WEDGE ASSEMBLY for LUCAS (FORD) Two Required to Service One Wheel		**MERITOR SP 7920S** For Meritor Expanders: 201181, 201182, 201179, 201180 Replaces Lucas (Ford) SP7920 Ford E6HZ-2B024A
SPRING BRAKE CHAMBER for LUCAS (FORD) Full Hydraulic Brake	R476120 R476120X	**FULL HYDRAULIC** **MERITOR** **R476120** (New) **R476120X** (Reman) Bleeder Kit **MQ5200** **AIR OVER HYDRAULIC** **MERITOR** **R477208** (New) **R477208X** (Reman) **NOTE:** Air/Hydraulic Unit has no Bleeder Ports. R477208 & R477208X not shown, will not have bleeder ports Replaces Midland MA15500
HR-1 HYDRAULIC RELAY VALVE **HPP-1 HYDRAULIC PUSH-PULL VALVE**	065060X 065077X	**HR-1 HYDRAULIC RELAY VALVE** • 1 7/8" UNS Exhaust Port • 1 7/16" UNF Delivery Port • 1 7/16" UNF Push Pull Delivery Port • 1 7/16" UNF Control Port • 1 9/16" Supply Port • 2 1/2" UNC Mounting Holes **HPP-1 HYDRAULIC PUSH-PULL VALVE** • 1 1/8" PT Supply Port • 2 1/8" PT Delivery Port • 1 1/8"-27" Exhaust Port

DURAPARK® 15" Diameter 5", 6", & 7" Widths

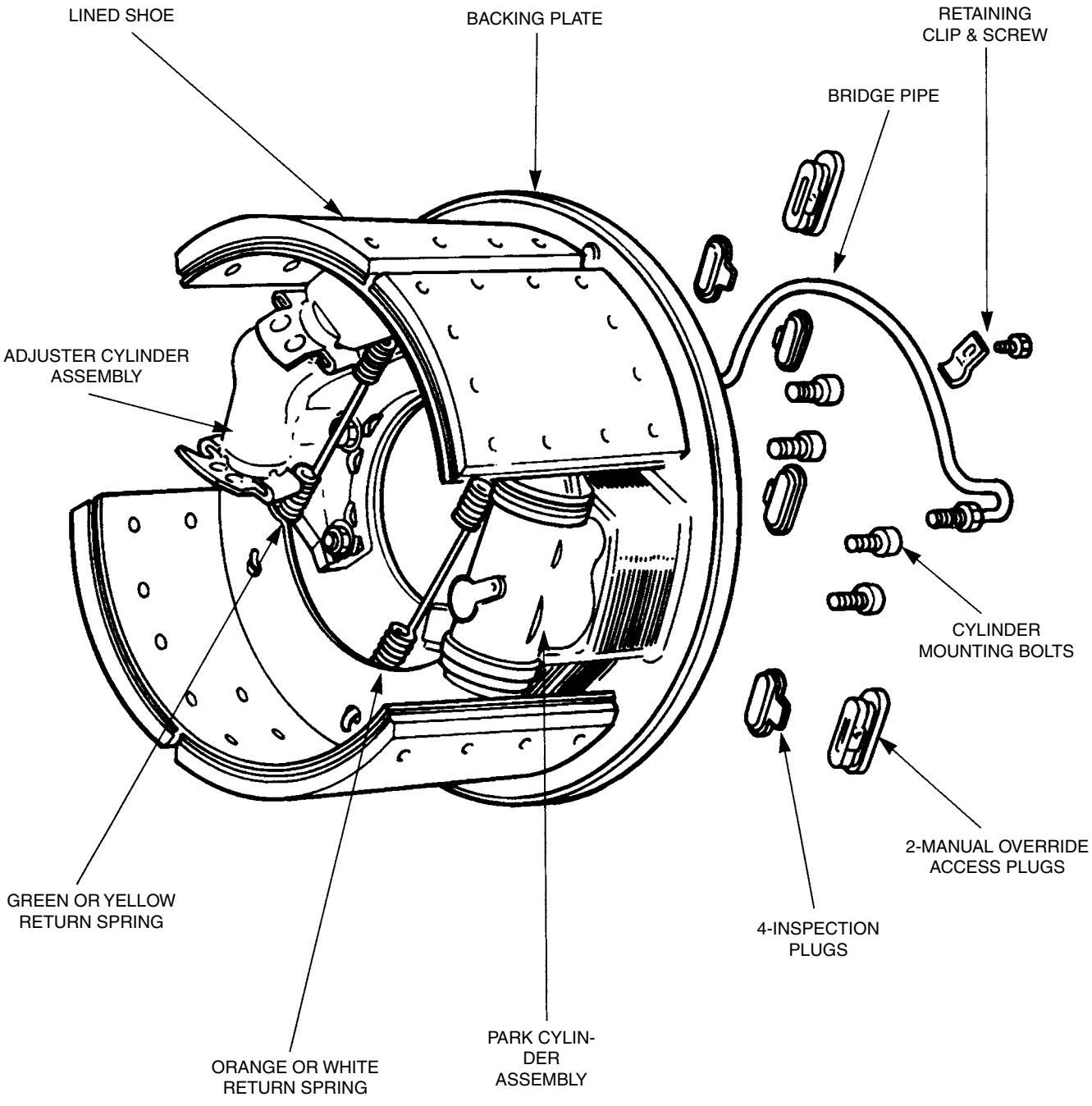

Brake Position	LH	RH
SPRING KIT (1) Green or Yellow Spring (1) Orange or White Spring	**SP7896S** SP7896 (green/orange)	**SP7897S** SP7897 (yellow/white)
The springs on the A2LS brakes have been redesigned and new spring kits created. The new springs simultaneously adjust the top and bottom during forward stops of the vehicle . Previously, the bottom shoe adjusted during forward stops and the top shoe during reverse stops. The top and bottom shoe adjustment during forward stops is accomplished by different spring tensions between the two springs on each brake. ***Initially, the new spring kits must be installed in Axle Sets (LH & RH wheels) in order to prevent automatic brake adjustment imbalance.***	**R407969** Complete axle kit includes both SP7896S & SP7987S **LH** **RH** 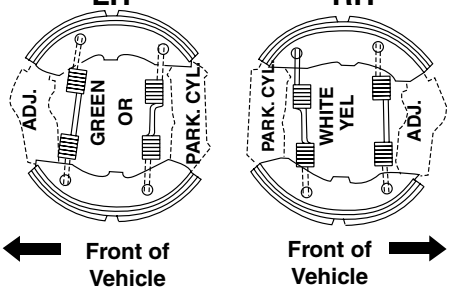 Front of Vehicle Front of Vehicle	
BRIDGE PIPE KIT (1) Bridge Pipe Assembly (1) Retaining Clip (1) Screw	**SP7861S** SP7861	**SP7862S** SP7862
PLUG KIT (2) M.O. Access Plugs (4) Inspection Plugs	**SP7860S** SP7860	
BACKING PLATE KIT 5" shoe width	**29 1002** 68919018	**29 1003** 68919019
BACKING PLATE KIT 6" & 7" shoe widths (1) Dirtshield (2) M.O. Access Plugs (1) Park Cylinder Gasket (4) Inspection Plugs (1) Adjuster Cylinder Gasket (4) Mounting Bolts	**29 1004** 68919020 (Illustration pg. 2-140)	**29 1005** 68919021
BOLT KIT, CYL. TO BACKPLATE	**SP7854S**	**SP7854**

Bore Size and Brake Position	1.75" R.H./L.H.	
SEAL KIT, WHEEL END (1) Seal kit, Adjuster Cylinder (1) Seal kit, Park Cylinder	**SP7873S** SP7873	

Brake Shoe and Lining Kits

Brake Size	Unlined Shoe (each)	Lined Shoe (each)
15 x 5"	**45 1003** 68937200	**SMA2124528**
15 x 6"	**45 1004** 68937201	**SMA2124504**
15 x 7"	**45 1005** 68937202	**SMA2124505**

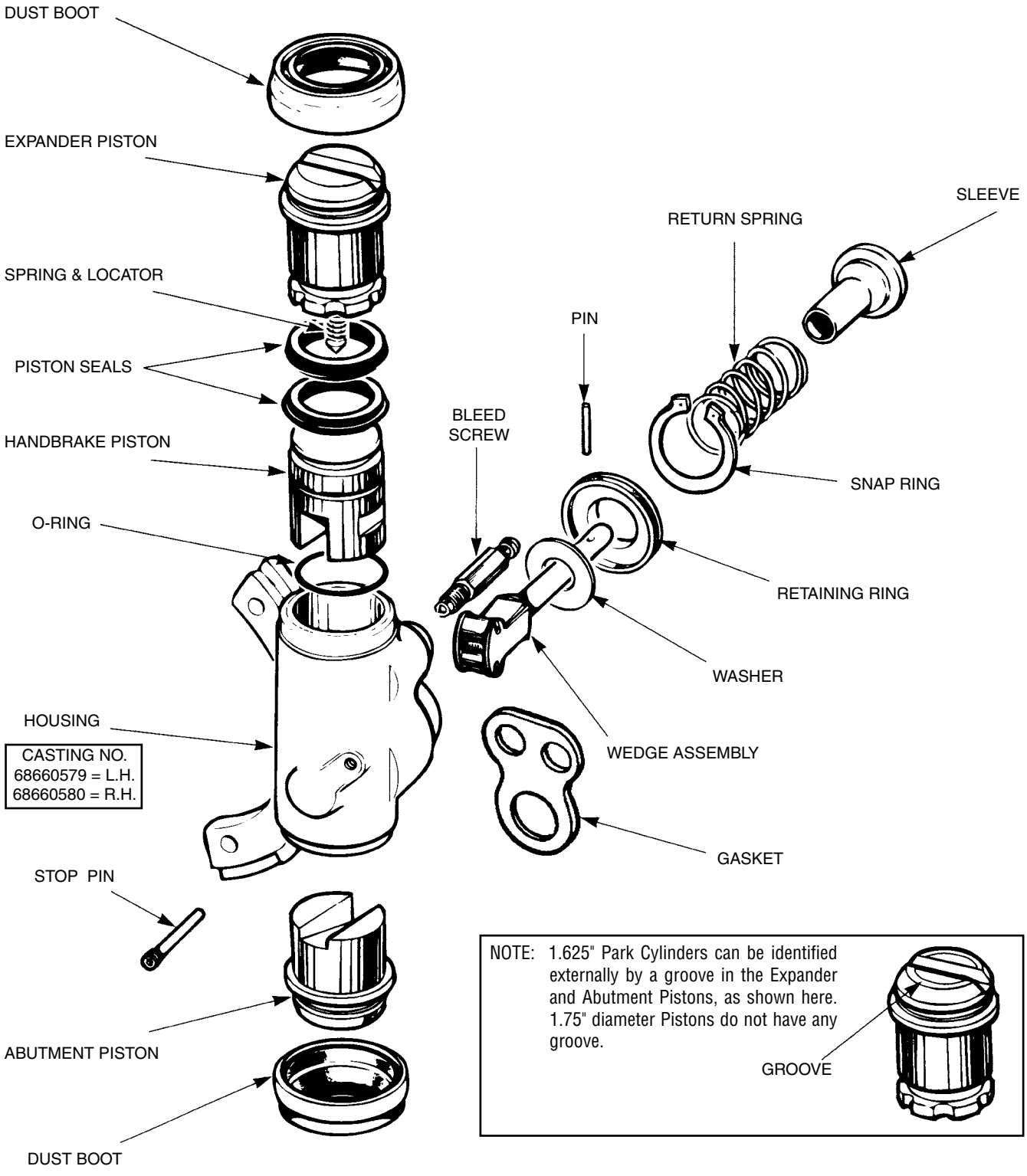

NOTE: 1.625" Park Cylinders can be identified externally by a groove in the Expander and Abutment Pistons, as shown here. 1.75" diameter Pistons do not have any groove.

Bore Size and Brake Position	1.75" LH	1.75" RH

Minor Overhaul Kits

SEAL KIT (1) Dust Boots (1) Retaining Ring (2) Hydraulic Seals (1) Gasket (1) O-Ring (1) Grease Pack	**SP7872S** SP7872	
DUST BOOT (2) Dust Boots (1) Grease Pack	**SP7889S** SP7889	
PORT INSERT	**29 1006** 68150036	
BLEED SCREW	**29 1001** 68660515	

Major Overhaul Kits

PISTON KIT (1) Expander Piston (1) Spring & Locator (1) Handbrake Piston (1) Stop Pin (1) Abutment Piston	**SP7879S** SP7879	**SP7880S** SP7880
WEDGE KIT (1) Wedge Assembly (1) Sleeve (1) Washer (1) Pin (1) Retaining Ring (1) Gasket (1) Snap Ring (1) Grease Pack (1) Return Spring	**SP7920S** SP7920	
HOUSING (1) Housing (2) Port Inserts (1) Bleed Screw	**29 1056** 68919052	**29 1057** 68919053
CYLINDER (1) Park Cylinder Assembly (1) Gasket (2) Bolts	**20 1179** 68919067 **20 1179X** Reman.	**20 1180** 68919068 **20 1180X** Reman.

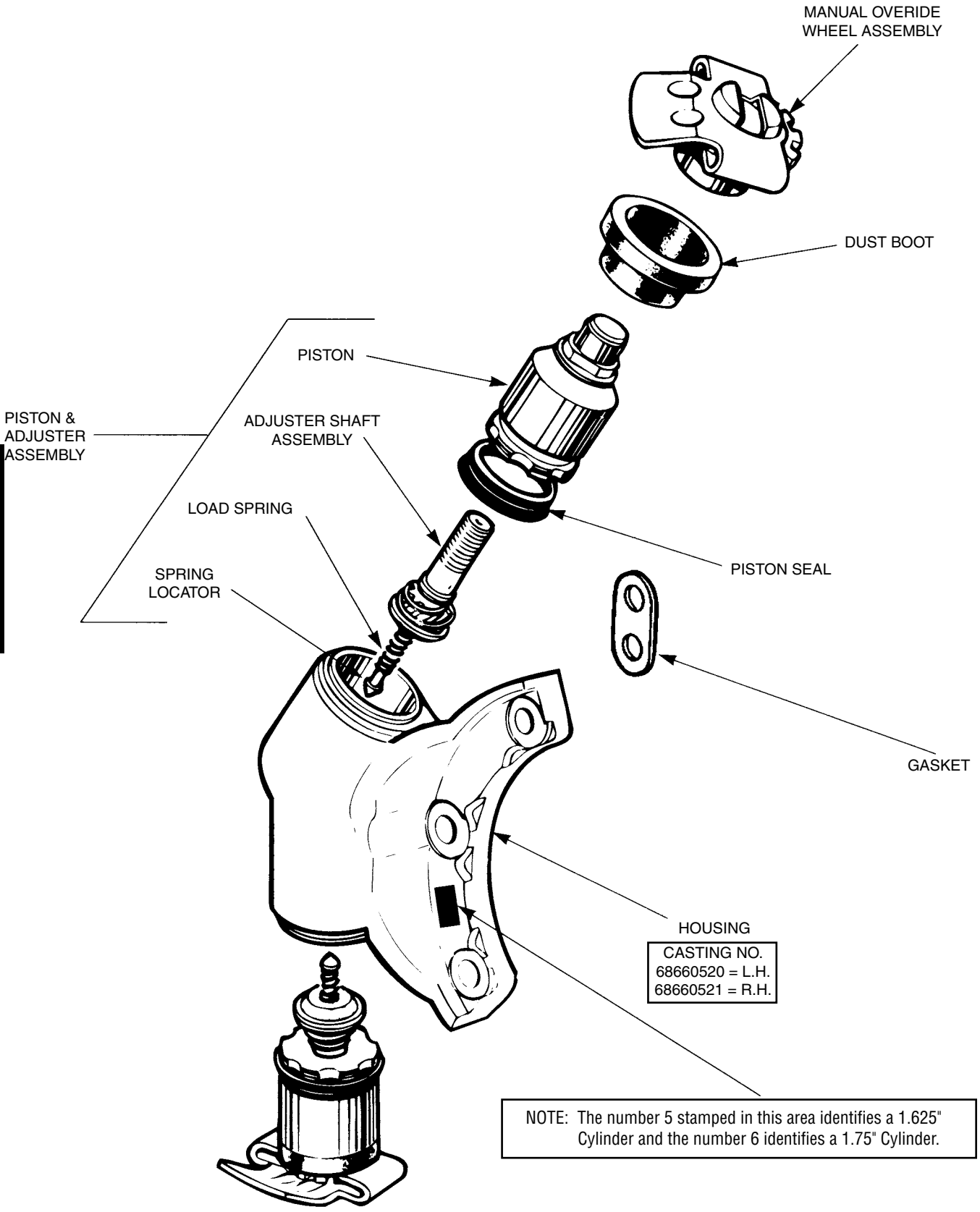

NOTE: The number 5 stamped in this area identifies a 1.625" Cylinder and the number 6 identifies a 1.75" Cylinder.

Adjuster Cylinder — SERVICE KITS

Bore Size and Brake Position	1.75" LH	1.75" RH
Minor Overhaul Kits		
SEAL KIT (2) Piston Seals (2) Dust Boots (1) Gasket (1) Grease Pack	**SP7871S** SP7871	
DUST BOOT (2) Dust Boots (1) Grease Pack	**SP7868S** SP7868	
PORT INSERT	**29 1000** 68191307	
MANUAL OVERIDE WHEEL	**29 1006** 68150036	
Major Overhaul Kits		
HOUSING (1) Housing (1) Port Insert	**29 1061** 68966097	**29 1062** 68966098
PISTON & ADJUSTER ASSEMBLY (1) Piston (1) Adjustment Shaft Assembly (1) Load Spring (1) Spring Locator	**SP7887S** SP7887	**SP7888S** SP7888
CYLINDER (1) Adjuster Cylinder Assembly (2) Manual Override Wheels (1) Gasket (2) Bolts	**20 1183** 68919071 **20 1183X** Reman.	**20 1184** 68919072 **20 1184X** Reman.

Meets FMVSS — 105 requirements for Automatic Adjustment

LUCAS GIRLING DRUM BRAKES
FORD TRUCKS CLASS 5, 6, 7

Heavy-Duty Return Spring Kits

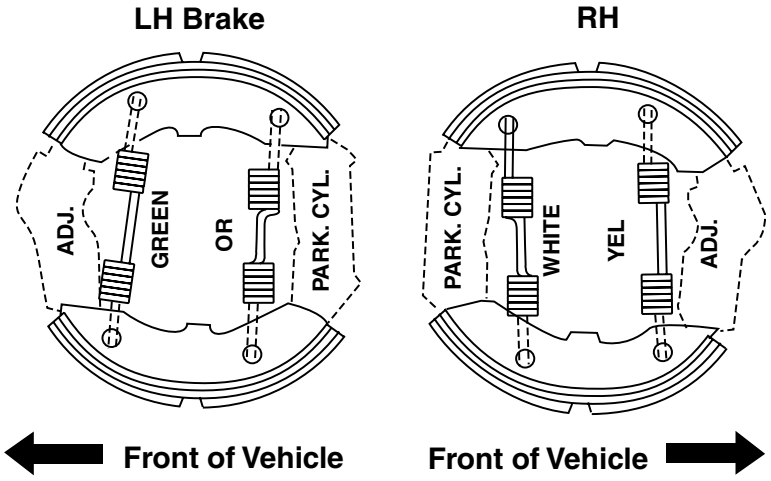

The springs on Lucas brakes have been redesigned and new spring kits created. The new springs simultaneously adjust the top and bottom during forward stops of the vehicle . Previously, the bottom shoe adjusted during forward stops and the top shoe during reverse stops.

The top and bottom shoe adjustment during forward stops is accomplished by different spring tensions between the two springs on each brake.

Initially, the new spring kits must be installed in Axle Sets (LH & RH wheels) in order to prevent automatic brake adjustment imbalance.

These new springs are being introduced as a running interchangeable change.

Kit Description	Kit #
Spring Kit	**R40H618**

ARROWS INDICATE TOOL MOVEMENT

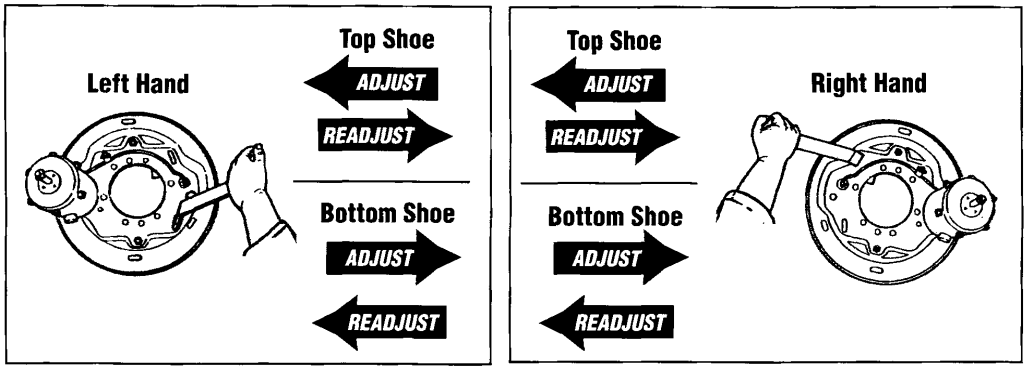

LUCAS BACKING PLATE ASSEMBLIES

(Left Hand Assembly shown)	MERITOR NO.	BACKING PLATE OVERALL DEPTH	APPLICATION
Front of Vehicle Assembly includes backing plate, wheel cylinder, expander, two return springs, cross tube, and all rubber inspection plugs.	**79919003** (New) **R429422X** (Reman)	2 1/2"	Left Hand Assembly with 1 3/4" Wheel Cylinder and Expander for 6" and 7" Brakes
	79919004 (New) **R429423X** (Reman)	2 1/2"	Right Hand Assembly with 1 3/4" Wheel Cylinder and Expander for 6" and 7" Brakes
	79919005 (New) **R429424X** (Reman)	1 1/2"	Left Hand Assembly with 1 3/4" Wheel Cylinder and Expander for 5" Brakes **Important Note:** The 1 3/4" assembly is a retrofit for the 1 5/8" assembly, usually used on the 15" x 5" brake. When retrofitting to 1 3/4", you must do both wheel ends on a single rear axle. Retrofitting should never be done on a tandem rear axle using 1 5/8" assemblies.
	79919006 (New) **R429425X** (Reman)	1 1/2"	Right Hand Assembly with1 3/4" Wheel Cylinder and Expander for 5" Brakes **Important Note:** The 1 3/4" assembly is a retrofit for the 1 5/8" assembly, usually used on the 15" x 5" brake. When retrofitting to 1 3/4", you must do both wheel ends on a single rear axle. Retrofitting should never be done on a tandem rear axle using 1 5/8" assemblies.
	68021279NPI (New) **68021279X** (Reman)	1 3/4"	Left Hand New Backing Assembly with Shoes. 15" x 5" x 1.75" 55.93 lbs.
	68021280NPI (New) **68021280X** (Reman)	1 3/4"	Right Hand New Backing Assembly with Shoes. 15" x 5" x 1.75" 55.93 lbs.
	68021281NPI (New) **68021281X** (Reman)	1 3/4"	Left Hand New Backing Assembly with Shoes. 15" x 6" x 1.75" 58.70 lbs.
	68021282NPI (New) **68021282X** (Reman)	1 3/4"	Right Hand New Backing Assembly with Shoes. 15" x 6" x 1.75" 58.70 lbs.
	68021283NFP (New) **68021283X** (Reman)	1 3/4"	Left Hand New Backing Assembly with Shoes. 15" x 7" x 1.75" 61.73 lbs.
	68021284NFP (New) **68021284X** (Reman)	1 3/4"	Right Hand New Backing Assembly with Shoes. 15" x 7" x 1.75" 61.73 lbs.

HINO HYDRAULIC DISC BRAKE

HINO										
Vehicle Type and Year	Front Brake					Rear Brake				
	Size	Shoes	Hardware	Wheel Cylinder	Drum	Size	Shoes	Hardware	Wheel Cylinder	Drum
FA Series Class 4 Vehicle GVW Rating 15,000 lb.										
1989 - 1993	320mm x 75mm	R46683	R412212662	R412012671 L/H R412912562 R/H	R442712660	320mm x 75mm	R46683	R412212662	R412012675 L/H Front R412012676 L/H Rear R412012677 R/H Front R412012678 R/H Rear	R442712667
1994 - 1997	320mm x 75mm	R46683	R412212662	R412012673 L/H R412012674 R/H	R46683	320mm x 75mm	R46683	R412212662	N/A	R442712667
1998 - 1999	320mm x 110mm	R46684	R412212663	N/A	R442712661	320mm x 125mm	R46685	R412212670	N/A	R442712668
2000 - 2001	320mm x 110mm	R46684	R412212663	N/A	R442712661	320mm x 125mm	R46685	R412212670	N/A	R442712669
FB Series Class 5 Vehicle GVW Rating 17,600 lb.										
1989 - 1990	320mm x 75mm	R46683	R412212662	R412012680 L/H R412012681 R/H	R442712660	320mm x 75mm	R46683	R412212662	N/A	R442712667
1989 - 1990	320mm x 110mm	R46684	R412212663	N/A	R442712661	320mm x 125mm	R46685	R412212670	N/A	R442712679
1991 - 2001	320mm x 110mm	R46684	R412212663	N/A	R442712661					
1991 - 1997						320mm x 125mm	R46684	R412212663	N/A	R442712679
1998 - 1999						320mm x 125mm	R46684	R412212663	N/A	R442712668
2000 - 2001							N/A	N/A	N/A	R442712669
FD Series Class 6 Vehicle GVW Rating 22,300 lb. (Air Over Hydraulic Brake System)										
FD 17 Series 1990 - 1991	320mm x 110mm	R46684	R412212663	R412012682 L/H R412012683 R/H	N/A	320mm x 125mm	R46685	R412212670	R412012684 L/H Front R412012685 L/H Rear R412012686 R/H Front R412012687 R/H Rear	N/A
FD 20 Series 1991 - 1992	320mm x 110mm	R46684	R412212663	R412012682 L/H R412012683 R/H	N/A	320mm x 125mm	R46685	R412212670	R412012684 L/H Front R412012685 L/H Rear R412012686 R/H Front R412012687 R/H Rear	N/A
FD 2J Series 1999 - 2001	320mm x 110mm	R46684	R412212663	N/A	N/A	320mm x 125mm	R46685	R412212670	N/A	N/A
FD 5H Series 1993 - 1997	320mm x 110mm	R46684	R412212663	R412012682 L/H R412012683 R/H	N/A	320mm x 125mm	R46685	R412212670	R412012684 L/H Front R412012685 L/H Rear R412012686 R/H Front R412012687 R/H Rear	N/A
FE, FF Series Class 6 - 7 Vehicle GVW Rating 25,995 - 30,000 lb. (Air Over Hydraulic Brake System)										
FE, FF 17, 19 Series 1989	320mm x 110mm	R46684	R412212663	R412012689 L/H R412012690 R/H	N/A	N/A	N/A	N/A	R412012692 L/H Front R412012693 L/H Rear R412012694 R/H Front R412012695 R/H Rear	N/A

HINO HYDRAULIC DISC BRAKE

HINO										
Vehicle Type and Year	Front Brake					Rear Brake				
	Size	Shoes	Hardware	Wheel Cylinder	Drum	Size	Shoes	Hardware	Wheel Cylinder	Drum
GC Series Class 6 - 7 Vehicle GVW Rating 25,995 - 30,000 lb. (Air Over Hydraulic Brake System)										
GC 17 Series 1990 - 1991	320mm x 110mm	R46684	R412212663	R412012682 L/H R412012683 R/H	N/A	320mm x 125mm	R46685	R412212670	R412012684 L/H Front R412012685 L/H Rear R412012686 R/H Front R412012687 R/H Rear	N/A
GC 20 Series 1/91 - 1992	320mm x 110mm	R46684	R412212663	N/A	N/A	320mm x 125mm	R46685	R412212670	R412012684 L/H Front R412012685 L/H Rear R412012686 R/H Front R412012687 R/H Rear	N/A

Brake Type	Designation	Type	Front Brake				Rear Brake			
			Rotor	Caliper	Disc Pads	Page	Rotor	Caliper	Disc Pads	Page
145 Series Truck Class 4 Vehicle GVW Rating 15,000 lb. 2003 - 2006										
11.97" Front & Rear Disc Brakes	L/H	ABS	23-123618-002	R4212300	MDP5040	Group 1	23-123626-002	R4212300	MDP5040	Group 1
	R/H			R4212301				R4212301		
165 Series Truck Class 4 Vehicle GVW Rating 16,000 lb. 2002 - 2006										
11.97" Front & Rear Disc Brakes	L/H	ABS	23-123618-002	R4212300	MDP5040	Group 1	23-123626-002	R4212300	MDP5040	Group 1
	R/H			R4212301				R4212301		
185 Series Truck Class 5 Vehicle GVW Rating 18,000 lb. 2002 - 2006										
12.756" Front Disc & 15.375 Rear Disc Brakes	L/H	ABS	23-123625-002	R4212298	MDP5040	Group 1	23-123617-002	60450481	MD769	Group 1
	R/H			R4212299				60450480		
238 Series Truck Class 6 Vehicle GVW Rating 23,000 lb. 2002 - 2006										
15.375" Front Disc & Rear Disc Brakes	L/H	ABS	23-123557-002	60450481	MD769	Group 1	23-123557-002	60450483	MD769	Group 1
	R/H			60450480				60450482		
258LP Series Truck Class 6 Vehicle GVW Rating 25,500 lb. 2002 - 2006										
15.375" Front Disc & Rear Disc Brakes	L/H	ABS		60450481	MD769	Group 1		60450483	MD769	Group 1
	R/H			60450480				60450482		
268 Series Truck Class 7 Vehicle GVW Rating 29,950 lb. 2002 - 2006										
15.375" Front Disc & Rear Disc Brakes	L/H	ABS	23-123557-002	60450481	MD769	Group 1	23-123557-002	60450483	MD769	Group 1
	R/H			60450480				60450482		

HINO HYDRAULIC DISC BRAKE

WITH 12.756" ROTORS

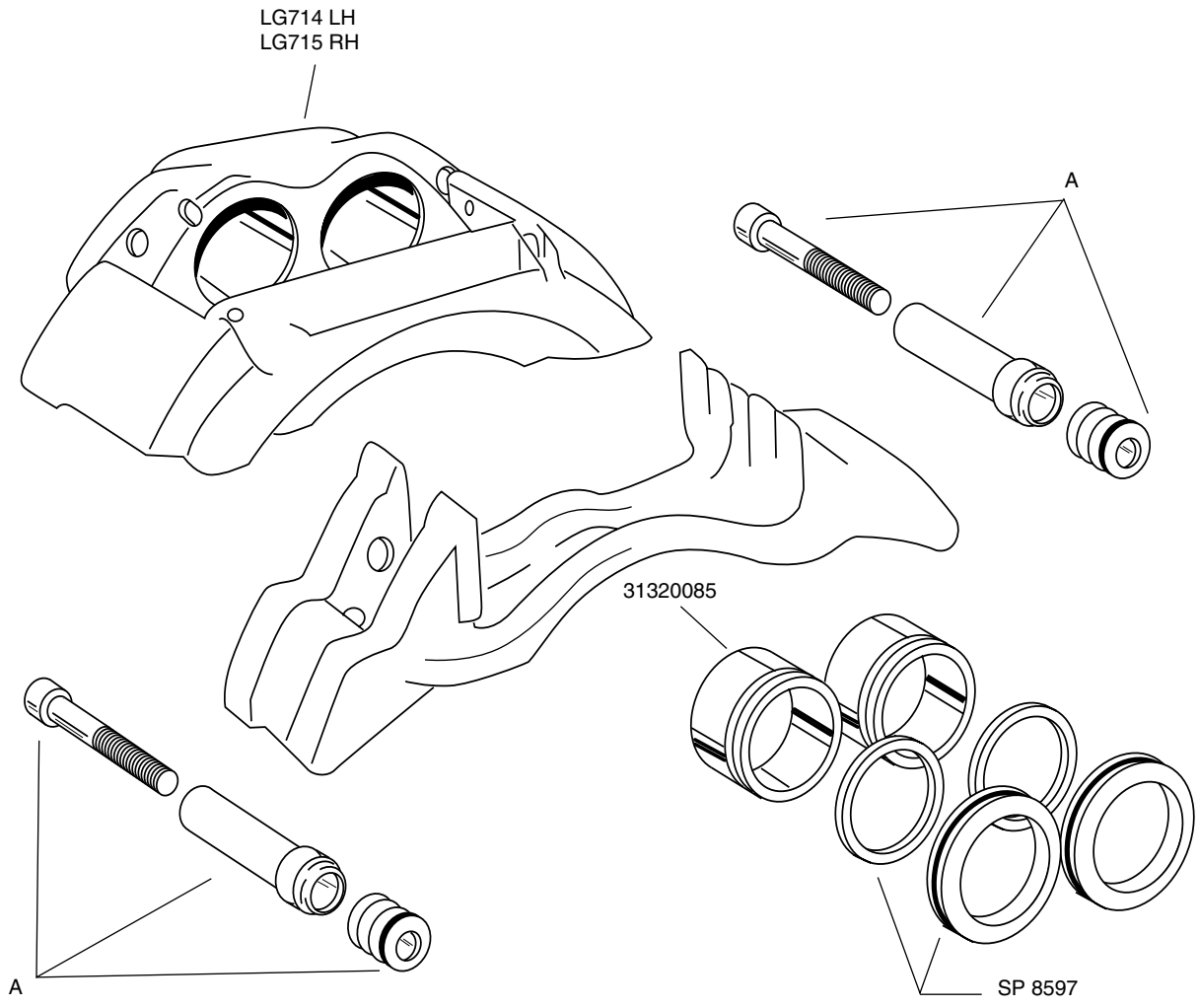

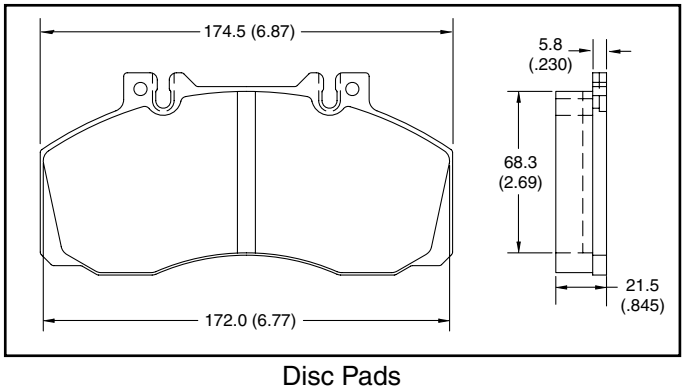

Disc Pads
FMSI D1062 • MDP5094

A	**SJ1035** **Guide Pin Kit**

HINO HYDRAULIC DISC BRAKE

GUIDE PIN KIT	MERITOR NO.	REPLACES
	SJ1035	2 Guide Pin 68130045 2 Boots 68320057 2 End Cover 68320555 2 Sleeve 68320554 2 Grease 32932966
GUIDE PIN BOOT KIT		
	SP 8566	2 Boots 68320057 2 Grease 32932966 2 Grease 68966041
CALIPER PISTON		
60MM	**31320085**	Meritor 31320085
OUTER AND INNER BRAKE PAD		
D1062 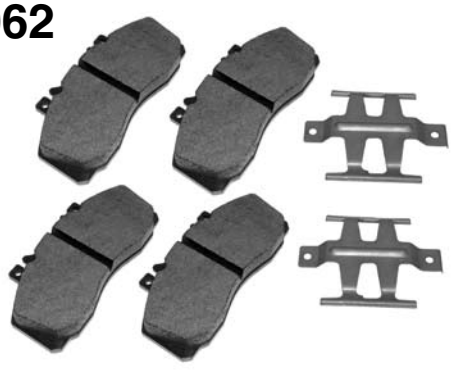	**MDP5094** **MD1062**	Meritor 69210823 60050314 Retaining Plate 31320219 FMSI D1062

HINO HYDRAULIC DISC BRAKE

4 x 64MM Quadraulic
Phenolic Piston
7/16"-24 Inlet

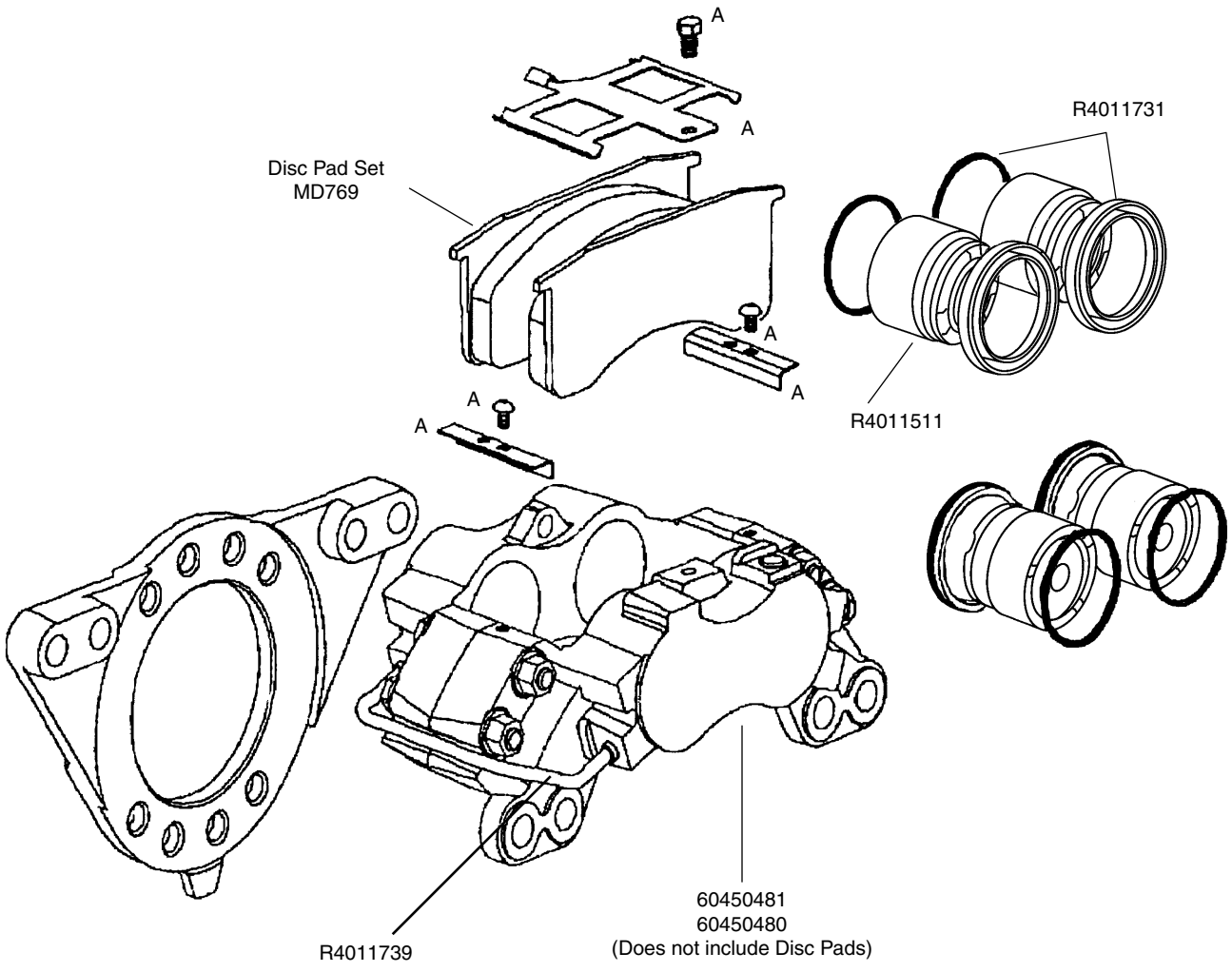

Note: See Qualdraulic Disc Brake ID Chart page 5-64 in the Calipers section on how to ID.

A	**Contained in Hardware Kit R4011729**

60450481004
60450480004
Contains Disc Pad Kit
KITD769GM

HINO HYDRAULIC DISC BRAKE

	MERITOR NO.	REPLACES
HARDWARE KIT Services One Wheel 	**R4011729**	Meritor 1 69160483 (Anti-Rattle Spring) 1 69310818 (Bolt) 2 69330709 (Lining Spacer) 2 69310819 (Lining Spacer Bolt)
BOOT AND SEAL KIT 	**R4011731** (64MM)	Meritor 69170343 (Seal) 69340647 (Boot)
CALIPER PISTON 64MM Dia.	**R4011511** (64MM)	Meritor 69260551 (Piston) 69330719 (Heat Shield)
D769 **OUTER AND INNER BRAKE PAD** 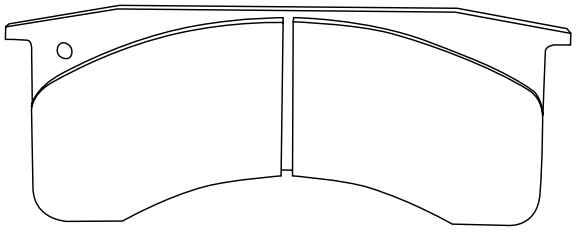	**MD769** **MMD769** **MVD769** **KITD769AM** **KITD769GM**	KITD769AM FMSI 7636-D769 **Note:** FMSI 7636D1032 is the same as 7636D769. The lining did not change. While the backing plates are the same dimension, the D1032 plate includes a lug used to attach a squealer tab required by some OEMs. The existing Meritor MD769 Stopmate disc pads already meet this requirement.

HINO HYDRAULIC DISC BRAKE

4 x 70MM Quadraulic
Phenolic Piston
7/16"-24 Inlet

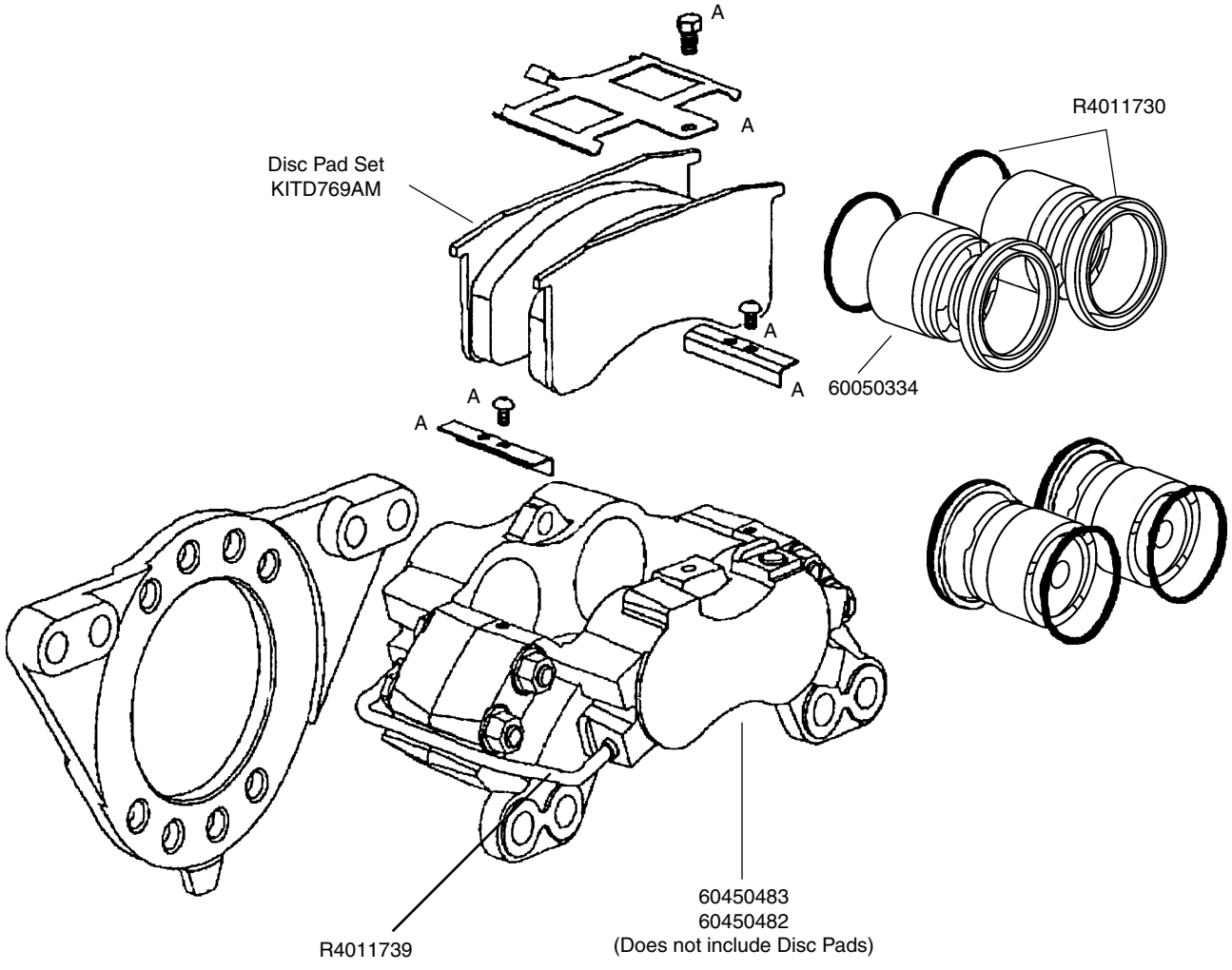

Note: See Qualdraulic Disc Brake ID Chart page 5-54 in the Calipers section on how to ID.

A	**Contained in Hardware Kit R4011729**

60450483004
60450482004
Contains Disc Pad Kit
KITD769GM

HINO HYDRAULIC DISC BRAKE

	MERITOR NO.	REPLACES
HARDWARE KIT Services One Wheel 	**R4011729**	Meritor 1 69160483 (Anti-Rattle Spring) 1 69310818 (Bolt) 2 69330709 (Lining Spacer) 2 69310819 (Lining Spacer Bolt)
BOOT AND SEAL KIT 	**R4011730**	Meritor 4 69340646 (Boot) 4 69170337 (Seal)
CALIPER PISTON 70MM Dia.	**60050334** Phenolic	Meritor 1 69260549 (Piston)
D769 **OUTER AND INNER BRAKE PAD** 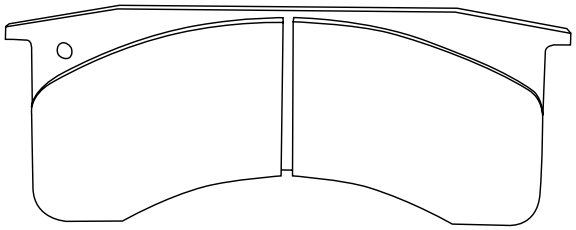	**MD769** **MVD769** **MMD769** **KITD769AM** **KITD769GM**	**KITD769AM** FMSI 7636-D769 **Note:** FMSI 7636D1032 is the same as 7636D769. The lining did not change. While the backing plates are the same dimension, the D1032 plate includes a lug used to attach a squealer tab required by some OEMs. The existing Meritor MD769 disc pads already meet this requirement.

ISUZU (CHEVROLET/GM)

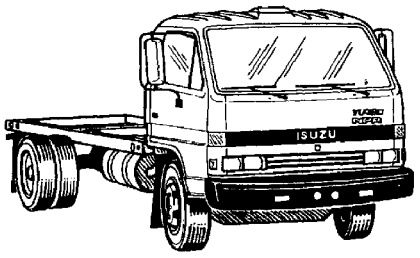

NPR/

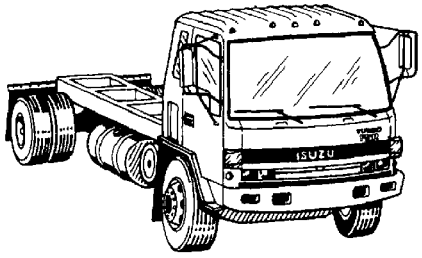

FSR/

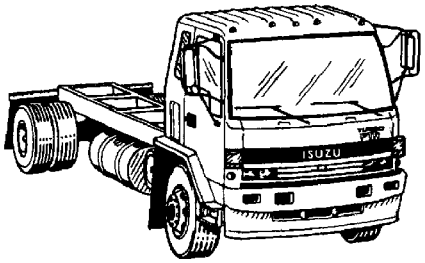

FTR/

NPR, FSR and FTR MODELS

Built in Fujisawa, Japan by Isuzu Motors, Ltd. In 1984, Isuzu Truck of America was founded and introduced Isuzu trucks into the United States.

ISUZU (CHEVROLET/GM)

MODEL AND YEAR	FRONT BRAKE			REAR BRAKE		
	TYPE	SIZE		TYPE	SIZE	
FRR / W5 - 18,000 lb to 19,500 lb GVW						
FRR 2/94 - 6/97	Drum	320mm x 110mm		Drum	320mm x 145mm	
FRR 7/97 - 1/99	Drum			Drum		
FRR 2/99 - 2004	Drum			Drum		
FSR / W6 - 23,000 lb to 25,000 lb GVW						
FSR 9/86 - 11/89	Drum	400mm x 115mm	Currently No Illustrated View. See Application Section of Catalog.			Currently No Illustrated View. See Application Section of Catalog.
FSR 9/86 - 5/90				Drum	410mm x 115	
FSR 12/89 - 12/93 Low Deck Model	Drum	370mm x 100mm		Drum	370mm x 135mm	
FSR 12/89 - 12/93 Except Low Deck Model	Drum	400mm x 115mm		Drum	410mm x 115	
FSR 1/94 - 1996	Drum	400mm x 115mm		Drum	410mm x 115	
FSR 3/96 - 2002 with 8100lb FA and Dayton Caliper	Disc	Caliper 60050150 Twin Piston 2.50” dia				
FSR 3/96 - 2002 with 11000, 12000lb FA and Bendix Caliper	Disc	Caliper R4255250 Twin Piston 2.88” dia				
FSR 3/96 - 2/98				Disc	Caliper 60050150 Twin Piston 2.50" dia	
				Disc	Caliper R4255250 Twin Piston 2.88" dia	
FSR 3/98 - 2002				Disc	Caliper 60050150 Twin Piston 2.50" dia	
				Disc	Caliper R4255250 Twin Piston 2.88" dia	
				Disc	Caliper 6005032 / 60450454 4 piston 70mm dia.	
					Caliper 60050321 / 60450455 4 piston 70mm dia.	
FTR / W7- 25,950 lb. to 30,000 lb GVW						
FTR 9/86 - 12/93	Drum	410mm x 140mm Air Over Hydraulic	Group 6	Drum	410mm x 140mm Air Over Hydraulic	Group 6
FTR 1/94 - 9/94	Drum	410mm x 140mm Air Over Hydraulic - Auto adjust	Currently No Illustrated View. See Application Section of Catalog.	Drum	410mm x 140mm Air Over Hydraulic - Auto adjust	Currently No Illustrated View. See Application Section of Catalog.
		410mm x 140mm Air Over Hydraulic - Manual adjust	Group 6		410mm x 140mm Air Over Hydraulic - Manual adjust	Group 6
FTR 10/94 - 1996	Drum	410mm x 140mm Air Over Hydraulic	Currently No Illustrated View. See Application Section of Catalog.	Drum	410mm x 140mm Air Over Hydraulic	Currently No Illustrated View. See Application Section of Catalog.
FTR 3/96 - 2002	Disc	Caliper 60050150 Twin Piston 2.50” dia				
		Caliper R4255250 Twin Piston 2.88” dia				

ISUZU (CHEVROLET/GM)

MODEL AND YEAR	FRONT BRAKE			REAR BRAKE		
	TYPE	SIZE		TYPE	SIZE	
FTR 4/03 - 2004	Disc	Caliper 60050320 / 60450454 4 piston 70mm dia.				
		Caliper 60050321 / 60450455 4 piston 70mm dia.				
FTR 3/96 - 2-98				Disc	Caliper 60050150 Twin Piston 2.50" dia	
					Caliper R4255250 Twin Piston 2.88" dia	
FTR 3/98 - 2002				Disc	Caliper 60050150 Twin Piston 2.50" dia	
					Caliper R4255250 Twin Piston 2.88" dia	
					Caliper 60050320 / 60450454 4 piston 70mm dia.	
					Caliper 60050321 / 60450455 4 piston 70mm dia.	
FVR / W7, FXR - 33,000 lb. GVW						
FVR, FXR 3/98 - 2002	Disc	Caliper 60050150 Twin Piston 2.50" dia		Disc	Caliper 60050150 Twin Piston 2.50" dia	
		Caliper R4255250 Twin Piston 2.88" dia			Caliper R4255250 Twin Piston 2.88" dia	
FVR, FXR 4/03 - 2004	Disc	Caliper 60050320 / 60450454 4 piston 70mm dia.		Disc	Caliper 60050320 / 60450454 4 piston 70mm dia.	
		Caliper 60050321 / 60450455 4 piston 70mm dia.			Caliper 60050321 / 60450455 4 piston 70mm dia.	
KS22, KS32 - 11,500 lb. GVW						
KS22, KS32 6/84 - 7/85	Drum	320mm x 75mm Manual Adjust		Drum	320mm x 75mm Manual Adjust	
NPR / W35-45	Chassis Cab Gasoline 12,050 - 14,050 lb. GVW					
	Chassis Cab Diesel 12,000 - 14,500 lb. GVW					
	Crew Cab Chassis Cab 14,500 - 17,950 lb. GVW					
NPR 1986	Drum	320mm x 75mm		Drum	320mm x 75mm	
NPR 1987 - 8/88	Drum	320mm x 75mm		Drum	320mm x 75mm	
NPR 9/88 - 12/90	Drum	320mm x 75mm		Drum	300mm x 75mm - Flat Low	
NPR 1/91 - 11/93	Drum	320mm x 75mm 11,000, 13,000 lb Axle				
NPR 1/91 - 11/93	Drum	320mm x 100mm 14,000 lb Axle				
NPR 9/88 - 11/93				Drum	300mm x 75mm - Flat Low	
				Drum	320mm x 75mm 11, 000 lb Axle - exc Flat Low	
				Drum	320mm x 100mm 13,000, 14,250 lb. Axles	
NPR 8/87 - 9/97	Disc with Gas Engine	54mm Caliper				

ISUZU (CHEVROLET/GM)

MODEL AND YEAR	FRONT BRAKE			REAR BRAKE		
	TYPE	SIZE		TYPE	SIZE	
NPR 10/97 - 1/99 Class 4 HD Vehicles	Disc with Gas Engine	57mm Caliper				
NPR 2/99 - 6/99 Class 3 Vehicles	Disc with Gas Engine	54mm Caliper				
NPR 10/97 - 1/99 Class 4 HD Vehicles	Disc with Gas Engine	57mm Caliper				
NPR 10/97 - 1/99 Class 4 HD Vehicles With Out ABS	Disc with Gas Engine	57mm Caliper				
NPR 10/97 - 1/99 Class 4 HD Vehicles With ABS	Disc with Gas Engine	57mm Caliper				
NPR 7/99 - 2004 Class 3 Vehicles	Disc with Gas Engine	54mm Caliper				
NPR 7/99 - 2004 Class 4 HD Vehicles	Disc with Gas Engine	57mm Caliper				
NPR 8/87 - 8/88	Disc with Gas Engine			Drum	320mm x 75mm	
NPR 9/88 - 11/93	Disc with Gas Engine			Drum	300mm x 75mm Flat Low	
				Drum	320mm x 100mm 13,000, 14,000 lb. Axles	
				Drum	320mm x 75mm 11,000 lb. Axle exc Flat Low	
NPR 12/93 - 8/94	Disc with Gas Engine			Drum	320mm x 75mm 11,000 lb. Axle	
				Drum	320mm x 100mm 13,000, 14,000 lb. Axles	
NPR 9/94 - 9/97	Disc with Gas Engine			Drum	320mm x 75mm exc 13,250 lb. Axle	
				Drum	320mm x 75mm 13,250 lb. Axle	
NPR 10/97 - 6/01 Class 3 Vehicle	Disc with Gas Engine			Drum	320mm x 75mm	
NPR 10/97 - 6/01 Class 4 HD Vehicle	Disc with Gas Engine			Drum	311.2mm x 121.9mm	Currently No Illustrated View. See Application Section of Catalog.
NPR 7/01 - 2004 Class 3 Vehicle	Disc with Gas Engine			Drum	320mm x 100mm	Group 3
NPR 7/01 - 2004 Class 4 HD Vehicle	Disc with Gas Engine			Drum	311.2mm x 121.9mm	
NPR 8/87 - 12/97	Disc with Diesel Engine	54mm Caliper				

ISUZU (CHEVROLET/GM)

MODEL AND YEAR	FRONT BRAKE			REAR BRAKE		
	TYPE	SIZE		TYPE	SIZE	
NPR 1/98 - 12/03	Disc with Diesel Engine	54mm Caliper				
NPR 1/04 - 2005	Disc with Diesel Engine	54mm Caliper				
NPR 8/87 - 8/88	Disc with Diesel Engine			Drum	320mm x 75mm	
NPR 9/88 - 11/93	Disc with Diesel Engine			Drum	300mm x 75mm Flat Low	
				Drum	320mm x 75mm 11,000 lb. Axle exc Flat Low	
				Drum	320mm x 100mm 13,000, 14,250 lb. Axle	
NPR 12/93 - 8/94	Disc with Diesel Engine			Drum	320mm x 75mm 11,000 lb. Axle	
				Drum	320mm x 100mm 13,000, 14,250 lb. Axle	
NPR 9/94 - 12/97	Disc with Diesel Engine			Drum	320mm x 75mm exc 14,250 lb. Axle	
				Drum	320mm x 100mm 14,250 lb. Axle	
NPR 1/98 - 2005 Class 3 Vehicle	Disc with Diesel Engine			Drum	320mm x 75mm	
NPR 1/98 - 2005 Class 4 HD Vehicle	Disc with Diesel Engine			Drum	320mm x 100mm	
NQR / W5 - 17,950 lb. GVW						
NQR 1/98 - 12/98	Disc	57mm Caliper		Drum	311.2mm x 121.9mm	Currently No Illustrated View. See Application Section of Catalog.
NQR 1/99 - 12/03	Disc	57mm Caliper				
NQR 1/04 - 2005	Disc	57mm Caliper				
NRR - HD / W5 - 19,500 lb. GVW						
NRR 11/87 - 7/93	Drum	320mm x 110mm	Currently No Illustrated View. See Application Section of Catalog.	Drum	320mm x 120mm	Currently No Illustrated View. See Application Section of Catalog.
NRR 1/04 - 2005	Disc	57mm Caliper	Group 4			

NOTES

ISUZU FRONT DRUM BRAKE 320mm x 75mm

(12.598" x 2.953")

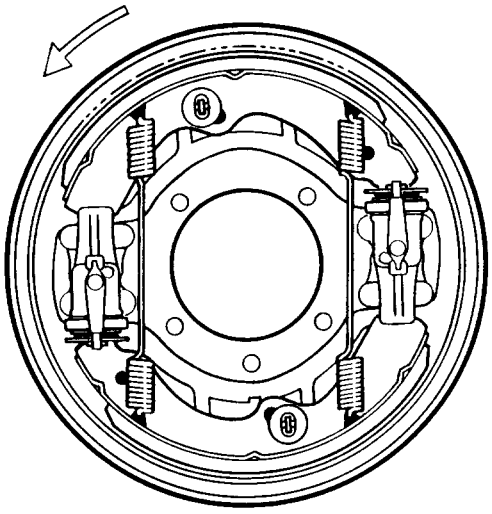

LH Brake Shown

MANUAL ADJUSTMENT HYDRAULIC

FMSI LINING	FMSI SHOE	BRAKE SIZE
1416	S612	320mm x 75mm

Front Drum:	
R442712616	1985 - 1986
R442712617	1987 - 11/93

Lined Shoe Kits (4 Shoes Per)
R46612 1985 - 11/93

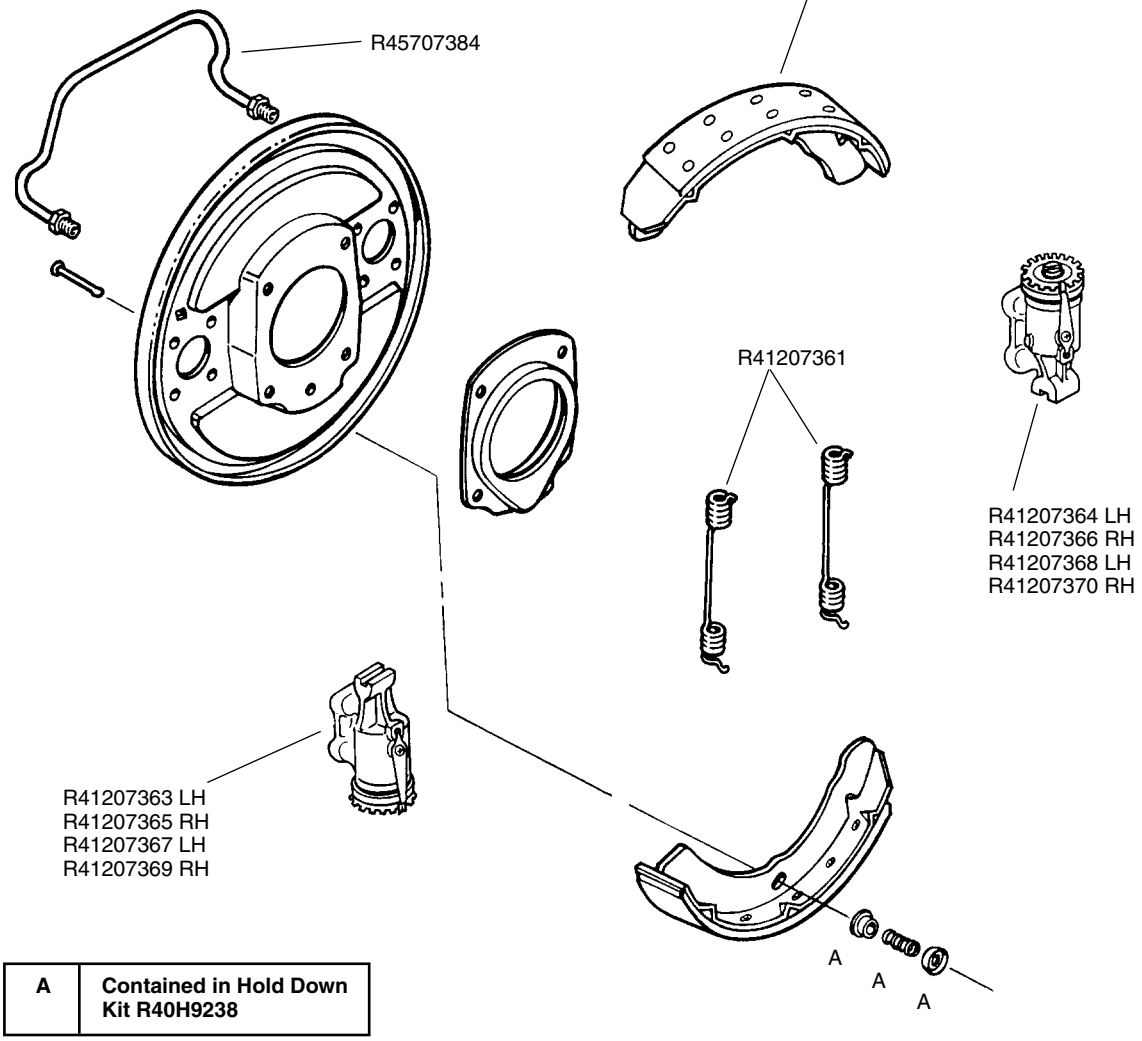

A	Contained in Hold Down Kit R40H9238

ISUZU FRONT DRUM BRAKE 320mm x 75mm

(12.598" x 2.953")

APPLICATION		KIT NUMBER
BRAKE SHOE RETURN SPRING Front and Rear Drum Brake 4 Per Axle 208mm (8.189") O.A.L. **HOLD DOWN KIT** Front and Rear Drum Brake 1 Per Axle Includes: 4 Hold Down Pins 4 Hold Down Springs 8 Spring Retainers		**MERITOR KIT NO.** **R40207361** For all models includes: 4 Hold Down Pin 4 Hold Down Spring 8 Spring Retainer
CROSS TUBE 2 per wheel cylinder kit		**MERITOR NO.** **R45707384**
WHEEL CYLINDERS **(1 1/16" Bore)** Wheel cylinders include pistons and manual adjuster. Casting #'s 51336L 51336R	R41207363 R41207365 	For 8/84 - 12/90 1/91 - 11/93 exc. 14,250 lb. Axle 1 **R41207363** LH Brake - Front 1 **R41207364** LH Brake - Rear w/o Bleeder 1 **R41207365** RH Brake - Front 1 **R41207366** RH Brake - Rear w/o Bleeder Port 10 x 1mm inverted flair
WHEEL CYLINDERS **(1 3/16" Bore)** Wheel cylinders include pistons and manual adjuster. Casting #'s 51338L 51338R	R41207367 R41207369 	For 1/91 - 11/93 14,250 lb. Axle 1 **R41207367** LH Brake - Front 1 **R41207368** LH Brake - Rear w/o Bleeder 1 **R41207369** RH Brake - Front 1 **R41207370** RH Brake - Rear w/o Bleeder Port 10 x 1mm
WHEEL CYLINDER REPAIR KITS	Photo not available at time of printing	**MERITOR KIT** 1 **R417382** For 1 1/16" Wheel Cylinder Includes: 4 Dust Boots 4 Cylinder Cup

Continued on next page.

ISUZU FRONT DRUM BRAKE 320mm x 100mm

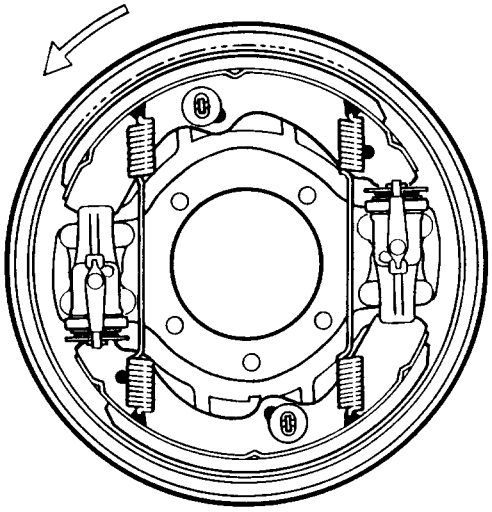

LH Brake Shown

MANUAL ADJUSTMENT
HYDRAULIC

FMSI LINING	FMSI SHOE	BRAKE SIZE
1482	S699	320mm x 100mm

Front Drum:	
R442712616	1985 - 1986
R442712617	1987 - 11/93

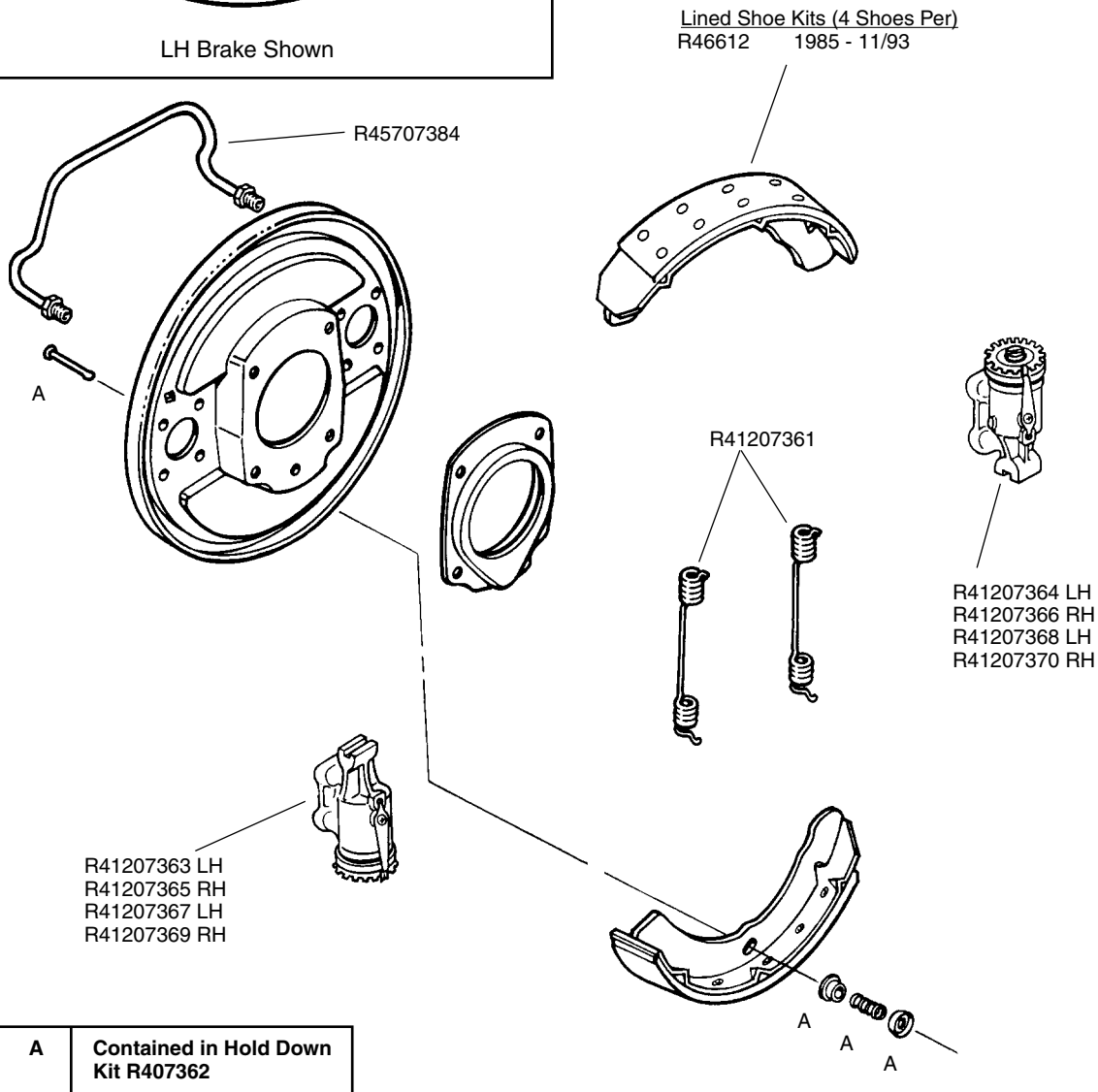

A	Contained in Hold Down Kit R407362

For Wheel Cylinder Repair Kits See Next Page.

ISUZU FRONT DRUM BRAKE 320mm x 100mm

APPLICATION		KIT NUMBER
WHEEL CYLINDERS **(1 3/16" Bore)** Wheel cylinders include pistons and manual adjuster. Casting #'s 51338L 51338R	R41207367 R41207369 	For 1/91 - 11/93 14,250 lb. Axle 1 **R41207367** LH Brake - Front 1 **R41207368** LH Brake - Rear w/o Bleeder 1 **R41207369** RH Brake - Front 1 **R41207370** RH Brake - Rear w/o Bleeder Port 10 x 1mm

ISUZU FRONT DRUM BRAKE 320mm x 100mm

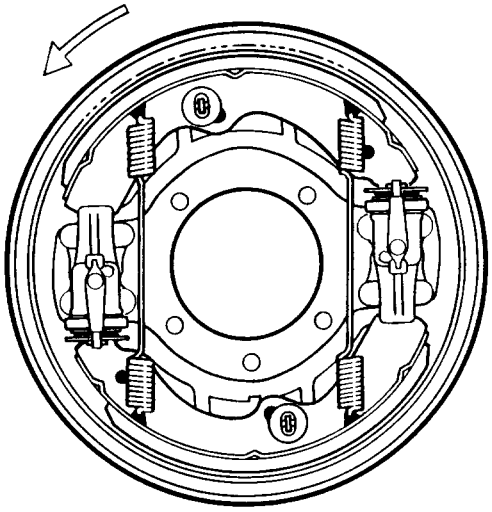

LH Brake Shown

MANUAL ADJUSTMENT
HYDRAULIC

FMSI LINING	FMSI SHOE	BRAKE SIZE
1416	S612	320mm x 75mm
1482	S699	320mm x 100mm

Rear Drum:
R442712616 1986
R442712617 1987 - 8/88
With 11,000 lb. Axles - exc. Flat Low

R442712619 9/88 - 11/93
With 13,000 and 14,250 lb. Axles - exc. Flat Low

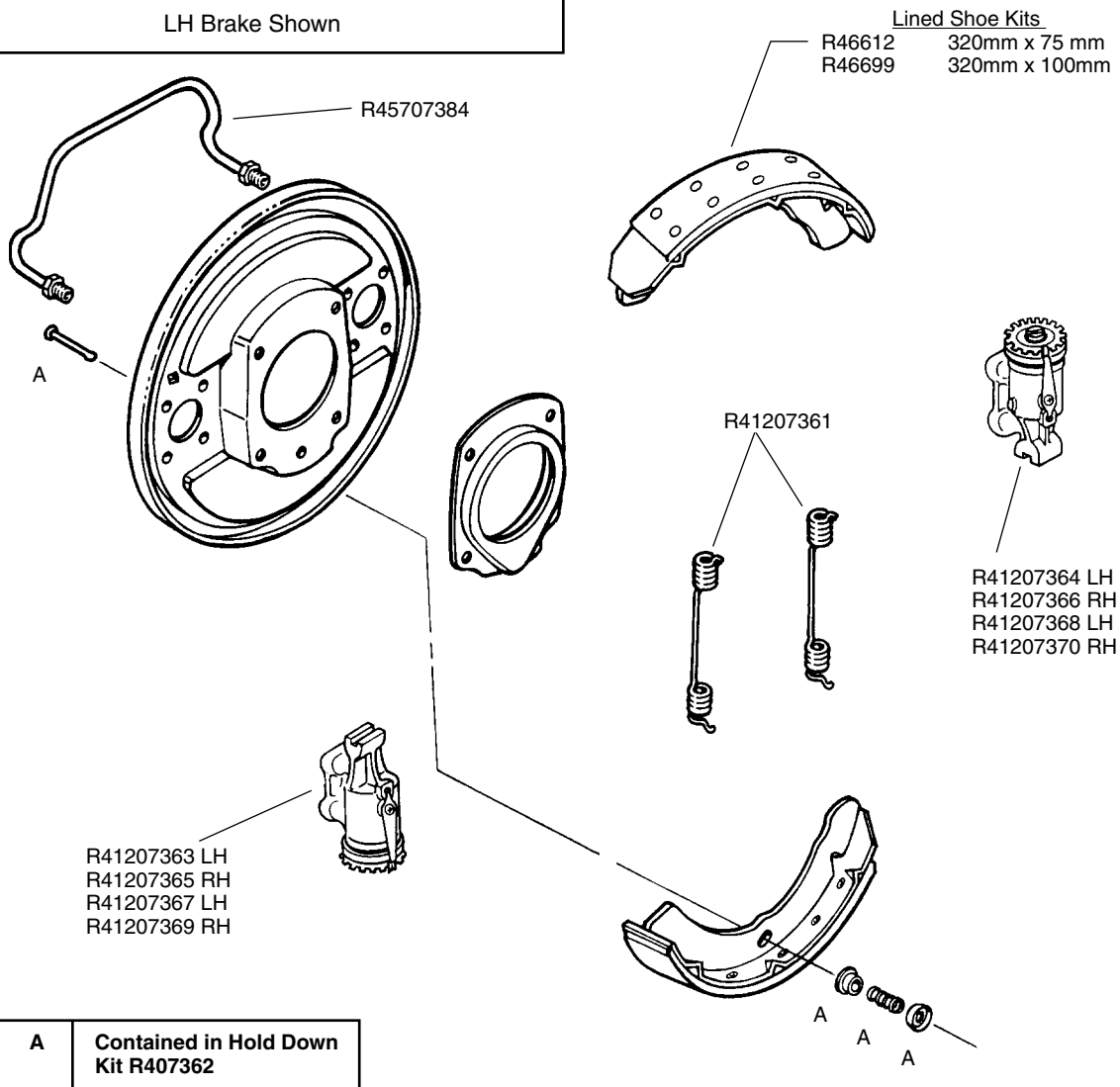

A	Contained in Hold Down Kit R407362

For Wheel Cylinder Repair Kits See Next Page.

ISUZU FRONT DRUM BRAKE 320mm x 100mm

WITH FRONT DRUM BRAKES			
R41207372	**WHEEL CYLINDERS (1" Bore)**		
	R412012622	L/H Brake Front and Rear	9/88 - 11/93 For Flat Low
	R412012623	R/H Brake Front	
	R412012624	R/H Brake Rear	
	WHEEL CYLINDERS (1-1/16" Bore)		
	R41207372	L/H Brake Front and Rear	1987 - 8/88 and 9/88 - 12/90 exc Flat Low Vehicles 1/91 - 11/93 with 14,250 Axle - exc Flat Low
	R41207375	R/H Brake Front	
	R41207374	R/H Brake Rear	
R41207375	**WHEEL CYLINDERS (1-5/16" Bore)**		
	R412012625	L/H Brake Front and Rear	1/91 - 11/93 For 14,250 lb. Axle
	R412012626	R/H Brake Front	
	R412012627	R/H Brake Rear	
WITH FRONT DISC BRAKES			
R41207379	**WHEEL CYLINDERS (1" Bore)**		
	R412012628	L/H Brake Front and Rear	9/88 - 12/90 For Flat Low
	R412012629	R/H Brake Front	
	R412012630	R/H Brake Rear	
	R412012631	L/H Brake Front and Rear	1/91 - 11/93 For Flat Low
	R412012632	R/H Brake Front	
	R412012633	R/H Brake Rear	
	WHEEL CYLINDERS (1-1/16" Bore)		
	R41207379	L/H Brake Front and Rear	8/87 - 8/88 9/88 - 7/92 exc Flat Low 8/92 - 1/99 exc Flat Low & 13,000, 14,250 lb. Axles 2/99 - 6/99 Class 3 Vehicle with out ABS With Gas Engines
	R41207380	R/H Brake Front	
	R41207381	R/H Brake Rear	
R41207380	**R41207379**	L/H Brake Front and Rear	8/87 - 8/88 9/88 - 7/92 exc Flat Low 8/92 - 11/93 exc Flat Low & 13,000 lb. Axles 12/93 - 8/94 exc 13,000, 14,250 lb. Axles 9/94 -12/97 exc 14,250 lb. Axles With Diesel Engines
	R41207380	R/H Brake Front	
	R41207381	R/H Brake Rear	
	R41207379	L/H Brake Front and Rear	1/98 - 13/98 Class 3 Vehicle With Diesel Engines
	R41207380	R/H Brake Front	
	R41207381	R/H Brake Rear	
	R41207379	L/H Brake Front	2/99 - 6/01 Class 3 Vehicle With Gas Engines
	R412012640	L/H Brake Rear	
	R41207380	R/H Brake Front	
	R41207381	R/H Brake Rear	
R41207381	**R41207379**	L/H Brake Front	1/99 - 2/03 Class 3 Vehicle With Diesel Engines
	R412012640	L/H Brake Rear	
	R41207380	R/H Brake Front	
	R41207381	R/H Brake Rear	
	R412012651	L/H Brake Front	3/03 - 2005 Class 3 Vehicle With Diesel Engines
	R412012652	L/H Brake Rear	
	R412012653	R/H Brake Front	
	R412012654	R/H Brake Rear	

ISUZU FRONT DRUM BRAKE 320mm x 75mm

WITH FRONT DISC BRAKES (Cont'd.)			
Photo not available at time of printing.	**WHEEL CYLINDERS (1-3/16" Bore)**		
	R412012634	L/H Brake Front and Rear	8/92 - 11/93 & 9/94 - 9/97 With 13,000 lb. Axle 12/93 - 8/94 With 13,000, 14250 lb Axle With Gas Engines
	R412012635	R/H Brake Front	
	R412012636	R/H Brake Rear	
	R412012634	L/H Brake Front and Rear	1/98 - 12/98 Class 4 Vehicle With Diesel Engines
	R412012635	R/H Brake Front	
	R412012636	R/H Brake Rear	
	R412012634	L/H Brake Front	7/01 - 3/02 Class 3 Vehicle With Gas Engines
	R412012641	L/H Brake Rear	
	R412012635	R/H Brake Front	
	R412012636	R/H Brake Rear	
	R412012634	L/H Brake Front	4/02 - 6/02 Class 3 Vehicle With Gas Engines
	R412012641	L/H Brake Rear	
	R412012635	R/H Brake Front	
	R412012642	R/H Brake Rear	
	R412012634	L/H Brake Front	1/99 - 12/02 Class 4 Vehicle With Diesel Engines
	R412012641	L/H Brake Rear	
	R412012635	R/H Brake Front	
	R412012642	R/H Brake Rear	
	R412012645	L/H Brake Front	7/02 - 2004 Class 3 Vehicle With Gas Engines
	R412012646	L/H Brake Rear	
	R412012647	R/H Brake Front	
	R412012642	R/H Brake Rear	
	R412012645	L/H Brake Front	1/03 - 2005 Class 4 HD Vehicle With Diesel Engines
	R412012646	L/H Brake Rear	
	R412012647	R/H Brake Front	
	R412012642	R/H Brake Rear	
Photo not available at time of printing.	**WHEEL CYLINDERS (1-5/16" Bore)**		
	R412012637	L/H Brake Front and Rear	10/97 - 6/99 Class 4 HD Vehicle With out ABS With Gas Engines
	R412012638	R/H Brake Front	
	R412012639	R/H Brake Rear	
	R412012637	L/H Brake Front	2/99 - 6/02 Class 4 HD Vehicle With ABS With Gas Engines
	R412012644	L/H Brake Rear	
	R412012638	R/H Brake Front	
	R412012639	R/H Brake Rear	
	R412012648	L/H Brake Front	7/02 - 2004 Class 4 HD Vehicle With Gas Engines
	R412012649	L/H Brake Rear	
	R412012643	R/H Brake Front	
	R412012650	R/H Brake Rear	

ISUZU FRONT DRUM BRAKE 320mm x 75mm

DRUMS				
MERITOR PART NO.	**BRAKE SIZE**	**BOLT HOLES BOLT SIZE**	**BOLT CIRCLE**	**GENERAL INFORMATION**
R442712616	320mm x 75mm	**5 19.5mm**	5 x 203	Height 192mm / Pilot 155.7mm ID 320.8mm / Max ID 321.5mm
R442712617	320mm x 75mm	**6 22.5mm**	6 x 223	Height 179mm / Pilot 171.9mm ID 320.8mm / Max ID 321.5mm
R442712619	320mm x 75mm	**6 22.5mm**	6 x 222.2	Height 192mm / Pilot 171.9mm ID 320.8mm / Max ID 321.5mm

ISUZU FRONT DRUM BRAKE 410mm x 140mm

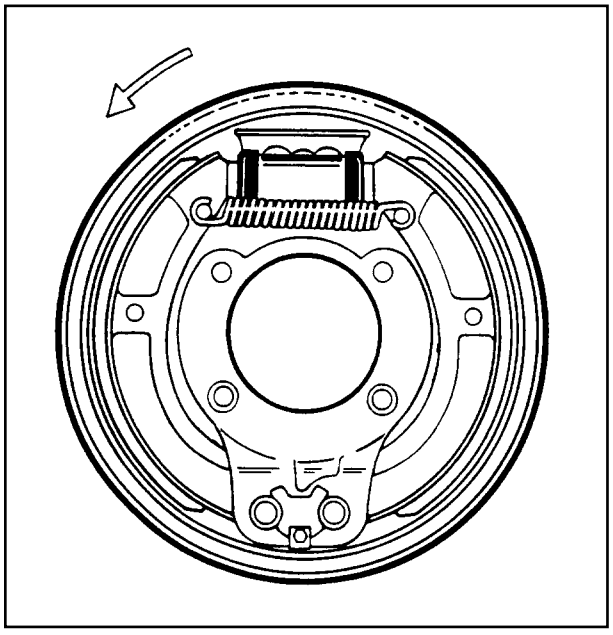

MANUAL ADJUSTMENT
HYDRAULIC

W7 Tiltmaster (September 1986 - Present)
25,950 lb. - 30,000 lb. GVW

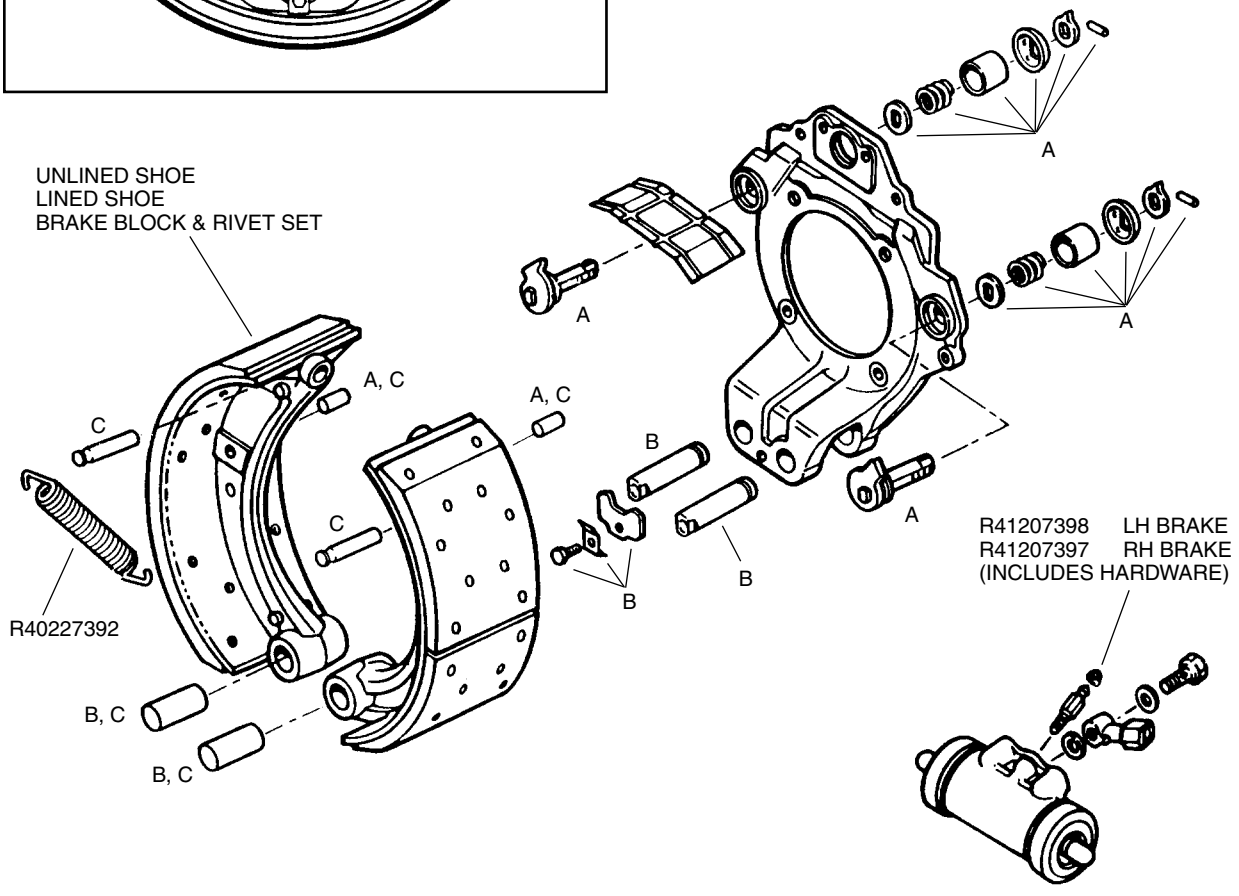

A	**Contained in Manual Adjuster Kit R407394**	**Not Shown**	**Uses Wheel Cylinder Repair Kit R41207399**
B	**Contained in Anchor Pin Service Kit R40227396**		

ISUZU FRONT DRUM BRAKE 410mm x 140mm

APPLICATION		KIT NUMBER
BRAKE SHOE RETURN SPRING KIT (Black) Front Drum Brake 2 Per Axle Contains two return springs 7-3/8" (7.375") O.A.L.		**MERITOR KIT NO.** **2 R40227392** Return Spring - Black
MANUAL ADJUSTER KIT Front Drum Brake 2 Per Axle		**MERITOR KIT NO. R40227394** **2 R40227394** Includes: 1 Clockwise Adjuster Cam 1 Counterclockwise Adjuster Cam 2 Adjuster Cam Spring 2 Adjuster Cam Boot 2 Cam Boot Cover 2 Adjustment Indicator 2 Adjuster Cam Washer 2 Spindle Pin 2 Cam Guide Pin
ANCHOR PIN SERVICE KIT Front Drum Brake 2 Per Axle		**MERITOR KIT NO. R40227396** **2 R40227396** Includes: 2 Anchor Pin 2 Brake Shoe Bushing 1 Lock Plate 1 Lock Washer 1 Lock Bolt
UNLINED BRAKE SHOE Used FMSI 1418 Brake Block Also used on rear brake	Photo Not Available At Time Of Printing	**MERITOR NO. R467389** (NLA) Cast Brake Shoe Includes: 1 Spring Retainer Pin (furnished loose) 1 Cam Guide Pin (furnished loose) 1 Bronze Shoe Bushing (installed)
LINED BRAKE SHOE	Photo Not Available At Time Of Printing	**MERITOR NO. R46613** R467389 Brake Shoe lined with non-asbestos Brake Block
BRAKE BLOCK AND RIVET SET	Photo Not Available At Time Of Printing	**MERITOR NO. R467390** Includes: 1 Axle Set of Meritor E31-1418* Non-Asbestos Brake Block 80 1097320340 Rivet *Not Sold Separately Nominal Thickness: 15.8mm (.622") Wear Limit: 1mm (.039") above rivet heads
BRAKE LINING RIVET SET	Photo Not Available At Time Of Printing	**MERITOR NO. 1097320340** 80 Semi-tublar brass Rivet with 6mm (.245") diameter body x 18.5mm (.728")long
WHEEL CYLINDERS **47.5mm (1.870" Bore)** Wheel cylinder includes pipe joint, pipe joint bolt, gasket and piston.	 R41207397	**R41207398** Front LH Brake with Bleeder Screw **R41207397** Front RH Brake with Bleeder Screw **WHEEL CYLINDER REPAIR KIT** **R41207399** Includes: 2 Piston Seal 2 Dust Boot Seal 2 Back-up Ring

ISUZU REAR DRUM BRAKE 410mm x 140mm

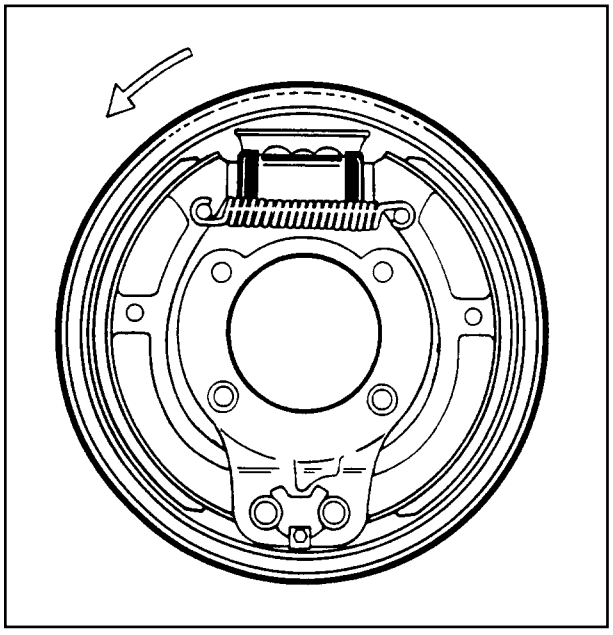

AIR OVER HYDRAULIC
MANUAL ADJUSTMENT
HYDRAULIC

25,950 lb. - 30,000 lb. GVW
FTR / W7 9/86 - 12/93

FMSI LINING	FMSI STEEL
1418	S613

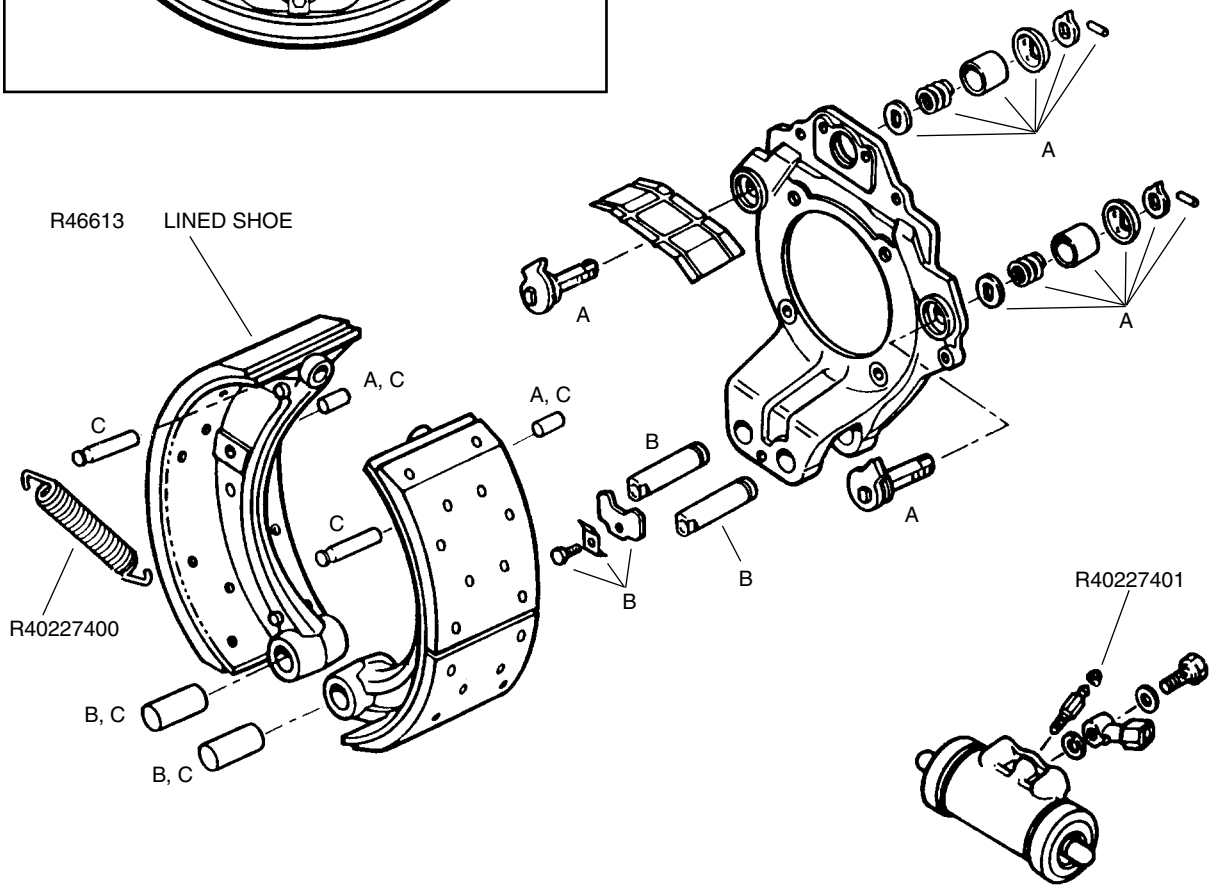

ISUZU REAR DRUM BRAKE 410mm x 140mm

	MERITOR NO.	DESCRIPTION	SPECIFICATIONS	QTY./ AXLE
Photo Not Available At Time Of Printing	**R46613**	**LINED BRAKE SHOE**	Brake Shoe lined with R46613 Meritor non-asbestos Brake Block	4
	R40227400	**BRAKE SHOE RETURN KIT (Black)**	Contains two return springs 7 3/8" O.A.L.	2
	WHEEL CYLINDER	**53.5MM (2.106" Bore)**		
	R40227401	Rear LH & RH Brake	With Pistons and Bleeder Screw	1
	WHEEL CYLINDER REPAIR KIT			
Photo Not Available At Time Of Printing	**R40227402**	For 53.5mm Wheel Cylinder	Includes: 2 Pistons Seal 2 Dust Boot Seal 2 Back-up Ring	2

ISUZU HYDRAULIC DISC BRAKE

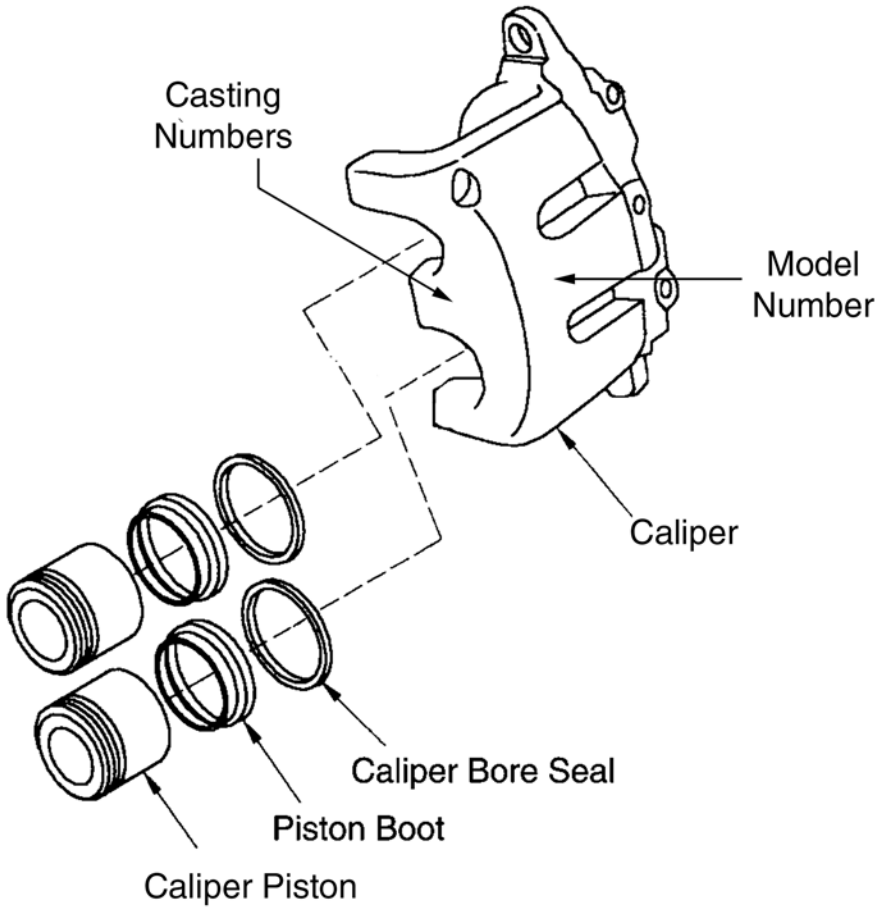

ISUZU / GM CALIPERS								
CALIPER NO.	LOCATION	HARDWARE	BOOT AND SEAL KIT	PISTON	DISC PADS	CASTING NO. TOP	CASTING NO. MIDDLE	CASTING NO. BOTTOM OR SIDE
R4212269	L/H	**R4012469**	**R4012285**	**R4012281**	**MD827**	5407	A934X	5707
R4212270	R/H	**R4012469**	**R4012285**	**R4012281**	**MD827**	5407	A935X	5721
R4212271X	L/H	**R4012470**	**R4012286**	**R4012282**	**MD825**	AD54T	2918	A922X
R4212272X	R/H	**R4012470**	**R4012286**	**R4012282**	**MD825**	AD54T	5111	A923X
R4212273	L/H	**R4012471**	**R4012284**	**R4012280**	**MD827**	5705	A940	4Z15
R4212274	R/H	**R4012471**	**R4012284**	**R4012280**	**MD827**	5705	A940	5609
R4212275	L/H	**R4012470**	**R4012283**	**R4012279**	**MD827**	AD57T	518	5702
R4212276	R/H	**R4012470**	**R4012283**	**R4012279**	**MD827**	AD57T	54D	5702
R4212277X	L/H	**R4012470**	**R4012283**	**R4012279**	**MD826**	AD57T	4X13	A918 3
R4212278X	R/H	**R4012470**	**R4012283**	**R4012279**	**MD826**	AD57T	829	BD012

ISUZU HYDRAULIC DISC BRAKE

	MERITOR NO.	REPLACES
HARDWARE KIT Services One Axle Photo Not Available At Time of Printing	**R402212503** **R402212504** **R4012471**	Isuzu / GM N/A Isuzu / GM N/A Isuzu / GM N/A
BOOT AND SEAL KIT R4012283 Shown	**R4012283** **R4012284** **R4012285**	Isuzu / GM 8-97168-636-0 Isuzu / GM 8-97365-914-0 Isuzu / GM 8-97365-913-0
CALIPER PISTON R4012280 Shown	**R4012279** **R4012280** **R4012281**	Isuzu / GM 8-97168-593-0 Isuzu / GM 8-97365-279-0 Isuzu / GM 8-97365-269-0
D825 **D826** **BRAKE PAD** 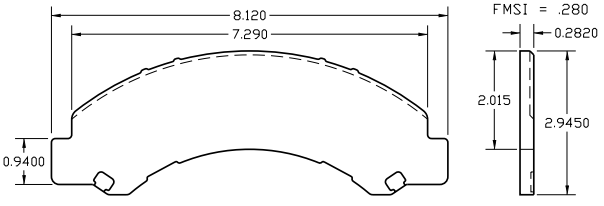 **D827** 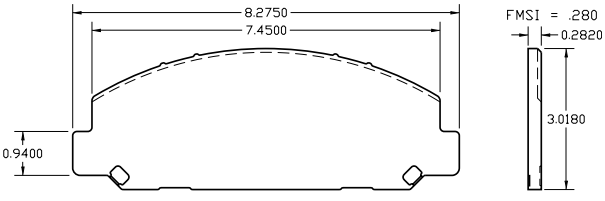	**MD825** **MD826** **MD827**	See page 2-62 for more detail See page 2-62 for more detail See page 2-62 for more detail

ISUZU FRONT DISC BRAKE CALIPERS

ISUZU FRONT DISC BRAKE CALIPERS			
	NPR VEHICLES WITH GAS ENGINES & REAR DRUM BRAKES		
R4212271X	**R42R1012655X**	Left / 54mm Piston Dia.	8/87 - 9/97 With Gas Engines Disc Pads E-D675-V
	R42R1012656X	Right / 54mm Piston Dia.	
	R4212271X	Left / 54mm Piston Dia.	10/97 - 1/99 Class 3 Vehicles With Gas Engines Disc Pads E-D825-S
	R4212272X	Right / 54mm Piston Dia.	
R4212221X	**R4212277X**	Left / 57mm Piston Dia.	10/97 - 1/99 Class 4 HD Vehicles With Gas Engines Disc Pads E-D826-S
	R4212278X	Right / 57mm Piston Dia.	
	R4212271X	Left / 54mm Piston Dia.	2/99 - 6/99 Class 3 Vehicle With Gas Engines Disc Pads E-D825-S
	R4212272X	Right / 54mm Piston Dia.	
R4212277X	**R4212277X**	Left / 57mm Piston Dia.	2/99 - 6/99 Class 4 HD Vehicle With Gas Engines w/o ABS Disc Pads E-D826-S
	R4212278X	Right / 57mm Piston Dia.	
	R4212275	Left / 57mm Piston Dia.	2/99 - 6/99 Class 4 HD Vehicle With Gas Engines with ABS Disc Pads E-D827-S
	R4212276	Right / 57mm Piston Dia.	
	R4212271X	Left / 54mm Piston Dia.	7/99 - 2004 Class 3 Vehicle With Gas Engines Disc Pads E-D825-S
	R4212272X	Right / 54mm Piston Dia.	
R4212275	**R4212275**	Left / 57mm Piston Dia.	2/99 - 6/99 Class 4 HD Vehicle With Gas Engines Disc Pads E-D827-S
	R4212276	Right / 57mm Piston Dia.	
	NPR VEHICLES WITH DIESEL ENGINES & REAR DRUM BRAKES		
R4212269	**R42R1012655X**	Left / 54mm Piston Dia.	8/87 - 12/97 With Diesel Engines Disc Pads E-D826-S
	R42R1012656X	Right / 54mm Piston Dia.	
	R4212271X	Left / 54mm Piston Dia.	1/98 - 12/03 With Diesel Engines Disc Pads E-D825-S
	R4212272X	Right / 54mm Piston Dia.	
R4212270	**R4212269**	Left / 54mm Piston Dia.	1/04 - 2005 With Diesel Engines Disc Pads E-D825-S
	R4212270	Right / 54mm Piston Dia.	
	NQR VEHICLES WITH REAR DRUM BRAKES		
R4212278	**R4212277X**	Left / 57mm Piston Dia.	1/98 - 12/98 Disc Pads E-D675-V
	R4212278X	Right / 57mm Piston Dia.	
	R4212275	Left / 57mm Piston Dia.	1/99 - 12/03 Disc Pads E-D827-S
	R4212276	Right / 57mm Piston Dia.	
R4212273	**R4212273**	Left / 57mm Piston Dia.	1/04 - 2005 Disc Pads E-D827-S
	R4212274	Right / 57mm Piston Dia.	
	NRR VEHICLES WITH REAR DRUM BRAKES		
R4212274	**R4212273**	Left / 57mm Piston Dia.	1/04 - 2005 Disc Pads E-D827-S
	R4212274	Right / 57mm Piston Dia.	

NOTES

MITSUBUSHI FUSO

Vehicle Model and Year	Desig-nation	Type	Front Brake			Type	Rear Brake			
			Rotor	Caliper	Disc Pads		Rotor or Drum	Shoes or Disc Pads	Hardware	Calipers or Wheel Cylin-ders
FE Series Vehicle GVW Rating 11,500 - 14,050 lb. 1987 - 2006										
1987 - 11/88	Front Axle	Disc 48mm Dia. Caliper Pistons	R46681	R42R1012698X L/H R42R1012699X R/H	MD624					
12/88 - 3/95	Front Axle	Disc 51mm Dia. Caliper Pistons	R441712432	R42R1012433X L/H Upper R42R1012434X L/H Lower R42R1012435X R/H Upper R42R1012436X R/H Lower	MD433 2 Sets Required					
FE 639 4/95 - 1999	Front Axle	Disc 51mm Dia. Caliper Pistons	R441712432	R42R1012433X L/H Upper R42R1012434X L/H Lower R42R1012435X R/H Upper R42R1012436X R/H Lower	MD735 2 Sets Required					
FE 640, FE649 4/95 - 1999	Front Axle	Disc 51mm Dia. Caliper Pistons	R441712451	R42R1012455X L/H Upper R42R1012456X L/H Lower R42R1012457X R/H Upper R42R1012458X R/H Lower	MD734 2 Sets Required					
FE369 L 2000 - 2004	Front Axle	Disc 51mm Dia. Caliper Pistons	R441712432	R42R1012433X L/H Upper R42R1012434X L/H Lower R42R1012435X R/H Upper R42R1012436X R/H Lower	MD735 2 Sets Required					
FE639 T 2000 - 2004	Front Axle	Disc 51mm Dia. Caliper Pistons	R441712450	R42R1012455X L/H Upper R42R1012456X L/H Lower R42R1012457X R/H Upper R42R1012458X R/H Lower	MD734 2 Sets Required					
FE640, FE649 2000 - 2004	Front Axle	Disc 51mm Dia. Caliper Pistons	R441712451	R42R1012455X L/H Upper R42R1012456X L/H Lower R42R1012457X R/H Upper R42R1012458X R/H Lower	MD734 2 Sets Required					
1987 - 6/89	Rear Axle					Drum 320mm x 75mm	R442712443	R442712444	R402212445	R412012701 L/H Front R412012702 L/H Rear R4120122703 R/H Front R4120122704 R/H Rear
7/89 - 2004	Rear Axle					Drum 320mm x 75mm	R442712443	R442712444	R402212445	R412212446 L/H Front R412212447 L/H Rear R412212448 R/H Front R412212448 R/H Rear
1995 - 2004	Rear Axle					Disc 51mm Dia. Caliper Pistons	R442712438	MD734	MD734 2 Sets Required	R42R1012439 L/H Front R42R1012440 L/H Rear R42R1012441 R/H Front R42R1012442 R/H Rear

MITSUBUSHI FUSO

Vehicle Model and Year	Desig-nation	Type	Front Brake			Type	Rear Brake			
			Rotor	Caliper	Disc Pads		Rotor or Drum	Shoes or Disc Pads	Hardware	Calipers or Wheel Cylin-ders
FG AWD Series Vehicle GVW Rating 12,000 - 14,050 lb. 1990 - 2001										
1990 - 2001	Front Axle	Drum 320mm x 75mm	R442712443	R442712444	R402212445	N/A				
1990 - 2001	Rear Axle	Drum 320mm x 75mm					R442712443	R442712444	R402212445	N/A
FH Series Vehicle GVW Rating 17,995 lb. 1988 - 2000										
1988 - 1995	Front Axle	Drum 320mm x 110mm	N/A	R46602	R402212708	N/A				
1996 - 2000	Front Axle	Drum 320mm x 120mm	N/A	R47830	N/A	N/A				
1988 - 1995	Rear Axle	Drum 320mm x 130mm					N/A	R46632	R402212709	N/A
1996 - 2000	Rear Axle	Drum 320mm x 140mm					N/A	R46731	N/A	N/A
FK Series Vehicle GVW Rating 20,935 - 23,000 lb. 1998 - 2000										
1987 - 2000	Front Axle	Drum 400mm x 120mm	N/A	R46617	R402212711	N/A				
1987 - 2000	Rear Axle	Drum 400mm x 155mm					N/A	R46686	R402212712	N/A
FM Series Vehicle GVW Rating 25,995 - 30,000 lb. 1989 - 2006										

FRONT AXLE 51MM DIA PISTON

CALIPERS
R42R1012433X LH Upper
R42R1012434X LH Lower
R42R1012435X RH Upper
R42R1012436X RH Lower

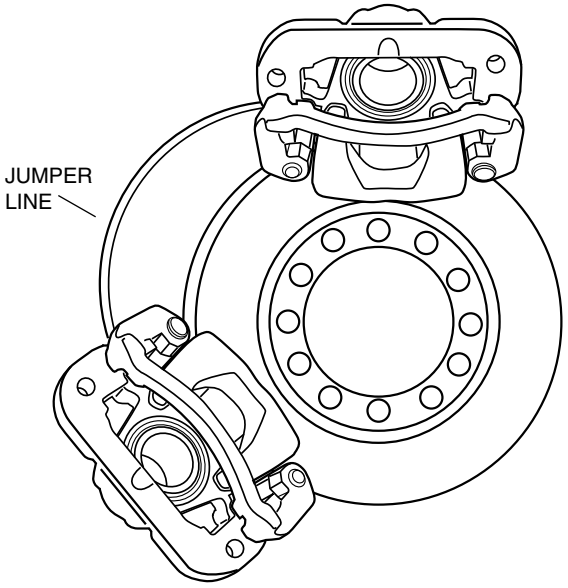

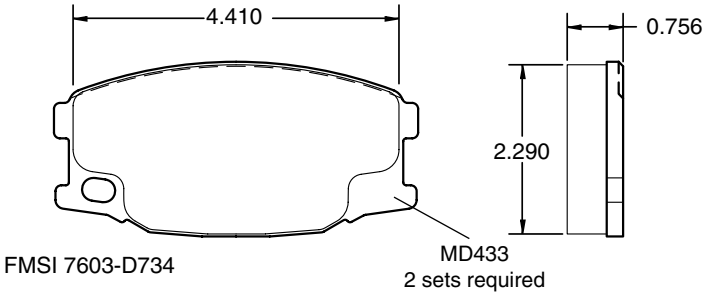

FMSI 7603-D734

MD433
2 sets required

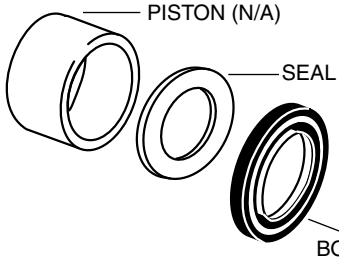

BOOT
BOOT & SEAL KIT
R401512713

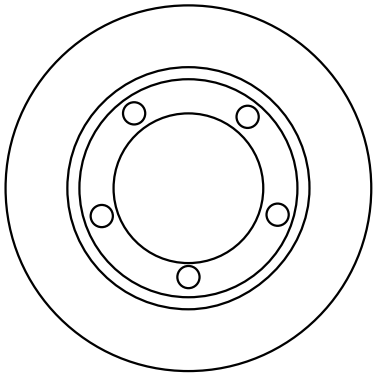

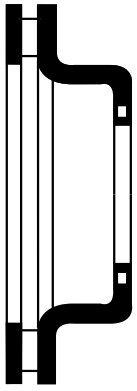

ROTOR
R441712432
O.D. 288.0mm
Height 56.1mm
Pilot 56.1mm
Bolt 5

Mounted Behind the Hub

FRONT AXLE 51MM DIA PISTON

CALIPERS
R42R1012433X LH Upper
R42R1012434X LH Lower
R42R1012435X RH Upper
R42R1012436X RH Lower

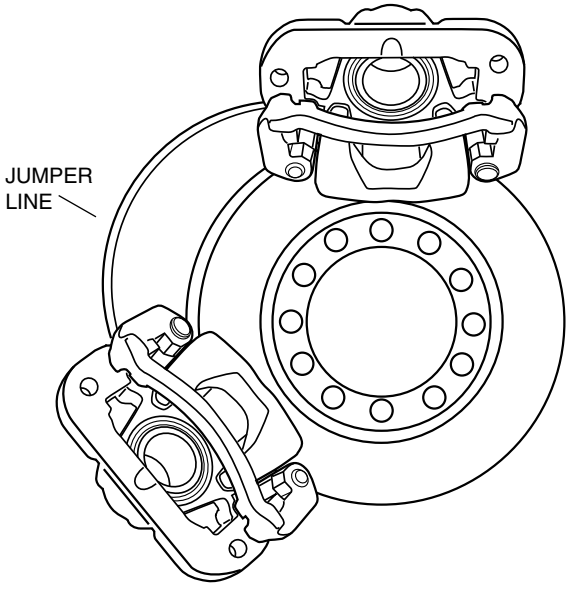

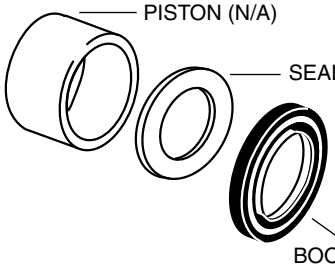

BOOT
BOOT & SEAL KIT
R401512713

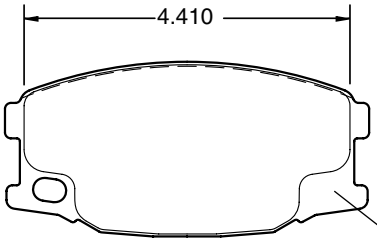

FMSI 7603-D734

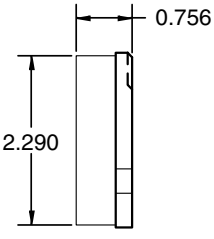

MD735
2 sets required

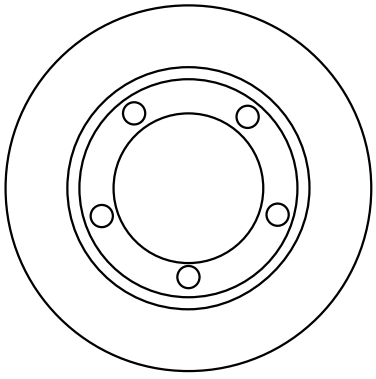

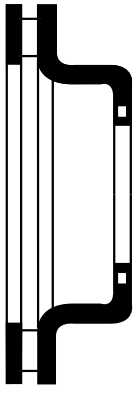

ROTOR
R441712432
O.D. 288.0mm
Height 56.1mm
Pilot 110.0mm
Bolt 5

Mounted Behind the Hub

FRONT AXLE 51MM DIA PISTON

CALIPERS
R42R1012455X LH Upper
R42R1012456X LH Lower
R42R1012457X RH Upper
R42R1012458X RH Lower

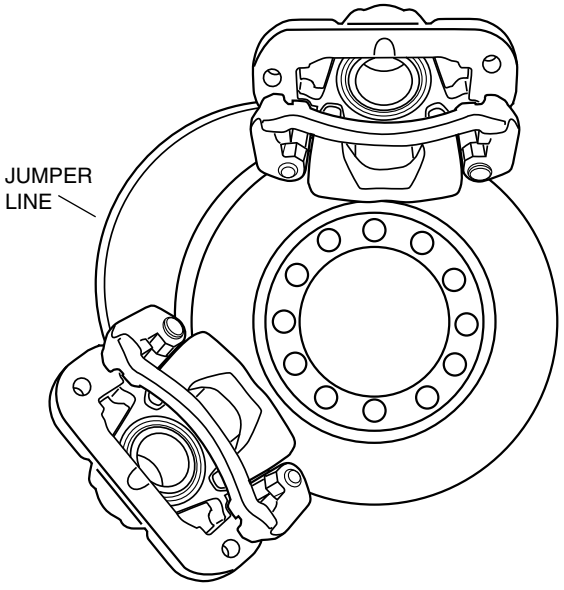

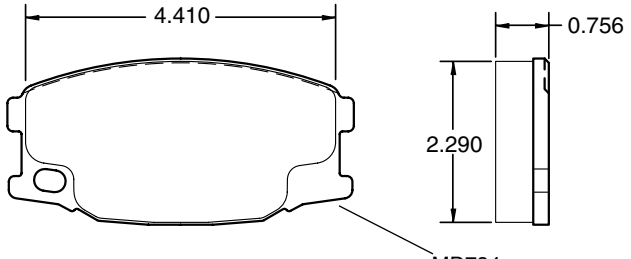

FMSI 7603-D734

MD734
2 sets required

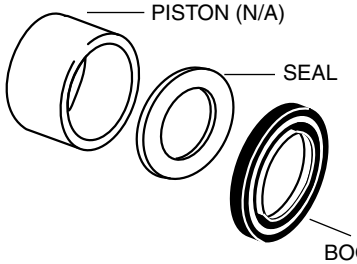

BOOT
BOOT & SEAL KIT
R401512713

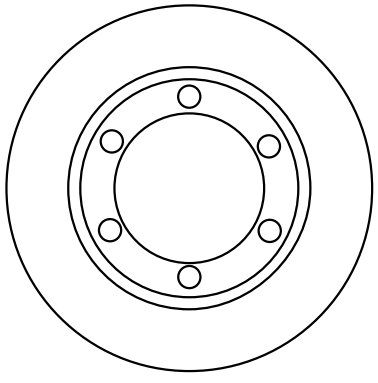

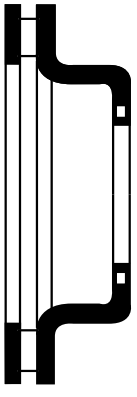

ROTOR
R441712451
O.D. 293.0mm
Height 53.9mm
Pilot 114.0mm
Bolt 6

Mounted Behind the Hub

FRONT AXLE 51MM DIA PISTON

CALIPERS
R42R1012455X LH Upper
R42R1012456X LH Lower
R42R1012457X RH Upper
R42R1012458X RH Lower

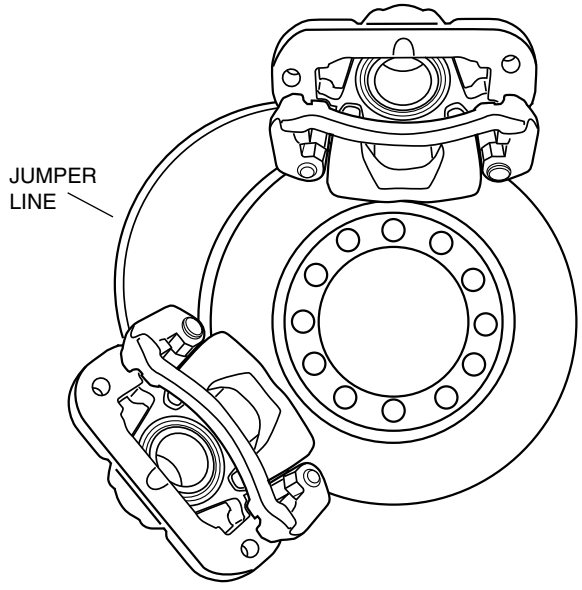

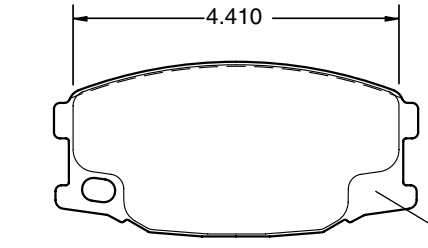

FMSI 7603-D734

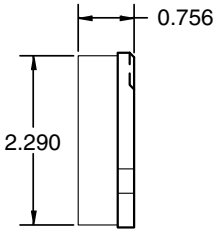

MD734
2 sets required

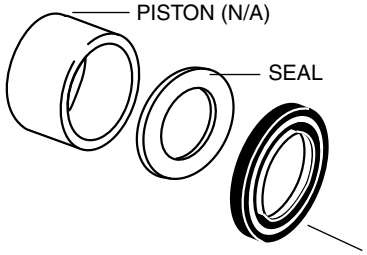

BOOT
BOOT & SEAL KIT
R401512713

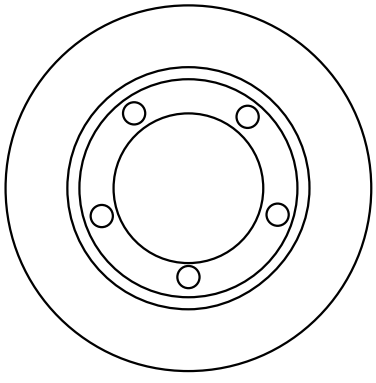

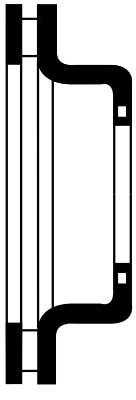

ROTOR
R441712450
O.D. 293.0mm
Height 54.3mm
Pilot 110.0mm
Bolt 5

Mounted Behind the Hub

REAR AXLE 51MM DIA PISTON

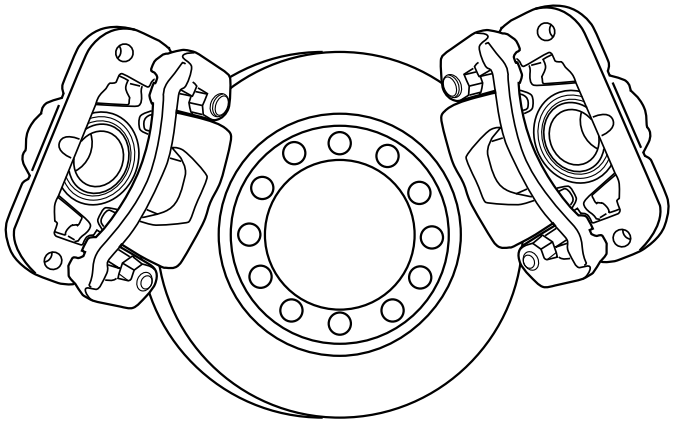

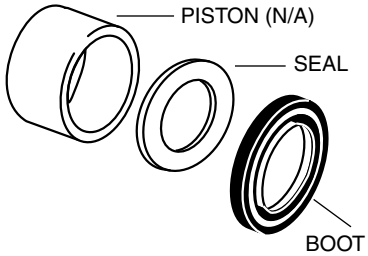

BOOT
BOOT & SEAL KIT
R401512713

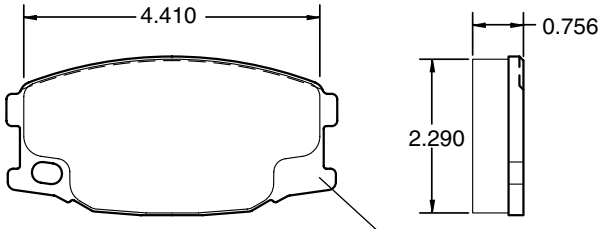

FMSI 7603-D734

MD734
2 sets required

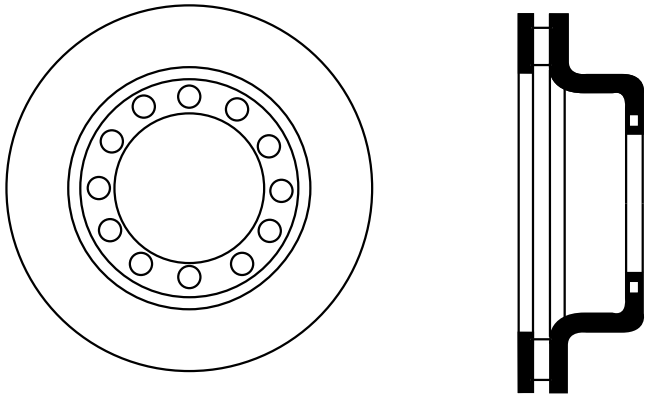

ROTOR
R441712451
O.D. 293.0mm
Height 49.1mm
Pilot 124.0mm
Bolt 12

Mounted Behind the Hub

NOTES

NISSAN UD

Vehicle Type and Year	Front Brake					Rear Brake				
	Size	Shoes	Hardware	Wheel Cylinder	Drum	Size	Shoes	Hardware	Wheel Cylinder	Drum
UD 1100										
1989 - 1991	320mm x 65mm	R6680	R402212715	N/A	N/A	320mm x 65mm	R6680	N/A	N/A	N/A
Vehicle Type and Year	**Front Brake**					**Rear Brake**				
	Type	**Pads**	**Caliper**	**Caliper Repair Kit**	**Rotor**	**Type & Size**	**Shoes**	**Hardware**	**Wheel Cylinder**	**Drum**
UD 1200 Series Vehicle GVW Rating 12,000 lb.										
1999 - 2002	Disc Brake	MD646	R42R1012459 R42R1012460	R401512717	R441712454	Drum 320mm x 90mm	R46695	R402212716	N/A	N/A
Vehicle Type and Year	**Front Brake**					**Rear Brake**				
	Size	**Shoes**	**Hardware**	**Wheel Cylinder**	**Drum**	**Size**	**Shoes**	**Hardware**	**Wheel Cylinder**	**Drum**
UD 1300 Series Vehicle GVW Rating 13,000 lb.										
1992 - 1993	320mm x 75mm	R46681	R402212716	N/A	N/A	320mm x 75mm	R46681	R402212716	N/A	N/A
Vehicle Type and Year	**Front Brake**					**Rear Brake**				
	Type	**Pads**	**Caliper**	**Caliper Repair Kit**	**Rotor**	**Type & Size**	**Shoes**	**Hardware**	**Wheel Cylinder**	**Drum**
UD 1400 Series Vehicle GVW Rating 14,250 lb.										
1994 - 2002	Disc Brake	MD646	R42R1012459 R42R1012460	R401512717	R401712718	Drum 320mm x 90mm	R46695	R402212716	N/A	N/A
Vehicle Type and Year	**Front Brake**					**Rear Brake**				
	Size	**Shoes**	**Hardware**	**Wheel Cylinder**	**Drum**	**Size**	**Shoes**	**Hardware**	**Wheel Cylinder**	**Drum**
UD 1800 Series Vehicle GVW Rating 17,995 lb. (Air Over Hydraulic Brake System)										
1989 - 2002	320mm x 110mm	R46602	R402212708	N/A	N/A					
1989 - 1994						320mm x 135mm	R46679	R402212709	N/A	N/A
1995 - 2002 w/o Wheel Park						320mm x 135mm	R46679	R402212709	N/A	N/A
1995 - 2002 With Wheel Park						320mm x 135mm	R46717	R402212720	N/A	N/A

NISSAN UD

Vehicle Type and Year	Front Brake					Rear Brake				
	Size	Shoes	Hardware	Wheel Cylinder	Drum	Size	Shoes	Hardware	Wheel Cylinder	Drum
UD 2000 Series Vehicle GVW Rating 19,500 lb. (Air Over Hydraulic Brake System)										
1984 - 1994	370mm x 100mm	R46603	R402212724	N/A	N/A					
1995 - 2002	320mm x 110mm	R46602	R402212708	N/A	N/A					
1989 - 1994						320mm x 135mm	R46604	R402212724	N/A	N/A
1995 - 2002 w/o Wheel Park						320mm x 135mm	R46679	R402212709	N/A	N/A
1995 - 2002 With Wheel Park						320mm x 135mm	R46717	R402212720	N/A	N/A
Vehicle Type and Year	**Front Brake**					**Rear Brake**				
	Size	**Shoes**	**Hardware**	**Wheel Cylinder**	**Drum**	**Size**	**Shoes**	**Hardware**	**Wheel Cylinder**	**Drum**
UD 2300 Series Vehicle GVW Rating 23,000 lb. (Air Over Hydraulic Brake System)										
1989 - 2002	370mm x 100mm	R46603	R402212724	N/A	N/A	370mm x 135mm	R46604	R402212724	N/A	N/A
Vehicle Type and Year	**Front Brake**					**Rear Brake**				
	Size	**Shoes**	**Hardware**	**Wheel Cylinder**	**Drum**	**Size**	**Shoes**	**Hardware**	**Wheel Cylinder**	**Drum**
UD 2600 Series Vehicle GVW Rating 25,995 lb. (Air Over Hydraulic Brake System)										
1998 - 2002	100mm x 120mm	R46617	R402212711	N/A	N/A	400mm x 154mm	R46614	R402212725	N/A	N/A
Vehicle Type and Year	**Front Brake**					**Rear Brake**				
	Size	**Shoes**	**Hardware**	**Wheel Cylinder**	**Drum**	**Size**	**Shoes**	**Hardware**	**Wheel Cylinder**	**Drum**
UD 3300 Series Vehicle GVW Rating 32,900 lb. (Air Over Hydraulic Brake System)										
1999 - 2006	410mm x 150mm	N/A	N/A	N/A	N/A	410mm x 220mm	N/A	N/A	N/A	N/A

IMPORT BRAKE SHOE INDEX

FMSI SHOE NO.	FMSI FRICTION NO.	MERITOR LINED SHOE NO.	MERITOR UNLINED SHOE NO.	BRAKE SIZE	CENTRIC CROSS	MANUFACTURE	AXLE POSITION	ADJUSTMENT	RETURN SPRING KIT	COMMENTS
Imports										
S603	1411	**R46603**		370mm x 100m Low Deck	112.060	Isuzu / Nissan UD	Front		**R402212724**	Need Complete shoe assembly / boxed in qty of four
S612	1416	**R46612**		320mm x 75mm	112.061	Isuzu	Rear			Need Complete shoe assembly / boxed in qty of four
S726	1417			320mm x 75mm	112.073					Need Complete shoe assembly / boxed in qty of four
S615	1420			410mm x 115mm	112.062	Isuzu	Rear			Need Complete shoe assembly / boxed in qty of four
S616	1421			400mm x 115mm	112.062	Isuzu	Front			Need Complete shoe assembly / boxed in qty of four
S632	1434	**R46632**		320mm x 130mm	112.063					Need Complete shoe assembly / boxed in qty of four
S669	1455			320mm x 120mm	112.067					Need Complete shoe assembly / boxed in qty of four
S672	1458	**R46672**		320mm x 110mm	112.067	Isuzu	Front		**R412212614**	Need Complete shoe assembly / boxed in qty of four
S679	1464	**R46679**		320mm x 135mm	112.068	Mitsubishi Fuso	Rear		**R402212709**	Need Complete shoe assembly / boxed in qty of four
S680	1465	**R46680**		320mm x 65mm	112.068	Nissan UD	Front / Rear		**R402212715**	Need Complete shoe assembly / boxed in qty of four
S681	1466	**R46681**		320mm x 75mm	112.068	Nissan UD	Front / Rear			Need Complete shoe assembly / boxed in qty of four
S682	1467	**R46682**		320mm x 75mm	112.068	Mitsubishi Fuso	Rear			New Part Number Currently in Purch01
S683	1468	**R46683**		320mm x 75mm	112.068					Need Complete shoe assembly / boxed in qty of four
S684	1469	**R46684**		320mm x 110mm	112.068	Hino	Front		**R412212663**	Need Complete shoe assembly / boxed in qty of four
S685	1470	**R46685**		320mm x 125mm	112.069	Hino	Rear		**R442712620**	Need Complete shoe assembly / boxed in qty of four
S695	1478	**R46695**		320mm x 90mm	112.070					New Part Number Currently in Purch01
S699	1482	**R46699**		320mm x 100mm	112.070	Isuzu	Rear			Need Complete shoe assembly / boxed in qty of four
S602	1410	**R46602**		320mm x 110mm	112.060	Mitsubishi Fuso	Front			Need Complete shoe assembly / boxed in qty of four

IMPORT BRAKE SHOE INDEX

FMSI SHOE NO.	FMSI FRICTION NO.	MERITOR LINED SHOE NO.	MERITOR UNLINED SHOE NO.	BRAKE SIZE	CENTRIC CROSS	MANUFACTURE	AXLE POSITION	ADJUSTMENT	RETURN SPRING KIT	COMMENTS
S604	1412			370mm x 135mm	112.060	Isuzu	Rear			Need Complete shoe assembly / boxed in qty of four
S613	1418	**R46613**		410mm x 140mm Manual (16.142" x 5.512")	112.061	Isuzu	Front / Rear			Need Complete shoe assembly / boxed in qty of four
S614	1419	**R46614**		400mm x 154mm	112.061	Nissan UD	Rear			Need Complete shoe assembly / boxed in qty of four
S617	1422	**R46617**		400mm x 120mm	112.062	Nissan UD	Front			Need Complete shoe assembly / boxed in qty of four
S668	1454			300mm x 75mm	112.067	Isuzu	Rear			Need Complete shoe assembly / boxed in qty of four
S792	1534	**R46792**		311.2mm x 121.9mm	112.079	Isuzu	Rear			Need Complete shoe assembly / boxed in qty of four
S727	1498			320mm x 145mm	112.073	Isuzu	Rear			Need Complete shoe assembly / boxed in qty of four
S718	1418			410mm x 140mm Auto	112.072	Isuzu	Front / Rear			Need Complete shoe assembly / boxed in qty of four
S647	2086			9" x 3" Park Brake Shoe	110.065		Parking			
S824	1556			12" x 3" Park Brake Shoe	110.082		Parking			
S717	1464	**R46717**		320mm x 135mm w/ wheel park	112.072					Need Complete shoe assembly / boxed in qty of four
S730	1501	**R46730**		320mm x 120mm Front wheel Mits		Mitsubishi Fuso	Front			
S731	1502	**R46731**								
S686	1419	**R46686**								

IMPORT BRAKE SHOE INDEX

FMSI SHOE NO.	FMSI FRICTION NO.	MERITOR LINED SHOE NO.	MERITOR UNLINED SHOE NO.	BRAKE SIZE	CENTRIC CROSS	MANUFACTURE	AXLE POSTION	ADJUST-MENT	RETURN SPRING KIT	COMMENTS
449	2159TT	**R46449**		11" x 2"		General Motors	Rear	Automatic	**R40H7046**	
451	2042AT	**R46451**		13" x 2 1/2"		General Motors	Rear	Automatic	**R40H378**	
452	2157T	**R46452**		13" x 3 1/2"		General Motors	Rear	Automatic	**R40H378**	
462	2134ATT	**R46462**		11" x 2"		GMC / Jeep	Rear	Automatic	**R4011082**	
473	2073T	**R46473**		11 11/64" x 2 3/4"		General Motors	Rear	Automatic	**R307690**	
481	2089AT	**R468134**		10" x 2 1/2"		Ford / Jeep	Rear	Automatic	**R408044 / R40H7149**	
514	2117ATT	**R46514**		9 1/2" x 2"		General Motors	Rear	Automatic	**R507950**	
538	2168T	**R46538**		9 1/2" x 2 1/2"		Dodge	Rear	Automatic	**R40H133**	
552	2165T	**R46552**		8 55/64" x 1 49/64"		General Motors	Rear	Automatic	**R407953**	
569	2151T	**R41569**		9" x 1 3/4"		Ford	Rear	Automatic	**R40H364**	
581	2089AT	**R41581**		10" x 2 1/2"		Ford	Rear	Automatic	**R40H357**	
582	2141AT	**R41582**		11 1/32" x 2 1/4"		Ford	Rear	Automatic	**R40H7225**	
583	2171T	**R418140**		12 1/8" x 3 1/2"		Ford	Rear	Automatic	**R40H608**	
593	1404	**R46593**		10" x 2 1/4"		General Motors	Rear	Automatic	**R40H7276**	
705	2089AT	**R46705**		10" x 2 1/2"		Ford	Rear	Automatic		

IMPORT BRAKE SHOE

357

Old 316

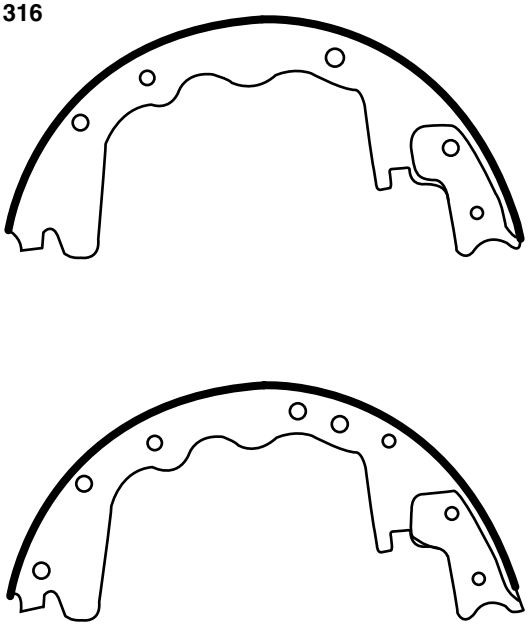

Low Anchor Type

Sold 4 Per Set

MERITOR SHOE NO.	FMSI SHOE NO.	FMSI LINING NO.	SIZE	RIVET
R46357 (LS)	357	2146AT	12" x 2 1/2"	4-5

358

Old 314

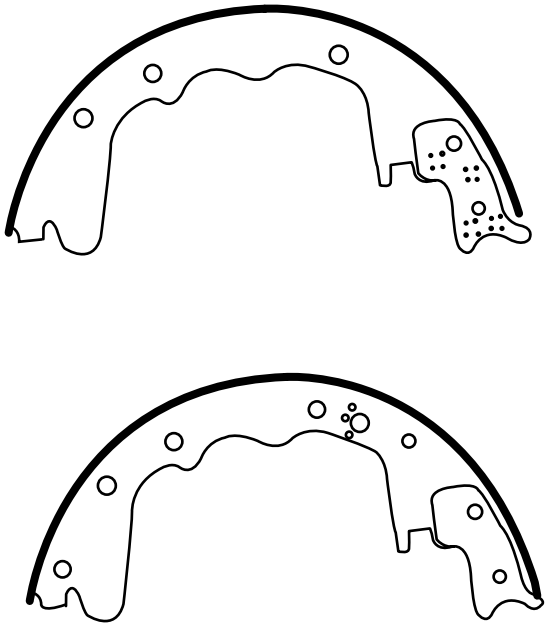

Low Anchor Type

Sold 4 Per Set

MERITOR SHOE NO.	FMSI SHOE NO.	FMSI LINING NO.	SIZE	RIVET
R46358 (LS)	358	2140AT	12" x 3"	4-5

445

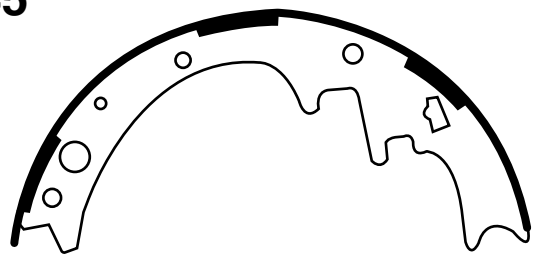

Sold 4 Per Set

MERITOR SHOE NO.	FMSI SHOE NO.	FMSI LINING NO.	SIZE	RIVET
R46445 (LS)	445	2089T	10" x 2 1/2"	4-4

446

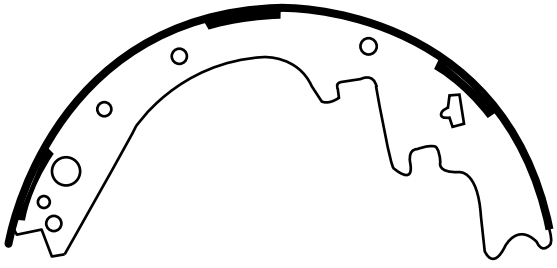

Sold 4 Per Set

MERITOR SHOE NO.	FMSI SHOE NO.	FMSI LINING NO.	SIZE	RIVET
R46446 (LS)	446	2025T	11" x 2 1/2"	Bonded

449

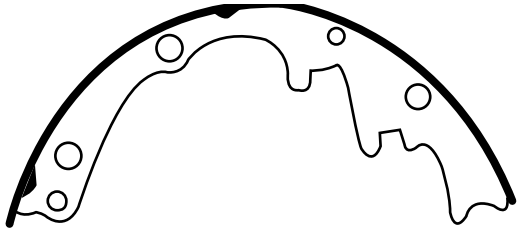

Sold 4 Per Set

MERITOR SHOE NO.	FMSI SHOE NO.	FMSI LINING NO.	SIZE	RIVET
R46449 (LS)	449	2159TT	11" x 2"	4-5

451

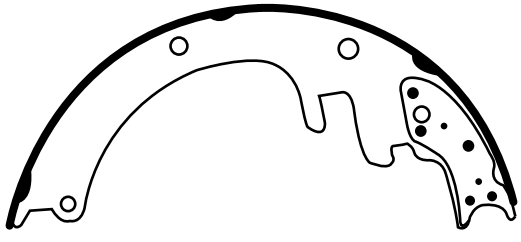

Sold 4 Per Set

MERITOR SHOE NO.	FMSI SHOE NO.	FMSI LINING NO.	SIZE	RIVET
R46451(LS)	451	2042AT	13" x 2 1/2"	7-6

IMPORT BRAKE SHOE

452

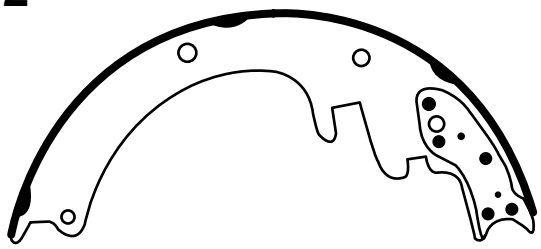

Sold 4 Per Set

MERITOR SHOE NO.	FMSI SHOE NO.	FMSI LINING NO.	SIZE	RIVET
R46452 (LS)	452	2157T	13" x 3 1/2"	7-6

462

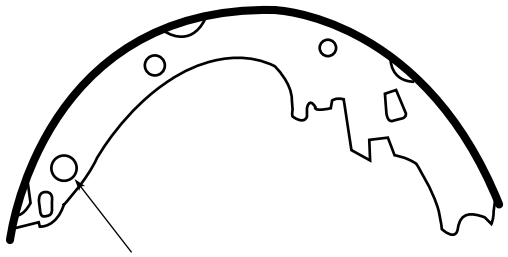

Sold 4 Per Set

MERITOR SHOE NO.	FMSI SHOE NO.	FMSI LINING NO.	SIZE	RIVET
R46462 (LS)	462	2134ATT	11" x 2"	4-4

473

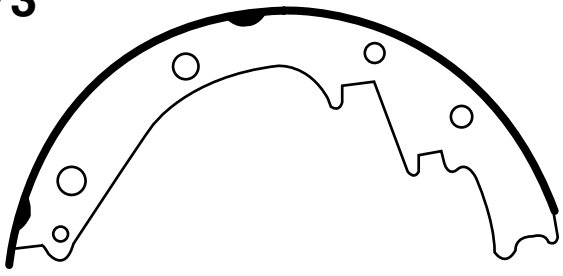

Sold 4 Per Set

MERITOR SHOE NO.	FMSI SHOE NO.	FMSI LINING NO.	SIZE	RIVET
R46473 (LS)	473	2073T	11 11/64" x 2 3/4"	5-

481

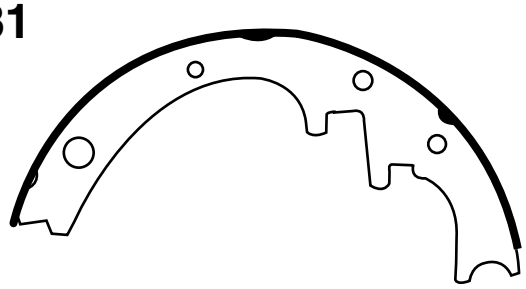

Sold 4 Per Set

MERITOR SHOE NO.	FMSI SHOE NO.	FMSI LINING NO.	SIZE	RIVET
R468134 (LS)	481	2089AT	10" x 2 1/2"	4-4

514

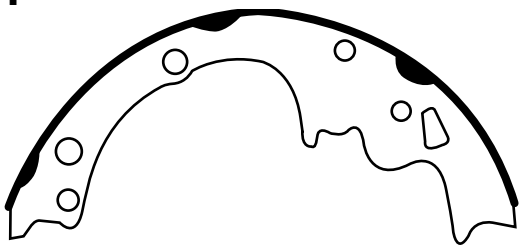

Sold 4 Per Set

MERITOR SHOE NO.	FMSI SHOE NO.	FMSI LINING NO.	SIZE	RIVET
R46514 (LS)	514	2117ATT	9 1/2" x 2"	4-4

538

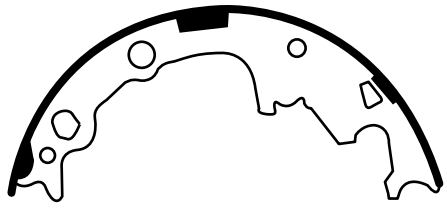

Sold 4 Per Set

MERITOR SHOE NO.	FMSI SHOE NO.	FMSI LINING NO.	SIZE	RIVET
R46538 (LS)	538	2168T	9" x 2 1/2"	3mm

552

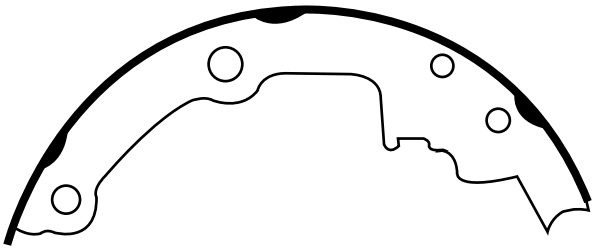

Sold 4 Per Set

MERITOR SHOE NO.	FMSI SHOE NO.	FMSI LINING NO.	SIZE	
R46552 (LS)	552	2165T	8 55/64" x1 49/64"	4-4

569

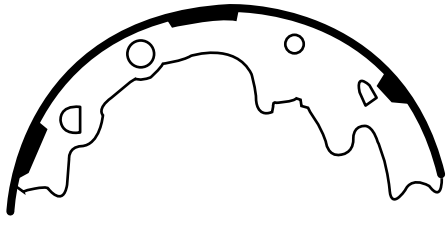

Sold 4 Per Set

MERITOR SHOE NO.	FMSI SHOE NO.	FMSI LINING NO.	SIZE	RIVET
R41569 (LS)	569	2151T	9" x 1 3/4"	4-4

IMPORT BRAKE SHOE

581

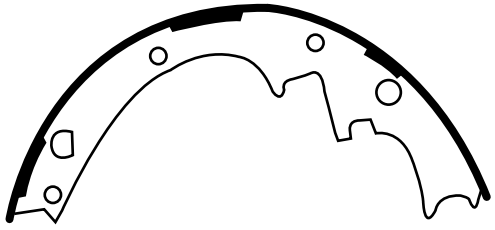

Sold 4 Per Set

MERITOR SHOE NO.	FMSI SHOE NO.	FMSI LINING NO.	SIZE	RIVET
R41581 (LS)	581	2089AT	10" x 2 1/2"	4-4

582

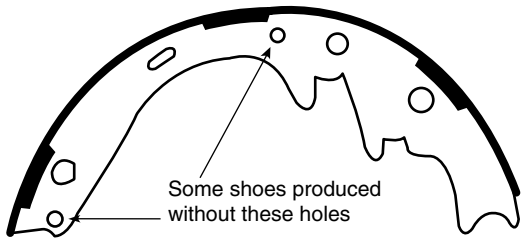

Sold 4 Per Set

MERITOR SHOE NO.	FMSI SHOE NO.	FMSI LINING NO.	SIZE	RIVET
R41582 (LS)	582	2141AT	11 1/32" x 2 1/4"	4-5

583

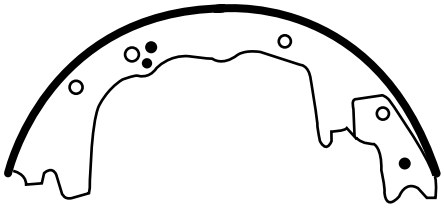

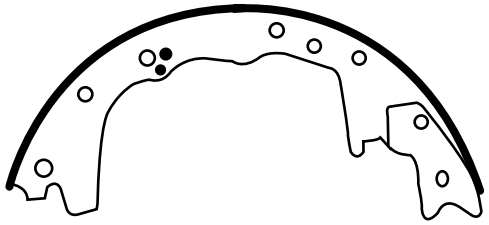

Sold 4 Per Set

MERITOR SHOE NO.	FMSI SHOE NO.	FMSI LINING NO.	SIZE	RIVET
R41583 (LS)	583	2171T	12 1/8" x 3 1/2"	Bonded

593

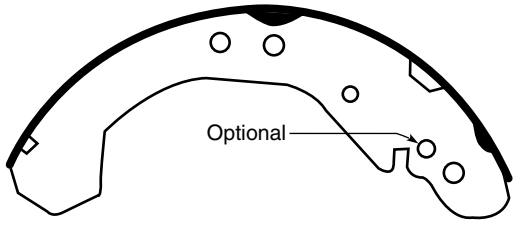

Sold 4 Per Set

MERITOR SHOE NO.	FMSI SHOE NO.	FMSI LINING NO.	SIZE	RIVET
R46593 (LS)	593	1404	10" x 2 1/4"	—

705

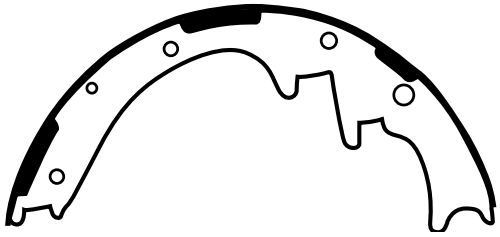

Sold 4 Per Set

MERITOR SHOE NO.	FMSI SHOE NO.	FMSI LINING NO.	SIZE	RIVET
R46705 (LS)	705	2089AT	10" x 2 1/2"	—

S602

Sold 4 Per Set

MERITOR SHOE NO.	FMSI SHOE NO.	FMSI LINING NO.	SIZE	RIVET
R46602 (FT)	S602	1410	370mm x 110mm	

S603

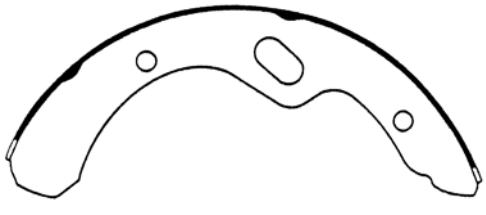

Sold 4 Per Set

MERITOR SHOE NO.	FMSI SHOE NO.	FMSI LINING NO.	SIZE	RIVET
R46603 (FT)	S603	1411	370mm x 100mm Low Deck	

IMPORT BRAKE SHOE

S604

Sold 4 Per Set

MERITOR SHOE NO.	FMSI SHOE NO.	FMSI LINING NO.	SIZE	RIVET
—	S604	—	370mm x 135mm	—

S612

Sold 4 Per Set

MERITOR SHOE NO.	FMSI SHOE NO.	FMSI LINING NO.	SIZE	RIVET
R46612 (FT)	S612	1416	370mm x 75mm	

S613

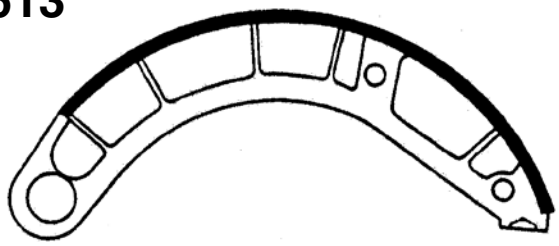

Sold 4 Per Set

MERITOR SHOE NO.	FMSI SHOE NO.	FMSI LINING NO.	SIZE	RIVET
R46613	S613	1418	410mm x 140mm Manual (16.142"x 5.512")	—

S614

Sold 4 Per Set

MERITOR SHOE NO.	FMSI SHOE NO.	FMSI LINING NO.	SIZE	RIVET
R46614	S614	1419	400mm x 154mm	—

S615

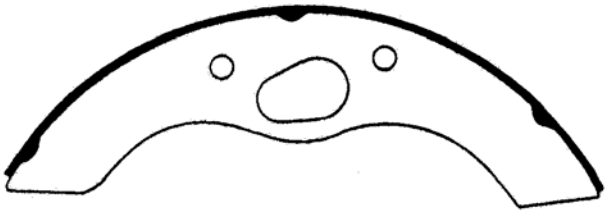

Sold 4 Per Set

MERITOR SHOE NO.	FMSI SHOE NO.	FMSI LINING NO.	SIZE	RIVET
—	S615	1420	400mm x 115mm	—

S616

Sold 4 Per Set

MERITOR SHOE NO.	FMSI SHOE NO.	FMSI LINING NO.	SIZE	RIVET
—	S616	1421	400mm x 115mm	—

S617

Sold 4 Per Set

MERITOR SHOE NO.	FMSI SHOE NO.	FMSI LINING NO.	SIZE	RIVET
R46617	S617	1422	400mm x 115mm	—

S632

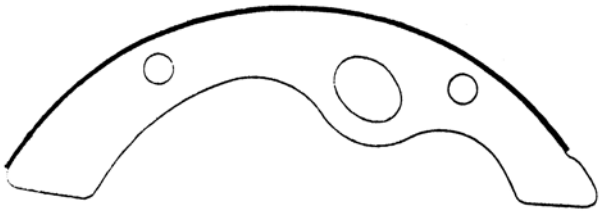

Sold 4 Per Set

MERITOR SHOE NO.	FMSI SHOE NO.	FMSI LINING NO.	SIZE	RIVET
R46632	S632	1434	320mm x 130mm	—

IMPORT BRAKE SHOE

S647

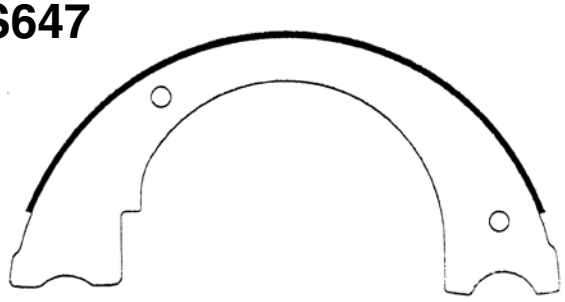

Sold 4 Per Set

MERITOR SHOE NO.	FMSI SHOE NO.	FMSI LINING NO.	SIZE	RIVET
—	S647	2086	9" x 3"	—

S668

Sold 4 Per Set

MERITOR SHOE NO.	FMSI SHOE NO.	FMSI LINING NO.	SIZE	RIVET
—	S668	1454	300mm x 75mm	—

S669

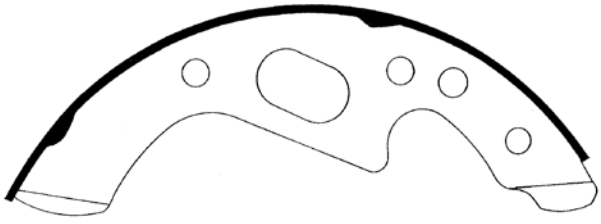

Sold 4 Per Set

MERITOR SHOE NO.	FMSI SHOE NO.	FMSI LINING NO.	SIZE	RIVET
—	S669	1455	320mm x 120mm	—

S672

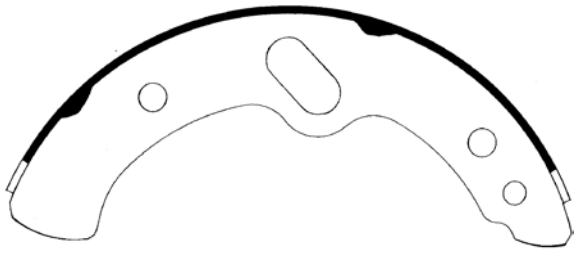

Sold 4 Per Set

MERITOR SHOE NO.	FMSI SHOE NO.	FMSI LINING NO.	SIZE	RIVET
R46672	S672	1458	320mm x 110mm	—

S679

Sold 4 Per Set

MERITOR SHOE NO.	FMSI SHOE NO.	FMSI LINING NO.	SIZE	RIVET
R46679	S679	1464	320mm x 135mm	—

S680

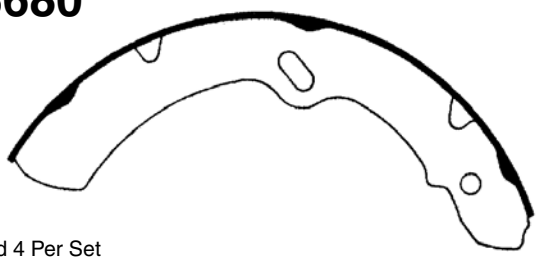

Sold 4 Per Set

MERITOR SHOE NO.	FMSI SHOE NO.	FMSI LINING NO.	SIZE	RIVET
R46680	S680	1465	320mm x 65mm	—

S681

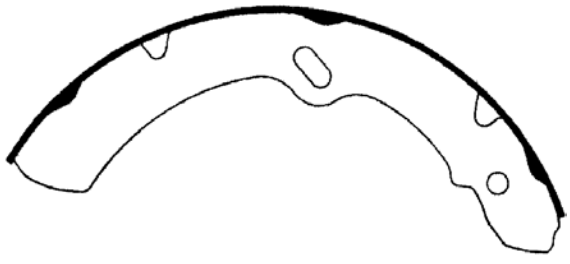

Sold 4 Per Set

MERITOR SHOE NO.	FMSI SHOE NO.	FMSI LINING NO.	SIZE	RIVET
R46681	S681	1466	320mm x 75mm	—

S682

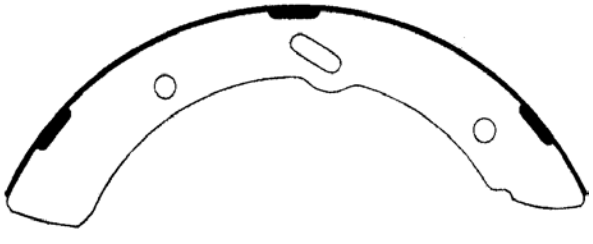

Sold 4 Per Set

MERITOR SHOE NO.	FMSI SHOE NO.	FMSI LINING NO.	SIZE	RIVET
R46682	S682	1467	320mm x 75mm	—

IMPORT BRAKE SHOE

S683

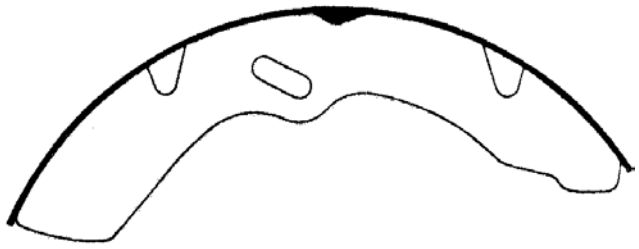

Sold 4 Per Set

MERITOR SHOE NO.	FMSI SHOE NO.	FMSI LINING NO.	SIZE	RIVET
R46683	S683	1468	320mm x 75mm	—

S684

Sold 4 Per Set

MERITOR SHOE NO.	FMSI SHOE NO.	FMSI LINING NO.	SIZE	RIVET
R46684	S684	1469	320mm x 110mm	—

S685

Sold 4 Per Set

MERITOR SHOE NO.	FMSI SHOE NO.	FMSI LINING NO.	SIZE	RIVET
R46685	S685	1470	320mm x 125mm	—

S686

Sold 4 Per Set

MERITOR SHOE NO.	FMSI SHOE NO.	FMSI LINING NO.	SIZE	RIVET
R46686	S686	1419	—	—

S695

Sold 4 Per Set

MERITOR SHOE NO.	FMSI SHOE NO.	FMSI LINING NO.	SIZE	RIVET
R46695	S695	1478	320mm x 90mm	—

S699

Sold 4 Per Set

MERITOR SHOE NO.	FMSI SHOE NO.	FMSI LINING NO.	SIZE	RIVET
R46699	S699	1482	320mm x 100mm	

S717

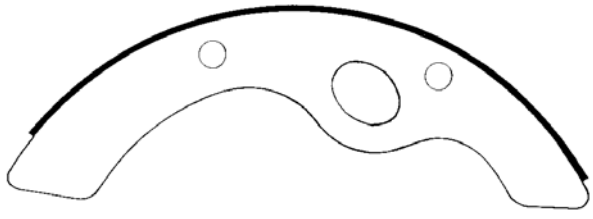

Sold 4 Per Set

MERITOR SHOE NO.	FMSI SHOE NO.	FMSI LINING NO.	SIZE	RIVET
R46717	S717	1464	320mm x 135mm w/ wheel park	—

S718

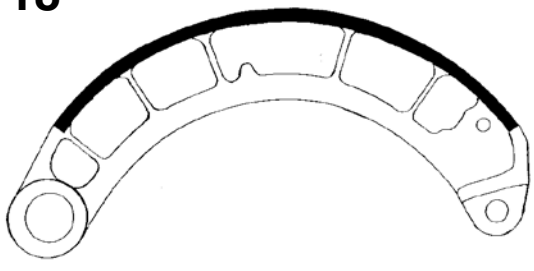

Sold 4 Per Set

MERITOR SHOE NO.	FMSI SHOE NO.	FMSI LINING NO.	SIZE	RIVET
—	S718	1418	410mm x 140mm	—

IMPORT BRAKE SHOE

S726

Sold 4 Per Set

MERITOR SHOE NO.	FMSI SHOE NO.	FMSI LINING NO.	SIZE	RIVET
—	S726	1417	320mm x 75mm	—

S727

Sold 4 Per Set

MERITOR SHOE NO.	FMSI SHOE NO.	FMSI LINING NO.	SIZE	RIVET
—	S727	1498	320mm x 145mm	—

S730

Sold 4 Per Set

MERITOR SHOE NO.	FMSI SHOE NO.	FMSI LINING NO.	SIZE	RIVET
R46730	S730	1501	320mm x 120mm Front wheel Mits	—

S731

Sold 4 Per Set

MERITOR SHOE NO.	FMSI SHOE NO.	FMSI LINING NO.	SIZE	RIVET
R46731	S731	1502	—	—

S792

Sold 4 Per Set

MERITOR SHOE NO.	FMSI SHOE NO.	FMSI LINING NO.	SIZE	RIVET
R46792	S792	1534	311.2mm x 121.9mm	—

S824

Sold 4 Per Set

MERITOR SHOE NO.	FMSI SHOE NO.	FMSI LINING NO.	SIZE	RIVET
—	S824	1556	12" x 3" Park Brake Shoe	—

NOTES

NOTES

XpresswayPlus.ArvinMeritor.com

Don't forget about using *XpresswayPlus* for:

- Ordering parts online
- Order status
- Price and availability
- Invoice Lookup
- Parts Catalog
- Reference Library
- The Company Store
- Literature
- Dealer/Distributor locator
- Online e-mail or phone numbers for Customer Service, Information Services, Marketing, Catalog, and eSupport

XpresswayPlus is easy to use, can reduce phone calls, and save you valuable time.

WHAT YOU NEED:	WHERE TO LOOK:
ACCOUNT CHANGE	CUSTOMER SERVICE
AFTERMARKET & PRODUCTION ASSEMBLIES	CATALOG
APPLICATION INFORMATION	CATALOG
BILL-OF-LADING NUMBER	ORDER STATUS
BILL-OF-MATERIAL	CATALOG
BULLETINS	REFERENCE LIBRARY
CONTACT NAMES & NUMBERS	CUSTOMER SERVICE
FIELD SUPPORT REPRESENTATIVES	CUSTOMER SERVICE
INVOICE (VIEW & PRINT)	ORDER STATUS
NEWSLETTER	REFERENCE LIBRARY
ORDER DETAILS	ORDER STATUS
ORDER HISTORY FILE	ORDER STATUS
ORDER MERCHANDISE	COMPANY STORE
ORDER SUBMIT	CREATE NEW ORDER
ORDER SUBMIT - STOCK UPLOAD (MULTIPLE LINES)	CREATE NEW ORDER
PART DETAILS	CATALOG
PART IMAGES	CATALOG
PART NUMBER COMPARISON	CATALOG
PARTS BOOKS	REFERENCE LIBRARY
PASSWORD CHANGE	CUSTOMER SERVICE
PRICE (LIST)	CATALOG
PRICE (NET) & AVAILABILITY	PRICE & AVAILABILITY
PRODUCT BROCHURES	REFERENCE LIBRARY
PRODUCT UPDATES	REFERENCE LIBRARY
PROOF-OF-DELIVERY	ORDER STATUS
REQUEST-FOR-QUOTATION (FOR MERITOR BRAND)	PRICE REQUEST
SALES LITERATURE	REFERENCE LIBRARY
SEND QUESTIONS, COMMENTS, ISSUES	CONTACT US
SHIPPER NUMBER	ORDER STATUS
TECH TIPS	REFERENCE LIBRARY
TRACKING NUMBER	ORDER STATUS
WARRANTY INFORMATION	REFERENCE LIBRARY
WHERE-USED INFORMATION	CATALOG

MERITOR®
an ArvinMeritor™ brand

Product Illustrations and Photos

Section 6

HYDRAULIC DISC BRAKE CALIPERS

Listed By Casting Number

CASTING NO.	MERITOR CALIPER PART NO.	NO. OF PISTONS	PISTON DIA.
418	**R42R55688**	1	3.39" (3 25/64")
418	**R42L55688**	1	3.39" (3 25/64")
418	**R42LV55688**	1	3.39" (3 25/64")
419	**R42R55687**	1	3.39" (3 25/64")
419	**R42L55687**	1	3.39" (3 25/64")
419	**R42LV55687**	1	3.39" (3 25/64")
0456	**60050145**	2	2.88"
0456	**60040145X**	2	2.88"
0456	**60050145XL**	2	2.88"
0456	**60050145XV**	2	2.88"
518	**R4212275**	2	57mm
0578	**60050145**	2	2.88"
0578	**60040145X**	2	2.88"
0578	**60050145XL**	2	2.88"
0578	**60050145XV**	2	2.88"
632	**R42R55496**	1	3.156" (3 5/32")
632	**R42L55496**	1	3.156" (3 5/32")
632	**R42LV55496**	1	3.156" (3 5/32")
633	**R42R55497**	1	3.156" (3 5/32")
633	**R42L55497**	1	3.156" (3 5/32")
633	**R42LV55497**	1	3.156" (3 5/32")
5609	**R4212274**	2	57mm
5702	**R4212275**	2	57mm
5702	**R4212276**	2	57mm
5705	**R4212273**	2	57mm
5705	**R4212274**	2	57mm
22602	**60050150**	2	2.50"
22602	**60050150X**	2	2.50"
22602	**60050150XL**	2	2.50"
22602	**60050150XV**	2	2.50"
120684	**R4255604**	2	60mm
120684	**R4255605**	2	60mm
127951	**R4255748**	2	56mm
127951	**R42R55748**	2	56mm
127951	**R42L55748**	2	56mm
127951	**R42LV55748**	2	56mm
127951	**R4255749**	2	56mm
127951	**R42R55749**	2	56mm
127951	**R42L55749**	2	56mm
127951	**R42LV55749**	2	56mm
129297	**R4255794**	2	51mm
129297	**R42R55794**	2	51mm
129297	**R42L55794**	2	51mm

CASTING NO.	MERITOR CALIPER PART NO.	NO. OF PISTONS	PISTON DIA.
129297	**R42LV55794**	2	51mm
129297	**R4255795**	2	51mm
129297	**R42R55795**	2	51mm
129297	**R42L55795**	2	51mm
129297	**R42LV55795**	2	51mm
130307	**R4255861**	2	60mm
130307	**R42R55861**	2	60mm
130307	**R42L55861**	2	60mm
130307	**R42LV55861**	2	60mm
130307	**R4255862**	2	60mm
130307	**R42R55862**	2	60mm
130307	**R42L55862**	2	60mm
130307	**R42LV55862**	2	60mm
131072	**R4255915**	2	54mm
131072	**R42R55915**	2	54mm
131072	**R4255916**	2	54mm
131072	**R42R55916**	2	54mm
131072	**R4255865**	2	54mm
131072	**R42R55865**	2	54mm
131072	**R42L55865**	2	54mm
131072	**R42LV55865**	2	54mm
131072	**R4255866**	2	54mm
131072	**R42R55866**	2	54mm
131072	**R42L55866**	2	54mm
131072	**R42LV55866**	2	54mm
131447	**R4255887**	2	56mm
131447	**R42R55887**	2	56mm
131447	**R42L55887**	2	56mm
131447	**R42LV55887**	2	56mm
131447	**R4255888**	2	56mm
131447	**R42R55888**	2	56mm
131447	**R42L55888**	2	56mm
131447	**R42LV55888**	2	56mm
132705	**R4255857**	2	45mm
132705	**R42R55857**	2	45mm
132705	**R42L55857**	2	45mm
132705	**R42LV55857**	2	45mm
132705	**R4255858**	2	45mm
132705	**R42R55858**	2	45mm
132705	**R42L55858**	2	45mm
132705	**R42LV55858**	2	45mm
134247	**R4255748**	2	56mm
134247	**R42R55748**	2	56mm

* Caliper RH / LH designations are determined by clocking mount on the axle.
** Parts not supplied with these calipers

HYDRAULIC DISC BRAKE CALIPERS

Listed By Casting Number

CASTING NO.	MERITOR CALIPER PART NO.	NO. OF PISTONS	PISTON DIA.
134247	**R42L55748**	2	56mm
134247	**R42LV55748**	2	56mm
134247	**R4255749**	2	56mm
134247	**R42R55749**	2	56mm
134247	**R42L55749**	2	56mm
134247	**R42LV55749**	2	56mm
134248	**R4255889**	2	56mm
134248	**R42R55889**	2	56mm
134248	**R42L55889**	2	56mm
134248	**R42LV55889**	2	56mm
134248	**R4255890**	2	56mm
134248	**R42R55890**	2	56mm
134248	**R42L55890**	2	56mm
134248	**R42LV55890**	2	56mm
134248	**R421005093266AA**	2	56mm
134248	**R421005093269AA**	2	56mm
134254	**R4255887**	2	56mm
134254	**R42R55887**	2	56mm
134254	**R42L55887**	2	56mm
134254	**R42LV55887**	2	56mm
134254	**R4255888**	2	56mm
134254	**R42R55888**	2	56mm
134254	**R42L55888**	2	56mm
134254	**R42LV55888**	2	56mm
135607	**R4212067**	2	66mm
135607	**R42R12067**	2	66mm
135607	**R42L12067**	2	66mm
135607	**R42LV12067**	2	66mm
136743	**R4212068**	2	60mm
136743	**R42R12068**	2	60mm
136743	**R42L12068**	2	60mm
136743	**R42LV12068**	2	60mm
137149	**R4255915**	2	54mm
137149	**R42R55915**	2	54mm
137149	**R4255916**	2	54mm
137149	**R42R55916**	2	54mm
137149	**R4255865**	2	54mm
137149	**R42R55865**	2	54mm
137149	**R42L55865**	2	54mm
137149	**R42LV55865**	2	54mm
137149	**R4255866**	2	54mm
137149	**R42R55866**	2	54mm
137149	**R42L55866**	2	54mm

CASTING NO.	MERITOR CALIPER PART NO.	NO. OF PISTONS	PISTON DIA.
137149	**R42LV55866**	2	54mm
142296	**R4212083**	2	60mm
142296	**R42R12083**	2	60mm
142296	**R42L12083**	2	60mm
142296	**R42LV12083**	2	60mm
142296	**R4212084**	2	60mm
142296	**R42R12084**	2	60mm
142296	**R42L12084**	2	60mm
142296	**R42LV12084**	2	60mm
142298	**R4212253**	2	60mm
142298	**R42R12253**	2	60mm
142298	**R42L12253**	2	60mm
142298	**R42LV12253**	2	60mm
142298	**R4212254**	2	60mm
142298	**R42R12254**	2	60mm
142298	**R42L12254**	2	60mm
142298	**R42LV12254**	2	60mm
143477	**R4255915**	2	54mm
143477	**R42R55915**	2	54mm
143477	**R4255916**	2	54mm
143477	**R42R55916**	2	54mm
143477	**R4255865**	2	54mm
143477	**R42R55865**	2	54mm
143477	**R42L55865**	2	54mm
143477	**R42LV55865**	2	54mm
143477	**R4255866**	2	54mm
143477	**R42R55866**	2	54mm
143477	**R42L55866**	2	54mm
143477	**R42LV55866**	2	54mm
143477	**R421005102062AA**	2	54mm
143477	**R421005102063AA**	2	54mm
144138	**R4212248**	2	54mm
144138	**R42R12248**	2	54mm
144138	**R42L12248**	2	54mm
144138	**R42LV12248**	2	54mm
144138	**R4212249**	2	54mm
144138	**R42R12249**	2	54mm
144138	**R42L12249**	2	54mm
144138	**R42LV12249**	2	54mm
144150	**R4212243**	2	48mm
144150	**R42R12243**	2	48mm
144150	**R42L12243**	2	48mm
144150	**R42LV12243**	2	48mm

* Caliper RH / LH designations are determined by clocking mount on the axle.
** Parts not supplied with these calipers

HYDRAULIC DISC BRAKE CALIPERS

Listed By Casting Number

CASTING NO.	MERITOR CALIPER PART NO.	NO. OF PISTONS	PISTON DIA.
144150	**R4212244**	2	48mm
144150	**R42R12244**	2	48mm
144150	**R42L12244**	2	48mm
144150	**R42LV12244**	2	48mm
145513	**R4212069**	2	66mm
145513	**R42R12069**	2	66mm
145513	**R42L12069**	2	66mm
145513	**R42LV12069**	2	66mm
152280	**R4255915**	2	54mm
152280	**R42R55915**	2	54mm
152280	**R4255916**	2	54mm
152280	**R42R55916**	2	54mm
152280	**R4255865**	2	54mm
152280	**R42R55865**	2	54mm
152280	**R42L55865**	2	54mm
152280	**R42LV55865**	2	54mm
152280	**R4255866**	2	54mm
152280	**R42R55866**	2	54mm
152280	**R42L55866**	2	54mm
152280	**R42LV55866**	2	54mm
152280	**R421005102062AA**	2	54mm
152280	**R421005102063AA**	2	54mm
154518	**R4212077**	2	60mm
154518	**R42R12077**	2	60mm
154518	**R42L12077**	2	60mm
154518	**R42LV12077**	2	60mm
154518	**R4212078**	2	60mm
154518	**R42R12078**	2	60mm
154518	**R42L12078**	2	60mm
154518	**R42LV12078**	2	60mm
415733	**R4255313**	2	2.60"
415733	**R42R55313**	2	2.60"
415733	**R42L55313**	2	2.60"
415733	**R42LV55313X**	2	2.60"
2238229	**R42R55245**	2	2.60"
2238229	**R42L55245**	2	2.60"
2238229	**R42LV55245**	2	2.60"
4150344	**R4255250**	2	2.88"
4150344	**R42R55250**	2	2.88"
4150344	**R42L55250**	2	2.88"
4150344	**R42LV55250**	2	2.88"
4150844	**R4255250**	2	2.88"
4150844	**R42R55250**	2	2.88"

CASTING NO.	MERITOR CALIPER PART NO.	NO. OF PISTONS	PISTON DIA.
4150844	**R42L55250**	2	2.88"
4150844	**R42LV55250**	2	2.88"
4151020	**R42R55245**	2	2.60"
4151020	**R42L55245**	2	2.60"
4151020	**R42LV55245**	2	2.60"
4151733	**R4255717**	2	2.60"
4151733	**R42R55717**	2	2.60"
4151733	**R42L55717**	2	2.60"
4151733	**R42LV55717**	2	2.60"
4152279	**R4255656**	2	2.88"
4152279	**R42R55656**	2	2.88"
4152279	**R42L55656**	2	2.88"
4152279	**R42LV55656**	2	2.88"
4153222	**R4255850**	2	73mm
4153222	**R424153216**	2	73mm
4153222	**R42R55850**	2	73mm
4153222	**R42L55850**	2	73mm
4153222	**R42LV55850**	2	73mm
4153269	**R4255849**	2	66mm
4153269	**R424153263**	2	66mm
4153269	**R42R55849**	2	66mm
4153269	**R42L55849**	2	66mm
4153269	**R42LV55849**	2	66mm
12068401	**R42R55604**	2	60mm (2.362")
12068401	**R42L55604**	2	60mm (2.362")
12068401	**R42LV55604**	2	60mm (2.362")
12068401	**R42R55605**	2	60mm (2.362")
12068401	**R42L55605**	2	60mm (2.362")
12068401	**R42LV55605**	2	60mm (2.362")
13544401	**R4255972**	2	51mm
13544401	**R42R55972**	2	51mm
13544401	**R42L55972**	2	51mm
13544401	**R42LV55972**	2	51mm
13544401	**R4255973**	2	51mm
13544401	**R42R55973**	2	51mm
13544401	**R42L55973**	2	51mm
13544401	**R42LV55973**	2	51mm
13544402	**R4255966**	2	45mm
13544402	**R42R55966**	2	45mm
13544402	**R42L55966**	2	45mm
13544402	**R42LV55966**	2	45mm
13544402	**R4255967**	2	45mm
13544402	**R42R55967**	2	45mm

* Caliper RH / LH designations are determined by clocking mount on the axle.
** Parts not supplied with these calipers

HYDRAULIC DISC BRAKE CALIPERS

Listed By Casting Number

CASTING NO.	MERITOR CALIPER PART NO.	NO. OF PISTONS	PISTON DIA.
13544402	**R42L55967**	2	45mm
13544402	**R42LV55967**	2	45mm
14599301	**R4255966**	2	45mm
14599301	**R42R55966**	2	45mm
14599301	**R42L55966**	2	45mm
14599301	**R42LV55966**	2	45mm
14599301	**R4255967**	2	45mm
14599301	**R42R55967**	2	45mm
14599301	**R42L55967**	2	45mm
14599301	**R42LV55967**	2	45mm
2238451L	**R4255099**	1	3.38" (3 3/8")
2238451L	**R42R55099**	1	3.38" (3 3/8")
2238451L	**R42L55099**	1	3.38" (3 3/8")
2238451L	**R42LV55099**	1	3.38" (3 3/8")
2238452R	**R4255098**	1	3.38" (3 3/8")
2238452R	**R42R55098**	1	3.38" (3 3/8")
2238452R	**R42L55098**	1	3.38" (3 3/8")
2238452R	**R42LV55098**	1	3.38" (3 3/8")
472-W	**60050150**	2	2.50"
472-W	**60050150X**	2	2.50"
472-W	**60050150XL**	2	2.50"
472-W	**60050150XV**	2	2.50"
4Z15	**R4212273**	2	57mm
54D	**R4212276**	2	57mm
A940	**R4212273**	2	57mm
A940	**R4212274**	2	57mm
AD57T	**R4212275**	2	57mm
AD57T	**R4212276**	2	57mm
VFCC 0005-1	**R42R7178**	2	73mm
VFCC 2284-5	**R42R7179**	2	73mm

* Caliper RH / LH designations are determined by clocking mount on the axle.
** Parts not supplied with these calipers

HYDRAULIC DISC BRAKE CALIPERS

Listed By Part Number

Meritor Caliper Part No.	Replaces Bendix No.	Position	No. Of Pistons	Piston Dia.	Description	Meritor Disc Pad Set No.	Hardware Kit Number
R4255656	55656	R/H & L/H Front or Rear	2	2.88"	Bare Caliper New		
R42R55656	R55656	R/H & L/H Front or Rear	2	2.88"	Caliper Remanufactured		
R42L55656		R/H & L/H Front or Rear	2	2.88"	Loaded Caliper 2.88bx W/Air supsension	**MD225**	**R40H5522**
R42LV55656	L55656LM / RM	R/H & L/H Front or Rear	2	2.88"	Loaded Caliper 2.88bx W/Air supsension	**MVD225**	**R40H5522**
60050150	55251	R/H & L/H Front or Rear	2	2.50"	Bare Caliper New		
60050150X	R55251	R/H & L/H Front or Rear	2	2.50"	Caliper Remanufactured		
60050150XL	L55251PREM	R/H & L/H Front or Rear	2	2.50"	Loaded Caliper	**MD224**	**60050153**
60050150XV	L55251M	R/H & L/H Front or Rear	2	2.50"	Loaded Caliper	**MVD224**	**60050153**
R4255313	55313	R/H & L/H Front or Rear	2	2.60"	Bare Caliper New		
R42R55313	R55313	R/H & L/H Front or Rear	2	2.60"	Caliper Remanufactured		
R42L55313		R/H & L/H Front or Rear	2	2.60"	Loaded Caliper	**MD380**	**R40H5522**
R42LV55313X	L55313M	R/H & L/H Front or Rear	2	2.60"	Loaded Caliper	**MVD380**	**R40H5522**
60050312		* See Foot Note	4	70mm	Loaded Caliper New Quadraulic 70mm SP	**MD769**	**R4011121**
60050312X		* See Foot Note	4	70mm	Caliper Remanufactured Quadraulic 70mm SP		
60050312XL		* See Foot Note	4	70mm	Loaded Caliper Remanufactured Quadraulic 70mm SP	**MD769**	**R4011121**
60050312XV		* See Foot Note	4	70mm	Loaded Caliper Remanufactured Quadraulic 70mm SP	**MVD769**	**R4011121**
60050313		* See Foot Note	4	70mm	Loaded Caliper New Quadraulic 70mm SP	**MD769**	**R4011121**
60050313X		* See Foot Note	4	70mm	Caliper Remanufactured Quadraulic 70mm SP		
60050313XL		* See Foot Note	4	70mm	Loaded Caliper Remanufactured Quadraulic 70mm SP	**MD769**	**R4011121**
60050313XV		* See Foot Note	4	70mm	Loaded Caliper Remanufactured Quadraulic 70mm SP	**MVD769**	**R4011121**
R42R55687	R55687	R/H	1	3.39" (3 25/64")	Caliper 96-00 C3500 LD		
R42L55687	L55687FM	R/H	1	3.39" (3 25/64")	Loaded Caliper Remanufactured	**MD459**	**R40H5788**
R42LV55687	L55687M	R/H	1	3.39" (3 25/64")	Loaded Caliper Remanufactured	**MVD459**	**R40H5788**
R42R55688	R55688	L/H	1	3.39" (3 25/64")	Caliper 96-00 C3500 LD		
R42L55688	L55688FM	L/H	1	3.39" (3 25/64")	Loaded Caliper Remanufactured	**MD459**	**R40H5788**
R42LV55688	L55688M	L/H	1	3.39" (3 25/64")	Loaded Caliper Remanufactured	**MVD459**	**R40H5788**
R42R55748	R55748	R/H	2	56mm	Caliper Remanufactured		
R42L55748	L55748FM	R/H	2	56mm	Loaded Caliper Remanufactured	**MD655**	**R4012262**

* Caliper RH / LH designations are determined by clocking mount on the axle.
** Parts not supplied with these calipers

HYDRAULIC DISC BRAKE CALIPERS

Listed By Part Number

Meritor Caliper Part No.	Replaces Bendix No.	Position	No. Of Pistons	Piston Dia.	Description	Meritor Disc Pad Set No.	Hardware Kit Number
R42LV55748	L55748M	R/H	2	56mm	Loaded Caliper Remanufactured	**MVD655**	**R4012262**
R42R55749	R55749	L/H	2	56mm	Caliper Remanufactured		
R42L55749	L55749FM	L/H	2	56mm	Loaded Caliper Remanufactured	**MD655**	**R4012262**
R42LV55749	L55749M	L/H	2	56mm	Loaded Caliper Remanufactured	**MVD655**	**R4012262**
60450454		* See Foot Note	4	70mm	Loaded Caliper New Quadraulic 70mm SP	**MD769**	**R4011121**
60050320X		* See Foot Note	4	70mm	Caliper Remanufactured Quadraulic 70mm SP		
60050320XL		* See Foot Note	4	70mm	Loaded Caliper Remanufactured Quadraulic 70mm SP	**MD769**	**R4011121**
60050320XV		* See Foot Note	4	70mm	Loaded Caliper Remanufactured Quadraulic 70mm SP	**MVD769**	**R4011121**
60450455		* See Foot Note	4	70mm	Loaded Caliper New Quadraulic 70mm SP	**MD769**	**R4011121**
60050321X		* See Foot Note	4	70mm	Caliper Remanufactured Quadraulic 70mm SP		
60050321XL		* See Foot Note	4	70mm	Loaded Caliper Remanufactured Quadraulic 70mm SP	**MD769**	**R4011121**
60050321XV		* See Foot Note	4	70mm	Loaded Caliper Remanufactured Quadraulic 70mm SP	**MVD769**	**R4011121**
60450482004		* See Foot Note	4	70mm	Loaded Caliper New Quadraulic 70mm PP	**MD769**	**R4011121**
60450482X		* See Foot Note	4	70mm	Caliper Remanufactured Quadraulic 70mm PP		
60450482XL		* See Foot Note	4	70mm	Loaded Caliper Remanufactured Quadraulic 70mm PP	**MD769**	**R4011729**
60450482XV		* See Foot Note	4	70mm	Loaded Caliper Remanufactured Quadraulic 70mm PP	**MVD769**	**R4011729**
60450483004		* See Foot Note	4	70mm	Loaded Caliper New Quadraulic 70mm PP	**MD769**	**R4011729**
60450483X		* See Foot Note	4	70mm	Caliper Remanufactured Quadraulic 70mm PP		
60450483XL		* See Foot Note	4	70mm	Loaded Caliper Remanufactured Quadraulic 70mm PP	**MD769**	**R4011729**
60450483XV		* See Foot Note	4	70mm	Loaded Caliper Remanufactured Quadraulic 70mm PP	**MVD769**	**R4011729**
60450480004		* See Foot Note	4	64mm	Loaded Caliper New Quadraulic 64mm PP	**MD769**	**R4011729**
60450480X		* See Foot Note	4	64mm	Caliper Remanufactured Quadraulic 64mm PP		
60450480XL		* See Foot Note	4	64mm	Loaded Caliper Remanufactured Quadraulic 64mm PP	**MD769**	**R4011729**
60450480XV		* See Foot Note	4	64mm	Loaded Caliper Remanufactured Quadraulic 64mm PP	**MVD769**	**R4011729**
60450481004		* See Foot Note	4	64mm	Loaded Caliper New Quadraulic 64mm PP	**MD769**	**R4011729**
60450481004		* See Foot Note	4	64mm	Caliper Remanufactured Quadraulic 64mm PP		

* Caliper RH / LH designations are determined by clocking mount on the axle.
** Parts not supplied with these calipers

HYDRAULIC DISC BRAKE CALIPERS

Listed By Part Number

Meritor Caliper Part No.	Replaces Bendix No.	Position	No. Of Pistons	Piston Dia.	Description	Meritor Disc Pad Set No.	Hardware Kit Number
60450481XL		* See Foot Note	4	64mm	Loaded Caliper Remanufactured Quadraulic 64mm PP	**MD769**	**R4011729**
60450481XV		* See Foot Note	4	64mm	Loaded Caliper Remanufactured Quadraulic 64mm PP	**MVD769**	**R4011729**
R4255849	55849ZOH	R/H & L/H	2	66mm	Bare Caliper New 66mm Bosch		
R424153263		R/H & L/H	2	66mm	Loaded Caliper New 66mm Bosch	**MD786A**	**R4011754**
R42R55849	R55849	R/H & L/H	2	66mm	Caliper Remanufactured 66mm Bosch		
R42L55849		R/H & L/H	2	66mm	Loaded Caliper Remanufactured 66mm Bosch	**MD786A**	**R4011754**
R42LV55849	L55849PM	R/H & L/H	2	66mm	Loaded Caliper Remanufactured 66mm Bosch	**MVD786A**	**R4011754**
R4255850	55850ZOH	R/H & L/H	2	73mm	Bare Caliper New 73mm Bosch		
R424153216		R/H & L/H	2	73mm	Loaded Caliper New 73mm Bosch	**MD786**	**R4011754**
R42R55850	R55850	R/H & L/H	2	73mm	Caliper Remanufactured 73mm Bosch		
R42L55850		R/H & L/H	2	73mm	Loaded Caliper Remanufactured 73mm Bosch	**MD786**	**R4011754**
R42LV55850	L55850PM	R/H & L/H	2	73mm	Loaded Caliper Remanufactured 73mm Bosch	**MVD786**	**R4011754**
R4255861	55861	R/H Front & L/H Rear	2	66mm	Bare Caliper New F450		
R42R55861	R55861	R/H Front & L/H Rear	2	66mm	Caliper RemanuFactured F450		
R42L55861		R/H Front & L/H Rear	2	66mm	Loaded Caliper RemanuFactured F450	**MD777**	**R40H15088**
R42LV55861	L55861PM	R/H Front & L/H Rear	2	66mm	Loaded Caliper RemanuFactured F450	**MVD777**	**R40H15088**
R4255862	55862	L/H Front & R/H Rear	2	66mm	Bare Caliper New F450		
R42R55862	R55862	L/H Front & R/H Rear	2	66mm	Caliper RemanuFactured F450		
R42L55862		L/H Front & R/H Rear	2	66mm	Loaded Caliper RemanuFactured F450	**MD777**	**R40H15088**
R42LV55862	L55862PM	L/H Front & R/H Rear	2	66mm	Loaded Caliper RemanuFactured F450	**MVD777**	**R40H15088**
R4255857	55857	R/H Rear	2	45mm	Bare Caliper New		
R42R55857	R55857	R/H Rear	2	45mm	Caliper Remanufactured		
R42L55857	L55857PFM	R/H Rear	2	45mm	Loaded Caliper Remanufactured	**MD411**	**R40H5916**
R42LV55857	L55857PM	R/H Rear	2	45mm	Loaded Caliper Remanufactured	**MVD411**	**R40H5916**
R4255858	55858	L/H Rear	2	45mm	Bare Caliper New		
R42R55858	R55858	L/H Rear	2	45mm	Caliper Remanufactured		
R42L55858	L55858PFM	L/H Rear	2	45mm	Loaded Caliper Remanufactured	**MD411**	**R40H5916**
R42LV55858	L55858PM	L/H Rear	2	45mm	Loaded Caliper Remanufactured	**MVD411**	**R40H5916**
R4255915	55915	R/H	2	54mm	Bare Caliper New		
R42R55915	R55915	R/H	2	54mm	Caliper Remanufactured		
R4255916	55916	L/H	2	54mm	Bare Caliper New		
R42R55916	R55916	L/H	2	54mm	Caliper Remanufactured		
R4255887	55887	R/H	2	56mm	Bare Caliper New		
R42R55887	R55887	R/H	2	56mm	Caliper Remanufactured		
R42L55887	L55887PFM	R/H	2	56mm	Loaded Caliper Remanufactured	**MD655**	**R40H5864**

* Caliper RH / LH designations are determined by clocking mount on the axle.
** Parts not supplied with these calipers

HYDRAULIC DISC BRAKE CALIPERS

Listed By Part Number

Meritor Caliper Part No.	Replaces Bendix No.	Position	No. Of Pistons	Piston Dia.	Description	Meritor Disc Pad Set No.	Hardware Kit Number
R42LV55887		R/H	2	56mm	Loaded Caliper Remanufactured	**MVD655**	**R40H5864**
R4255888	55888	L/H	2	56mm	Bare Caliper New		
R42R55888	R55888	L/H	2	56mm	Caliper Remanufactured		
R42L55888	L55888PFM	L/H	2	56mm	Loaded Caliper Remanufactured	**MD655**	**R40H5864**
R42LV55888		L/H	2	56mm	Loaded Caliper Remanufactured	**MVD655**	**R40H5864**
R4255889	55889	R/H	2	56mm	Bare Caliper New		
R42R55889	R55889	R/H	2	56mm	Caliper Remanufactured		
R42L55889		R/H	2	56mm	Loaded Caliper Remanufactured	**MD821**	**R40H5975**
R42LV55889	L55889PM	R/H	2	56mm	Loaded Caliper Remanufactured	**MVD821**	**R40H5975**
R4255890		L/H	2	56mm	Bare Caliper New		
R42R55890	R55890	L/H	2	56mm	Caliper Remanufactured		
R42L55890		L/H	2	56mm	Loaded Caliper Remanufactured	**MD821**	**R40H5975**
R42LV55890	L55890PM	L/H	2	56mm	Loaded Caliper Remanufactured	**MVD821**	**R40H5975**
R4212067		R/H & L/H	2	66mm	Bare Caliper New		
R42R12067	R56520P	R/H & L/H	2	66mm	Bare Caliper Remanufactured		
R42L12067		R/H & L/H	2	66mm	Loaded Caliper Remanufactured	**MD1010**	**R4012072**
R42LV12067		R/H & L/H	2	66mm	Loaded Caliper Remanufactured	**MVD1010**	**R4012072**
R4212068		R/H & L/H	2	60mm	Bare Caliper New		
R42R12068		R/H & L/H	2	60mm	Bare Caliper Remanufactured		
R42L12068		R/H & L/H	2	60mm	Loaded Caliper Remanufactured	**MD1010**	**R4012072**
R42LV12068		R/H & L/H	2	60mm	Loaded Caliper Remanufactured	**MVD1010**	**R4012072**
R4212069		R/H & L/H	2	66mm	Bare Caliper New		
R42R12069		R/H & L/H	2	66mm	Bare Caliper Remanufactured		
R42L12069		R/H & L/H	2	66mm	Loaded Caliper Remanufactured	**MD1064**	**R4012072**
R42LV12069		R/H & L/H	2	66mm	Loaded Caliper Remanufactured	**MVD1064**	**R4012072**
R4255604	55604	R/H	2	60mm	Bare Caliper New / for reman use e-9181x		
R4255605	55605	L/H	2	60mm	Bare Caliper New / for reman use e-9182x		
R4212077		R/H	2	60mm	Bare Caliper New		
R42R12077		R/H	2	60mm	Caliper Remanufactured		
R42L12077		R/H	2	60mm	Loaded Caliper Remanufactured	**MD1069**	**R4012081**
R42LV12077		R/H	2	60mm	Loaded Caliper Remanufactured	**MVD1069**	**R4012081**
R4212078		L/H	2	60mm	Bare Caliper New		
R42R12078		L/H	2	60mm	Caliper Remanufactured		
R42L12078		L/H	2	60mm	Loaded Caliper Remanufactured	**MD1069**	**R4012081**
R42LV12078		L/H	2	60mm	Loaded Caliper Remanufactured	**MVD1069**	**R4012081**
R4212083		R/H	2	60mm	Bare Caliper New		
R42R12083		R/H	2	60mm	Caliper Remanufactured		
R42L12083		R/H	2	60mm	Loaded Caliper Remanufactured	**MD1069**	

* Caliper RH / LH designations are determined by clocking mount on the axle.
** Parts not supplied with these calipers

HYDRAULIC DISC BRAKE CALIPERS

Listed By Part Number

Meritor Caliper Part No.	Replaces Bendix No.	Position	No. Of Pistons	Piston Dia.	Description	Meritor Disc Pad Set No.	Hardware Kit Number
R42LV12083		R/H	2	60mm	Loaded Caliper Remanufactured	**MVD1069**	
R4212084		L/H	2	60mm	Bare Caliper New		
R42R12084		L/H	2	60mm	Caliper Remanufactured		
R42L12084		L/H	2	60mm	Loaded Caliper Remanufactured	**MD1069**	
R42LV12084		L/H	2	60mm	Loaded Caliper Remanufactured	**MVD1069**	
R4212086		R/H & L/H	2	2.18"	Bare Caliper New 2.18 piston		
R4255865	55865	R/H	2	54mm	Bare Caliper New		
R42R55865	R55865	R/H	2	54mm	Caliper Remanufactured		
R42L55865	L55865PFM	R/H	2	54mm	Loaded Caliper Remanufactured	**MD758**	**R40H15068**
R42LV55865	L55865PM	R/H	2	54mm	Loaded Caliper Remanufactured	**MVD758**	**R40H15068**
R4255866	55866	L/H	2	54mm	Bare Caliper New		
R42R55866	R55866	L/H	2	54mm	Caliper Remanufactured		
R42L55866	L55866PFM	L/H	2	54mm	Loaded Caliper Remanufactured	**MD758**	**R40H15068**
R42LV55866	L55866PM	L/H	2	54mm	Loaded Caliper Remanufactured	**MVD758**	**R40H15068**
R421005102062AA		R/H	2	54mm	Bare Caliper New		
R421005102063AA		L/H	2	54mm	Bare Caliper New		
R421005093266AA		R/H	2	56mm	Bare Caliper New		
R421005093269AA		L/H	2	56mm	Bare Caliper New		
R4212095							**R4012015**
R4212096							
R4255989	55989	R/H	1				
R4255988	55988	L/H	1				
R4256546	56546	L/H Rear	2	44mm	Sprinter Caliper		
R42R56546	R56546	L/H Rear	2	44mm	Sprinter Caliper		
R42L56546	L56546M*	L/H Rear	2	44mm	Sprinter Caliper	**MD949**	
R4256547	56547	R/H Rear	2	44mm	Sprinter Caliper		
R42R56547	R56547	R/H Rear	2	44mm	Sprinter Caliper		
R42L56547	L56547M*	R/H Rear	2	44mm	Sprinter Caliper	**MD949**	
R4256544	56544	L/H Front	2	44mm	Sprinter Caliper		
R42R56544	R56544	L/H Front	2	44mm	Sprinter Caliper		
R42L56544	L56544M*	L/H Front	2	44mm	Sprinter Caliper	**MD949**	
R4256545	56545	R/H Front	2	44mm	Sprinter Caliper		
R42R56545	R56545	R/H Front	2	44mm	Sprinter Caliper		
R42L56545	L56545M*	R/H Front	2	44mm	Sprinter Caliper	**MD949**	
R4255972	55972	R/H Rear	2	51mm	Bare Caliper NEW		
R42R55972	R55972	R/H Rear	2	51mm	Caliper Remanufactured		
R42L55972		R/H Rear	2	51mm	Loaded Caliper Remanufactured	**MD702**	**R40H5707**
R42LV55972		R/H Rear	2	51mm	Loaded Caliper Remanufactured	**MVD702**	**R40H5707**
R4255973	55973	L/H Rear	2	51mm	Bare Caliper NEW		
R42R55973	R55973	L/H Rear	2	51mm	Caliper Remanufactured		
R42L55973		L/H Rear	2	51mm	Loaded Caliper Remanufactured	**MD702**	**R40H5707**
R42LV55973		L/H Rear	2	51mm	Loaded Caliper Remanufactured	**MVD702**	**R40H5707**
R4255966	55966	R/H Rear	2	45mm	Bare Caliper NEW		
R42R55966	R55966	R/H Rear	2	45mm	Caliper Remanufactured		
R42L55966		R/H Rear	2	45mm	Loaded Caliper Remanufactured	**MD702**	**R40H5707**
R42LV55966		R/H Rear	2	45mm	Loaded Caliper Remanufactured	**MVD702**	**R40H5707**

* Caliper RH / LH designations are determined by clocking mount on the axle.

** Parts not supplied with these calipers

HYDRAULIC DISC BRAKE CALIPERS

Listed By Part Number

Meritor Caliper Part No.	Replaces Bendix No.	Position	No. Of Pistons	Piston Dia.	Description	Meritor Disc Pad Set No.	Hardware Kit Number
R4255967	55967	L/H Rear	2	45mm	Bare Caliper NEW		
R42R55967	R55967	L/H Rear	2	45mm	Caliper Remanufactured		
R42L55967		L/H Rear	2	45mm	Loaded Caliper Remanufactured	**MD702**	**R40H5707**
R42LV55967		L/H Rear	2	45mm	Loaded Caliper Remanufactured	**MVD702**	**R40H5707**
R4212243		R/H Front	2	48mm	Bare Caliper NEW		
R42R12243		R/H Front	2	48mm	Caliper Remanufactured		
R42L12243		R/H Front	2	48mm	Loaded Caliper Remanufactured	**MD1069**	**R4012247**
R42LV12243		R/H Front	2	48mm	Loaded Caliper Remanufactured	**MVD1069**	**R4012247**
R4212244		L/H Front	2	48mm	Bare Caliper NEW		
R42R12244		L/H Front	2	48mm	Caliper Remanufactured		
R42L12244		L/H Front	2	48mm	Loaded Caliper Remanufactured	**MD1069**	**R4012247**
R42LV12244		L/H Front	2	48mm	Loaded Caliper Remanufactured	**MVD1069**	**R4012247**
R4212248		R/H	2	54mm	Bare Caliper NEW		
R42R12248		R/H	2	54mm	Caliper Remanufactured		
R42L12248		R/H	2	54mm	Loaded Caliper Remanufactured	**MD1069**	**R4012081**
R42LV12248		R/H	2	54mm	Loaded Caliper Remanufactured	**MVD1069**	**R4012081**
R4212249		L/H	2	54mm	Bare Caliper NEW		
R42R12249		L/H	2	54mm	Caliper Remanufactured		
R42L12249		L/H	2	54mm	Loaded Caliper Remanufactured	**MD1069**	**R4012081**
R42LV12249		L/H	2	54mm	Loaded Caliper Remanufactured	**MVD1069**	**R4012081**
R4212253		R/H	2	60mm	Bare Caliper NEW		
R42R12253		R/H	2	60mm	Caliper Remanufactured		
R42L12253		R/H	2	60mm	Loaded Caliper Remanufactured	**MD1066**	**R4012257**
R42LV12253		R/H	2	60mm	Loaded Caliper Remanufactured	**MVD1066**	**R4012257**
R4212254		L/H	2	60mm	Bare Caliper NEW		
R42R12254		L/H	2	60mm	Caliper Remanufactured		
R42L12254		L/H	2	60mm	Loaded Caliper Remanufactured	**MD1066**	**R4012257**
R42LV12254		L/H	2	60mm	Loaded Caliper Remanufactured	**MVD1066**	**R4012257**
R4255748	55748		2	56mm	Bare Caliper NEW	**MD655****	**R4012262**
R42R55748	Use R42R55748 for Reman and loaded calipers		2	56mm			
R42L55748			2	56mm			
R42LV55748			2	56mm			
R4255749	55749		2	56mm	Bare Caliper NEW	**MD655****	**R4012262**
R42R55749	Use R42L55749 for Reman and loaded calipers		2	56mm			
R42L55749			2	56mm			
R42LV55749			2	56mm			
R4255794	55794	R/H	2	51mm	Bare Caliper NEW		
R42R55794	R55794	R/H	2	51mm	Caliper Remanufactured		**R40H15087**
R42L55794		R/H	2	51mm	Loaded Caliper Remanufactured	**MD702**	**R40H15087**
R42LV55794		R/H	2	51mm	Loaded Caliper Remanufactured	**MVD702**	**R40H15087**
R4255795	55795	L/H	2	51mm	Bare Caliper NEW		
R42R55795	R55795	L/H	2	51mm	Bare Caliper Remanufactured		

* Caliper RH / LH designations are determined by clocking mount on the axle.
** Parts not supplied with these calipers

HYDRAULIC DISC BRAKE CALIPERS

Listed By Part Number

Meritor Caliper Part No.	Replaces Bendix No.	Position	No. Of Pistons	Piston Dia.	Description	Meritor Disc Pad Set No.	Hardware Kit Number
R42L55795		L/H	2	51mm	Loaded Caliper Remanufactured	**MD702**	**R40H15087**
R42LV55795		L/H	2	51mm	Loaded Caliper Remanufactured	**MVD702**	**R40H15087**
R4212269		L/H	2		Isuzu / GM Calipers	**MD827****	**R4012469**
R4212270		R/H	2		Isuzu / GM Calipers	**MD827****	**R4012469**
R4212271X		L/H	2		Isuzu / GM Calipers	**MD825****	**R402212504**
R4212272X		R/H	2		Isuzu / GM Calipers	**MD825****	**R402212504**
R4212273		L/H	2		Isuzu / GM Calipers	**MD827****	**R4012469**
R4212274		R/H	2		Isuzu / GM Calipers	**MD827****	**R4012469**
R4212275		L/H	2		Isuzu / GM Calipers	**MD827****	**R4012469**
R4212276		R/H	2		Isuzu / GM Calipers	**MD827****	**R4012469**
R4212277X		L/H	2		Isuzu / GM Calipers	**MD826****	**R4012283**
R4212278X		R/H	2		Isuzu / GM Calipers	**MD826****	**R4012283**
R4212298			2	60mm	Hino Caliper / Meritor Part Number LRG714	**MDP5040**	**SJ1035**
R4212299			2	60mm	Hino Caliper / Meritor Part Number LRG715	**MDP5040**	**SJ1035**
R4212300			2	60mm	Hino Caliper / Meritor Part Number LRG716	**MDP5040**	**SJ1035**
R4212301			2	60mm	Hino Caliper / Meritor Part Number LRG717	**MDP5040**	**SJ1035**
R4212416X					Caliper Remanufactured	**MD898****	**R40H15087**
R4212417X					Caliper Remanufactured	**MD898****	**R40H15087**
R4212488X					Caliper Remanufactured	**MD784****	**R40H5931**
R4212489X					Caliper Remanufactured	**MD784****	**R40H5931**
R4212490					Bare Caliper NEW	**MD702****	**R40H5974**
R4212491					Bare Caliper NEW	**MD702****	**R40H5974**
R42R55805	R55805				Caliper Remanufactured		
R42R55853	R55853	R/H			Caliper Remanufactured	**MVD785****	**R40H5931**
R42R55854	R55854	L/H			Caliper Remanufactured	**MVD785****	**R40H5931**
R42R55855	R55855	R/H			Caliper Remanufactured	**MD784****	**R40H5931**
R42R55856	R55856	L/H			Caliper Remanufactured	**MD784****	**R40H5931**
R4255098	55098	R/H	1	3.38" (3 3/8")	Bare Caliper NEW		
R42R55098	R55098	R/H	1	3.38" (3 3/8")	Caliper Remanufactured		**R40H5519**
R42L55098		R/H	1	3.38" (3 3/8")	Loaded Caliper Remanufactured	**MD380**	**R40H5519**
R42LV55098	L55098AM	R/H	1	3.38" (3 3/8")	Loaded Caliper Remanufactured	**MVD380**	**R40H5519**
R4255099	55099	L/H	1	3.38" (3 3/8")	Bare Caliper NEW		
R42R55099	R55099	L/H	1	3.38" (3 3/8")	Caliper Remanufactured		
R42L55099		L/H	1	3.38" (3 3/8")	Loaded Caliper Remanufactured	**MD380**	**R40H5519**
R42LV55099	L55099AM	L/H	1	3.38" (3 3/8")	Loaded Caliper Remanufactured	**MVD380**	**R40H5519**
R4255717	55717	R/H & L/H Front or Rear	2	2.60"	Bare Caliper NEW 55314		
R42R55717	R55717	R/H & L/H Front or Rear	2	2.60"	Caliper Remanufactured		
R42L55717	L55314PREM	R/H & L/H Front or Rear	2	2.60"	Loaded Caliper Remanufactured	**MD380**	**R40H5522**
R42LV55717	L55314M	R/H & L/H Front or Rear	2	2.60"	Loaded Caliper Remanufactured	**MVD380**	**R40H5522**
R4255250	55250	R/H & L/H Front or Rear	2	2.88"	Bare Caliper NEW 2.88 BX 55250		

* Caliper RH / LH designations are determined by clocking mount on the axle.
** Parts not supplied with these calipers

HYDRAULIC DISC BRAKE CALIPERS

Listed By Part Number

Meritor Caliper Part No.	Replaces Bendix No.	Position	No. Of Pistons	Piston Dia.	Description	Meritor Disc Pad Set No.	Hardware Kit Number
R42R55250	R55250	R/H & L/H Front or Rear	2	2.88"	Caliper Remanufactured		
R42L55250	L55250PREM	R/H & L/H Front or Rear	2	2.88"	Loaded Caliper Remanufactured	**MD225HD**	**R40H5522**
R42LV55250	L55250LM / RM	R/H & L/H Front or Rear	2	2.88"	Loaded Caliper Remanufactured	**MVD225**	**R40H5522**
#N/A!	55252	R/H & L/H Front	2	2.5" (2 1/2")	Bare Caliper NEW		
#N/A!	R55251	R/H & L/H Front	2	2.5" (2 1/2")	Caliper Remanufactured		
#N/A!	L55251PREM	R/H & L/H Front	2	2.5" (2 1/2")	Loaded Caliper Remanufactured	**MD224**	**60050153**
#N/A!	L55251M	R/H & L/H Front	2	2.5" (2 1/2")	Loaded Caliper Remanufactured	**MVD224**	**60050153**
60050145	55252	R/H & L/H Front	2	2.88"	Bare Caliper NEW		
60040145X	R55252	R/H & L/H Front	2	2.88"	Caliper Remanufactured		
60050145XL	L55252PREM	R/H & L/H Front	2	2.88"	Loaded Caliper Remanufactured	**MD236**	**69310782**
60050145XV	L55252M	R/H & L/H Front	2	2.88"	Loaded Caliper Remanufactured	**MVD236**	**69310782**
R42R7178		L/H Front	2	73mm	Ford Cargo Front Disc 73mm	**MD379****	**R407181**
R42R7179		R/H Front	2	73mm	Ford Cargo Front Disc 73mm	**MD379****	**R407181**
R42R55454	R55454 / R55681	R/H	2	2.375"	Caliper Remanufactured		
R42L55454		R/H	2	2.375"	Loaded Caliper Remanufactured	**MD87**	**R40H5516**
R42LV55454	L55454M	R/H	2	2.375"	Loaded Caliper Remanufactured	**MVD87**	**R40H5516**
R42R55455	R55455 / R55682	L/H	2	2.375"	Caliper Remanufactured		
R42L55455	L55455M	L/H	2	2.375"	Loaded Caliper Remanufactured	**MD87**	**R40H5516**
R42LV55455		L/H	2	2.375"	Loaded Caliper Remanufactured	**MVD87**	**R40H5516**
R42R55116	R55116	R/H	1	3.094" (3 3/32")		**MD269****	**R40H5516**
R42R55117	R55117	L/H	1	3.094" (3 3/32")		**MD269****	**R40H5516**
R42R55216	R55216	R/H Front	1	2.938" (2 15/16")			
R42LV55215	L55215	R/H Front	1	2.938" (2 15/16")		**MVD52**	**R40H5500**
R42R55216	R55216	L/H Front	1	2.938" (2 15/16")			
R42LV55216	L55216	L/H Front	1	2.938" (2 15/16")		**MVD52**	**R40H5500**
R42R55094	R55094	R/H	1	73mm (2.874")		**MD50**	**R40H5511**
R42R55095	R55095	L/H	1	73mm (2.874")		**MD50**	**R40H5511**
R42R55158	R55158	R/H	1	3.094" (3 3/32")	Caliper Remanufactured		
R42L55118		R/H	1	3.094" (3 3/32")	Loaded Caliper Remanufactured	**MD269**	**R40H5516**
R42LV55118	L55158M	R/H	1	3.094" (3 3/32")	Loaded Caliper Remanufactured	**MVD269**	**R40H5516**
R42R55159	R55159	L/H	1	3.094" (3 3/32")	Caliper Remanufactured		
R42L55119		L/H	1	3.094" (3 3/32")	Loaded Caliper Remanufactured	**MD269**	**R40H5516**

* Caliper RH / LH designations are determined by clocking mount on the axle.

** Parts not supplied with these calipers

HYDRAULIC DISC BRAKE CALIPERS

Listed By Part Number

Meritor Caliper Part No.	Replaces Bendix No.	Position	No. Of Pistons	Piston Dia.	Description	Meritor Disc Pad Set No.	Hardware Kit Number
R42LV55119	L55159M	L/H	1	3.094" (3 3/32")	Loaded Caliper Remanufactured	**MVD269**	**R40H5516**
R42R55209	R55209	R/H	1	2.50" (2 1/2")		**MD154****	**R40H5536**
R42R55210	R55210	L/H	1	2.50" (2 1/2")		**MD154****	**R40H5536**
R42R55383	R55383	R/H	1	2.938" (2 15/16")	Caliper Remanufactured		
R42L55207	L55383FM	R/H	1	2.938" (2 15/16")	Loaded Caliper Remanufactured	**MD52**	**R40H5500**
R42LV55207	L55383M	R/H	1	2.938" (2 15/16")	Loaded Caliper Remanufactured	**MVD52**	**R40H5500**
R42R55384	R55384	L/H	1	2.938" (2 15/16")	Caliper Remanufactured		
R42L55208	L55384FM	L/H	1	2.938" (2 15/16")	Loaded Caliper Remanufactured	**MD52**	**R40H5500**
R42LV55208	L55384M	L/H	1	2.938" (2 15/16")	Loaded Caliper Remanufactured	**MVD52**	**R40H5500**
R42R55205	R55205	L/H	1	2.938 (2 15/16")	Caliper Remanufactured		
R42L55205	L55205FM	R/H	1	2.938 (2 15/16")	Loaded Caliper Remanufactured	**MD52**	**R40H5500**
R42LV55205	L55205M	R/H	1	2.938 (2 15/16")	Loaded Caliper Remanufactured	**MVD52**	**R40H5500**
R42R55206	R55206	L/H	1	2.938 (2 15/16")	Caliper Remanufactured		
R42L55206	L55206FM	L/H	1	2.938 (2 15/16")	Loaded Caliper Remanufactured	**MD52**	**R40H5500**
R42LV55206	L55206M	L/H	1	2.938 (2 15/16")	Loaded Caliper Remanufactured	**MVD52**	**R40H5500**
R42R55243	R55243	R/H	1	73mm (2.874")	Caliper Remanufactured		
R42L55243		R/H	1	73mm (2.874")	Loaded Caliper Remanufactured	**MD50**	**R40H5545**
R42LV55243	L55243M	R/H	1	73mm (2.874")	Loaded Caliper Remanufactured	**MVD50**	**R40H5545**
R42R55244	R55244	L/H	1	73mm (2.874")	Caliper Remanufactured		
R42L55244		L/H	1	73mm (2.874")	Loaded Caliper Remanufactured	**MD50**	**R40H5545**
R42LV55244	L55244M	L/H	1	73mm (2.874")	Loaded Caliper Remanufactured	**MVD50**	**R40H5545**
R42R55412	R55412	L/H	2	2.188" (2 3/16")	Caliper Remanufactured		
R42L55411		R/H	2	2.188" (2 3/16")	Loaded Caliper Remanufactured	**MD120**	**R40H5533**
R42LV55411	L55411M	R/H	2	2.188" (2 3/16")	Loaded Caliper Remanufactured	**MVD120**	**R40H5533**
R42R55412	R55412	L/H	2	2.188" (2 3/16")	Caliper Remanufactured		
R42L55412		L/H	2	2.188" (2 3/16")	Loaded Caliper Remanufactured	**MD120**	**R40H5533**
R42LV55412	L55412M	L/H	2	2.188" (2 3/16")	Loaded Caliper Remanufactured	**MVD120**	**R40H5533**
R42R55199	R55199	R/H	1	3.38" (3 3/8")	Caliper Remanufactured		
R42L55199	L55199FM	R/H	1	3.38" (3 3/8")	Loaded Caliper Remanufactured	**MD149**	**R40H5529**
R42LV55199	L55199M	R/H	1	3.38" (3 3/8")	Loaded Caliper Remanufactured	**MVD149**	**R40H5529**

* Caliper RH / LH designations are determined by clocking mount on the axle.
** Parts not supplied with these calipers

HYDRAULIC DISC BRAKE CALIPERS

Listed By Part Number

Meritor Caliper Part No.	Replaces Bendix No.	Position	No. Of Pistons	Piston Dia.	Description	Meritor Disc Pad Set No.	Hardware Kit Number
R42R55200	R55200	L/H	1	3.38" (3 3/8")	Caliper Remanufactured		
R42L55200	L55200FM	L/H	1	3.38" (3 3/8")	Loaded Caliper Remanufactured	**MD149**	**R40H5529**
R42LV55200	L55200M	L/H	1	3.38" (3 3/8")	Loaded Caliper Remanufactured	**MVD149**	**R40H5529**
R42R55381	R55381	R/H	1	80mm (3.150")	Caliper Remanufactured		
R42L55381	L55381FM	R/H	1	80mm (3.150")	Loaded Caliper Remanufactured	**MD392**	**R40H5500**
R42LV55381	L55381M	R/H	1	80mm (3.150")	Loaded Caliper Remanufactured	**MVD392**	**R40H5500**
R42R55382	R55382	L/H	1	80mm (3.150")	Caliper Remanufactured		**R40H5500**
R42L55382	L55382FM	L/H	1	80mm (3.150")	Loaded Caliper Remanufactured	**MD392**	**R40H5500**
R42LV55382	L55382M	L/H	1	80mm (3.150")	Loaded Caliper Remanufactured	**MVD392**	**R40H5500**
R42R55604	R55604	R/H	2	60mm (2.362")	Caliper Remanufactured		
R42L55604		R/H	2	60mm (2.362")	Loaded Caliper Remanufactured	**MD411**	**R40H5735**
R42LV55604	L55604M	R/H	2	60mm (2.362")	Loaded Caliper Remanufactured	**MVD411**	**R40H5735**
R42R55605	R55605	L/H	2	60mm (2.362")	Caliper Remanufactured		
R42L55605		L/H	2	60mm (2.362")	Loaded Caliper Remanufactured	**MD411**	**R40H5735**
R42LV55605	L55605M	L/H	2	60mm (2.362")	Loaded Caliper Remanufactured	**MVD411**	**R40H5735**
R42R55500	R55500	R/H	1	2.938 (2 15/16")	Caliper Remanufactured		
R42L55500	L55500FM	R/H	1	2.938 (2 15/16")	Loaded Caliper Remanufactured	**MD369**	**R40H5707**
R42LV55500	L55500M	R/H	1	2.938 (2 15/16")	Loaded Caliper Remanufactured	**MVD369**	**R40H5707**
R42R55501	R55501	L/H	1	2.938 (2 15/16")	Caliper Remanufactured		
R42L55501	L55501FM	L/H	1	2.938 (2 15/16")	Loaded Caliper Remanufactured	**MD369**	**R40H5707**
R42LV55501	L55501M	L/H	1	2.938 (2 15/16")	Loaded Caliper Remanufactured	**MVD369**	**R40H5707**
R42R55496	R55496	R/H	1	3.156" (3 5/32")	Caliper Remanufactured		
R42L55496	L55496FM	R/H	1	3.156" (3 5/32")	Loaded Caliper Remanufactured	**MD370**	**R40H5707**
R42LV55496	L55496M	R/H	1	3.156" (3 5/32")	Loaded Caliper Remanufactured	**MVD370**	**R40H5707**
R42R55497	R55497	L/H	1	3.156" (3 5/32")	Caliper Remanufactured		
R42L55497	L55497FM	L/H	1	3.156" (3 5/32")	Loaded Caliper Remanufactured	**MD370**	**R40H5707**
R42LV55497	L55497M	L/H	1	3.156" (3 5/32")	Loaded Caliper Remanufactured	**MVD370**	**R40H5707**
R42R55060	R55060	R/H	1	2.938 (2 15/16")	Caliper Remanufactured		
R42L55060		R/H	1	2.938 (2 15/16")	Loaded Caliper Remanufactured	**MD52**	**R40H5500**
R42LV55060	L55060	R/H	1	2.938 (2 15/16")	Loaded Caliper Remanufactured	**MVD52**	**R40H5500**

* Caliper RH / LH designations are determined by clocking mount on the axle.
** Parts not supplied with these calipers

HYDRAULIC DISC BRAKE CALIPERS

Listed By Part Number

Meritor Caliper Part No.	Replaces Bendix No.	Position	No. Of Pistons	Piston Dia.	Description	Meritor Disc Pad Set No.	Hardware Kit Number
R42R55061	R55061	L/H	1	2.938 (2 15/16")	Caliper Remanufactured		
R42L55061		L/H	1	2.938 (2 15/16")	Loaded Caliper Remanufactured	**MD52**	**R40H5500**
R42LV55061	L55061	L/H	1	2.938 (2 15/16")	Loaded Caliper Remanufactured	**MVD52**	**R40H5500**
R42R55677	R55677		2	2.188" (2 3/16")		**MD120****	
R42R55413	R55413		2	2.188" (2 3/16")		**MD120****	
R42R55460	R55460	R/H	2	2.188" (2 3/16")	Caliper Remanufactured		
R42L55460	L55460FM	R/H	2	2.188" (2 3/16")	Loaded Caliper Remanufactured	**MD450**	**R40H5533**
R42LV55460	L55460M	R/H	2	2.188" (2 3/16")	Loaded Caliper Remanufactured	**MVD450**	**R40H5533**
R42R55461	R55461	L/H	2	2.188" (2 3/16")	Caliper Remanufactured		
R42L55461	L55461FM	L/H	2	2.188" (2 3/16")	Loaded Caliper Remanufactured	**MD450**	**R40H5533**
R42LV55461	L55461M	L/H	2	2.188" (2 3/16")	Loaded Caliper Remanufactured	**MVD450**	**R40H5533**
R42R55636	R55636	R/H	2	56mm (2.205")	Caliper Remanufactured		
R42L55636	L55636FM	R/H	2	56mm (2.205")	Loaded Caliper Remanufactured	**MD557**	**R40H5815**
R42LV55636	L55636M	R/H	2	56mm (2.205")	Loaded Caliper Remanufactured	**MVD557**	**R40H5815**
R42R55637	R55637	L/H	2	56mm (2.205")	Caliper Remanufactured		
R42L55637	L55637FM	L/H	2	56mm (2.205")	Loaded Caliper Remanufactured	**MD557**	**R40H5815**
R42LV55637	L55637M	L/H	2	56mm (2.205")	Loaded Caliper Remanufactured	**MVD557**	**R40H5815**
R42R55245	R55245	R/H & L/H Front or Rear	2	2.60"	Caliper Remanufactured		
R42L55245			2	2.60"	Loaded Caliper Remanufactured	**MD380**	**R40H5522**
R42LV55245			2	2.60"	Loaded Caliper Remanufactured	**MVD380**	**R40H5522**
R42R55460P	R55460P	R/H	2	2.188" (2 3/16")	Caliper Remanufactured		
R42L55460P	L55460PFM	R/H	2	2.188" (2 3/16")	Loaded Caliper Remanufactured	**MD450**	**R40H5815**
R42LV55460P	L55460PM	R/H	2	2.188" (2 3/16")	Loaded Caliper Remanufactured	**MVD450**	**R40H5815**
R42R55461P	R55461P	L/H	2	2.188" (2 3/16")	Caliper Remanufactured		
R42L55461P	L55461PFM	L/H	2	2.188" (2 3/16")	Loaded Caliper Remanufactured	**MD450**	**R40H5815**
R42LV55461P	L55461PM	L/H	2	2.188" (2 3/16")	Loaded Caliper Remanufactured	**MVD450**	**R40H5815**
		R/H & L/H Front or Rear	2	2.88			

* Caliper RH / LH designations are determined by clocking mount on the axle.
** Parts not supplied with these calipers

HYDRAULIC DISC BRAKE CALIPERS

Listed By Core Number

Meritor Caliper Part No.	Description	Core Part No.
R4255098	Bare Caliper NEW	
R42R55098	Caliper Remanufactured	XC2001
R42L55098	Loaded Caliper Remanufactured	XC2001
R42LV55098	Loaded Caliper Remanufactured	XC2001
R4255099	Bare Caliper NEW	
R42R55099	Caliper Remanufactured	XC2002
R42L55099	Loaded Caliper Remanufactured	XC2002
R42LV55099	Loaded Caliper Remanufactured	XC2002
R4255717	Bare Caliper NEW 55314	
R42R55717	Caliper Remanufactured	XC2101
R42L55717	Loaded Caliper Remanufactured	XC2101
R42LV55717	Loaded Caliper Remanufactured	XC2101
R4255250	Bare Caliper NEW 2.88 BX 55250	
R42R55250	Caliper Remanufactured	XC2004
R42L55250	Loaded Caliper Remanufactured	XC2004
R42LV55250	Loaded Caliper Remanufactured	XC2004
60050145	Bare Caliper NEW	
60040145X	Caliper Remanufactured	XC2006
60050145XL	Loaded Caliper Remanufactured	XC2006
60050145XV	Loaded Caliper Remanufactured	XC2006
R42R55454	Caliper Remanufactured	XC2017
R42L55454	Loaded Caliper Remanufactured	XC2017
R42LV55454	Loaded Caliper Remanufactured	XC2017
R42R55455	Caliper Remanufactured	XC2018
R42L55455	Loaded Caliper Remanufactured	XC2018
R42LV55455	Loaded Caliper Remanufactured	XC2018
R42R55116	Caliper Remanufactured	XC2019
R42R55117	Caliper Remanufactured	XC2020
R42R55216	Caliper Remanufactured	XC2021
R42LV55215	Loaded Caliper Remanufactured	XC2021
R42R55216	Caliper Remanufactured	XC2022
R42LV55216	Loaded Caliper Remanufactured	XC2022
R42R55094	Caliper Remanufactured	XC2023
R42R55095	Caliper Remanufactured	XC2024
R42R55158	Caliper Remanufactured	XC2025
R42L55118	Loaded Caliper Remanufactured	XC2025
R42LV55118	Loaded Caliper Remanufactured	XC2025
R42R55159	Caliper Remanufactured	XC2026
R42L55119	Loaded Caliper Remanufactured	XC2026
R42LV55119	Loaded Caliper Remanufactured	XC2026
R42R55209	Caliper Remanufactured	XC2029
R42R55210	Caliper Remanufactured	XC2030
R42R55383	Caliper Remanufactured	XC2031
R42L55207	Loaded Caliper Remanufactured	XC2031

Meritor Caliper Part No.	Description	Core Part No.
R42LV55207	Loaded Caliper Remanufactured	XC2031
R42R55384	Caliper Remanufactured	XC2032
R42L55208	Loaded Caliper Remanufactured	XC2032
R42LV55208	Loaded Caliper Remanufactured	XC2032
R42R55205	Caliper Remanufactured	XC2033
R42L55205	Loaded Caliper Remanufactured	XC2033
R42LV55205	Loaded Caliper Remanufactured	XC2033
R42R55206	Caliper Remanufactured	XC2034
R42L55206	Loaded Caliper Remanufactured	XC2034
R42LV55206	Loaded Caliper Remanufactured	XC2034
R42R55243	Caliper Remanufactured	XM2037
R42L55243	Loaded Caliper Remanufactured	XM2037
R42LV55243	Loaded Caliper Remanufactured	XM2037
R42R55244	Caliper Remanufactured	XM2038
R42L55244	Loaded Caliper Remanufactured	XM2038
R42LV55244	Loaded Caliper Remanufactured	XM2038
R42R55412	Caliper Remanufactured	XC2041
R42L55411	Loaded Caliper Remanufactured	XC2041
R42LV55411	Loaded Caliper Remanufactured	XC2041
R42R55412	Caliper Remanufactured	XC2042
R42L55412	Loaded Caliper Remanufactured	XC2042
R42LV55412	Loaded Caliper Remanufactured	XC2042
R42R55199	Caliper Remanufactured	XC2043
R42L55199	Loaded Caliper Remanufactured	XC2043
R42LV55199	Loaded Caliper Remanufactured	XC2043
R42R55200	Caliper Remanufactured	XC2044
R42L55200	Loaded Caliper Remanufactured	XC2044
R42LV55200	Loaded Caliper Remanufactured	XC2044
R42R55381	Caliper Remanufactured	XC2045
R42L55381	Loaded Caliper Remanufactured	XC2045
R42LV55381	Loaded Caliper Remanufactured	XC2045
R42R55382	Caliper Remanufactured	XC2046
R42L55382	Loaded Caliper Remanufactured	XC2046
R42LV55382	Loaded Caliper Remanufactured	XC2046
R42R55604	Caliper Remanufactured	XC2055
R42L55604	Loaded Caliper Remanufactured	XC2055
R42LV55604	Loaded Caliper Remanufactured	XC2055
R42R55605	Caliper Remanufactured	XC2056
R42L55605	Loaded Caliper Remanufactured	XC2056
R42LV55605	Loaded Caliper Remanufactured	XC2056
R42R55500	Caliper Remanufactured	XC2059
R42L55500	Loaded Caliper Remanufactured	XC2059
R42LV55500	Loaded Caliper Remanufactured	XC2059
R42R55501	Caliper Remanufactured	XC2060

* Caliper RH / LH designations are determined by clocking mount on the axle.

** Parts not supplied with these calipers

HYDRAULIC DISC BRAKE CALIPERS

Listed By Core Number

Meritor Caliper Part No.	Description	Core Part No.
R42L55501	Loaded Caliper Remanufactured	XC2060
R42LV55501	Loaded Caliper Remanufactured	XC2060
R42R55496	Caliper Remanufactured	XC2067
R42L55496	Loaded Caliper Remanufactured	XC2067
R42LV55496	Loaded Caliper Remanufactured	XC2067
R42R55497	Caliper Remanufactured	XC2068
R42L55497	Loaded Caliper Remanufactured	XC2068
R42LV55497	Loaded Caliper Remanufactured	XC2068
R42R55060	Caliper Remanufactured	XC2073
R42L55060	Loaded Caliper Remanufactured	XC2073
R42LV55060	Loaded Caliper Remanufactured	XC2073
R42R55061	Caliper Remanufactured	XC2074
R42L55061	Loaded Caliper Remanufactured	XC2074
R42LV55061	Loaded Caliper Remanufactured	XC2074
R42R55677	Caliper Remanufactured	XM2075
R42R55413	Caliper Remanufactured	XM2077
R42R55460	Caliper Remanufactured	XC2079
R42L55460	Loaded Caliper Remanufactured	XC2079
R42LV55460	Loaded Caliper Remanufactured	XC2079
R42R55461	Caliper Remanufactured	XC2080
R42L55461	Loaded Caliper Remanufactured	XC2080
R42LV55461	Loaded Caliper Remanufactured	XC2080
R42R55636	Caliper Remanufactured	XC2081
R42L55636	Loaded Caliper Remanufactured	XC2081
R42LV55636	Loaded Caliper Remanufactured	XC2081
R42R55637	Caliper Remanufactured	XC2082
R42L55637	Loaded Caliper Remanufactured	XC2082
R42LV55637	Loaded Caliper Remanufactured	XC2082
R42R55245	Caliper Remanufactured	XC2083
R42L55245	Loaded Caliper Remanufactured	XC2083
R42LV55245	Loaded Caliper Remanufactured	XC2083
R42R55460P	Caliper Remanufactured	XC2086
R42L55460P	Loaded Caliper Remanufactured	XC2086
R42LV55460P	Loaded Caliper Remanufactured	XC2086
R42R55461P	Caliper Remanufactured	XC2087
R42L55461P	Loaded Caliper Remanufactured	XC2087
R42LV55461P	Loaded Caliper Remanufactured	XC2087
R4255656	Bare Caliper New	
R42R55656	Caliper Remanufactured	XC2103
R42L55656	Loaded Caliper 2.88bx W/Air supsension	XC2103
R42LV55656	Loaded Caliper 2.88bx W/Air supsension	XC2103
60050150	Bare Caliper New	

Meritor Caliper Part No.	Description	Core Part No.
60050150X	Caliper Remanufactured	XC2104
60050150XL	Loaded Caliper	XC2104
60050150XV	Loaded Caliper	XC2104
R4255313	Bare Caliper New	
R42R55313	Caliper Remanufactured	XC2102
R42L55313	Loaded Caliper	XC2102
R42LV55313X	Loaded Caliper	XC2102
60050312	Loaded Caliper New Quadraulic 70mm SP	XC2407
60050312XL	Loaded Caliper Remanufactured Quadraulic 70mm SP	XC2407
60050313	Loaded Caliper New Quadraulic 70mm SP	XC2406
60050313XL	Loaded Caliper Remanufactured Quadraulic 70mm SP	XC2406
R42R55687	Caliper 96-00 C3500 LD	XC2112
R42L55687	Loaded Caliper Remanufactured	XC2112
R42LV55687	Loaded Caliper Remanufactured	XC2112
R42R55688	Caliper 96-00 C3500 LD	XC2113
R42L55688	Loaded Caliper Remanufactured	XC2113
R42LV55688	Loaded Caliper Remanufactured	XC2113
R42R55748	Caliper Remanufactured	XC2118
R42L55748	Loaded Caliper Remanufactured	XC2118
R42LV55748	Loaded Caliper Remanufactured	XC2118
R42R55749	Caliper Remanufactured	XC2119
R42L55749	Loaded Caliper Remanufactured	XC2119
R42LV55749	Loaded Caliper Remanufactured	XC2119
60450454	Loaded Caliper New Quadraulic 70mm SP	XC2405
60050320X	Caliper Remanufactured Quadraulic 70mm SP	XC2405
60050320XL	Loaded Caliper Remanufactured Quadraulic 70mm SP	XC2405
60050320XV	Loaded Caliper Remanufactured Quadraulic 70mm SP	XC2405
60450455	Loaded Caliper New Quadraulic 70mm SP	XC2404
60050321X	Caliper Remanufactured Quadraulic 70mm SP	XC2404
60050321XL	Loaded Caliper Remanufactured Quadraulic 70mm SP	XC2404
60050321XV	Loaded Caliper Remanufactured Quadraulic 70mm SP	XC2404
60450482004	Loaded Caliper New Quadraulic 70mm PP	XC2403
60450482X	Caliper Remanufactured Quadraulic 70mm PP	XC2403

* Caliper RH / LH designations are determined by clocking mount on the axle.
** Parts not supplied with these calipers

HYDRAULIC DISC BRAKE CALIPERS

Listed By Core Number

Meritor Caliper Part No.	Description	Core Part No.
60450482XL	Loaded Caliper Remanufactured Quadraulic 70mm PP	XC2403
Meritor Caliper Part No.	**Description**	**Core Part No.**
60450482XV	Loaded Caliper Remanufactured Quadraulic 70mm PP	XC2403
60450483004	Loaded Caliper New Quadraulic 70mm PP	XC2402
60450483X	Caliper Remanufactured Quadraulic 70mm PP	XC2402
60450483XL	Loaded Caliper Remanufactured Quadraulic 70mm PP	XC2402
60450483XV	Loaded Caliper Remanufactured Quadraulic 70mm PP	XC2402
60450480004	Loaded Caliper New Quadraulic 64mm PP	XC2401
60450480X	Caliper Remanufactured Quadraulic 64mm PP	XC2401
60450480XL	Loaded Caliper Remanufactured Quadraulic 64mm PP	XC2401
60450480XV	Loaded Caliper Remanufactured Quadraulic 64mm PP	XC2401
60450481004	Loaded Caliper New Quadraulic 64mm PP	XC2400
60450481X	Caliper Remanufactured Quadraulic 64mm PP	XC2400
60450481XL	Loaded Caliper Remanufactured Quadraulic 64mm PP	XC2400
60450481XV	Loaded Caliper Remanufactured Quadraulic 64mm PP	XC2400
R4255849	Bare Caliper New 66mm Bosch	
R424153263	Loaded Caliper New 66mm Bosch	
R42R55849	Caliper Remanufactured 66mm Bosch	XC2468
R42L55849	Loaded Caliper Remanufactured 66mm Bosch	XC2468
R42LV55849	Loaded Caliper Remanufactured 66mm Bosch	XC2468
R4255850	Bare Caliper New 73mm Bosch	
R424153216	Loaded Caliper New 73mm Bosch	
R42R55850	Caliper Remanufactured 73mm Bosch	XC2469
R42L55850	Loaded Caliper Remanufactured 73mm Bosch	XC2469
R42LV55850	Loaded Caliper Remanufactured 73mm Bosch	XC2469
R4255861	Bare Caliper New F450	
R42R55861	Caliper RemanuFactured F450	XC2428
R42L55861	Loaded Caliper RemanuFactured F450	XC2428

Meritor Caliper Part No.	Description	Core Part No.
R42LV55861	Loaded Caliper RemanuFactured F450	XC2428
R4255862	Bare Caliper New F450	
R42R55862	Caliper RemanuFactured F450	XC2429
Meritor Caliper Part No.	**Description**	**Core Part No.**
R42L55862	Loaded Caliper RemanuFactured F450	XC2429
R42LV55862	Loaded Caliper RemanuFactured F450	XC2429
R4255857	Bare Caliper New	
R42R55857	Caliper Remanufactured	XC2452
R42L55857	Loaded Caliper Remanufactured	XC2452
R42LV55857	Loaded Caliper Remanufactured	XC2452
R4255858	Bare Caliper New	
R42R55858	Caliper Remanufactured	XC2453
R42L55858	Loaded Caliper Remanufactured	XC2453
R42LV55858	Loaded Caliper Remanufactured	XC2453
R4255915	Bare Caliper New	
R42R55915	Caliper Remanufactured	XC2430
R4255916	Bare Caliper New	
R42R55916	Caliper Remanufactured	XC2431
R4255887	Bare Caliper New	
R42R55887	Caliper Remanufactured	XC2432
R42L55887	Loaded Caliper Remanufactured	XC2432
R42LV55887	Loaded Caliper Remanufactured	XC2432
R4255888	Bare Caliper New	
R42R55888	Caliper Remanufactured	XC2433
R42L55888	Loaded Caliper Remanufactured	XC2433
R42LV55888	Loaded Caliper Remanufactured	XC2433
R4255889	Bare Caliper New	
R42R55889	Caliper Remanufactured	XC2434
R42L55889	Loaded Caliper Remanufactured	XC2434
R42LV55889	Loaded Caliper Remanufactured	XC2434
R4255890	Bare Caliper New	
R42R55890	Caliper Remanufactured	XC2435
R42L55890	Loaded Caliper Remanufactured	XC2435
R42LV55890	Loaded Caliper Remanufactured	XC2435
R4212067	Bare Caliper New	
R42R12067	Bare Caliper Remanufactured	XC2462
R42L12067	Loaded Caliper Remanufactured	XC2462
R42LV12067	Loaded Caliper Remanufactured	XC2462
R4212068	Bare Caliper New	
R42R12068	Bare Caliper Remanufactured	XC2463
R42L12068	Loaded Caliper Remanufactured	XC2463

* Caliper RH / LH designations are determined by clocking mount on the axle.
** Parts not supplied with these calipers

HYDRAULIC DISC BRAKE CALIPERS

Listed By Part Number

Meritor Caliper Part No.	Description	Core Part No.
R42LV12068	Loaded Caliper Remanufactured	XC2463
R4212069	Bare Caliper New	
R42R12069	Bare Caliper Remanufactured	XC2464
R42L12069	Loaded Caliper Remanufactured	XC2464
R42LV12069	Loaded Caliper Remanufactured	XC2464
Meritor Caliper Part No.	**Description**	**Core Part No.**
R4255604	Bare Caliper New / for reman use e-9181x	
R4255605	Bare Caliper New / for reman use e-9182x	
R4212077	Bare Caliper New	
R42R12077	Caliper Remanufactured	XC2456
R42L12077	Loaded Caliper Remanufactured	XC2456
R42LV12077	Loaded Caliper Remanufactured	XC2456
R4212078	Bare Caliper New	
R42R12078	Caliper Remanufactured	XC2457
R42L12078	Loaded Caliper Remanufactured	XC2457
R42LV12078	Loaded Caliper Remanufactured	XC2457
R4212083	Bare Caliper New	
R42R12083	Caliper Remanufactured	XC2414
R4212084	Bare Caliper New	
R42R12084	Caliper Remanufactured	XC2415
60050295	Bare Caliper New 2.18 piston	
R4255865	Bare Caliper New	
R42R55865	Caliper Remanufactured	XC2436
R42L55865	Loaded Caliper Remanufactured	XC2436
R42LV55865	Loaded Caliper Remanufactured	XC2436
R4255866	Bare Caliper New	
R42R55866	Caliper Remanufactured	XC2437
R42L55866	Loaded Caliper Remanufactured	XC2437
R42LV55866	Loaded Caliper Remanufactured	XC2437
	Bare Caliper New	
	Bare Caliper New	
	Bare Caliper New	
	Bare Caliper New	
R4212095	Bare Caliper New	
R4212096	Bare Caliper New	
R4255989	Bare Caliper New	
R4255988	Bare Caliper New	
R4256546	Sprinter Caliper	
R42LV56547	Sprinter Caliper	XC2446
R4256547	Sprinter Caliper	
R42LV56547	Sprinter Caliper	XC2447

Meritor Caliper Part No.	Description	Core Part No.
R4256544	Sprinter Caliper	
R42LV56544	Sprinter Caliper	XC2458
R4256545	Sprinter Caliper	
R42LV56545	Sprinter Caliper	XC2458
R4255972	Bare Caliper NEW	
R42R55972	Caliper Remanufactured	XC2448
R42L55972	Loaded Caliper Remanufactured	XC2448
R42LV55972	Loaded Caliper Remanufactured	XC2448
Meritor Caliper Part No.	**Description**	**Core Part No.**
R4255973	Bare Caliper NEW	
R42R55973	Caliper Remanufactured	XC2449
R42L55973	Loaded Caliper Remanufactured	XC2449
R42LV55973	Loaded Caliper Remanufactured	XC2449
R4255966	Bare Caliper NEW	
R42R55966	Caliper Remanufactured	XC2450
R42L55966	Loaded Caliper Remanufactured	XC2450
R42LV55966	Loaded Caliper Remanufactured	XC2450
R4255967	Bare Caliper NEW	
R42R55967	Caliper Remanufactured	XC2451
R42L55967	Loaded Caliper Remanufactured	XC2451
R42LV55967	Loaded Caliper Remanufactured	XC2451
R4212243	Bare Caliper NEW	
R42R12243	Caliper Remanufactured	XC2416
R42L12243	Loaded Caliper Remanufactured	XC2416
R42LV12243	Loaded Caliper Remanufactured	XC2416
R4212244	Bare Caliper NEW	
R42R12244	Caliper Remanufactured	XC2417
R42L12244	Loaded Caliper Remanufactured	XC2417
R42LV12244	Loaded Caliper Remanufactured	XC2417
R4212248	Bare Caliper NEW	
R42R12248	Caliper Remanufactured	XC2418
R42L12248	Loaded Caliper Remanufactured	XC2418
R42LV12248	Loaded Caliper Remanufactured	XC2418
R4212249	Bare Caliper NEW	
R42R12249	Caliper Remanufactured	XC2419
R42L12249	Loaded Caliper Remanufactured	XC2419
R42LV12249	Loaded Caliper Remanufactured	XC2419
R4212253	Bare Caliper NEW	
R42R12253	Caliper Remanufactured	XC2420
R42L12253	Loaded Caliper Remanufactured	XC2420
R42LV12253	Loaded Caliper Remanufactured	XC2420
R4212254	Bare Caliper NEW	

* Caliper RH / LH designations are determined by clocking mount on the axle.
** Parts not supplied with these calipers

HYDRAULIC DISC BRAKE CALIPERS

Listed By Part Number

Meritor Caliper Part No.	Description	Core Part No.
R42R12254	Caliper Remanufactured	XC2421
R42L12254	Loaded Caliper Remanufactured	XC2421
R42LV12254	Loaded Caliper Remanufactured	XC2421
R4255748	Bare Caliper NEW	
R42R55748	Caliper Remanufactured	XC2460
R42L55748	Loaded Caliper Remanufactured	XC2460
R42LV55748	Loaded Caliper Remanufactured	XC2460
R4255749	Bare Caliper NEW	
R42R55749	Caliper Remanufactured	XC2461
R42L55749	Loaded Caliper Remanufactured	XC2461
R42LV55749	Loaded Caliper Remanufactured	XC2461
Meritor Caliper Part No.	**Description**	**Core Part No.**
R4255794	Bare Caliper NEW	
R42R55794	Caliper Remanufactured	XC2465
R42L55794	Loaded Caliper Remanufactured	XC2465
R42LV55794	Loaded Caliper Remanufactured	XC2465
R4255795	Bare Caliper NEW	
R42R55795	Bare Caliper Remanufactured	XC2466
R42L55795	Loaded Caliper Remanufactured	XC2466
R42LV55795	Loaded Caliper Remanufactured	XC2466
R4212269	Isuzu / GM Calipers	XC2422
R4212270	Isuzu / GM Calipers	XC2423
R4212271X	Isuzu / GM Calipers	XC2122
R4212272X	Isuzu / GM Calipers	XC2123
R4212273	Isuzu / GM Calipers	XC2424
R4212274	Isuzu / GM Calipers	XC2425
R4212275	Isuzu / GM Calipers	XC2426
R4212276	Isuzu / GM Calipers	XC2427
R4212277X	Isuzu / GM Calipers	XC2124
R4212278X	Isuzu / GM Calipers	XC2125
R4212298	Hino Caliper / Meritor Part Number LRG714	
R4212299	Hino Caliper / Meritor Part Number LRG715	
R4212300	Hino Caliper / Meritor Part Number LRG716	
R4212301	Hino Caliper / Meritor Part Number LRG717	
R4212416X	Caliper Remanufactured	XC2471
R4212417X	Caliper Remanufactured	XC2472
R42R1012433	Caliper Remanufactured	XC
R42R1012434	Caliper Remanufactured	XC
R42R1012435	Caliper Remanufactured	XC
R42R1012436	Caliper Remanufactured	XC

Meritor Caliper Part No.	Description	Core Part No.
R42R1012439	Caliper Remanufactured	XC
R42R1012440	Caliper Remanufactured	XC
R42R1012441	Caliper Remanufactured	XC
R42R1012442	Caliper Remanufactured	XC
R42R1012455	Caliper Remanufactured	XC
R42R1012456	Caliper Remanufactured	XC
R42R1012457	Caliper Remanufactured	XC
R42R1012458	Caliper Remanufactured	XC
R42R1012459	Caliper Remanufactured	XC
R42R1012460	Caliper Remanufactured	XC
R4212488X	Caliper Remanufactured	XC2473
R4212489X	Caliper Remanufactured	XC2474
R4212490	Bare Caliper NEW	
R4212491	Bare Caliper NEW	
Meritor Caliper Part No.	**Description**	**Core Part No.**
R42R55805	Caliper Remanufactured	XC2477
R42R55853	Caliper Remanufactured	XC2478
R42R55854	Caliper Remanufactured	XC2479
R42R55855	Caliper Remanufactured	XC2480
R42R55856	Caliper Remanufactured	XC2481
R42R1012655		XC
R42R1012656		XC
R42R1012698		XC
R42R1012699		XC

* Caliper RH / LH designations are determined by clocking mount on the axle.
** Parts not supplied with these calipers

MERITOR®
an ***ArvinMeritor*** brand

Service Parts Instructions

Installing Caliper Bumper Gap Shims on All-Makes Hydraulic Disc Brakes

Kit R40H8203

Hazard Alert Messages

Read and observe all Warning and Caution hazard alert messages in this publication. They provide information that can help prevent serious personal injury, damage to components, or both.

⚠ WARNING

To prevent serious eye injury, always wear safe eye protection when you perform vehicle maintenance or service.

Park the vehicle on a level surface. Block the wheels to prevent the vehicle from moving. Support the vehicle with safety stands. Do not work under a vehicle supported only by jacks. Jacks can slip and fall over. Serious personal injury and damage to components can result.

⚠ ASBESTOS AND NON-ASBESTOS FIBERS WARNING

Some brake linings contain asbestos fibers, a cancer and lung disease hazard. Some brake linings contain non-asbestos fibers, whose long-term effects to health are unknown. You must use caution when you handle both asbestos and non-asbestos materials.

How to Obtain Kits

Call ArvinMeritor's Commercial Vehicle Aftermarket at 888-725-9355.

Kit R40H8203

Part	Quantity
Shims — 0.025″ (0.635 mm) Thick	2
Shims — 0.045″ (1.143 mm) Thick	2
Support Keys	2
Support Springs	2

Determine if Shims are Required

1. Wear safe eye protection.
2. Park the vehicle on a level surface. Block the wheels to prevent the vehicle from moving.
3. Remove the caliper assembly from the anchor plate. Remove the key retention bolt. Then tap out the key and spring.
4. Use a wire brush to clean the v-way surfaces of the caliper and anchor plate. File any deep nicks or gouges smooth.
5. Lay a straightedge across the caliper v-way surfaces. Use a feeler gauge to measure the gap.
   - **If the gap depth is 0.050-inch (1.27 mm) or more:** Replace the caliper. Figure 1.

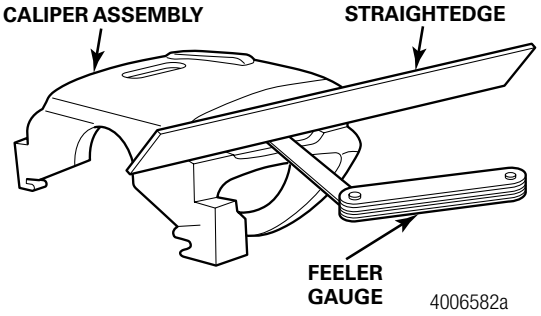

Figure 1

6. Install the caliper back into the anchor plate. Install a new production key and bolt, but do not install the support spring at this time.
7. Insert a screwdriver into the center of the key-to-bumper gap. Pry firmly to ensure the caliper is seated against the three slide surfaces "A", "B" and "D". Figure 2.

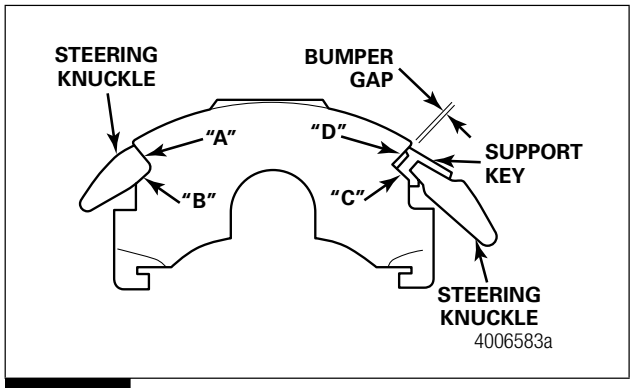

Figure 2

8. Measure the bumper gap. Use the largest feeler gauge or stack of gauges that will fit into the gap on either side of the screwdriver. Figure 2.
9. Use the bumper gap measurement to select a shim according to the table.
   - **If the bumper gap exceeds 0.145-inch (3.683 mm):** Replace the old caliper with a new caliper and remeasure the bumper gap.
   - **If the bumper gap with the new caliper is between 0.058-inch (1.473 mm) and 0.145-inch (3.683 mm):** Select a shim from the table.
   - **If the bumper gap with the new caliper exceeds 0.145-inch (3.683 mm):** Replace the anchor plate also. Use a new key and spring when assembling the new components.

Gap Size	Shim Thickness
0-0.058″ (0-1.473 mm)	None required
0.058-0.101″ (1.473-2.565 mm)	0.025″ (0.635 mm)
0.101-0.145″ (2.565-3.683 mm)	0.045″ (1.143 mm)
0.145″ (3.683 mm)	Refer to Step 9.

Install the Shim

1. Remove the caliper assembly from the anchor plate. Install the selected shim on the anchor plate v-way opposite the key and spring v-way. Figure 3.

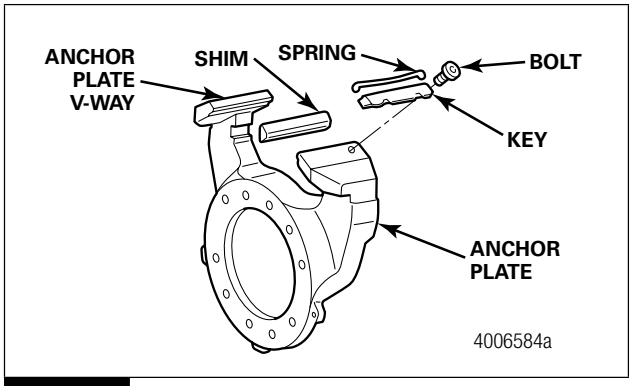

Figure 3

2. With the shim in place on the anchor plate v-way, reinstall the caliper assembly with a new key and spring.
3. Measure the bumper gap as described in Steps 7 and 8. If the gap exceeds 0.058-inch (1.473 mm), install a thicker shim or replace components as described in Step 9.

ArvinMeritor™

Meritor Heavy Vehicle Systems, LLC
7975 Dixie Highway
Florence, KY 41042 USA
888-725-9355
arvinmeritor.com

Information contained in this publication was in effect at the time the publication was approved for printing and is subject to change without notice or liability. Meritor Heavy Vehicle Systems, LLC, reserves the right to revise the information presented or to discontinue the production of parts described at any time.

Copyright 2008
ArvinMeritor, Inc.
All Rights Reserved

Printed in USA

TP-0857
Issued 02-08
(16579/22882)

MERITOR®
an ArvinMeritor brand

Service Parts Instructions

Installing Caliper Bumper Gap Shims on All-Makes Hydraulic Disc Brakes

Kit R40H5664

Hazard Alert Messages

Read and observe all Warning and Caution hazard alert messages in this publication. They provide information that can help prevent serious personal injury, damage to components, or both.

⚠ WARNING

To prevent serious eye injury, always wear safe eye protection when you perform vehicle maintenance or service.

Park the vehicle on a level surface. Block the wheels to prevent the vehicle from moving. Support the vehicle with safety stands. Do not work under a vehicle supported only by jacks. Jacks can slip and fall over. Serious personal injury and damage to components can result.

⚠ ASBESTOS AND NON-ASBESTOS FIBERS WARNING

Some brake linings contain asbestos fibers, a cancer and lung disease hazard. Some brake linings contain non-asbestos fibers, whose long-term effects to health are unknown. You must use caution when you handle both asbestos and non-asbestos materials.

How to Obtain Kits

Call ArvinMeritor's Commercial Vehicle Aftermarket at 888-725-9355.

Kit R40H5664

Part	Quantity
Shims for 0.036-0.055″ (0.914-1.397 mm) Gap — 682	2
Shims for 0.056-0.075″ (1.422-1.905 mm) Gap — 683	2
Shims for 0.076-0.095″ (1.93-2.413 mm) Gap — 684	2
Shims for 0.096-0.115″ (2.438-2.921 mm) Gap — 685	2

Determine if Shims are Required

1. Wear safe eye protection.
2. Park the vehicle on a level surface. Block the wheels to prevent the vehicle from moving.
3. Remove the spring, retainer and bolt from the caliper. Figure 1.

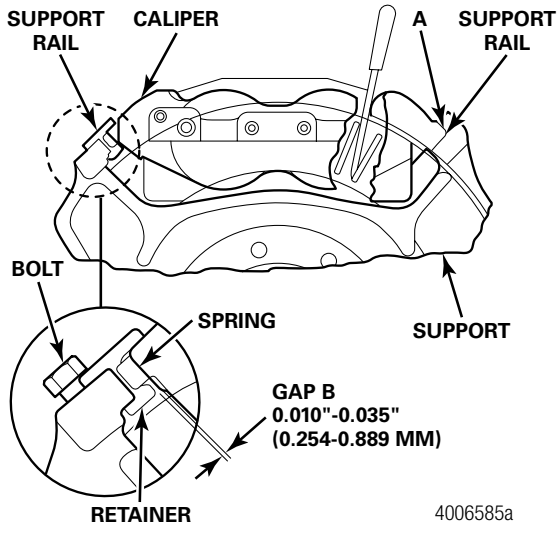

Figure 1

⚠ CAUTION

Set the caliper on the suspension or support it with a length of strong wire. Do not let the caliper hang from the hydraulic hose. Damage to components can result.

4. Lift the caliper up and off the support. Set the caliper on the suspension or support it with a length of strong wire. Do not let the caliper hang from the hydraulic hose.
5. Use a wire brush to clean the support rails and rail surfaces on the caliper.
6. Reinstall the caliper on the support.
7. Reinstall the spring and retainer.
8. With the caliper assembled on the support, place a screwdriver or other suitable tool between the rotor vanes. Rotate the wheel by hand FORWARD to position the forward support rail in full contact with the caliper support rail surfaces.
9. Use a feeler gauge to measure the gap.
   - **If the measurement is 0.010-0.035-inch (0.254-0.889 mm):** The gap is within specifications and no shims are required.
   - **If the measurement is greater than 0.035-inch (0.889 mm):** Select an appropriate size shim from the following table to achieve a gap within specifications. Do not use a shim thickness that will result in a gap that is less than 0.010-inch (0.254 mm).
   - **If the gap is greater than 0.115-inch (2.921 mm):** Replace the support.

Gap "B" Measurement	Shim ID
0.036-0.055″ (0.914-1.397 mm)	682*
0.056-0.075″ (1.422-1.905 mm)	683
0.076-0.095″ (1.93-2.413 mm)	684
0.096-0.115″ (2.438-2.921 mm)	685

*Number 682 is the thinnest shim and will not have the part number stamped on its surface.

Install the Shim

1. Remove the spring, retainer and bolt.
2. Lift the forward end of the caliper enough to provide clearance between the caliper and the support rail to allow installation of the shim. The widest side of the shim is to fit up against the widest surface of the support rail. Figure 2.

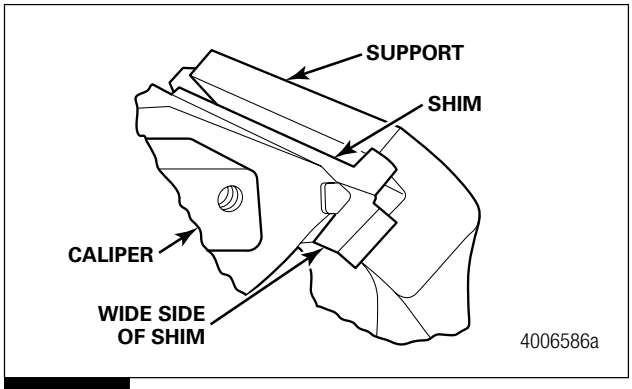

Figure 2

3. Use disc brake grease recommended by Meritor to lubricate the support rail surface on the caliper that will contact the shim.
4. With the shim installed, return the caliper to its original position on the support. Install the new spring and new retainer provided in Kit R40H5664. Install a new bolt.
5. Measure the gap to ensure it is within 0.010-0.035-inch (0.254-0.889 mm). If the gap is not within specifications, repeat the steps for installing shims with the next thicker shim.

ArvinMeritor™

Meritor Heavy Vehicle Systems, LLC
7975 Dixie Highway
Florence, KY 41042 USA
888-725-9355
arvinmeritor.com

Information contained in this publication was in effect at the time the publication was approved for printing and is subject to change without notice or liability. Meritor Heavy Vehicle Systems, LLC, reserves the right to revise the information presented or to discontinue the production of parts described at any time.

Copyright 2008
ArvinMeritor, Inc.
All Rights Reserved

Printed in USA

TP-0858
Issued 02-08
(16579/22882)

MERITOR®
an ***ArvinMeritor*** brand

Service Parts Instructions

Installing Caliper Bumper Gap Shims on All-Makes Hydraulic Disc Brakes

Kit R404151706

Hazard Alert Messages

Read and observe all Warning and Caution hazard alert messages in this publication. They provide information that can help prevent serious personal injury, damage to components, or both.

⚠ WARNING

To prevent serious eye injury, always wear safe eye protection when you perform vehicle maintenance or service.

Park the vehicle on a level surface. Block the wheels to prevent the vehicle from moving. Support the vehicle with safety stands. Do not work under a vehicle supported only by jacks. Jacks can slip and fall over. Serious personal injury and damage to components can result.

⚠ ASBESTOS AND NON-ASBESTOS FIBERS WARNING

Some brake linings contain asbestos fibers, a cancer and lung disease hazard. Some brake linings contain non-asbestos fibers, whose long-term effects to health are unknown. You must use caution when you handle both asbestos and non-asbestos materials.

How to Obtain Kits

Call ArvinMeritor's Commercial Vehicle Aftermarket at 888-725-9355.

Kit R404151706

Part	Quantity
Shims for 0.036-0.059″ (0.914-1.5 mm) Gap — 690	2
Shims for 0.060-0.074″ (1.524-1.879 mm) Gap — 691	2
Shims for 0.075-0.089″ (1.905-2.26 mm) Gap — 692	2
Shims for 0.090-0.114″ (2.286-2.895 mm) Gap — 693	2
Shims for 0.115-0.130″ (2.921-3.302 mm) Gap — 694	2

Determine if Shims are Required

1. Wear safe eye protection.
2. Park the vehicle on a level surface. Block the wheels to prevent the vehicle from moving.
3. Place a screwdriver or other suitable tool in between the caliper and outboard lining plate. Apply light pressure back and forth to force the pistons back slightly from the rotor. Remove the screwdriver. Figure 1.

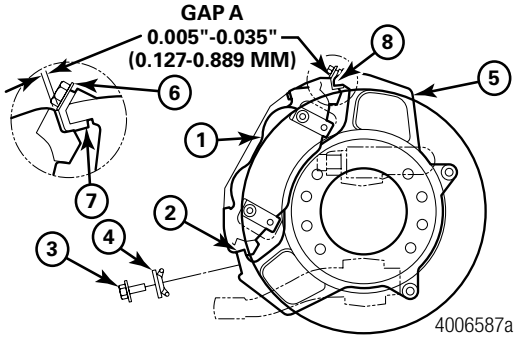

1	Caliper	5	Support
2	Support Rail	6	Bolt
3	Bolt	7	Retainer
4	Spring Assembly	8	Support Rail

Figure 1

4. Remove the bolts and spring assembly.
5. Remove the retainer bolt and retainer.

⚠ CAUTION

Set the caliper on the suspension or support it with a length of strong wire. Do not let the caliper hang from the hydraulic hose. Damage to components can result.

6. Lift the caliper up and off the support rail. Set the caliper on the suspension or support it with a length of strong wire. Do not let the caliper hang from the hydraulic hose.
7. Use a wire brush to clean the support rails and rail surfaces of the caliper.

8. Reinstall the caliper onto the support.
9. Reinstall the retainer.
10. With the caliper in place on the support, pull out on the top end of the caliper to open up a gap between the caliper rail and the retainer.

⚠ CAUTION

Use only enough force to wedge the rails apart. Do not use excessive force. Damage to components can result.

11. Place a screwdriver or other suitable tool into the gap between the rail surfaces at "A" to maintain the distance when measuring. Use only enough force to wedge the rails apart. Do not use excessive force. Damage to components can result.
12. Use a feeler gauge to measure the gap at "A".
    - **If the measurement is within 0.005-0.035-inch (0.127-0.889 mm):** The gap is within specifications and no shims are required.
    - **If the measurement is 0.036-inch (0.914 mm) or greater:** Select an appropriate size shim from the table to achieve a gap as close as possible to 0.005-inch (0.127 mm).
    - **If the gap is greater than 0.130-inch (3.302 mm):** Replace the support.

Gap "A" Measurement	Shim Number
0.036-0.059″ (0.914-1.5 mm)	690*
0.060-0.074″ (1.524-1.879 mm)	691
0.075-0.089″ (1.905-2.26 mm)	692
0.090-0.114″ (2.286-2.895 mm)	693
0.115-0.130″ (2.921-3.302 mm)	694

*Number 690 is the thinnest shim and may not have the part number stamped on its surface.

Install the Shim

1. Remove the retainer.

⚠ CAUTION

Set the caliper on the suspension or support it with a length of strong wire. Do not let the caliper hang from the hydraulic hose. Damage to components can result.

2. Lift the caliper up and off the support rail. Set the caliper on the suspension or support it with a length of strong wire. Do not let the caliper hang from the hydraulic hose.
3. Lubricate the rail surfaces of the caliper with grease approved by Meritor for disc brake applications.
4. With the shim installed, return the caliper to its original position on the support. Install a new retainer and a new bolt provided in Kit R404151706. Figure 2.

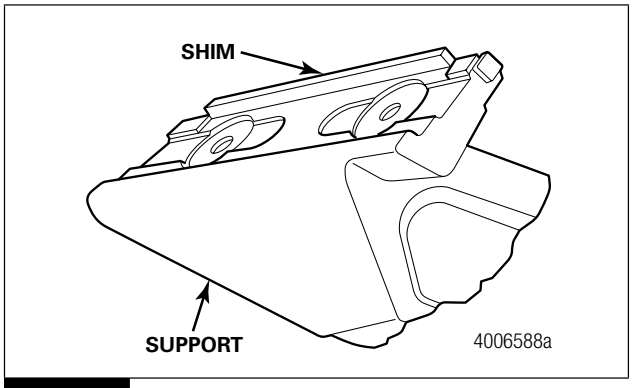

Figure 2

5. Measure the gap at "A" between the retainer and caliper rail to ensure the gap is not less than 0.005-inch (0.127 mm).
    - **If the gap is greater than 0.035-inch (0.889 mm):** Repeat the shim installation steps with a thicker shim. Do not use a shim thickness that will result in a gap width that is less than the 0.005-inch (0.127 mm) minimum.
6. Install a new spring assembly provided in Kit R404151706. Install a new bolt.
7. If the support is replaced, measure the gap again. Install a shim if the gap exceeds 0.035-inch (0.889 mm).

ArvinMeritor™

Meritor Heavy Vehicle Systems, LLC
7975 Dixie Highway
Florence, KY 41042 USA
888-725-9355
arvinmeritor.com

Information contained in this publication was in effect at the time the publication was approved for printing and is subject to change without notice or liability. Meritor Heavy Vehicle Systems, LLC, reserves the right to revise the information presented or to discontinue the production of parts described at any time.

Copyright 2008
ArvinMeritor, Inc.
All Rights Reserved

Printed in USA

TP-0859
Issued 02-08
(16579/22882)

CALIPER INFORMATION CHART

Listed by Piston Diameter

2.362" (60mm) SINGLE PISTON

REFERENCE ONLY CALIPER N/A		*REFERENCE ONLY CALIPER N/A*	
LEFT HAND		RIGHT HAND	
MERITOR NO.	**REPLACES**	**MERITOR NO.**	**REPLACES**
R42R55279	Bendix R55279 EIS RC6200 IBP 4180 G9007L Raybestos RWC-4216 Wagner CR110447	**R42R55278**	Bendix R55278 EIS RC6199 IBP 4179 G9007R Raybestos RWC-4215 Wagner CR110448

MERITOR DISC PAD SET NO.	MERITOR HARDWARE KIT	APPLICATION	NOTES
MD259 (D259)	**R40H5641** (Services one axle)	Dodge	Brake Hose Inlet: 7/16" - 20

2.362" (60mm) SINGLE PISTON

REFERENCE ONLY CALIPER N/A		*REFERENCE ONLY CALIPER N/A*	
LEFT HAND		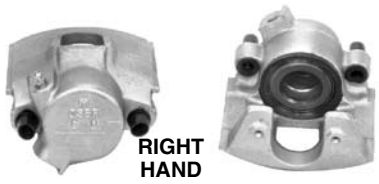 RIGHT HAND	
MERITOR NO.	**REPLACES**	**MERITOR NO.**	**REPLACES**
R42R55519	Bendix R55519 EIS RC6552 IBP 4350 C9013L Raybestos RWC-6022 Wagner CR116344	**R42R55518**	Bendix R55518 EIS RC6551 IBP 4349 C9013R Raybestos RWC-6021 Wagner CR116345

MERITOR DISC PAD SET NO.	MERITOR HARDWARE KIT	APPLICATION	NOTES
MD344 (D344)	**R40H5719** (Services one axle)	Dodge	Brake Hose Inlet: 7/16" - 20

2.362" (60mm) SINGLE PISTON

REFERENCE ONLY CALIPER N/A		*REFERENCE ONLY CALIPER N/A*	
LEFT HAND		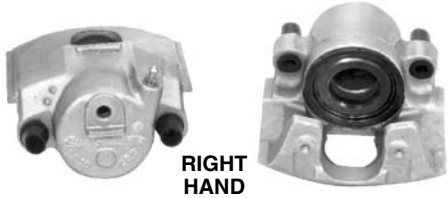 RIGHT HAND	
MERITOR NO.	**REPLACES**	**MERITOR NO.**	**REPLACES**
R42R55507	Bendix R55507 EIS RC6366 IBP 4348 C9011L Raybestos RWC-5278 Wagner CR119052	**R42R55506**	Bendix R55506 EIS RC6365 IBP 4347 C9011R Raybestos RWC-5277 Wagner CR119053

MERITOR DISC PAD SET NO.	MERITOR HARDWARE KIT	APPLICATION	NOTES
MD367 (D367)	**R40H5002** (Services one axle)	Dodge	Brake Hose Inlet: 7/16" - 20

CALIPER INFORMATION CHART

Listed by Piston Diameter

2.362" (60mm) SINGLE PISTON

REFERENCE ONLY CALIPER N/A		*REFERENCE ONLY CALIPER N/A*	
LEFT HAND		RIGHT HAND	
MERITOR NO.	**REPLACES**	**MERITOR NO.**	**REPLACES**
R42R55521	Bendix R55521 EIS — IBP 4352 C9014L Raybestos RWC-4288 Wagner CR119332	**R42R55520**	Bendix R55520 EIS — IBP 4351 C9014R

MERITOR DISC PAD SET NO.	MERITOR HARDWARE KIT	APPLICATION	NOTES
MD416 (D414)	N/A	Dodge	Brake Hose Inlet: 7/16" - 20

2.362" (60mm) SINGLE PISTON

REFERENCE ONLY CALIPER N/A		*REFERENCE ONLY CALIPER N/A*	
LEFT HAND		RIGHT HAND	
MERITOR NO.	**REPLACES**	**MERITOR NO.**	**REPLACES**
R42R55591	Bendix R55591 EIS — IBP 4398 C9024L Raybestos RWC-50071 Wagner CR123608	**R42R55590**	Bendix R55590 EIS — IBP 4397 C9024R Raybestos RWC-50070 Wagner CR123609

MERITOR DISC PAD SET NO.	MERITOR HARDWARE KIT	APPLICATION	NOTES
MD521 (D521)	N/A	Dodge	Casting No. 12205501

2.362" (60mm) SINGLE PISTON

REFERENCE ONLY CALIPER N/A		*REFERENCE ONLY CALIPER N/A*	
LEFT HAND		RIGHT HAND	
MERITOR NO.	**REPLACES**	**MERITOR NO.**	**REPLACES**
R42R55631	Bendix — EIS — IBP 4400 C9025L Raybestos RWC-50073 Wagner CR123606	**R42R55630**	Bendix — EIS — IBP 4399 C9025R Raybestos RWC-50072 Wagner CR123607

MERITOR DISC PAD SET NO.	MERITOR HARDWARE KIT	APPLICATION	NOTES
MD522 (D522)	N/A	Dodge	Casting No. 12580501

CALIPER INFORMATION CHART

Listed by Piston Diameter

2.5" (2 1/2") SINGLE PISTON

LEFT HAND

RIGHT HAND

MERITOR NO.	REPLACES	MERITOR NO.	REPLACES
R42R55210	Bendix R55210 EIS RC6126 IBP 4072 G7005L Raybestos RWC-5210 Wagner CR99022	**R42R55209**	Bendix R55209 EIS RC6125 IBP 4071 G7005R Raybestos RWC-5209 Wagner CR99023

MERITOR DISC PAD SET NO.	MERITOR HARDWARE KIT	APPLICATION	NOTES
MD154 (D154)	**R40H5536** (Services one axle)	Chevrolet, GMC	Brake Hose Inlet: M10 x 1.5

REFERENCE ONLY CALIPER N/A

2.5" (2 1/2") SINGLE PISTON

REFERENCE ONLY CALIPER N/A

LEFT HAND

RIGHT HAND

MERITOR NO.	REPLACES	MERITOR NO.	REPLACES
R42R55265	Bendix R55265 EIS RC6138 IBP 4129 G7010L Raybestos RWC-5220 Wagner CR98888	**R42R55264**	Bendix R55264 EIS RC6137 IBP 4128 G7010R Raybestos RWC-5219 Wagner CR98889

MERITOR DISC PAD SET NO.	MERITOR HARDWARE KIT	APPLICATION	NOTES
MD154 (D154)	**R40H5536** (Services one axle)	Chevrolet, GMC	Brake Hose Inlet: 3/8" - 16

REFERENCE ONLY CALIPER N/A

2.5" (2 1/2") SINGLE PISTON

REFERENCE ONLY CALIPER N/A

LEFT HAND

RIGHT HAND

MERITOR NO.	REPLACES	MERITOR NO.	REPLACES
R42R55499	Bendix R55499 EIS RC6560 IBP 4342 G7028L Raybestos RWC-4416 Wagner CR116290	**R42R55498**	Bendix R55498 EIS RC6559 IBP 4341 G7028R Raybestos RWC-4415 Wagner CR116291

MERITOR DISC PAD SET NO.	MERITOR HARDWARE KIT	APPLICATION	NOTES
MD368 (D368)	**R40H5707** (Services one axle)	Chevrolet, GMC	Brake Hose Inlet: M10 x 1.5

CALIPER INFORMATION CHART

Listed by Piston Diameter

2.5" (2 1/2") SINGLE PISTON

REFERENCE ONLY CALIPER N/A		*REFERENCE ONLY CALIPER N/A*	
LEFT HAND		RIGHT HAND	
MERITOR NO.	**REPLACES**	**MERITOR NO.**	**REPLACES**
R42R55305	Bendix R55305 EIS RC6194 IBP 4370 G7033L Raybestos RWC-4218 Wagner CR107084	**R42R55304**	Bendix R55304 EIS RC6193 IBP 4369 G7033R Raybestos RWC-4217 Wagner CR107085

MERITOR DISC PAD SET NO.	MERITOR HARDWARE KIT	APPLICATION	NOTES
MD215 (D215)	N/A	Chevrolet, GMC	Brake Hose Inlet: M10 x 1.5

2.5" (2 1/2") SINGLE PISTON

REFERENCE ONLY CALIPER N/A		*REFERENCE ONLY CALIPER N/A*	
LEFT HAND		RIGHT HAND	
MERITOR NO.	**REPLACES**	**MERITOR NO.**	**REPLACES**
R42R55617	Bendix R55617 EIS — IBP 4372 G7034L Raybestos RWC-50007 Wagner CR123141	**R42R55616**	Bendix R55616 EIS — IBP 4371 G7034R Raybestos RWC-50006 Wagner CR123142

MERITOR DISC PAD SET NO.	MERITOR HARDWARE KIT	APPLICATION	NOTES
MD505 (D505)	**R40H5788** (Services one axle)	Chevrolet, GMC	—

2.594" (2 19/32") SINGLE PISTON

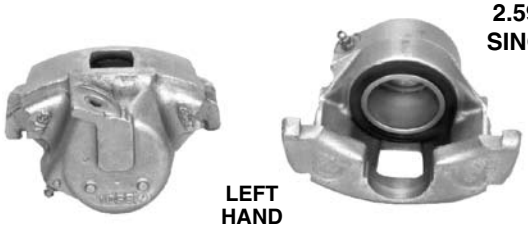 LEFT HAND		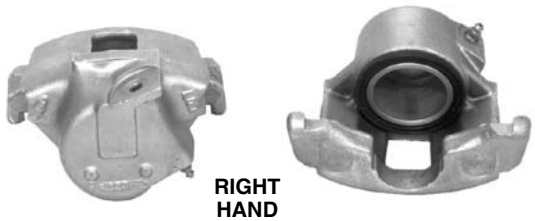 RIGHT HAND	
MERITOR NO.	**REPLACES**	**MERITOR NO.**	**REPLACES**
R42R55234	Bendix R55234 EIS RC6150 IBP 4143 F1009L Raybestos RWC-5234 Wagner CR102428	**R42R55233**	Bendix R55233 EIS RC6149 IBP 4142 F1009R Raybestos RWC-5233 Wagner CR102425

MERITOR DISC PAD SET NO.	MERITOR HARDWARE KIT	APPLICATION	NOTES
MD91 (D91)	**R40H5545** (Services one axle)	Ford	Brake Hose Inlet: 3/8" - 24

CALIPER INFORMATION CHART

Listed by Piston Diameter

2.598" (66mm) SINGLE PISTON

REFERENCE ONLY CALIPER N/A		*REFERENCE ONLY CALIPER N/A*	
LEFT HAND		**RIGHT HAND**	
MERITOR NO.	**REPLACES**	**MERITOR NO.**	**REPLACES**
R42R55249	Bendix R55249 EIS RC6182 IBP 4197 F1012L Raybestos RWC-5249 Wagner CR110413	**R42R55248**	Bendix R55248 EIS RC6181 IBP 4196 F1012R Raybestos RWC-5248 Wagner CR110414

MERITOR DISC PAD SET NO.	MERITOR HARDWARE KIT	APPLICATION	NOTES
MD387 (D387)	**R40H5654** (Services one axle)	Ford	Brake Hose Inlet: 3/8" - 24

2.598" (66mm) SINGLE PISTON

LEFT HAND		**RIGHT HAND**	
MERITOR NO.	**REPLACES**	**MERITOR NO.**	**REPLACES**
R42R55259	Bendix R55259 EIS RC6260 IBP 4310 F1022L Raybestos RWC-4246 Wagner CR112480	**R42R55258**	Bendix R55258 EIS RC6259 IBP 4309 F1022R Raybestos RWC-4245 Wagner CR112481

MERITOR DISC PAD SET NO.	MERITOR HARDWARE KIT	APPLICATION	NOTES
MD326 (D326)	**R40H5653** (Services one axle)	Ford	Brake Hose Inlet: 3/8" - 24

2.598" (66mm) SINGLE PISTON

REFERENCE ONLY CALIPER N/A		*REFERENCE ONLY CALIPER N/A*	
LEFT HAND		**RIGHT HAND**	
MERITOR NO.	**REPLACES**	**MERITOR NO.**	**REPLACES**
R42R55635	Bendix R55635 EIS — IBP 4406 C9028L Raybestos RWC-50125 Wagner CR124108	**R42R55634**	Bendix R55634 EIS — IBP 4405 C9028R Raybestos RWC-50124 Wagner CR124109

MERITOR DISC PAD SET NO.	MERITOR HARDWARE KIT	APPLICATION	NOTES
MD529 (D529)	**R40H5719** (Services one axle)	Dodge	—

CALIPER INFORMATION CHART

Listed by Piston Diameter

2.874" (73mm) SINGLE PISTON

LEFT HAND

RIGHT HAND

MERITOR NO.	REPLACES	MERITOR NO.	REPLACES
R42R55095	Bendix R55095 EIS RC6034 IBP 4034 F1617L Raybestos RWC-5095 Wagner CR76818	**R42R55094**	Bendix R55094 EIS RC6033 IBP 4033 F1617R Raybestos RWC-5094 Wagner CR76819

MERITOR DISC PAD SET NO.	MERITOR HARDWARE KIT	APPLICATION	NOTES
MD50 (D50)	**R40H5511** (Services one axle)	Ford	Brake Hose Inlet: 3/8" - 24

2.874" (73mm) SINGLE PISTON

LEFT HAND

RIGHT HAND

MERITOR NO.	REPLACES	MERITOR NO.	REPLACES
R42R55244	Bendix R55244 EIS RC6148 IBP 4149 F1008L Raybestos RWC-5244 Wagner CR102432	**R42R55243**	Bendix R55243 EIS RC6147 IBP 4148 F1008R Raybestos RWC-5243 Wagner CR102433

MERITOR DISC PAD SET NO.	MERITOR HARDWARE KIT	APPLICATION	NOTES
MD50 (D50)	**R40H5545** (Services one axle)	Ford	Has a "V-Way" anchor plate groove Brake Hose Inlet: 3/8" - 24

REFERENCE ONLY CALIPER N/A

2.874" (73mm) SINGLE PISTON

REFERENCE ONLY CALIPER N/A

LEFT HAND

RIGHT HAND

MERITOR NO.	REPLACES	MERITOR NO.	REPLACES
R42R55255	Bendix R55255, R55293 EIS RC6342 IBP 4308 F1021L Raybestos RWC-4256 Wagner CR112482	**R42R55254**	Bendix R55254, R55292 EIS RC6341 IBP 4307 F1021R Raybestos RWC-4255 Wagner CR112483

MERITOR DISC PAD SET NO.	MERITOR HARDWARE KIT	APPLICATION	NOTES
MD375 (D375)	**R40H5654** (Services one axle)	Ford	Has a "U-Way" anchor plate groove Brake Hose Inlet: 3/8" - 24

CALIPER INFORMATION CHART

Listed by Piston Diameter

2.938" (2 15/16") SINGLE PISTON

LEFT HAND

RIGHT HAND

MERITOR NO.	REPLACES	MERITOR NO.	REPLACES
R42R55216	Bendix R55216 EIS RC6046 IBP 4046 G5051L Raybestos RWC-5039 Wagner CR76050	**R42R55215**	Bendix R55215 EIS RC6045 IBP 4045 G5051R Raybestos RWC-5038 Wagner CR76051

MERITOR DISC PAD SET NO.	MERITOR HARDWARE KIT	APPLICATION	NOTES
MD52 (D52)	**R40H5500** (Services one axle)	Chevrolet, GMC	Distance between Ears: 3" Brake Hose Inlet : 7/16" - 20

REFERENCE ONLY CALIPER N/A

2.938" (2 15/16") SINGLE PISTON

REFERENCE ONLY CALIPER N/A

LEFT HAND

RIGHT HAND

MERITOR NO.	REPLACES	MERITOR NO.	REPLACES
R42R55194	Bendix R55194 EIS RC6124 IBP 4021 G7004L Raybestos RWC-5194 Wagner CR98670	**R42R55193**	Bendix R55193 EIS RC6123 IBP 4020 G7004R Raybestos RWC-5193 Wagner CR98671

MERITOR DISC PAD SET NO.	MERITOR HARDWARE KIT	APPLICATION	NOTES
MD52 (D52)	**R40H5500** (Services one axle)	Chevrolet, GMC	Distance between Ears: 2 3/4" Brake Hose Inlet : 10MM

2.938" (2 15/16") SINGLE PISTON

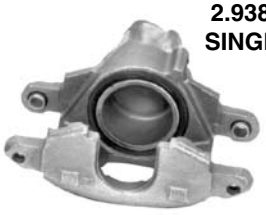

LEFT HAND

RIGHT HAND

MERITOR NO.	REPLACES	MERITOR NO.	REPLACES
R42R55208	Bendix R55208, R55384 EIS RC6140 IBP 4127 G7011/25/40L Raybestos RWC-5208 Wagner CR98884	**R42R55207**	Bendix R55207, R55383 EIS RC6139 IBP 4126 G7011/25/40R Raybestos RWC-5207 Wagner CR98885

MERITOR DISC PAD SET NO.	MERITOR HARDWARE KIT	APPLICATION	NOTES
MD52 (D52)	**R40H5500** (Services one axle)	Chevrolet, GMC	Distance between Ears: 3" Brake Hose Inlet : 10MM

CALIPER INFORMATION CHART

Listed by Piston Diameter

2.938" (2 15/16") SINGLE PISTON

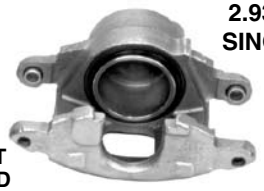

LEFT HAND

RIGHT HAND

MERITOR NO.	REPLACES	MERITOR NO.	REPLACES
R42R55206	Bendix R55206 EIS RC6142 IBP 4209 G7012L Raybestos RWC-5206 Wagner CR98886	**R42R55205**	Bendix R55205 EIS RC6141 IBP 4208 G7012R Raybestos RWC-5205 Wagner CR98887

MERITOR DISC PAD SET NO.	MERITOR HARDWARE KIT	APPLICATION	NOTES
MD52 (D52)	**R40H5500** (Services one axle)	Chevrolet, GMC	Brake Hose Inlet: M10 x 1.5

2.938" (2 15/16") SINGLE PISTON

LEFT HAND

RIGHT HAND

MERITOR NO.	REPLACES	MERITOR NO.	REPLACES
R42R55501	Bendix R55501 EIS RC6558 IBP 4418 G7031L Raybestos RWC-4418 Wagner CR116292	**R42R55500**	Bendix R55500 EIS RC6557 IBP 4417 G7031R Raybestos RWC-4417 Wagner CR116293

MERITOR DISC PAD SET NO.	MERITOR HARDWARE KIT	APPLICATION	NOTES
MD369 (D369)	**R40H5707** (Services one axle)	Chevrolet, GMC	Brake Hose Inlet: M10 x 1.5

2.938" (2 15/16") SINGLE PISTON

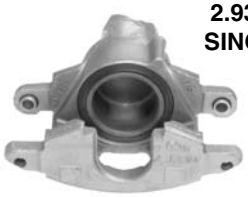

LEFT HAND

RIGHT HAND

MERITOR NO.	REPLACES	MERITOR NO.	REPLACES
R42R55061	Bendix R55061 EIS RC6036 IBP 4036 G0506L Raybestos RWC-5061 Wagner CR76816	**R42R55060**	Bendix R55060 EIS RC6035 IBP 4035 G0506R Raybestos RWC-5060 Wagner CR76817

MERITOR DISC PAD SET NO.	MERITOR HARDWARE KIT	APPLICATION	NOTES
MD52 (D52)	**R40H5500** (Services one axle)	Chevrolet, GMC	Distance between Ears: 3" Brake Hose Inlet : 7/16" - 20

CALIPER INFORMATION CHART

Listed by Piston Diameter

3.094" (3 3/32") SINGLE PISTON

LEFT HAND

RIGHT HAND

MERITOR NO.	REPLACES	MERITOR NO.	REPLACES
R42R55117	Bendix R55117 EIS RC6074 IBP 4074 C9899L Raybestos RWC-5117 Wagner CR83262	**R42R55116**	Bendix R55116 EIS RC6073 IBP 4073 C9899R Raybestos RWC-5116 Wagner CR83263

MERITOR DISC PAD SET NO.	MERITOR HARDWARE KIT	APPLICATION	NOTES
MD269 (D86)	**R40H5516** (Services one axle)	Dodge	Brake Hose Inlet : 7/16" - 20

3.094" (3 3/32") SINGLE PISTON

LEFT HAND

RIGHT HAND

MERITOR NO.	REPLACES	MERITOR NO.	REPLACES
R42R55119	Bendix R55119 EIS RC6120 IBP 4076 C9002L Raybestos — Wagner CR104396	**R42R55118**	Bendix R55118 EIS RC6119 IBP 4075 C9002R Raybestos — Wagner CR104397

MERITOR DISC PAD SET NO.	MERITOR HARDWARE KIT	APPLICATION	NOTES
MD269 (D269)	**R40H5516** (Services one axle)	Dodge	Brake Hose Inlet : 7/16" - 20

3.150" (80mm) SINGLE PISTON

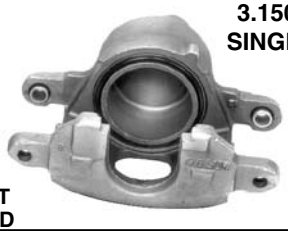

LEFT HAND

RIGHT HAND

MERITOR NO.	REPLACES	MERITOR NO.	REPLACES
R42R55382	Bendix R55382 EIS RC6364 IBP 4123 G7014L Raybestos RWC-5222 Wagner CR98954	**R42R55381**	Bendix R55381 EIS RC6363 IBP 4122 G7014R Raybestos RWC-5221 Wagner CR98955

MERITOR DISC PAD SET NO.	MERITOR HARDWARE KIT	APPLICATION	NOTES
MD392 (D153)	**R40H5500** (Services one axle)	Chevrolet, GMC	Brake Hose Inlet: 3/8" - 16

CALIPER INFORMATION CHART

Listed by Piston Diameter

3.156" (3 5/32") SINGLE PISTON

LEFT HAND

RIGHT HAND

MERITOR NO.	REPLACES	MERITOR NO.	REPLACES
R42R55497	Bendix R55497 EIS RC6556 IBP 4420 G7032L Raybestos RWC-4414 Wagner CR116294	**R42R55496**	Bendix R55496 EIS RC6555 IBP 4419 G7032R Raybestos RWC-4413 Wagner CR116295

MERITOR DISC PAD SET NO.	MERITOR HARDWARE KIT	APPLICATION	NOTES
MD370 (D370)	**R40H5707** (Services one axle)	Chevrolet, GMC	Brake Hose Inlet: M10 x 1.5

3.38" (3 3/8") SINGLE PISTON

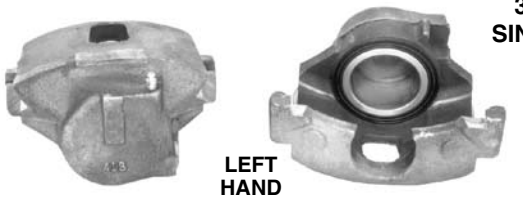

LEFT HAND

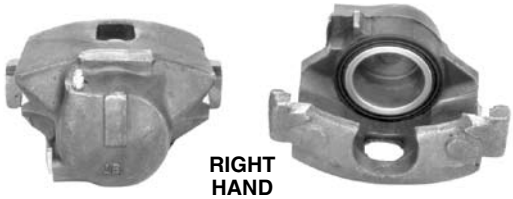

RIGHT HAND

MERITOR NO.	REPLACES	MERITOR NO.	REPLACES
R42R55200	Bendix R55200 EIS RC6152 IBP 4167 G7009L Raybestos RWC-5200 Wagner CR98906	**R42R55199**	Bendix R55199 EIS RC6151 IBP 4166 G7009R Raybestos RWC-5199 Wagner CR98907

MERITOR DISC PAD SET NO.	MERITOR HARDWARE KIT	APPLICATION	NOTES
MD149 (D149)	**R40H5529** (Services one axle)	Chevrolet, GMC	Brake Hose Inlet: M10 x 1.5

3.38" (3 3/8") SINGLE PISTON

RIGHT HAND

LEFT HAND

MERITOR NO.	REPLACES	MERITOR NO.	REPLACES
R42R55099 **R4255099**	Bendix 55098 EIS RC6088 IBP 4909 M3005R Raybestos RWC-5099 Wagner CR130210	**R4255098X** **R4255098** (New)	Bendix 55099 EIS RC6087 IBP 4910 M3005L Raybestos RWC-5098 Wagner CR130211

MERITOR DISC PAD SET NO.	MERITOR HARDWARE KIT	APPLICATION	NOTES
MD380 (D184)	**R40H5519** (Services one wheel)	Medium-Duty ITE	Casting No. for R4255098 (RH) - 2238452R (2238450 RH Assy.*) Casting No. for R4255099 (LH) - 2238451L (223449 LH Assy.*) Brake Hose Inlet: 7/16" - 20 * Information from Robert Bosch Corp.-Bendix Drwg.

CALIPER INFORMATION CHART

Listed by Piston Diameter

3.156" (3 5/32") SINGLE PISTON

MERITOR NO.	REPLACES	MERITOR NO.	REPLACES
R42R55989	Bendix R55989	**R42R55988**	Bendix R55988

MERITOR DISC PAD SET NO.	MERITOR HARDWARE KIT	APPLICATION	NOTES
—	—	—	

CALIPER INFORMATION CHART

Listed by Piston Diameter

2.188" (2 3/16") TWIN PISTON

LEFT HAND

RIGHT HAND

MERITOR NO.	REPLACES	MERITOR NO.	REPLACES
R42R55412	Bendix R55412 EIS RC5091 IBP 4808 F1013L Raybestos RWC-7008 Wagner CR102430	**R42R55411**	Bendix R55411 EIS RC5090 IBP 4807 F1013R Raybestos RWC-7007 Wagner CR102431

MERITOR DISC PAD SET NO.	MERITOR HARDWARE KIT	APPLICATION	NOTES
MD120 (D120)	**R40H5533** (Services one wheel)	Ford	Brake Hose Inlet : 3/8"- 24

2.188" (2 3/16") TWIN PISTON

MERITOR NO.	REPLACES
R42R55456	Bendix R55457 (LH), R55456 (RH) EIS RC5096 (LH), RC5096 (RH) IBP 4804 (LH), 4803(RH), F1019L, F1019R Raybestos RWC-4050 (LH), RWC-4049 (RH) Wagner CR130035 (LH), CR105668 (RH)

MERITOR DISC PAD SET NO.	MERITOR HARDWARE KIT	APPLICATION	NOTES
MD120 (D120)	**R40H5533** (Services one wheel)	Ford	Overall length - 11 1/4"

2.188" (2 3/16") TWIN PISTON

MERITOR NO.	REPLACES
R42R55413	Bendix R55414 (LH), R55413 (RH) EIS RC5098(LH), RC5098(RH) IBP 4806 (LH), 4805 (RH), F1003L, F1003R Raybestos RWC-5182(LH), RWC-5182(RH) Wagner CR130036 (LH), CR105669

MERITOR DISC PAD SET NO.	MERITOR HARDWARE KIT	APPLICATION	NOTES
MD120 (D120)	**R40H5533** (Services one wheel)	Ford	Overall length - 10 1/4"

CALIPER INFORMATION CHART

Listed by Piston Diameter

2.188" (2 3/16") TWIN PISTON

LEFT HAND

RIGHT HAND

MERITOR NO.	REPLACES	MERITOR NO.	REPLACES
R42R55461	Bendix R55461 EIS RC6252 IBP 4810 F1038L Raybestos RWC-6016 Wagner CR116931	R42R55460	Bendix R55460 EIS RC6251 IBP 4809 F1038R Raybestos RWC-6015 Wagner CR116932

MERITOR DISC PAD SET NO.	MERITOR HARDWARE KIT	APPLICATION	NOTES
MD450 (D450)	**R40H5533** (Services one wheel)	Ford	Brake Hose Inlet : 3/8" - 24

2.188" (2 3/16") TWIN PISTON

LEFT HAND

RIGHT HAND

MERITOR NO.	REPLACES	MERITOR NO.	REPLACES
R42R55461P	Bendix R55461P EIS RC6252 IBP — Raybestos RWC-50107 Wagner CR128856	R42R55460P	Bendix R55460P EIS RC6251 IBP — Raybestos RWC-50106 Wagner CR128857

MERITOR DISC PAD SET NO.	MERITOR HARDWARE KIT	APPLICATION	NOTES
MD450 (D450)	**R40H5533** (Services one wheel)	Ford	Phenolic Pistons

2.205" (56mm) TWIN PISTON

LEFT HAND

RIGHT HAND

MERITOR NO.	REPLACES	MERITOR NO.	REPLACES
R42R55461	Bendix — EIS — IBP — Raybestos RWC-50105 Wagner CR128780P	R42R55460	Bendix — EIS — IBP — Raybestos RWC-50104 Wagner CR128781P

MERITOR DISC PAD SET NO.	MERITOR HARDWARE KIT	APPLICATION	NOTES
MD557 (D557)	**R40H5815** (Services one axle)	Ford	3/8"-24 Brake Line Port

CALIPER INFORMATION CHART

Listed by Piston Diameter

2.362" (60mm) TWIN PISTON

LEFT HAND

RIGHT HAND

MERITOR NO.	REPLACES	MERITOR NO.	REPLACES
R42R55605	Bendix R55605 EIS — IBP 4812 F1030L Raybestos RWC-7026 Wagner CR130127	**R42R55604**	Bendix R55604 EIS — IBP 4811 F1030R Raybestos RWC-7025 Wagner CR130128

MERITOR DISC PAD SET NO.	MERITOR HARDWARE KIT	APPLICATION	NOTES
MD411 (D411)	**R40H5735** (Services one axle)	Ford	—

2.375" (2 3/8") TWIN PISTON

LEFT HAND

RIGHT HAND

MERITOR NO.	REPLACES	MERITOR NO.	REPLACES
R42R55455	Bendix R55455 EIS RC6399 IBP 4388 C9019L Raybestos RWC-4072 Wagner CR83308	**R42R55454**	Bendix R55454 EIS RC6398 IBP 4387 C9019R Raybestos RWC-4071 Wagner CR83309

MERITOR DISC PAD SET NO.	MERITOR HARDWARE KIT	APPLICATION	NOTES
MD87 (D87)	**R40H5516** (Services one axle)	Dodge	—

2.50" MERITOR - TWIN PISTON

Front View

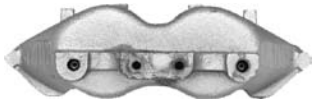

E-4244
Back View

60050150
Back View

MERITOR NO.	REPLACES	MERITOR DISC PAD NO.	MERITOR HARDWARE KIT	NOTES
60050150X **60050150** **Note:** 60050150 is for later model Ford applications with leaf spring clearance	Bendix 055251 Dayton 60-050150 EIS RC6575 GMC 15510024 IBP 4903/4, M3002L/R Raybestos RWC-7800 Wagner CR120313	**MD224**	**60050153** (Services one wheel)	Casting No.472-W Pad Retainers: Ford - 69160457 GM - 6910441 R4194010 Bleeder

CALIPER INFORMATION CHART

Listed by Piston Diameter

2.60" BENDIX TWIN PISTON

Front View

Back View

First Design (Pre -1989)

MERITOR NO.	REPLACES
R42R55245	Bendix 055245 Dayton 60-050174 IBP 4905/6,M3003L/R First Design may have an external joining tube and uses **steel pistons**

Front View

Back View

Second Design (1989-Current)

MERITOR NO.	REPLACES
R42R55314 **R4255314A**	Bendix 055314 EIS RC6573 Wagner CR112057 Second Design is bridged internally and uses **phenolic/metal-faced pistons**

MERITOR DISC PAD SET NO.	MERITOR HARDWARE KIT	NOTES
MD380 (7815 D380)	**R40H5522** (Services one wheel)	Casting No. for R42R55245 - 4151020, 2238229 Casting No. for R4255314A - 4151733 The First and Second Design Calipers are interchangeable as assemblies, but their component parts are not.

2.60" BENDIX TWIN PISTON

Mounting Bolt Holes

Front View

Back View

R42R55314
R4255314A

Bendix 55717
Casting No. 4151733

Front View

Back View

R42R55313
R4255313

Bendix 55313
Casting No. 4151733

MERITOR DISC PAD SET NO.	MERITOR HARDWARE KIT	NOTES
MD380 (7815D380)	**R40H5522** (Services one wheel)	The R4255313 is for Freightliner applications with air ride suspension. R419410 Bleeder 7/16"-24 Inlet

2.60" GM REAR CALIPER CLASS 3 VEHICLES TOP INLET

Photo not available at time of printing.

MERITOR NO.	CASTING NUMBERS	REPLACES	MERITOR DISC PAD NO.	EUCLID HARDWARE KIT	NOTES
R42R55805	1452828	Bendix L55805PM	**MD380**	—	10-4384S

CALIPER INFORMATION CHART

Listed by Piston Diameter

2.88" DAYTON WALTHER - TWIN PISTON

MERITOR NO.	REPLACES	MERITOR DISC PAD NO.	MERITOR HARDWARE KIT	NOTES
60050145X **60050145**	Bendix 55252 Dayton 60-050145 EIS RC6578 Ford E3HZ-2B120A IBP 4907/8, M3004L/R Raybestos RWC-7900 Wagner CR108723	**MD236** (D236)	**R40H5523** (Prior to 1982) (Services one wheel)	Casting No. 0578

2.88" BENDIX TWIN PISTON

Second Design (1988 - Current)

Front View

Back View

MERITOR NO.	REPLACES
R42R55250 (Phenolic/Steel Pistons) **R4255250**	Bendix 055250 Dayton 60-050175 EIS RC6574 GMC 1550101,15514583 IBP 4901/2, M3001L/R ITE 1658443C91 Raybestos RWC-7700 Wagner CR120549

MERITOR DISC PAD SET NO.	MERITOR HARDWARE KIT	NOTES
MD225HD (D225)	**R40H5522** (Service one wheel)	Casting No. for R4255250 - 4150844 The First and Second Design Calipers are interchangeable as assemblies, but their component parts are not.

2.88" BENDIX TWIN PISTON

Front View

Back View

MERITOR NO.	REPLACES
R4255656 (Phenolic/Steel Pistons) **R42R55656**	Bendix 55656 Casting No. 4152279

MERITOR DISC PAD SET NO.	MERITOR HARDWARE KIT	APPLICATION	NOTES
MD225HD (D225)	**R40H5522**	Freightliner	For Freightliner applications with air-ride suspension (Services one wheel)

CALIPER INFORMATION CHART

Listed by Piston Diameter

44mm SPRINTER CALIPER TWIN PISTON

LEFT HAND

RIGHT HAND

MERITOR NO.	REPLACES	MERITOR NO.	REPLACES
R4256546	Bendix 56546 Wabco 40 244 009	**R4256547**	Bendix 56547 Wabco 40 244 010

MERITOR DISC PAD SET NO.	MERITOR HARDWARE KIT	APPLICATION	NOTES
MD949	—	Sprinter	—

44mm SPRINTER TWIN PISTON

MERITOR NO.	REPLACES	MERITOR NO.	REPLACES
R4256544	Bendix 56544 Wabco 40 244 017	**R4256545**	Bendix 56545 Wabco 40 244 018

MERITOR DISC PAD NO.	MERITOR HARDWARE KIT	NOTES
MD949 (D184)	**—**	Application Sprinter 2500 / 3500

45mm TWIN PISTON

MERITOR NO.	REPLACES	MERITOR NO.	REPLACES
R4255857	Bendix 55857 Raybestos — Ford XC2Z2552AD	**R4255858**	Bendix 55858 Raybestos — Ford XC2Z2553AD

MERITOR DISC PAD NO.	MERITOR HARDWARE KIT	NOTES
MD411	**R40H5735**	Casting No. 132705 Application Ford E250 / 350

CALIPER INFORMATION CHART

Listed by Piston Diameter

45mm TWIN PISTON

MERITOR NO.	REPLACES	MERITOR NO.	REPLACES
R42R5966	Chrysler 05018586AA	**R4255973**	Chrysler 05018587AA

MERITOR DISC PAD NO.	MERITOR HARDWARE KIT	NOTES
MD702	**R405707**	Casting No. 14599301, 13544402 Application Dodge Truck Rear 2001/2002

45mm DODGE PISTON

MERITOR NO.	CASTING NUMBERS	REPLACES	MERITOR NO.	CASTING NUMBERS	REPLACES
R4212490	14599301/ 13544402	—	**R4212491**	14599301/ 13544402	—

MERITOR DISC PAD NO.	MERITOR HARDWARE KIT	NOTES
MD702	**R40H5974**	Casting No. 14599301, 13544402 Application Dodge Truck Rear 2001/2002

48mm TWIN PISTON

MERITOR NO.	REPLACES	MERITOR NO.	REPLACES
R4212243	Ford 5C3Z2553AA	**R4212244**	Ford 5C3Z2552AA

MERITOR DISC PAD NO.	MERITOR HARDWARE KIT	NOTES
MD1069	**R4012081**	Casting No. 144150 Application Ford 2005/2006 F250/350 SRW over 8500 GVW

CALIPER INFORMATION CHART

Listed by Piston Diameter

48mm
MITSUBISHI FUSO CALIPER

Photo not available at time of printing.	*Photo not available at time of printing.*

MERITOR NO.	REPLACES	MERITOR NO.	REPLACES
R42R1012698	—	**R42R1012699**	—

MERITOR DISC PAD SET NO.	MERITOR HARDWARE KIT	APPLICATION	NOTES
MD624	**R40H5735**	Mitsubishi	—

51mm
TWIN PISTON

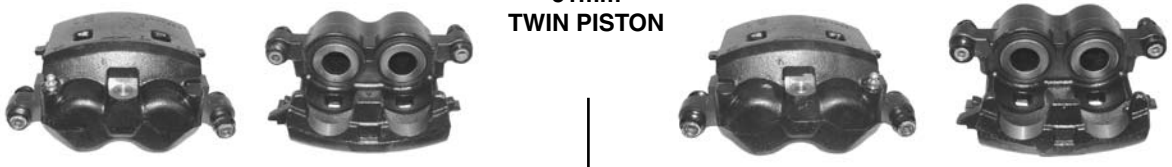

MERITOR NO.	REPLACES	MERITOR NO.	REPLACES
R4255972	Bendix 55972 Chrysler 05018570AA	**R4255973**	Chrysler 05018571AA

MERITOR DISC PAD NO.	MERITOR HARDWARE KIT	NOTES
MD702	**R40H5707**	Casting No. 13544401 Application Dodge Truck Rear 2001/2002

51mm
MITSUBISHI FUSO CALIPERS

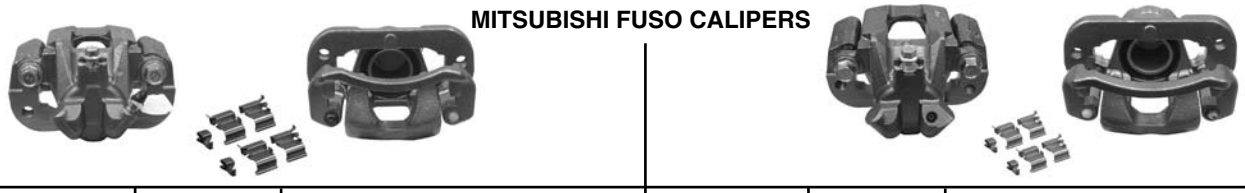

MERITOR NO.	CASTING NUMBERS	REPLACES	MERITOR NO.	CASTING NUMBERS	REPLACES
R42R1012433	15T K32	Mitsubishi Fuso 10-6204S	**R42R1012434**	15T K31	Mitsubishi Fuso 10-6176S

MERITOR DISC PAD NO.	MERITOR HARDWARE KIT	NOTES
MD433	**R402212504**	Inlet Port: 10 x 1mm

CALIPER INFORMATION CHART
Listed by Piston Diameter

51mm MITSUBISHI FUSO CALIPERS

MERITOR NO.	CASTING NUMBERS	REPLACES	MERITOR NO.	CASTING NUMBERS	REPLACES
R42R1012435	—	Mitsubishi Fuso 10-6205S	**R42R1912436**	—	Mitsubishi Fuso 10-6177S

MERITOR DISC PAD NO.	MERITOR HARDWARE KIT	NOTES
MD433	**—**	Inlet Port: 10 x 1mm

51mm MITSUBISHI FUSO REAR FE CALIPERS

MERITOR NO.	CASTING NUMBERS	REPLACES	MERITOR NO.	CASTING NUMBERS	REPLACES
R42R1012439	15L 15M 15AM	Mitsubishi Fuso FE-HD Model 639L 10-6238S	**R42R1012440**	15L 15M 15AM	Mitsubishi Fuso FE-HD Model 639L 10-6239S

MERITOR DISC PAD NO.	MERITOR HARDWARE KIT	NOTES
MD734	**R402212504**	Inlet Port: 10 x 1mm

51mm MITSUBISHI FUSO REAR FE CALIPERS

Photo not available at time of printing.

Photo not available at time of printing.

MERITOR NO.	CASTING NUMBERS	REPLACES	MERITOR NO.	CASTING NUMBERS	REPLACES
R42R1012441	15L 15M 15AM	Mitsubishi Fuso FE-HD Model 639L 10-6236S	**R42R1012442**	15L 15M 15AM	Mitsubishi Fuso FE-HD Model 639L 10-6237S

MERITOR DISC PAD NO.	MERITOR HARDWARE KIT	NOTES
MD734	**R402212504**	Inlet Port: 10 x 1mm

CALIPER INFORMATION CHART

Listed by Piston Diameter

51mm
MITSUBISHI FUSO CALIPERS

Photo not available at time of printing.

MERITOR NO.	CASTING NUMBERS	REPLACES	MERITOR NO.	CASTING NUMBERS	REPLACES
R42R1012455	—	Mitsubishi Fuso FE-HD Model 639T 10-6236S	**R42R1012456**	15L 15M 15AM	Mitsubishi Fuso FE-HD Model 639T 10-6238S

MERITOR DISC PAD NO.	MERITOR HARDWARE KIT	NOTES
MD734	**R402212504**	Inlet Port: 10 x 1mm

51mm
MITSUBISHI FUSO CALIPERS

Photo not available at time of printing.

MERITOR NO.	REPLACES	MERITOR NO.	REPLACES
R42R1012457	Mitsubishi Fuso FE-HD Model 639T 10-6237S	**R42R1012458**	Mitsubishi Fuso FE-HD Model 639T 10-6239S

MERITOR DISC PAD NO.	MERITOR HARDWARE KIT	NOTES
MD734	—	Inlet Port: 10 x 1mm

51mm
TWIN PISTON

MERITOR NO.	REPLACES	MERITOR NO.	REPLACES
R4255794	Bendix 55794 Ford XL3Z2B120EA	**R4255795**	Bendix 55795 Ford XL3Z2B121EA

MERITOR DISC PAD NO.	MERITOR HARDWARE KIT	NOTES
MD702	**R40H15087**	Casting No. 129297 Application Ford Front F250 Light Duty 1997-2004

CALIPER INFORMATION CHART
Listed by Piston Diameter

54mm TWIN PISTON

MERITOR NO.	REPLACES	MERITOR NO.	REPLACES
R4255915	Bendix 55915 Chrysler 05003894AA	**R4255916**	Bendix 55916 Chrysler 05003895AA

MERITOR DISC PAD NO.	MERITOR HARDWARE KIT	NOTES
MD758	**R4011079**	Casting No. 131072, 137149, 143477, 152280 Application Dodge

54mm TWIN PISTON

MERITOR NO.	REPLACES	MERITOR NO.	REPLACES
R4255865	Bendix 55865 Chrysler 05018236AA Raybestos RC10967	**R4255866**	Bendix 55866 Chrysler 05018237AA Raybestos RC10968

MERITOR DISC PAD NO.	MERITOR HARDWARE KIT	NOTES
MD758	**R4011079**	Casting No. 131072, 137149, 143477, 152280 Application Dodge Ram 2000-2001

54mm TWIN PISTON

MERITOR NO.	REPLACES	MERITOR NO.	REPLACES
R421005102062AA	Bendix — Chrysler 05102062AA	**R421005102063AA**	Bendix — Chrysler 05102063AA

MERITOR DISC PAD NO.	MERITOR HARDWARE KIT	NOTES
—	—	Casting No. 143477, 152280 Application Dodge

CALIPER INFORMATION CHART

Listed by Piston Diameter

54mm
TWIN PISTON

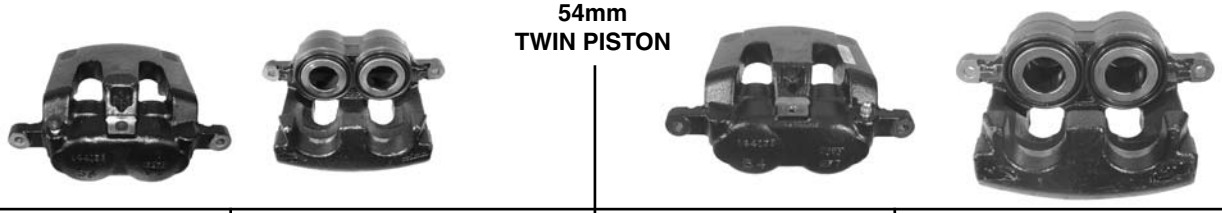

MERITOR NO.	REPLACES	MERITOR NO.	REPLACES
R4212248	Ford 5C3Z2553BA	**R4212249**	Ford 5C3Z2552BA

MERITOR DISC PAD NO.	MERITOR HARDWARE KIT	NOTES
MD1069	**R4012081**	Casting No. 144138 Application Ford 2005/2006 F250/135 DRW over 8500 GVW

54mm
NISSAN UD CALIPERS

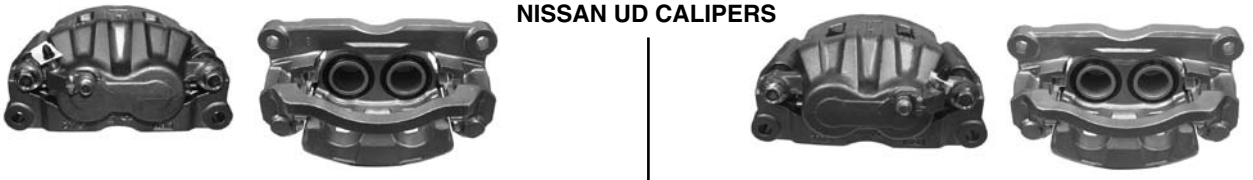

MERITOR NO.	CASTING NUMBERS	REPLACES	MERITOR NO.	CASTING NUMBERS	REPLACES
R42R1012459	AD45V, 2112	Nissan UD 10-7154S	**R42R1012460**	—	Nissan UD 10-7155S

MERITOR DISC PAD NO.	MERITOR HARDWARE KIT	NOTES
MD646	**—**	Inlet Port: 10 x 1mm

CALIPER INFORMATION CHART
Listed by Piston Diameter

54mm
ISUZU / GM CALIPERS

MERITOR NO.	CASTING NUMBERS	REPLACES	MERITOR NO.	CASTING NUMBERS	REPLACES
R4212269	5407 A9344 **5707**	Isuzu/GM 97365908	**R4212270**	5407 A935X **5721**	Isuzu/GM 97365907

MERITOR DISC PAD NO.	MERITOR HARDWARE KIT	NOTES
MD827	**R4012469** **(Services one wheel)**	—

54mm
ISUZU / GM CALIPERS
TWIN PISTON

MERITOR NO.	CASTING NUMBERS	REPLACES	MERITOR NO.	CASTING NUMBERS	REPLACES
R4212271X	AD54T **2918** A922X	Isuzu/GM 97720216 Includes Disc Pads	**R4212272X**	AD54T **5111** A923X	Isuzu/GM 97720206 Includes Disc Pads

MERITOR DISC PAD NO.	MERITOR HARDWARE KIT	NOTES
MD825	**R402212504**	—

54mm
ISUZU CALIPERS

Photo not available at time of printing.

Photo not available at time of printing.

MERITOR NO.	CASTING NUMBERS	REPLACES	MERITOR NO.	CASTING NUMBERS	REPLACES
R42R1012655	AD76T **3516** 42107	—	**R42R1012656**	—	—

MERITOR DISC PAD NO.	MERITOR HARDWARE KIT	NOTES
MD675	**—**	Inlet Port: 10 x 1mm

CALIPER INFORMATION CHART

Listed by Piston Diameter

56mm TWIN PISTON

MERITOR NO.	REPLACES	MERITOR NO.	REPLACES
R4255887	Bendix 55887 Chrysler 05003906AB, 05003906AA	**R4255888**	Bendix 55888 Chrysler 05003907AB, 05003907AA

MERITOR DISC PAD NO.	MERITOR HARDWARE KIT	NOTES
MD655	**R40H5864**	Casting No. 134254, 131447 Application Dodge - Ram Van

56mm TWIN PISTON

MERITOR NO.	REPLACES	MERITOR NO.	REPLACES
R4255889	Bendix 55889 Chrysler 05015252AA	**R4255890**	Bendix 55890 Chrysler 05015253AA

MERITOR DISC PAD NO.	MERITOR HARDWARE KIT	NOTES
MD821	**R40H5975**	Casting No. 134248 Application Dodge Front

56mm TWIN PISTON

MERITOR NO.	REPLACES	MERITOR NO.	REPLACES
R421005093266AA	Bendix — Chrysler 05093266A	**R421005093269AA**	Bendix — Chrysler 0593269A

MERITOR DISC PAD NO.	MERITOR HARDWARE KIT	NOTES
MD965	**R4011079**	Casting No. 134248 Application Dodge Ram 2500/3500

NEW CALIPER INFORMATION CHART

Listed by Piston Diameter

56mm TWIN PISTON

MERITOR NO.	REPLACES	MERITOR NO.	REPLACES
R4255748	Bendix 55748 Ford F7TZ2B120AA	**R4255749**	Bendix 55749 Ford F7TZ2B121AA

MERITOR DISC PAD NO.	MERITOR HARDWARE KIT	NOTES
MD655	**R40H5864**	Casting No. 134247, 127951 Application Ford F250/350 1995-98 E250, E350 1999-06

57mm ISUZU / GM CALIPE

MERITOR NO.	CASTING NUMBERS	REPLACES	MERITOR NO.	CASTING NUMBERS	REPLACES
R4212273	5705 A940 **4Z15**	Isuzu/GM 97365910 Includes Disc Pads	**R4212274**	5705 A940 **5609**	Isuzu/GM 97365909 Includes Disc Pads

MERITOR DISC PAD NO.	MERITOR HARDWARE KIT	NOTES
MD827	**R4012284** (Services one wheel)	—

57mm ISUZU / GM CALIPERS

MERITOR NO.	CASTING NUMBERS	REPLACES	MERITOR NO.	CASTING NUMBERS	REPLACES
R4212275	AD57T **518** 5702	Isuzu/GM 97207148 Includes Disc Pads	**R4212276**	AD57T **54D** 5702	Isuzu/GM 97207147 Includes Disc Pads

MERITOR DISC PAD NO.	MERITOR HARDWARE KIT	NOTES
MD827	**R402212504** (Services one wheel)	—

NEW CALIPER INFORMATION CHART

Listed by Piston Diameter

57mm
ISUZU / GM CALIPERS

MERITOR NO.	CASTING NUMBERS	REPLACES	MERITOR NO.	CASTING NUMBERS	REPLACES
R4212277X	D57T **4X13** A918 3	Isuzu/GM 97365910	**R4212278X**	D57T **829** BD012	Isuzu/GM 97365909

MERITOR DISC PAD NO.	MERITOR HARDWARE KIT	NOTES
MD826	**R4012283** (Services one wheel)	—

60mm
TWIN PISTON

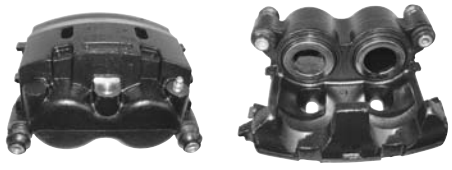

MERITOR NO.	REPLACES	MERITOR NO.	REPLACES
R4255861	Bendix 55861 Raybestos — Ford F81Z2B120AA	**R4255862**	Bendix 55862 Raybestos — Ford F81Z2B121AA

MERITOR DISC PAD NO.	MERITOR HARDWARE KIT	NOTES
MD777	**R40H15088**	Casting No. 130307 Application Ford F450

60mm
TWIN PISTON

MERITOR NO.	REPLACES	CASTING NO.	APPLICATION
R4212068	GM 88982725	136743	GM Platform GMT560 4500, 5500, 6500

MERITOR DISC PAD NO.	MERITOR HARDWARE KIT	NOTES
MD1010	—	—

NEW CALIPER INFORMATION CHART

Listed by Piston Diameter

60mm TWIN PISTON

MERITOR NO.	REPLACES	MERITOR NO.	REPLACES
R4255604 For Reman use R42R55604	Bendix 55604 Ford E8TZ2B120A Raybestos RWC7026	**R4255605** For Reman use R42R55605	Bendix 55605 Ford E8TZ2B121A Raybestos RWC7025

MERITOR DISC PAD NO.	MERITOR HARDWARE KIT	NOTES
MD411	**R40H5735**	Casting No. 120684 Application Ford F450 Front and Rear 1988-1997

60mm TWIN PISTON

MERITOR NO.	REPLACES	MERITOR NO.	REPLACES
R4212077	Ford 5C3Z2B120CA	**R4212078**	Ford 5C3Z2B121CA

MERITOR DISC PAD NO.	MERITOR HARDWARE KIT	NOTES
MD1069	**R4012081**	Casting No. 154518 Application Ford Front 2005/06, F250/350 DRW over 8500 GVW

60mm TWIN PISTON

MERITOR NO.	REPLACES	MERITOR NO.	REPLACES
R4212083	Ford 5C3Z2B120AA	**R4212084**	Ford 5C3Z2B121AA

MERITOR DISC PAD NO.	MERITOR HARDWARE KIT	NOTES
MD1069	—	Casting No. 142296 Application Ford Front 2005/06, F250/350 SRW over 8500 GVW

NEW CALIPER INFORMATION CHART

Listed by Piston Diameter

60mm
TWIN PISTON

MERITOR NO.	REPLACES	MERITOR NO.	REPLACES
R4212253	Ford 5C3Z2B120BA	**R4212254**	Ford 5C3Z2B121BA

MERITOR DISC PAD NO.	MERITOR HARDWARE KIT	NOTES
MD1066	**R4012257**	Casting No. 142298 Application Ford Front Steer Axle 2005/2006 F450/550

66MM
TWIN PISTON

Front View

Back View

MERITOR NO.	REPLACES	CASTING NO.
R424153263	55849 Bendix 4153273 Bosch 2501839C91 ITE	4153269

MERITOR DISC PAD SET NO.	MERITOR HARDWARE KIT	NOTES
MD786A (7654D286)	**R4011754** (Services one wheel)	Bosch Pin Slide. Brake Pad Included

66mm
TWIN PISTON

MERITOR NO.	REPLACES	CASTING NO.	APPLICATION
R4212067	GM 88982726	135607	GM Platform GMT560 4500, 5500, 6500

MERITOR DISC PAD NO.	MERITOR HARDWARE KIT	NOTES
MD1010	—	—

NEW CALIPER INFORMATION CHART

Listed by Piston Diameter

66mm TWIN PISTON

MERITOR NO.	REPLACES	CASTING NO.	APPLICATION
R4212069	GM 89040158	145513	GM Platform GMT560 4500, 5500, 6500

MERITOR DISC PAD NO.	MERITOR HARDWARE KIT	NOTES
MD1010	—	—

73MM TWIN PISTON

Front View

Back View

MERITOR NO.	REPLACES	CASTING NO.
R424153216	55850 Bendix 4153216 Bosch 2501838C91 ITE	4153222

MERITOR DISC PAD SET NO.	MERITOR HARDWARE KIT	NOTES
MD786 (7655D286)	**R4011754** (Services one wheel)	Bosch Pin Slide Brake Pad Included

73mm (2.87") TWIN PISTON - VARGA

MERITOR NO.	REPLACES	MERITOR NO.	REPLACES
R427178X **R427178** (New) Left Hand (Shown)	—	**R427179X** **R427179** (New) Right Hand	—

MERITOR DISC PAD SET NO.	MERITOR HARDWARE KIT	APPLICATION	NOTES
MD379 (D327)	**R407182** (Services one wheel)	Ford Cargo	R427178 Casting Number VFCC 0005-1 R427179 Casting Number VFCC 2284-5

NEW CALIPER INFORMATION CHART

Listed by Piston Diameter

60mm
TWIN PISTON

MERITOR NO.	REPLACES	MERITOR NO.	REPLACES
LRG714	Meritor LRG714	**LRG715**	Meritor LRG715

MERITOR DISC PAD NO.	MERITOR HARDWARE KIT	NOTES
MDP5040	**SJ1035**	Application Hino

60mm
TWIN PISTON

MERITOR NO.	REPLACES	MERITOR NO.	REPLACES
LRG716	Meritor LRG716	**LRG717**	Meritor LRG717

MERITOR DISC PAD NO.	MERITOR HARDWARE KIT	NOTES
MDP5040	**SJ1035**	Application Hino

64mm
QUADRAULIC PHENOLIC PISTON

MERITOR NO.	REPLACES	MERITOR NO.	REPLACES
60450474001	Meritor 60450474 No Disc Pads Meritor 60450474001 Includes Disc Pads	**60450473001**	Meritor 60450473 No Disc Pads Meritor 60450473001 Includes Disc Pads

MERITOR DISC PAD SET NO.	MERITOR HARDWARE KIT	NOTES
KIT769AM **MD769** (7636D769)	**R4011729** (Services one wheel)	—

CALIPER INFORMATION CHART

70mm (2.76")
FOUR PISTON

MERITOR NO.	REPLACES	MERITOR NO.	REPLACES
60050313	Meritor 60050313	**60050312**	Meritor 60050312

MERITOR DISC PAD SET NO.	MERITOR HARDWARE KIT	APPLICATION	NOTES
KIT769AM (7636D769)	**R4011121** (Wheel Kit)	GM ITE	—

70mm (2.76")
FOUR PISTON

MERITOR NO.	REPLACES	MERITOR NO.	REPLACES
60450454	Meritor 60450454 Includes Disc Pads Meritor 60050320 No Disc Pads	**60450455 (New)**	Meritor 60450455 Includes Disc Pads Meritor 60050321 No Disc Pads

MERITOR DISC PAD SET NO.	MERITOR HARDWARE KIT	APPLICATION	NOTES
KIT769AM (7636D769)	**R4011121** (Wheel Kit)	GM ITE	—

70mm
PHENOLIC PISTON

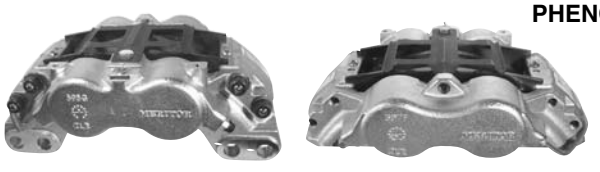

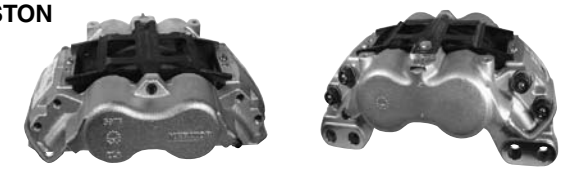

MERITOR NO.	REPLACES	MERITOR NO.	REPLACES
60450483	Meritor 60450483 No Disc Pads Meritor 60450469002 Includes Disc Pads	**60450482**	Meritor 60450482 No Disc Pads Meritor 60450468002 Includes Disc Pads

MERITOR DISC PAD SET NO.	MERITOR HARDWARE KIT	NOTES
KIT769AM (7636D769)	**R4011729** (Services one wheel)	

NEW CALIPER INFORMATION CHART

Listed by Piston Diameter

GM REAR CALIPER CLASS 3 VEHICLES

Photo not available at time of printing.	*Photo not available at time of printing.*

MERITOR NO.	REPLACES	MERITOR NO.	REPLACES
R42R55994 (RH)	Bendix L55994PM	**R42R55995 (LH)**	Bendix L55995PM

MERITOR DISC PAD SET NO.	MERITOR HARDWARE KIT	APPLICATION	NOTES
MD974	**—**	—	—

GM REAR CALIPER CLASS 3 VEHICLES

Photo not available at time of printing.	*Photo not available at time of printing.*

MERITOR NO.	REPLACES	MERITOR NO.	REPLACES
R42R55943 (RH)	Bendix L55943PM	**R42R55944 (LH)**	Bendix L55944PM

MERITOR DISC PAD SET NO.	MERITOR HARDWARE KIT	APPLICATION	NOTES
MD784	**—**	—	—

NEW CALIPER INFORMATION CHART

Listed by Piston Diameter

GM REAR CALIPER VEHICLES

Photo not available at time of printing.	*Photo not available at time of printing.*

MERITOR NO.	REPLACES	MERITOR NO.	REPLACES
R42R55853 (RH)	Bendix L55853PM	**R42R55854 (LH)**	Bendix L55854PM

MERITOR DISC PAD SET NO.	EUCLID HARDWARE KIT	APPLICATION	NOTES
MD785	**—**	—	R42R55853: 10-14373 R42R55854: 10-14372

GM REAR CALIPER

Photo not available at time of printing.	*Photo not available at time of printing.*

MERITOR NO.	REPLACES	MERITOR NO.	REPLACES
R42R55855 (RH)	Bendix L55855PM	**R42R55856 (LH)**	Bendix L55856PM

MERITOR DISC PAD SET NO.	EUCLID HARDWARE KIT	APPLICATION	NOTES
MD784	**—**	—	Casting No.: 1802573 R42R55855: 10-4377S R42R55856: 10-4376S

MERITOR QUADRAULIC DISC BRAKE IDENTIFICATION CHART

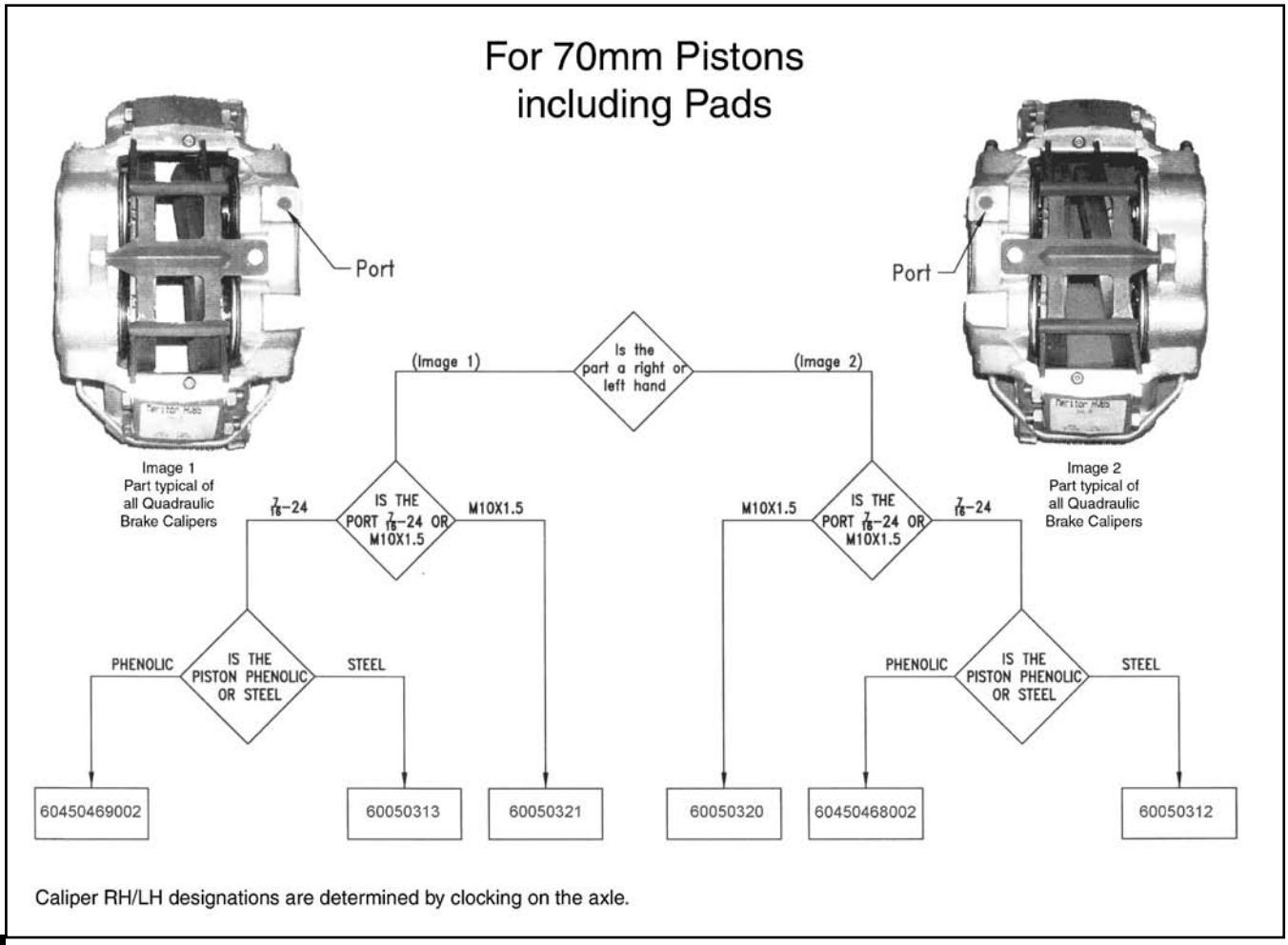

Caliper RH/LH designations are determined by clocking on the axle.

HYDRAULIC DISC BRAKE PAD INDEX

DISC BRAKES

Listed by FMSI Plate Number

FMSI PLATE NO.	FMSI LINING NO.	MERITOR VALUE LINE DISC PAD SET	MERITOR DISC PAD SET	MERITOR PREMINUM LINE DISC PAD SET	HOLD DOWN KIT	GUIDE PIN	PAD SHIM NO.
D50	788 or	MVD50	MD50		R40H5654	R40H5545	---
D50	7013A	MVD50	MD50		R40H5654	R40H5545	---
D52	728A or	MVD52	MD52		R40H5500	---	---
D52	7214A	MVD52	MD52		R40H5500	---	---
D86	7019		MD269		R40H5516	---	---
D91	7027A	MVD91	MD91		---	---	---
D120	7054	MVD120	MD120	MMD120	60050135	---	---
D123	7019		MD269		R40H5516	R40H5004DP	---
D149	7018A	MVD149	MD149	MMD149	R40H5529	---	---
D153	7084A		MD392		R40H5500	---	---
D154	7070A or	MVD154	MD154		R40H5536	---	---
D154	7480 or	MVD154	MD154		R40H5536	---	---
D154	7480A	MVD154	MD154		R40H5536	---	---
D171	7805		MD171	MMD171	---	---	---
D184	7806	MVD184	MD184	MMD184	---	R40H5010	---
D202	7480A		MD154		R40H5536	R40H5004DP	---
D215	7136	MVD215	MD215		---	---	---
D224	7141 or	MVD224	MD224	MMD224	60050153	---	---
D224	7807	MVD224	MD224	MMD224	60050153	---	---
D225	7142 or	MVD225	MD225	MMD225	R40H5522	R40H5010	---
D225	7808 or	MVD225	MD225	MMD225	R40H5522	R40H5010	---
D225	7818	MVD225	MD225	MMD225	R40H5522	R40H5010	---
D236	7149 or	MVD236	MD236	MMD236	69310782	---	---
D236	7809	MVD236	MD236	MMD236	69310782	69310693	---
D249	7125		MD387		R40H5653	R407130	---
D259	7164	MVD259	MD259		---	---	---
D269	7179A	MVD269	MD269		R40H5516	---	---
D269	7179	MVD269	MD269		R40H5516	---	---
D326	7224	MVD326	MD326		R40H5653	R407130	---
D327	7812		MD379	MMD379	R40H5536	---	---
D344	7237A		MD344		R40H5719	---	---
D360	788		MD375		R40H5653	---	---
D368	7259	MVD368	MD368		R40H5707	R40H5083	R4066306
D369	7259	MVD369	MD369	MMD369	R40H5707	R40H5083	---
D370	7260 or	MVD370	MD370	MMD370	R40H5707	---	---
D370	7260D	MVD370	MD370	MMD370	R40H5707	---	---
D375	7264 or	MVD375	MD375		R40H5654	---	---
D375	7361	MVD375	MD375		R40H5654	---	---
D379	7814		MD379	MMD379	R40H5536	---	---
D380	7815	MVD380	MD380		---	---	---
D387	7125		MD387		R40H5653	R407130	---
D392	7280A	MVD392	MD392		R40H5500	R40H5004DP	---
D411	7299	MVD411	MD411	MMD411	R40H5735	---	---
D414	7302		MD416		---	R40H5045	---

HYDRAULIC DISC BRAKE PAD INDEX

DISC BRAKES

Listed by FMSI Plate Number

FMSI PLATE NO.	FMSI LINING NO.	MERITOR VALUE LINE DISC PAD SET	MERITOR DISC PAD SET	MERITOR PREMINUM LINE DISC PAD SET	HOLD DOWN KIT	GUIDE PIN	PAD SHIM NO.
D416	7258A		MD416		---	---	---
D433	7500	MVD433	MD433		---	---	---
D442	7816		MD442		---	---	---
D450	7330	MVD450	MD450	MMD450	---	R407130	---
D459	7339	MVD459	MD459	MMD459	R40H5788	R40H5083	---
D477	7507A	MVD477	MD477		R40H5605	---	---
D494	7817	MVD494	MD494		---	---	---
D505	7384	MVD505	MD505		R40H5788	---	---
D521	7403 or	MVD521	MD521		---	R40H5045	---
D521	7403A	MVD521	MD521		---	R40H5045	---
D522	7404A	MVD522	MD522		---	R40H5045	---
D524	7406	MVD524	MD524		R40H5607	---	---
D529	7410	MVD529	MD529		R40H5719	---	---
D543	7081		MD543		R40H5529	R40H5010	---
D546	7425				---	---	---
D557	7436	MVD557	MD557		R40H5815	---	---
D591	7470A	MVD591	MD591		---	R40H5045	---
D593	7410A	MVD529	MD529		R40H5719	---	---
D601	7479	MVD601	MD601		---	---	---
D607	7489		MD387		R40H5653	R407130	---
D624	7499		MD624		---	---	---
D626	7503		MD626		---	---	---
D632	7503	MVD632	MD632		---	---	---
D642	7470A	MVD591	MD591		---	---	---
D646	7527		MD646		---	---	---
D652	7532	MVD652	MD652		---	---	---
D654	7534A	MVD387	MD387		R40H5653	R407130	---
D655	7535	MVD655	MD655	MMD655	R40H15074	---	---
D656	7536	MVD601	MD601		---	---	---
D675	7425	MVD675	MD675	MMD675	---	---	---
D679	7558	MVD679	MD679	MMD679	---	---	---
D702	7576	MVD702	MD702	MMD702	R40H5707	R40H15087	---
D711	7584	MVD711	MD711	MMD711	---	---	---
D715	7807		MD715		---	---	---
D716	7587	MVD716	MD716		---	---	---
D717	7815		MD717		---	---	---
D726	7593		MD726		---	---	---
D729	7596	MVD729	MD729		---	---	---
D734	7603		MD734		---	---	---
D735	7604		MD735		---	---	---
D746	7616	MVD746	MD746		---	---	---
D756	7625	MVD756	MD756		---	---	---
D757	7626	MVD757	MD757	MMD757	---	---	---
D758	7627	MVD758	MD758		R40H15068	---	---

HYDRAULIC DISC BRAKE PAD INDEX

DISC BRAKES

Listed by FMSI Plate Number

FMSI PLATE NO.	FMSI LINING NO.	MERITOR VALUE LINE DISC PAD SET	MERITOR DISC PAD SET	MERITOR PREMINUM LINE DISC PAD SET	HOLD DOWN KIT	GUIDE PIN	PAD SHIM NO.
D769	7636	MVD769	MD769	MMD769	R4011121	---	---
D769	7636	MVD769	MD769	MMD769	R4011729	---	---
D777	7627	MVD777	MD777	MMD777	---	---	---
D784	7652	MVD784	MD784		R40H5931	---	---
D785	7653	MVD785			---	---	---
D786A	7654	MVD786A	MD786A	MMD786A	R4011754	---	---
D786	7655	MVD786	MD786	MMD786	---	---	---
D802	7673	MVD802			---	---	---
D821	7694		MD821		R40H5975	---	---
D824	7625	MVD824		MMD824	---	---	---
D825	7697		MD825	MMD825	---	---	---
D826	7698		MD826		R4012283	---	---
D827	7699		MD827	MMD827	---	---	---
D859	7694		MD859	MMD859	---	---	---
D898			MD898	MMD898	---	R40H15087	---
D909	7788	MVD909		MMD909	---	---	---
D928	7829		MD928	MMD928	---	---	---
D949	7848		MD949	MMD949	---	---	---
D965	7864		MD965	MMD965	---	---	---
D974	7875 or		MD974	MMD974	---	---	---
D974	7881 or		MD974	MMD974	---	---	---
D974	7989		MD974	MMD974	---	---	---
D989	7891		MD989	MMD989	---	---	---
D1010	7914	MVD1010	MD1010	MMD1010	R4012072	---	---
D1032	7636		MD1032		---	---	---
D1064	7969	MVD1064	MD1064	MMD1064	---	---	---
D1066	7972	MVD1066	MD1066	MMD1066	---	---	---
D1067		MVD1067	MD1067	MMD1067	---	---	---
D1068		MVD1068	MD1068	MMD1068	---	---	---
D1069		MVD1069	MD1069	MMD1069	---	---	---
D1265				MMD1265	---	---	---

Note: FMSI 7636D1032 is the same as 7636D769. The lining did not change. While the backing plates are the same dimension, the D1032 plate includes a lug used to attach a squealer tab required by some OEMs. The existing Meritor KIT769 disc pads already meet this requirement.

- Disc Brake
  - We offer three levels of integrally molded non-asbestos disc pad friction material to best suit your requirements.
    - » MVDXXX - An economical semi-metallic friction material with good wear features
    - » MDXXX - Our standard pad semi-metallic material with carbon base additives that gives excellent service.
    - » MDXXXM - Our premium pad semi-metallic material with aramid fiber additives giving excellent service for severe applications.

HYDRAULIC DISC BRAKE PADS

HYDRAULIC DISC BRAKE PAD SETS:

SOLD IN SETS ONLY — 1 SET CONSISTS OF 2 OUTER PADS AND 2 INNER PADS

D50-O

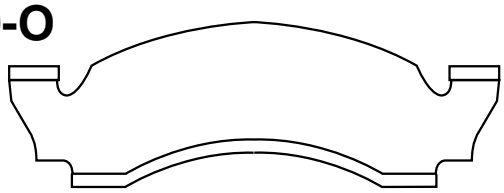

D50-I

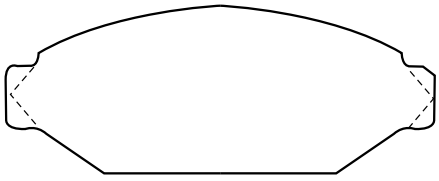

MERITOR SET NO.	FMSI OUTER PAD NO.	FMSI INNER PAD NO.	FMSI SET NO.	OUTER BACKING PLATE LENGTH	OUTER BACKING PLATE THICKNESS	INNER BACKING PLATE LENGTH	INNER BACKING PLATE THICKNESS
MD50 MVD50	D50-O	D50-I	788 7013A	7 13/64"	11/64"	6 7/32"	7/32"

D52-O

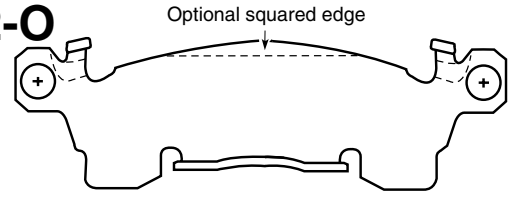

D52-I

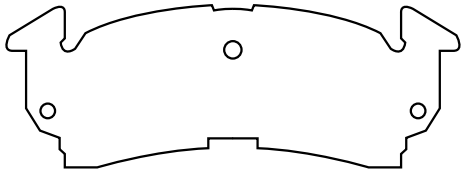

MERITOR SET NO.	FMSI OUTER PAD NO.	FMSI INNER PAD NO.	FMSI SET NO.	OUTER BACKING PLATE LENGTH	OUTER BACKING PLATE THICKNESS	INNER BACKING PLATE LENGTH	INNER BACKING PLATE THICKNESS
MD52 MD52M MVD52	D52-O	D52-I	728A 7214A	7 49/64"	9/64"	7 7/32"	9/64"

D86-O

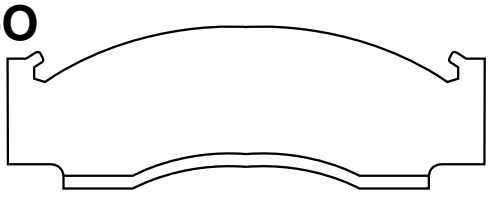

D86-I

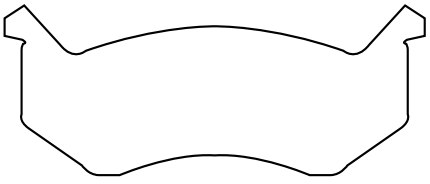

MERITOR SET NO.	FMSI OUTER PAD NO.	FMSI INNER PAD NO.	FMSI SET NO.	OUTER BACKING PLATE LENGTH	OUTER BACKING PLATE THICKNESS	INNER BACKING PLATE LENGTH	INNER BACKING PLATE THICKNESS
MD269	D86-O	D86-I	7019	6 63/64"	5/32"	5 15/16"	7/32"

D91-O

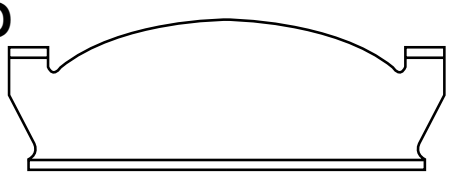

D91-I

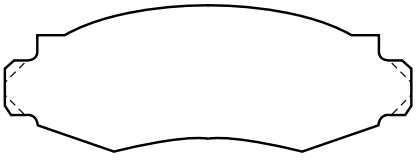

MERITOR SET NO.	FMSI OUTER PAD NO.	FMSI INNER PAD NO.	FMSI SET NO.	OUTER BACKING PLATE LENGTH	OUTER BACKING PLATE THICKNESS	INNER BACKING PLATE LENGTH	INNER BACKING PLATE THICKNESS
MD91 MVD91	D91-O	D91-I	7027A	6 19/64"	5/32"	5 7/8"	3/16"

HYDRAULIC DISC BRAKE PADS

D120

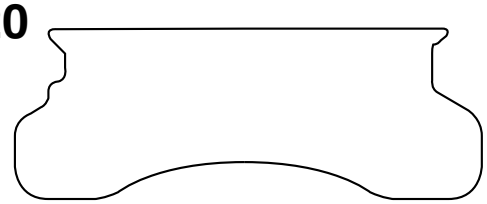

MERITOR SET NO.	FMSI PAD NO.	FMSI SET NO.	BACKING PLATE LENGTH	BACKING PLATE THICKNESS
MD120 MD120M MVD120	D120	7054	7 9/16"	7/32"

D122-O

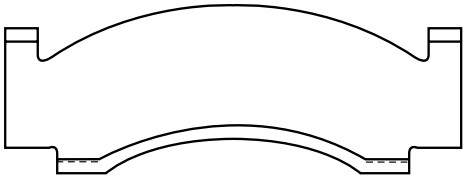

D122-I

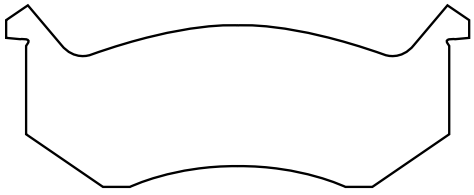

MERITOR SET NO.	FMSI OUTER PAD NO.	FMSI INNER PAD NO.	FMSI SET NO.	OUTER BACKING PLATE LENGTH	OUTER BACKING PLATE THICKNESS	INNER BACKING PLATE LENGTH	INNER BACKING PLATE THICKNESS
MD269	D122-O	D122-I	7019	6 63/64"	11/64"	5 5/16"	7/32"

D149-O

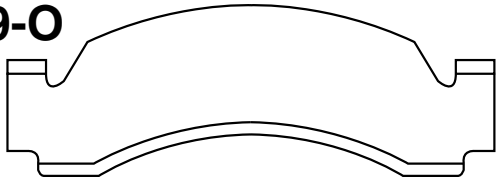

D149-I

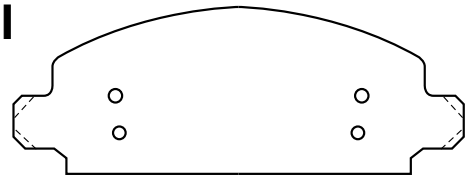

MERITOR SET NO.	FMSI OUTER PAD NO.	FMSI INNER PAD NO.	FMSI SET NO.	OUTER BACKING PLATE LENGTH	OUTER BACKING PLATE THICKNESS	INNER BACKING PLATE LENGTH	INNER BACKING PLATE THICKNESS
MD149 MD149M MVD149	D149-O	D149-I	7081A	8 1/8"	13/64"	7 13/64"	17/64"

D152-O

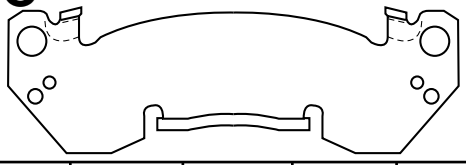

D152-I

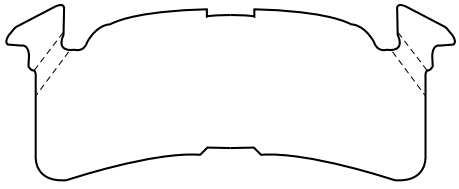

MERITOR SET NO.	FMSI OUTER PAD NO.	FMSI INNER PAD NO.	FMSI SET NO.	OUTER BACKING PLATE LENGTH	OUTER BACKING PLATE THICKNESS	INNER BACKING PLATE LENGTH	INNER BACKING PLATE THICKNESS
MD392	D152-O	D152-I	7084A	7 25/32"	1/8"	7 7/32"	7/32"

D154-O

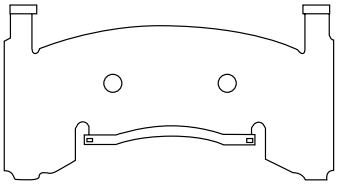

D154-I

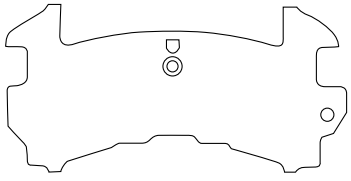

MERITOR SET NO.	FMSI OUTER PAD NO.	FMSI INNER PAD NO.	FMSI SET NO.	OUTER BACKING PLATE LENGTH	OUTER BACKING PLATE THICKNESS	INNER BACKING PLATE LENGTH	INNER BACKING PLATE THICKNESS
MD154M MD154M MVD154	D154-O	D154-I	7070A 7480 7480A	4 55/64"	1/8"	5 27/32"	3/16"

HYDRAULIC DISC BRAKE PADS

D171-O

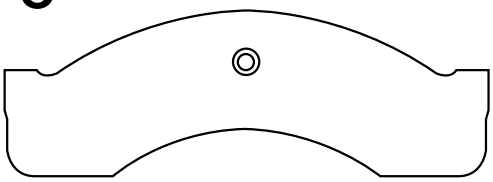

D171-I

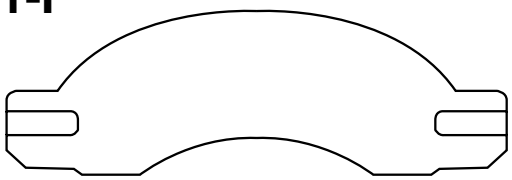

MERITOR SET NO.	FMSI OUTER PAD NO.	FMSI INNER PAD NO.	FMSI SET NO.	OUTER BACKING PLATE LENGTH	OUTER BACKING PLATE THICKNESS	INNER BACKING PLATE LENGTH	INNER BACKING PLATE THICKNESS
MD171 **MVD171**	D171-O	D171-I	7805	12 1/4"	19/64"	11 13/32"	19/64"

D184-O

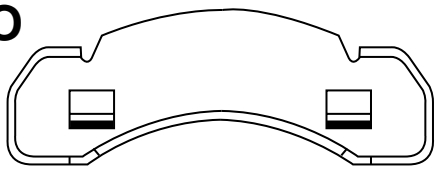

D184-I

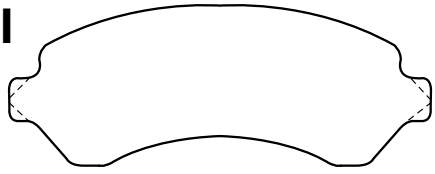

MERITOR SET NO.	FMSI OUTER PAD NO.	FMSI INNER PAD NO.	FMSI SET NO.	OUTER BACKING PLATE LENGTH	OUTER BACKING PLATE THICKNESS	INNER BACKING PLATE LENGTH	INNER BACKING PLATE THICKNESS
MD380	D184-O	D184-I	7806	10 1/16"	13/64"	8 5/64"	17/64"

D202-O

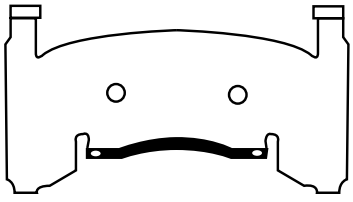

D202-I

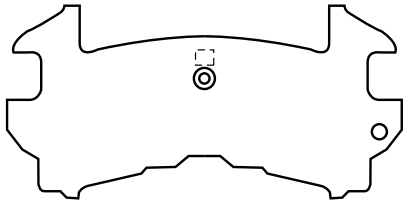

MERITOR SET NO.	FMSI OUTER PAD NO.	FMSI INNER PAD NO.	FMSI SET NO.	OUTER BACKING PLATE LENGTH	OUTER BACKING PLATE THICKNESS	INNER BACKING PLATE LENGTH	INNER BACKING PLATE THICKNESS
MD154	D202-O	D202-I	7480A	4 55/64"	1/8"	5 55/64"	3/16"

D215-O

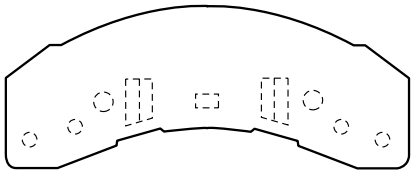

D215-I

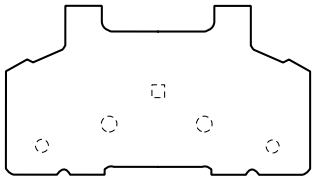

MERITOR SET NO.	FMSI OUTER PAD NO.	FMSI INNER PAD NO.	FMSI SET NO.	OUTER BACKING PLATE LENGTH	OUTER BACKING PLATE THICKNESS	INNER BACKING PLATE LENGTH	INNER BACKING PLATE THICKNESS
MD215 **MVD215**	D215-O	D215-I	7136	5 51/64"	1/8"	4 59/64"	3/16"

D224

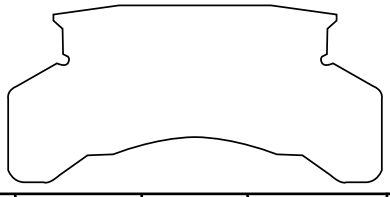

MERITOR SET NO.	FMSI PAD NO.	FMSI SET NO.	BACKING PLATE LENGTH	BACKING PLATE THICKNESS
MD224 **MD224M** **MVD224**	D224 (4 per Set)	7141 7807	8 13/32"	1/4"

HYDRAULIC DISC BRAKE PADS

D225-O

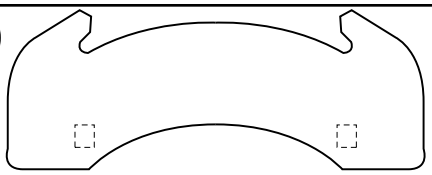

D225-I

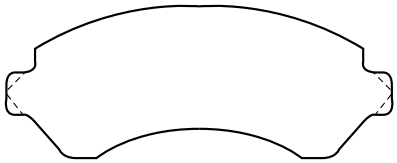

MERITOR SET NO.	FMSI OUTER PAD NO.	FMSI INNER PAD NO.	FMSI SET NO.	OUTER BACKING PLATE LENGTH	OUTER BACKING PLATE THICKNESS	INNER BACKING PLATE LENGTH	INNER BACKING PLATE THICKNESS
MD225 **MD225M** **MVD225**	D225-O	D225-I	7142 7808 7818	10 5/8"	7/32"	8 5/64"	17/64"

D236

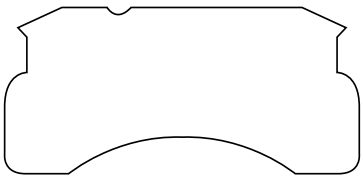

MERITOR SET NO.	FMSI PAD NO.	FMSI SET NO.	BACKING PLATE LENGTH	BACKING PLATE THICKNESS
MD236 **MD236M** **MVD236**	D236 (4 per Set)	7149 7809	9"	1/4"

D249-O

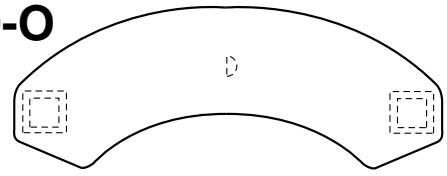

D249-I

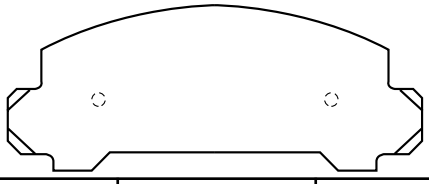

MERITOR SET NO.	FMSI OUTER PAD NO.	FMSI INNER PAD NO.	FMSI SET NO.	OUTER BACKING PLATE LENGTH	OUTER BACKING PLATE THICKNESS	INNER BACKING PLATE LENGTH	INNER BACKING PLATE THICKNESS
MD387	D249-O	D249-I	7125	6 49/64"	13/64"	6 19/64"	13/64"

D259-O

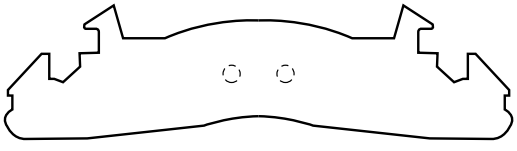

D259-I

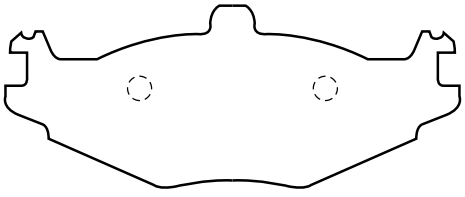

MERITOR SET NO.	FMSI OUTER PAD NO.	FMSI INNER PAD NO.	FMSI SET NO.	OUTER BACKING PLATE LENGTH	OUTER BACKING PLATE THICKNESS	INNER BACKING PLATE LENGTH	INNER BACKING PLATE THICKNESS
MD259 **MVD259**	D259-O	D259-I	7164	8 47/64"	1/4"	6 9/64"	1/4"

D269-O

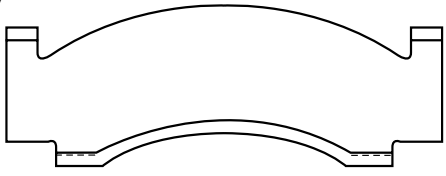

D269-I

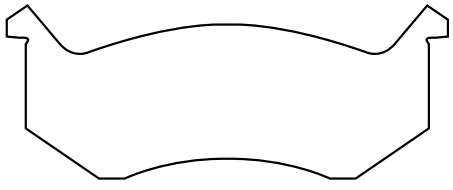

MERITOR SET NO.	FMSI OUTER PAD NO.	FMSI INNER PAD NO.	FMSI SET NO.	OUTER BACKING PLATE LENGTH	OUTER BACKING PLATE THICKNESS	INNER BACKING PLATE LENGTH	INNER BACKING PLATE THICKNESS
MD269 **MD269M** **MVD269**	D269-O	D269-I	7179A 7179	6 63/64"	11/64"	5 15/16"	7/32"

HYDRAULIC DISC BRAKE PADS

D326-O

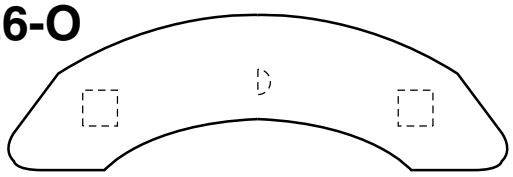

D326-I

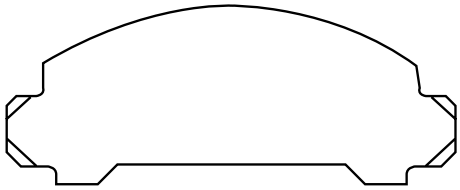

MERITOR SET NO.	FMSI OUTER PAD NO.	FMSI INNER PAD NO.	FMSI SET NO.	OUTER BACKING PLATE LENGTH	OUTER BACKING PLATE THICKNESS	INNER BACKING PLATE LENGTH	INNER BACKING PLATE THICKNESS
MD326 MVD326	D326-O	D326-I	7224	6 49/64"	13/64"	6 19/64"	13/64"

D327

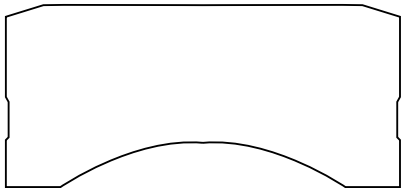

MERITOR SET NO.	FMSI PAD NO.	FMSI SET NO.	BACKING PLATE LENGTH	BACKING PLATE THICKNESS
MD379	D327	7812	8 15/64"	15/64"

D344-O

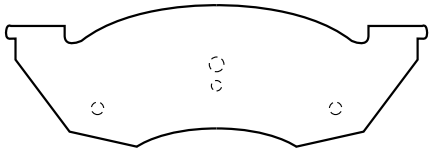

D344-I

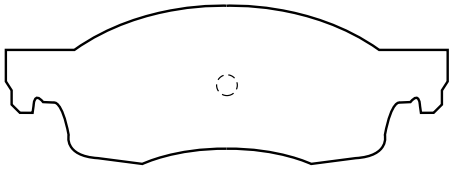

MERITOR SET NO.	FMSI OUTER PAD NO.	FMSI INNER PAD NO.	FMSI SET NO.	OUTER BACKING PLATE LENGTH	OUTER BACKING PLATE THICKNESS	INNER BACKING PLATE LENGTH	INNER BACKING PLATE THICKNESS
MD344 MVD344	D344A-O	D344A-I	7237A	6 7/16"	13/64"	6 13/32"	7/32"

D360-O

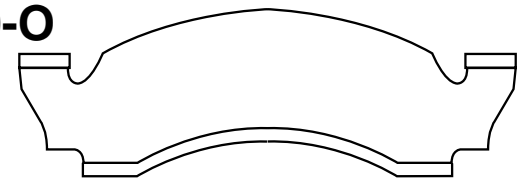

D360-I

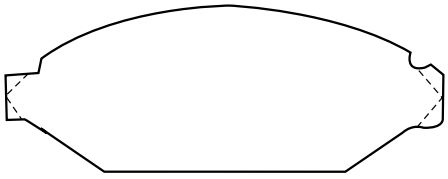

MERITOR SET NO.	FMSI OUTER PAD NO.	FMSI INNER PAD NO.	FMSI SET NO.	OUTER BACKING PLATE LENGTH	OUTER BACKING PLATE THICKNESS	INNER BACKING PLATE LENGTH	INNER BACKING PLATE THICKNESS
MD360	D360-O	D360-I	788	7 13/64"	11/64	6 13/64"	7/32"

D368-O

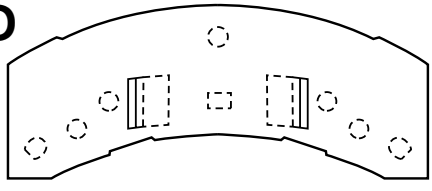

D368-I

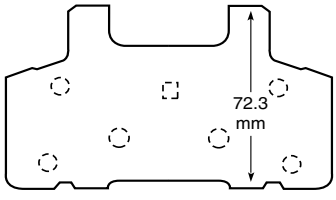

MERITOR SET NO.	FMSI OUTER PAD NO.	FMSI INNER PAD NO.	FMSI SET NO.	OUTER BACKING PLATE LENGTH	OUTER BACKING PLATE THICKNESS	INNER BACKING PLATE LENGTH	INNER BACKING PLATE THICKNESS
MD368 MVD368	D368-O	D368-I	7259	5 51/64"	3/16"	4 59/64"	3/16"

HYDRAULIC DISC BRAKE PADS

D369-O

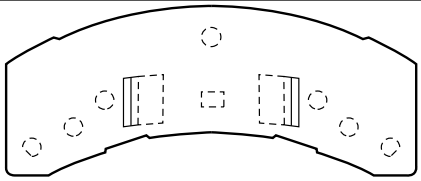

D369-I

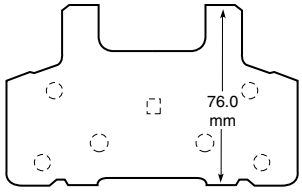

MERITOR SET NO.	FMSI OUTER PAD NO.	FMSI INNER PAD NO.	FMSI SET NO.	OUTER BACKING PLATE LENGTH	OUTER BACKING PLATE THICKNESS	INNER BACKING PLATE LENGTH	INNER BACKING PLATE THICKNESS
MD369 **MD369M** **MVD369**	D369-O	D369-I	7259	5 51/64"	3/16"	4 59/64"	3/16"

D370-O

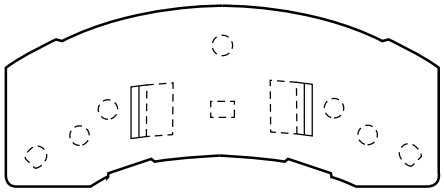

D370-I

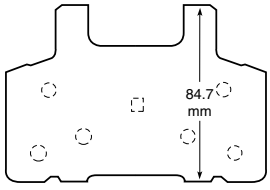

MERITOR SET NO.	FMSI OUTER PAD NO.	FMSI INNER PAD NO.	FMSI SET NO.	OUTER BACKING PLATE LENGTH	OUTER BACKING PLATE THICKNESS	INNER BACKING PLATE LENGTH	INNER BACKING PLATE THICKNESS
MD370 **MD370M** **MVD370**	D370-O	D370-I	7260 7260D	5 51/64"	3/16"	4 59/64"	7/32"

D375-O

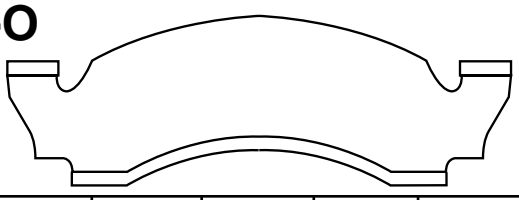

D375-I

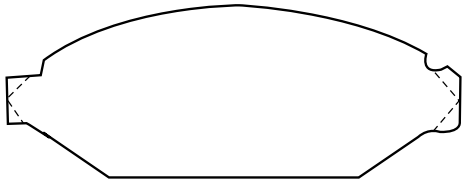

MERITOR SET NO.	FMSI OUTER PAD NO.	FMSI INNER PAD NO.	FMSI SET NO.	OUTER BACKING PLATE LENGTH	OUTER BACKING PLATE THICKNESS	INNER BACKING PLATE LENGTH	INNER BACKING PLATE THICKNESS
MD375 **MD375M** **MVD376**	D375-O	D375-I	7264 7361	7 13/64"	11/64"	6 13/64"	7/32"

D376-O

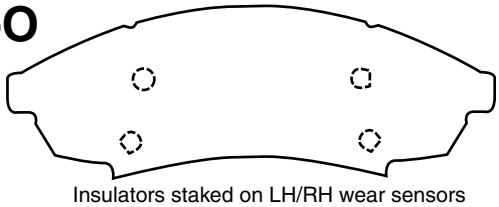

Insulators staked on LH/RH wear sensors

D376-I

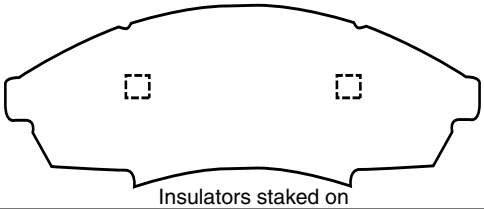

Insulators staked on

MERITOR SET NO.	FMSI OUTER PAD NO.	FMSI INNER PAD NO.	FMSI SET NO.	OUTER BACKING PLATE LENGTH	OUTER BACKING PLATE THICKNESS	INNER BACKING PLATE LENGTH	INNER BACKING PLATE THICKNESS
MD376	D376-O	D376-I	7265	5 33/64"	3/16"	5 33/64"	3/16"

D379

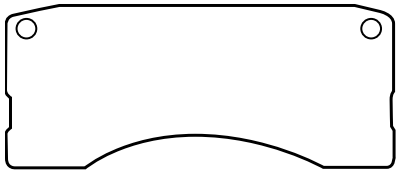

MERITOR SET NO.	FMSI PAD NO.	FMSI SET NO.	BACKING PLATE LENGTH	BACKING PLATE THICKNESS
MD379 **MD379M** **MVD379**	D379	7812 7814	8 15/64"	15/64"

HYDRAULIC DISC BRAKE PADS

D380-O

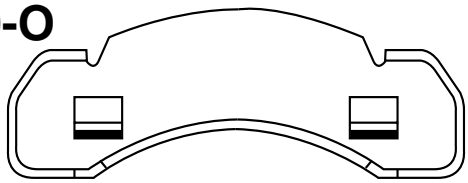

D380-I

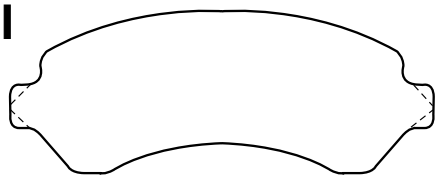

MERITOR SET NO.	FMSI OUTER PAD NO.	FMSI INNER PAD NO.	FMSI SET NO.	OUTER BACKING PLATE LENGTH	OUTER BACKING PLATE THICKNESS	INNER BACKING PLATE LENGTH	INNER BACKING PLATE THICKNESS
MD380 MD380M MVD380	D380-O	D380-I	7815	10 1/16"	13/64"	8 5/64"	17/64"

D387-O

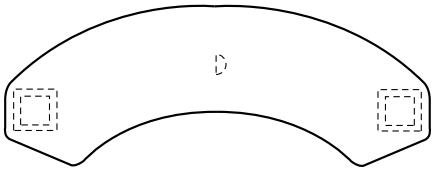

D387-I

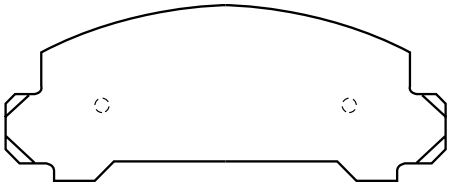

MERITOR SET NO.	FMSI OUTER PAD NO.	FMSI INNER PAD NO.	FMSI SET NO.	OUTER BACKING PLATE LENGTH	OUTER BACKING PLATE THICKNESS	INNER BACKING PLATE LENGTH	INNER BACKING PLATE THICKNESS
MD387 MVD387	D387-O	D387-I	7125	6 49/64"	13/64"	6 19/64"	13/64"

D392-O

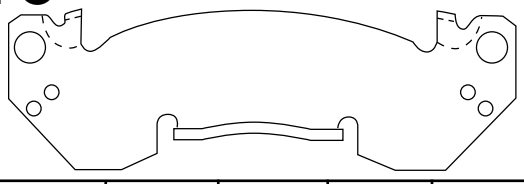

D392-I

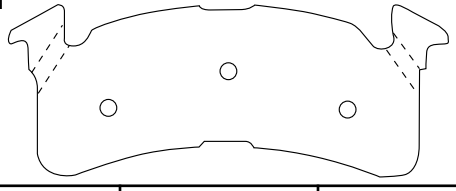

MERITOR SET NO.	FMSI OUTER PAD NO.	FMSI INNER PAD NO.	FMSI SET NO.	OUTER BACKING PLATE LENGTH	OUTER BACKING PLATE THICKNESS	INNER BACKING PLATE LENGTH	INNER BACKING PLATE THICKNESS
MD392 MVD392	D392-O	D392-I	7280	7 49/64"	3 19/64"	7 7/32"	7/32"

D411-O

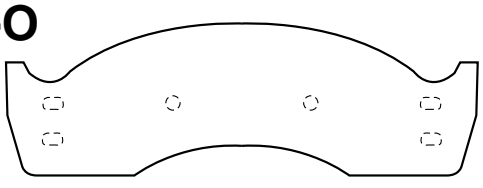

D411-I

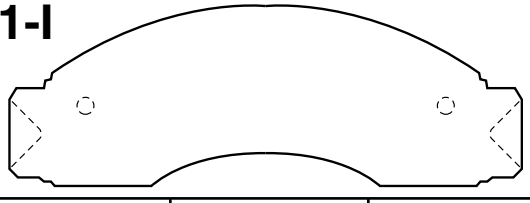

MERITOR SET NO.	FMSI OUTER PAD NO.	FMSI INNER PAD NO.	FMSI SET NO.	OUTER BACKING PLATE LENGTH	OUTER BACKING PLATE THICKNESS	INNER BACKING PLATE LENGTH	INNER BACKING PLATE THICKNESS
MD411	D411-O	D411-I	7299	9 17/64"	7/32"	8 21/32"	7/32"

D414

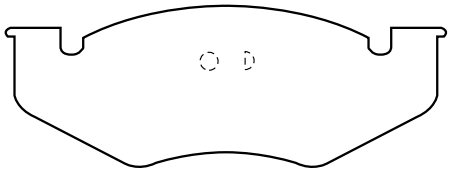

MERITOR SET NO.	FMSI PAD NO.	FMSI SET NO.	BACKING PLATE LENGTH	BACKING PLATE THICKNESS
MD416	D414	7302	6 1/2"	13/64"

D416

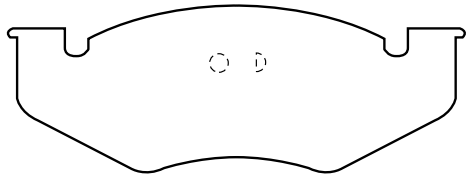

MERITOR SET NO.	FMSI PAD NO.	FMSI SET NO.	BACKING PLATE LENGTH	BACKING PLATE THICKNESS
MD416 MVD416	D416	7258A	6 1/2"	13/64"

HYDRAULIC DISC BRAKE PADS

D433

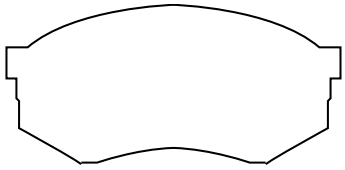

MERITOR SET NO.	FMSI PAD NO.	FMSI SET NO.	BACKING PLATE LENGTH	BACKING PLATE THICKNESS
MD433 MVD433	D433	7500	4 9/16"	7/32"

D442

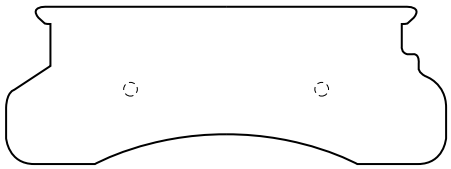

MERITOR SET NO.	FMSI PAD NO.	FMSI SET NO.	BACKING PLATE LENGTH	BACKING PLATE THICKNESS
MD442	D432	7816	6 29/32"	15/64"

D450

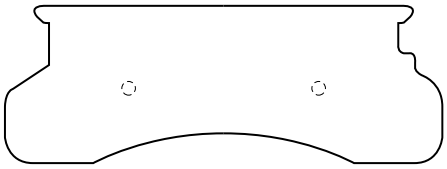

MERITOR SET NO.	FMSI PAD NO.	FMSI SET NO.	BACKING PLATE LENGTH	BACKING PLATE THICKNESS
MD450 MD450M MVD450	D450	7330	7 9/16"	13/64"

D459-O

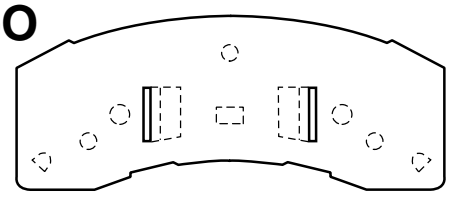

D459-I

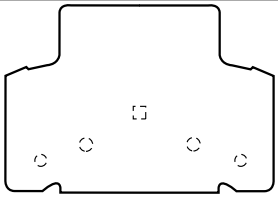

MERITOR SET NO.	FMSI OUTER PAD NO.	FMSI INNER PAD NO.	FMSI SET NO.	OUTER BACKING PLATE LENGTH	OUTER BACKING PLATE THICKNESS	INNER BACKING PLATE LENGTH	INNER BACKING PLATE THICKNESS
MD459 MD459M MVD459	D459-O	D459-I	7339	5 51/64"	15/64"	4 29/32"	7/32"

D477-O

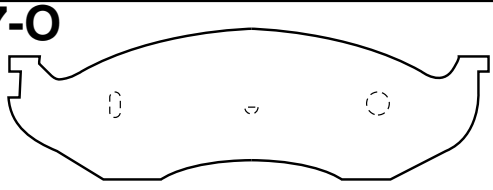

D477-I

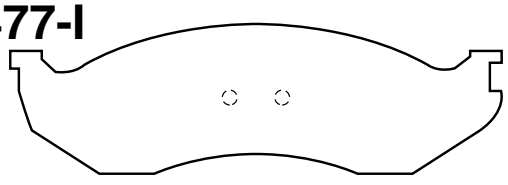

MERITOR SET NO.	FMSI OUTER PAD NO.	FMSI INNER PAD NO.	FMSI SET NO.	OUTER BACKING PLATE LENGTH	OUTER BACKING PLATE THICKNESS	INNER BACKING PLATE LENGTH	INNER BACKING PLATE THICKNESS
MD477 MD477M MVD477	D477-O	D477-I	7507A	6 31/32"	13/64"	3 31/32"	13/64"

D494

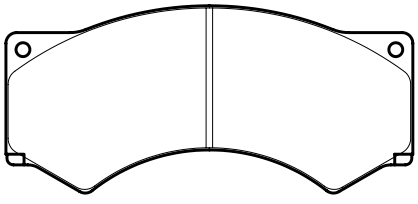

MERITOR SET NO.	FMSI PAD NO.	FMSI SET NO.	BACKING PLATE LENGTH	BACKING PLATE THICKNESS
MD494 MVD494	D494	7817	7 33/64"	3/16"

HYDRAULIC DISC BRAKE PADS

D505-O

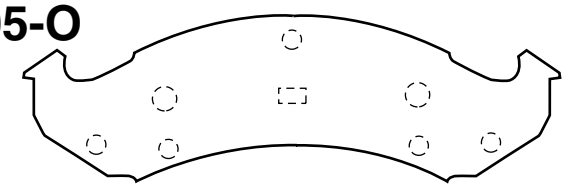

D505-I

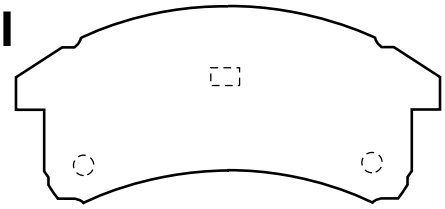

MERITOR SET NO.	FMSI OUTER PAD NO.	FMSI INNER PAD NO.	FMSI SET NO.	OUTER BACKING PLATE LENGTH	OUTER BACKING PLATE THICKNESS	INNER BACKING PLATE LENGTH	INNER BACKING PLATE THICKNESS
MD505	D505-O	D505-I	7384	8 3/8"	3/16"	5 13/16"	3/16"

D521-O

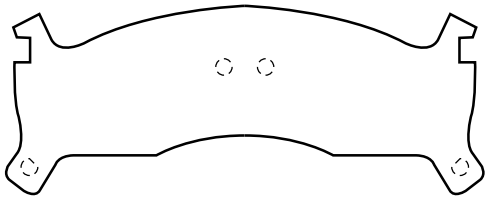

D521-I

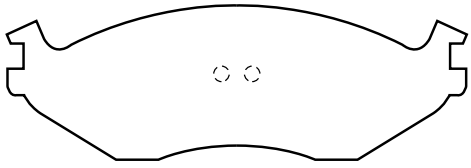

MERITOR SET NO.	FMSI OUTER PAD NO.	FMSI INNER PAD NO.	FMSI SET NO.	OUTER BACKING PLATE LENGTH	OUTER BACKING PLATE THICKNESS	INNER BACKING PLATE LENGTH	INNER BACKING PLATE THICKNESS
MD521 **MVD521**	D521-O	D521-I	7403 7403A	6 51/64"	3/16"	6 1/2"	13/64"

D522-O

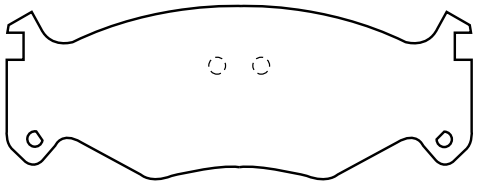

D522-I

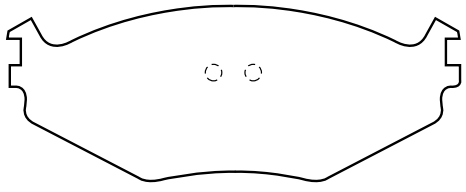

MERITOR SET NO.	FMSI OUTER PAD NO.	FMSI INNER PAD NO.	FMSI SET NO.	OUTER BACKING PLATE LENGTH	OUTER BACKING PLATE THICKNESS	INNER BACKING PLATE LENGTH	INNER BACKING PLATE THICKNESS
MD522 **MVD522**	D522-O	D522-I	7404A	6 1/2"	3/16"	6 1/2"	13/64"

D524-O

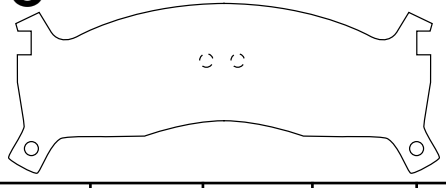

D524-I

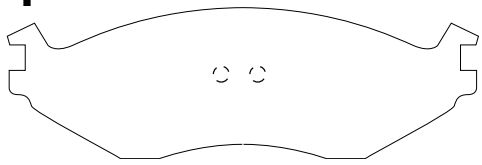

MERITOR SET NO.	FMSI OUTER PAD NO.	FMSI INNER PAD NO.	FMSI SET NO.	OUTER BACKING PLATE LENGTH	OUTER BACKING PLATE THICKNESS	INNER BACKING PLATE LENGTH	INNER BACKING PLATE THICKNESS
MD524 **MVD524**	D524-O	D524-I	7406	6 51/64"	3/16"	6 1/2"	13/64"

D529

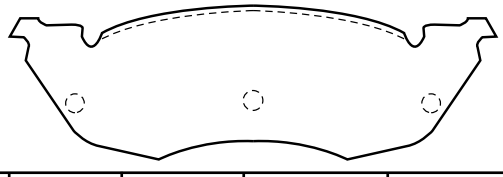

MERITOR SET NO.	FMSI PAD NO.	FMSI SET NO.	BACKING PLATE LENGTH	BACKING PLATE THICKNESS
MD529 **MVD529**	D529	7410	6 63/64"	7/32"

HYDRAULIC DISC BRAKE PADS

D542-O

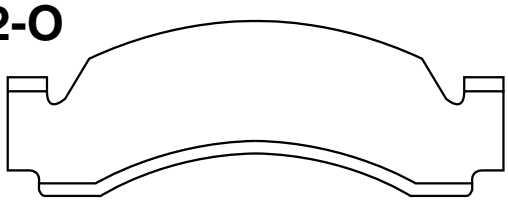

D542-I

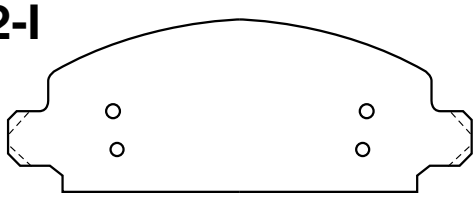

MERITOR SET NO.	FMSI OUTER PAD NO.	FMSI INNER PAD NO.	FMSI SET NO.	OUTER BACKING PLATE LENGTH	OUTER BACKING PLATE THICKNESS	INNER BACKING PLATE LENGTH	INNER BACKING PLATE THICKNESS
MD149	D542-O	D542-I	7081	8 1/8"	3/16"	7 13/64"	17/64"

D546-O

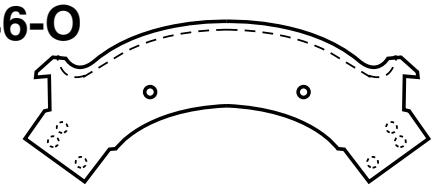

D546-I

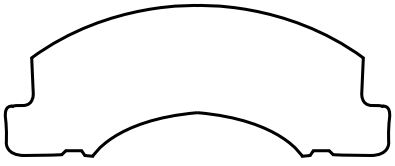

MERITOR SET NO.	FMSI OUTER PAD NO.	FMSI INNER PAD NO.	FMSI SET NO.	OUTER BACKING PLATE LENGTH	OUTER BACKING PLATE THICKNESS	INNER BACKING PLATE LENGTH	INNER BACKING PLATE THICKNESS
MD675	D546-O	D546-1	7425	9 3/8"	5/16"	7 7/32"	5/16"

D557

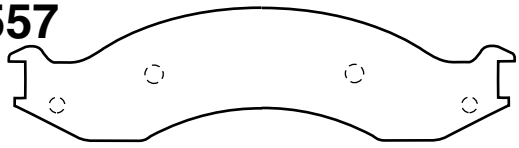

All shoes have lugs on ends for staked on insulator.
Outer shoes have middle 2 lugs for clip attachment.

MERITOR SET NO.	FMSI PAD NO.	FMSI SET NO.	BACKING PLATE LENGTH	BACKING PLATE THICKNESS
MD557 MD557M MVD557	D557	7436	9 3/8"	13/64"

D591-O

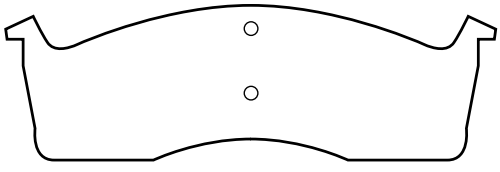

D591-I

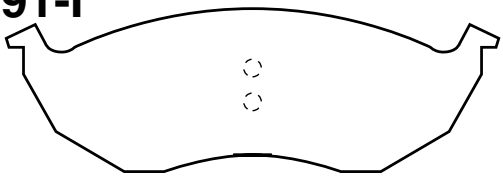

MERITOR SET NO.	FMSI OUTER PAD NO.	FMSI INNER PAD NO.	FMSI SET NO.	OUTER BACKING PLATE LENGTH	OUTER BACKING PLATE THICKNESS	INNER BACKING PLATE LENGTH	INNER BACKING PLATE THICKNESS
MD591 MVD591	D591-O	D591-I	7470A	6 1/2"	3/16"	6 1/2"	13/64"

D593

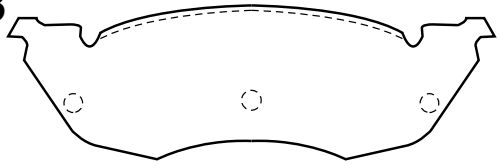

MERITOR SET NO.	FMSI PAD NO.	FMSI SET NO.	BACKING PLATE LENGTH	BACKING PLATE THICKNESS
MD592	D593	7410A	6 63/64"	7/32"

D601

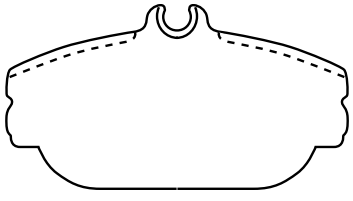

MERITOR SET NO.	FMSI PAD NO.	FMSI SET NO.	BACKING PLATE LENGTH	BACKING PLATE THICKNESS
MD601 MVD601	D601	7479	4 7/8"	17/64"

HYDRAULIC DISC BRAKE PADS

D607-O

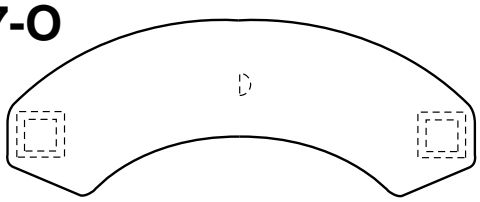

D607-I

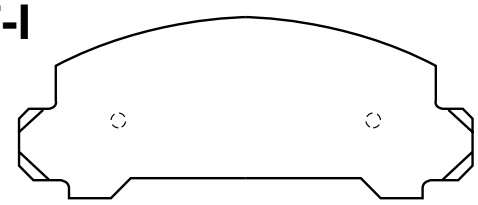

MERITOR SET NO.	FMSI OUTER PAD NO.	FMSI INNER PAD NO.	FMSI SET NO.	OUTER BACKING PLATE LENGTH	OUTER BACKING PLATE THICKNESS	INNER BACKING PLATE LENGTH	INNER BACKING PLATE THICKNESS
MD387	D607-O	D607-I	7488	6 49/64"	13/64"	6 19/64"	13/64"

D624

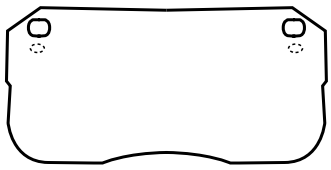

MERITOR SET NO.	FMSI PAD NO.	FMSI SET NO.	BACKING PLATE LENGTH	BACKING PLATE THICKNESS
MD624 MVD624	D624	7499	5 29/32"	7/32"

D626-O

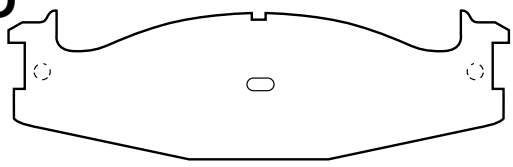

D626-I

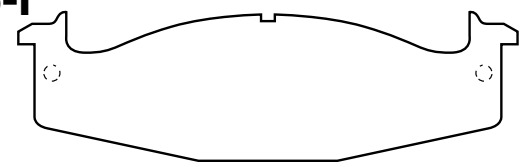

MERITOR SET NO.	FMSI OUTER PAD NO.	FMSI INNER PAD NO.	FMSI SET NO.	OUTER BACKING PLATE LENGTH	OUTER BACKING PLATE THICKNESS	INNER BACKING PLATE LENGTH	INNER BACKING PLATE THICKNESS
MD626	D626-O	D626-1	7503	7 41/64"	1/4"	7 41/64"	1/4"

D632-O

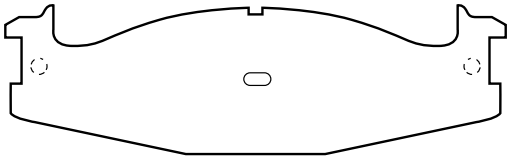

D632-I

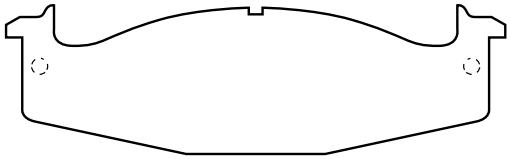

MERITOR SET NO.	FMSI OUTER PAD NO.	FMSI INNER PAD NO.	FMSI SET NO.	OUTER BACKING PLATE LENGTH	OUTER BACKING PLATE THICKNESS	INNER BACKING PLATE LENGTH	INNER BACKING PLATE THICKNESS
MD632 MVD632	D632-O	D632-I	7503	7 41/64"	1/4"	7 41/64"	1/4"

D642-O

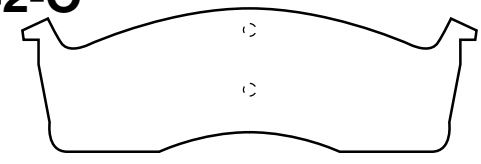

D642-I

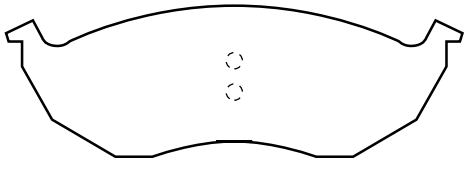

MERITOR SET NO.	FMSI OUTER PAD NO.	FMSI INNER PAD NO.	FMSI SET NO.	OUTER BACKING PLATE LENGTH	OUTER BACKING PLATE THICKNESS	INNER BACKING PLATE LENGTH	INNER BACKING PLATE THICKNESS
MD591	D642-O	D642-I	7470A	6 1/2"	3/16"	6 1/2"	13/64"

HYDRAULIC DISC BRAKE PADS

D646

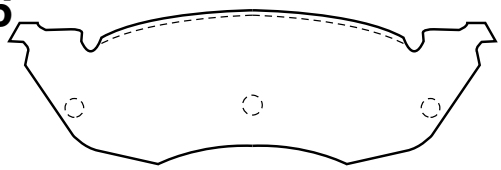

MERITOR SET NO.	FMSI PAD NO.	FMSI SET NO.	BACKING PLATE LENGTH	BACKING PLATE THICKNESS
MD646 MVD646	D646	7527	6 31/32"	1/4"

D652

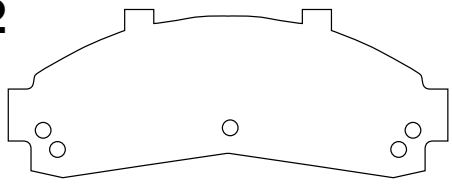

MERITOR SET NO.	FMSI PAD NO.	FMSI SET NO.	BACKING PLATE LENGTH	BACKING PLATE THICKNESS
MD652 MVD652	D652	7532	6 1/16"	1/4"

D654-O

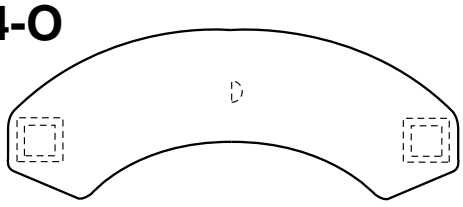

D654-I

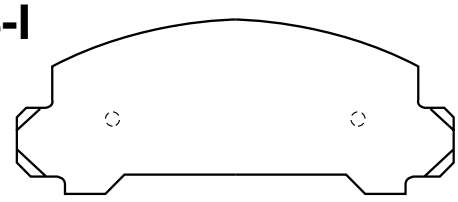

MERITOR SET NO.	FMSI OUTER PAD NO.	FMSI INNER PAD NO.	FMSI SET NO.	OUTER BACKING PLATE LENGTH	OUTER BACKING PLATE THICKNESS	INNER BACKING PLATE LENGTH	INNER BACKING PLATE THICKNESS
MD387	D654-O	D654-I	7534A	6 49/64"	13/16"	6 5/16"	13/16"

D655

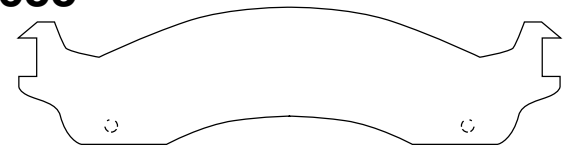

MERITOR SET NO.	FMSI PAD NO.	FMSI SET NO.	BACKING PLATE LENGTH	BACKING PLATE THICKNESS
MD655 MD655M MVD655	D655	7535	8 43/64"	1/4"

D656

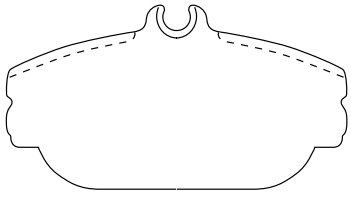

MERITOR SET NO.	FMSI PAD NO.	FMSI SET NO.	BACKING PLATE LENGTH	BACKING PLATE THICKNESS
MD601	D656	7536	4 7/8"	17/64"

D675-O

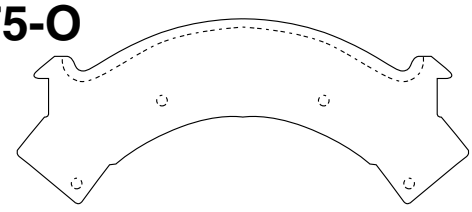

D675-I

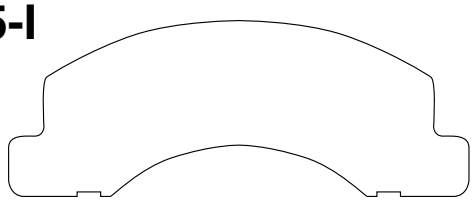

MERITOR SET NO.	FMSI OUTER PAD NO.	FMSI INNER PAD NO.	FMSI SET NO.	OUTER BACKING PLATE LENGTH	OUTER BACKING PLATE THICKNESS	INNER BACKING PLATE LENGTH	INNER BACKING PLATE THICKNESS
MD675 MVD675	D675-O	D675-I	7425	9 3/8"	5/16"	7 7/32"	5/16"

D679

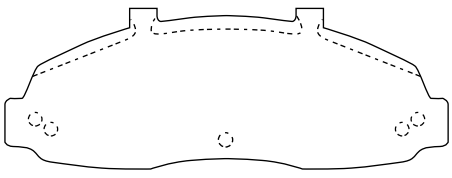

MERITOR SET NO.	FMSI PAD NO.	FMSI SET NO.	BACKING PLATE LENGTH	BACKING PLATE THICKNESS
MD679 MVD679	D679	7558	6 35/64"	15/64"

D702

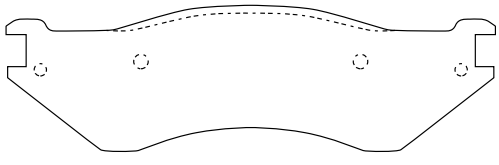

MERITOR SET NO.	FMSI PAD NO.	FMSI SET NO.	BACKING PLATE LENGTH	BACKING PLATE THICKNESS
MD702 MVD702	D702	7576	7 27/64"	15/64"

HYDRAULIC DISC BRAKE PADS

D711

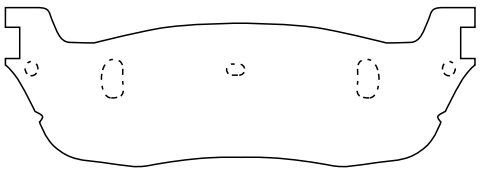

MERITOR SET NO.	FMSI PAD NO.	FMSI SET NO.	BACKING PLATE LENGTH	BACKING PLATE THICKNESS
MD711 MVD711	D711	7584	5 39/64"	13/64"

D715

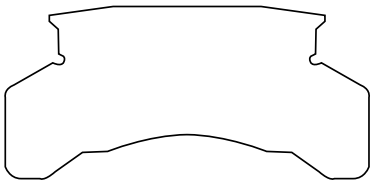

EUCLID SET NO.	FMSI PAD NO.	FMSI SET NO.	BACKING PLATE LENGTH	BACKING PLATE THICKNESS
MD715	D715	7141 7807	8 25/64"	1/4"

D716-O

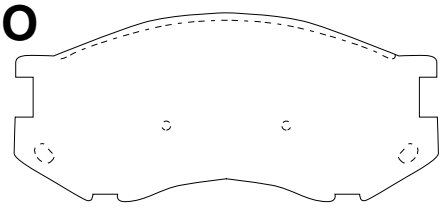

D716-I

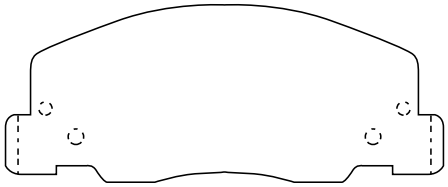

MERITOR SET NO.	FMSI OUTER PAD NO.	FMSI INNER PAD NO.	FMSI SET NO.	OUTER BACKING PLATE LENGTH	OUTER BACKING PLATE THICKNESS	INNER BACKING PLATE LENGTH	INNER BACKING PLATE THICKNESS
MD716 MVD716	D716-O	D716-I	7587	5"	7/32"	5 3/64"	7/32"

D717-O

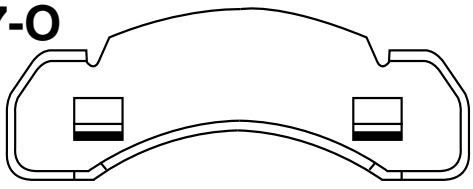

D717-I

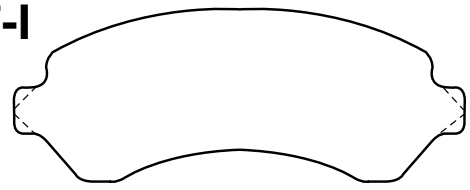

MERITOR SET NO.	FMSI OUTER PAD NO.	FMSI INNER PAD NO.	FMSI SET NO.	OUTER BACKING PLATE LENGTH	OUTER BACKING PLATE THICKNESS	INNER BACKING PLATE LENGTH	INNER BACKING PLATE THICKNESS
MD380	D717-O	D717-I	7815	10 1/16"	3/16"	8 1/16"	17/64"

D726

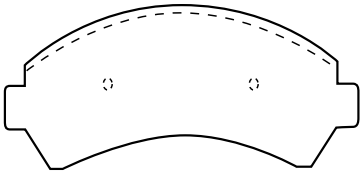

Metal composition insulators 0.8 (.031) thick staked-on

MERITOR SET NO.	FMSI PAD NO.	FMSI SET NO.	BACKING PLATE LENGTH	BACKING PLATE THICKNESS
MD726	D726	7593	6 9/16"	3/16"

D729

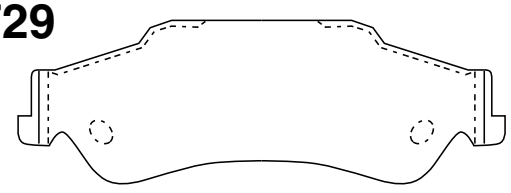

MERITOR SET NO.	FMSI PAD NO.	FMSI SET NO.	BACKING PLATE LENGTH	BACKING PLATE THICKNESS
MD729 MVD729	D729	7596	5 5/8"	15/64"

D734

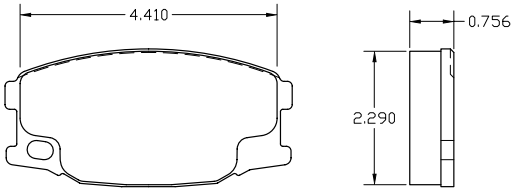

Eight piece set. One shoe as shown, one shoe mirror image six shoes with no holes.

MERITOR SET NO.	FMSI PAD NO.	FMSI SET NO.	BACKING PLATE LENGTH	BACKING PLATE THICKNESS
MD734	D734	7603	4 15/16"	7/32"

HYDRAULIC DISC BRAKE PADS

D735-O

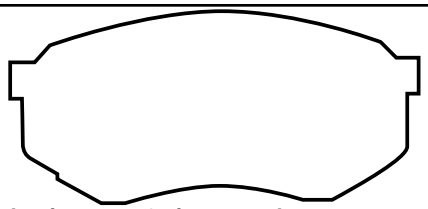

Eight piece set. 6 pieces as shown

D735-I

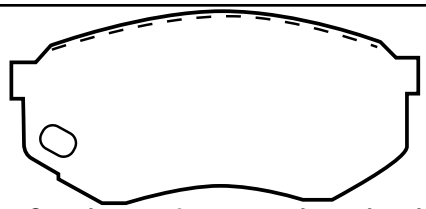

Eight piece set. One piece as shown, one piece mirror image

MERITOR SET NO.	FMSI OUTER PAD NO.	FMSI INNER PAD NO.	FMSI SET NO.	OUTER BACKING PLATE LENGTH	OUTER BACKING PLATE THICKNESS	INNER BACKING PLATE LENGTH	INNER BACKING PLATE THICKNESS
MD735	D735-O	D735-I	7604	4 9/16"	7/32"	4 9/16"	7/32"

D746-O

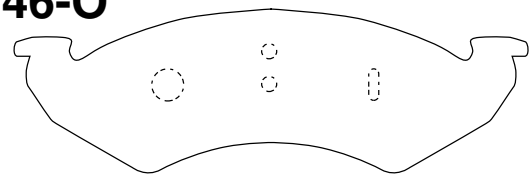

D746-I

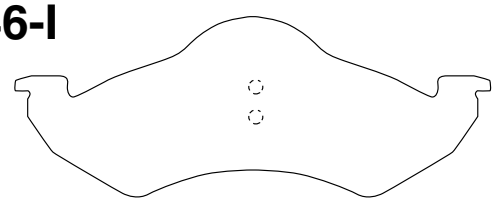

MERITOR SET NO.	FMSI OUTER PAD NO.	FMSI INNER PAD NO.	FMSI SET NO.	OUTER BACKING PLATE LENGTH	OUTER BACKING PLATE THICKNESS	INNER BACKING PLATE LENGTH	INNER BACKING PLATE THICKNESS
MD746 MVD746	D746-O	D746-I	7616	7 9/16"	15/64"	7 9/16"	15/64"

D756

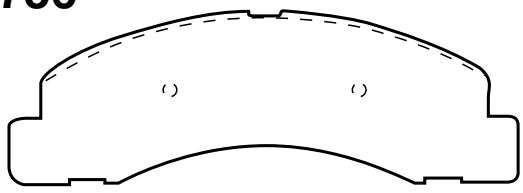

D757

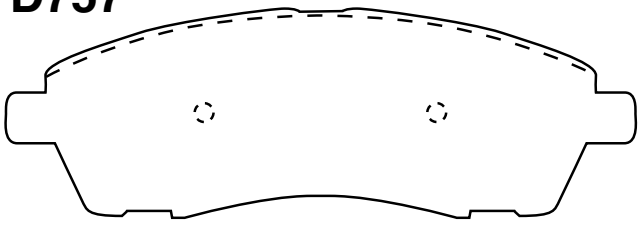

MERITOR SET NO.	FMSI PAD NO.	FMSI SET NO.	BACKING PLATE LENGTH	BACKING PLATE THICKNESS
MD756 MVD756	D7625	7625	7 39/64"	1/4"

MERITOR SET NO.	FMSI PAD NO.	FMSI SET NO.	BACKING PLATE LENGTH	BACKING PLATE THICKNESS
MD757 MVD757	D7626	7626	6 1/4"	1/4"

D758

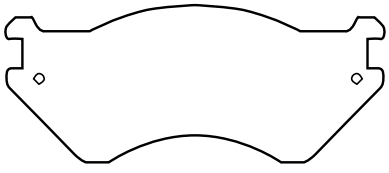

D769

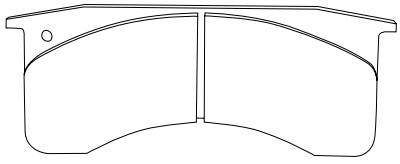

MERITOR SET NO.	FMSI PAD NO.	FMSI SET NO.	BACKING PLATE LENGTH	BACKING PLATE THICKNESS
MD756 MVD756	D758	7627	7 27/64"	1/4"

MERITOR SET NO.	FMSI PAD NO.	FMSI SET NO.	BACKING PLATE LENGTH	BACKING PLATE THICKNESS
KIT769AM MD769M MVD769	D1032	7636	9 29/64"	1/4"

HYDRAULIC DISC BRAKE PADS

D777

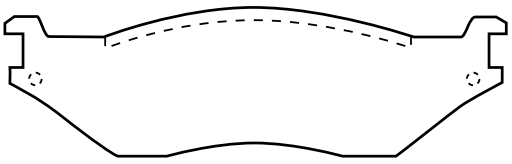

MERITOR SET NO.	FMSI PAD NO.	FMSI SET NO.	BACKING PLATE LENGTH	BACKING PLATE THICKNESS
MD777 MD777M MVD777	D777	7644	8 3/4"	1/4"

D784

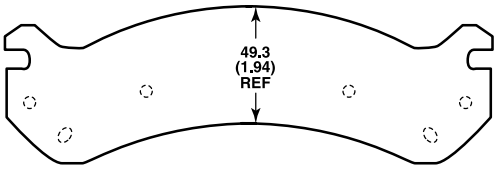

Metal composite shim 0.9 (.035) thick
Two shoes have two sensors staked-on
Two shoes have one sensors (LH,RH) staked on

MERITOR SET NO.	FMSI PAD NO.	FMSI SET NO.	BACKING PLATE LENGTH	BACKING PLATE THICKNESS
MD784 MVD784	D784	7652	8 1/2"	1/4"

D785

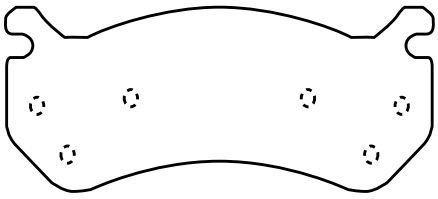

Two shoes have two sensors staked-on
Two shoes have one sensors (LH,RH) staked-on
Metal composite shim 0.9 (.035) thick

MERITOR SET NO.	FMSI PAD NO.	FMSI SET NO.	BACKING PLATE LENGTH	BACKING PLATE THICKNESS
MVD785	D785	7653	6 31/32"	15/64"

D786-O

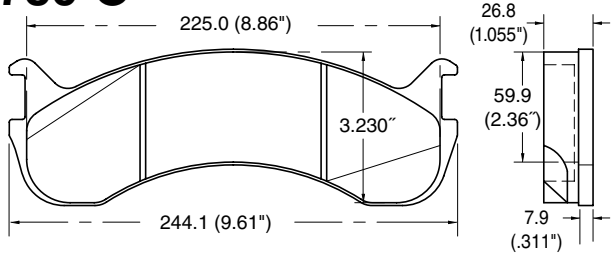

MERITOR SET NO.	FMSI PAD NO.	FMSI SET NO.	BACKING PLATE LENGTH	BACKING PLATE THICKNESS
MD786A MD786AM MVD786A	D786	7655	9 39/64"	5/16"

D786-O

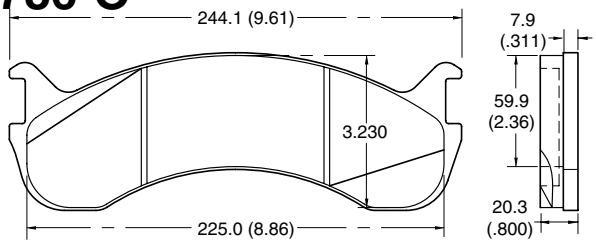

MERITOR SET NO.	FMSI PAD NO.	FMSI SET NO.	BACKING PLATE LENGTH	BACKING PLATE THICKNESS
MD786 MD786M MDV786	D786	7654	9 39/64"	5/16"

D802

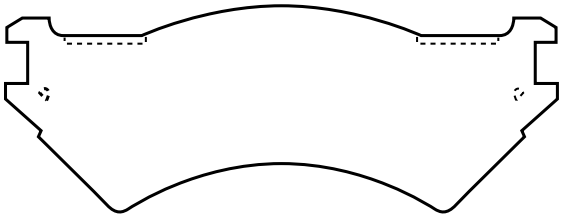

Metal composite shim 0.9 (.035) thick

MERITOR SET NO.	FMSI PAD NO.	FMSI SET NO.	BACKING PLATE LENGTH	BACKING PLATE THICKNESS
MDV802	D802	7673	7 27/64"	1/4"

D821

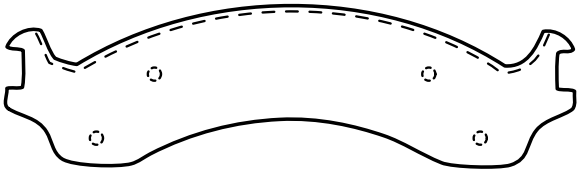

Metal composite shim 1.1 (.043) thick staked-on

MERITOR SET NO.	FMSI PAD NO.	FMSI SET NO.	BACKING PLATE LENGTH	BACKING PLATE THICKNESS
MD821	D821	7694	8 43/64"	1/4"

HYDRAULIC DISC BRAKE PADS

D824

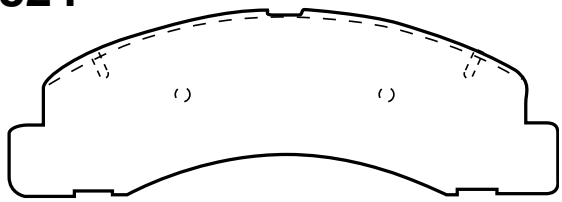

Metal composite insulator 1.0 (.040) thick staked-on
Two shoes have clip-on shim 0.4 (.016) thick

MERITOR SET NO.	FMSI PAD NO.	FMSI SET NO.	BACKING PLATE LENGTH	BACKING PLATE THICKNESS
MVD824	D824	7625	7 39/64"	1/4"

D825

Dimension across center of shoe 51.3 (2.02) ref.

MERITOR SET NO.	FMSI PAD NO.	FMSI SET NO.	BACKING PLATE LENGTH	BACKING PLATE THICKNESS
MD825	D825	7697	8 1/8"	9/32"

D826

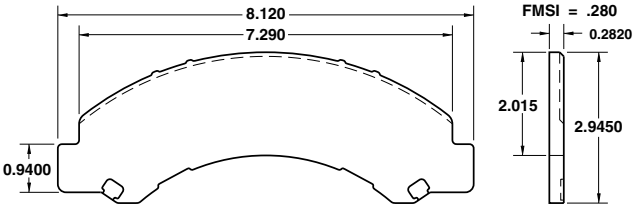

Dimension across center of shoe 59.2 (2.33) ref.

MERITOR SET NO.	FMSI PAD NO.	FMSI SET NO.	BACKING PLATE LENGTH	BACKING PLATE THICKNESS
MD826	D826	7698	8 1/8"	9/32"

D827

FMSI Length 8.28

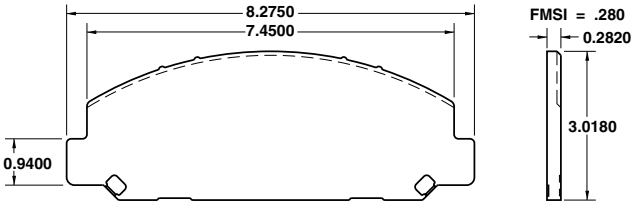

MERITOR SET NO.	FMSI PAD NO.	FMSI SET NO.	BACKING PLATE LENGTH	BACKING PLATE THICKNESS
MD827	D827	7697	8 9/32"	9/32"

D859

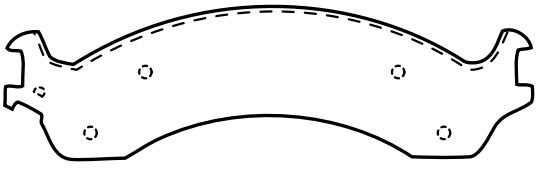

MERITOR SET NO.	FMSI PAD NO.	FMSI SET NO.	BACKING PLATE LENGTH	BACKING PLATE THICKNESS
MD859	D859	7694	8 43/64"	1/4"

D898

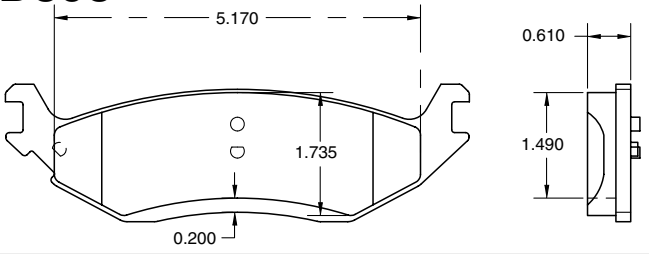

MERITOR SET NO.	FMSI PAD NO.	FMSI SET NO.	BACKING PLATE LENGTH	BACKING PLATE THICKNESS
MD898	D898	7867 7775	5 11/64" 5 5/32"	5/8" 5/8"

D909

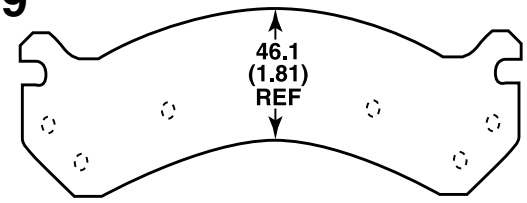

Metal composite shim 0.8 (0.31) thick
All shoes have two sensors (LH,RH)

MERITOR SET NO.	FMSI PAD NO.	FMSI SET NO.	BACKING PLATE LENGTH	BACKING PLATE THICKNESS
MVD909	D909	7694	8 1/2"	17/64"

D928

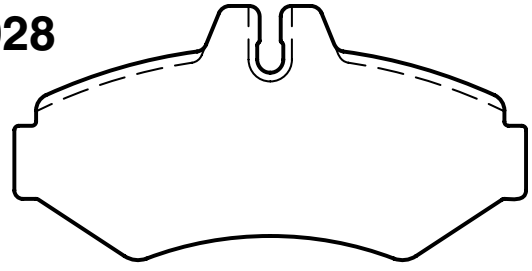

Metal composite shim 0.7 (.028) thick

MERITOR SET NO.	FMSI PAD NO.	FMSI SET NO.	BACKING PLATE LENGTH	BACKING PLATE THICKNESS
MD928	D928	7829	4 61/64"	7/32"

HYDRAULIC DISC BRAKE PADS

D949

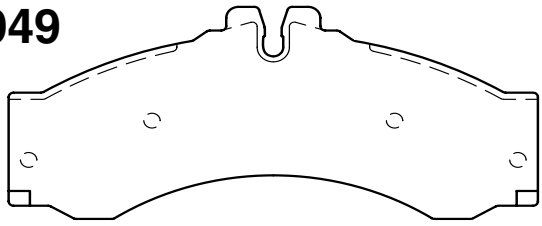

Metal composite shim 0.8 (.032) thick

MERITOR SET NO.	FMSI PAD NO.	FMSI SET NO.	BACKING PLATE LENGTH	BACKING PLATE THICKNESS
MD949	D949	7848	6 31/64"	13/64"

D965

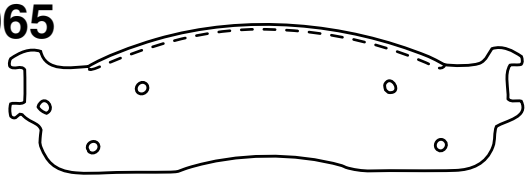

4 shoes same, 2 shoes have wear sensors
Composite shim with sticky back glued on 1.2 (.046) thick

MERITOR SET NO.	FMSI PAD NO.	FMSI SET NO.	BACKING PLATE LENGTH	BACKING PLATE THICKNESS
MD965	D965	7864	8 21/32"	1/4"

D974-O

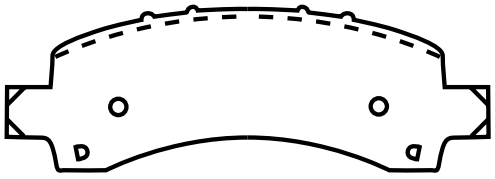

D974-I

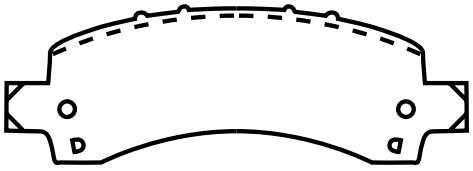

Inner & outer identical, except 1 pair of lugs
Wear sensor LH/RH on lower lug. Shim 0.9 (.034) thick staked on

MERITOR SET NO.	FMSI OUTER PAD NO.	FMSI INNER PAD NO.	FMSI SET NO.	OUTER BACKING PLATE LENGTH	OUTER BACKING PLATE THICKNESS	INNER BACKING PLATE LENGTH	INNER BACKING PLATE THICKNESS
MDV974	D97	D974	7875 7881	6 51/64"	1/4"	6 51/64"	1/4"

D989

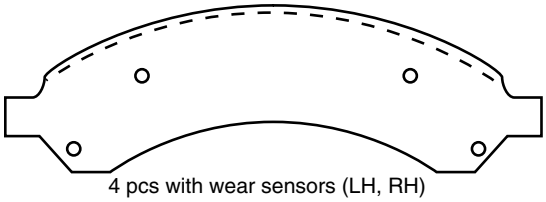

4 pcs with wear sensors (LH, RH)
Composite shim 1.0 (.038) thick staked-on

MERITOR SET NO.	FMSI PAD NO.	FMSI SET NO.	BACKING PLATE LENGTH	BACKING PLATE THICKNESS
MVD989	D989	7891	8 19/32"	9/32"

D1010

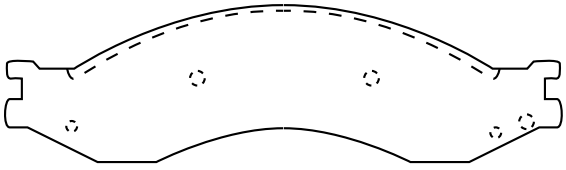

MERITOR SET NO.	FMSI PAD NO.	FMSI SET NO.	BACKING PLATE LENGTH	BACKING PLATE THICKNESS
MD1010	D1010	7914	10 21/32"	1/4"

D1032

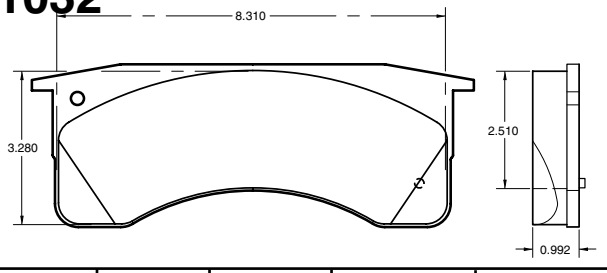

MERITOR SET NO.	FMSI PAD NO.	FMSI SET NO.	BACKING PLATE LENGTH	BACKING PLATE THICKNESS
MD1032	D1032	7636	8 5/16"	63/64"

Note: FMSI 7636D1032 is the same as 7636D769. The lining did not change. While the backing plates are the same dimension, the D1032 plate includes a lug used to attach a squealer tab required by some OEMs. The existing Meritor MD769 disc pads already meet this requirement.

HYDRAULIC DISC BRAKE PADS

D1064

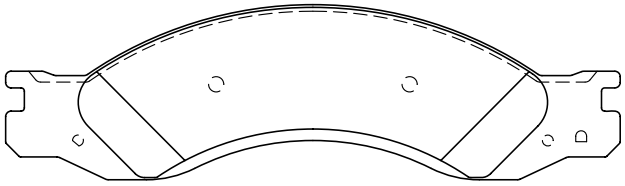

MERITOR SET NO.	FMSI PAD NO.	FMSI SET NO.	BACKING PLATE LENGTH	BACKING PLATE THICKNESS
MVD1064	D1064	7969	8 21/32"	51/64"

D1066

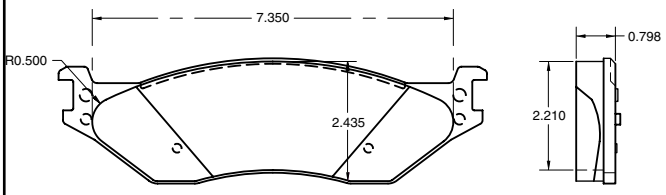

MERITOR SET NO.	FMSI PAD NO.	FMSI SET NO.	BACKING PLATE LENGTH	BACKING PLATE THICKNESS
MD1066	D1066	7972	7 23/64"	51/64"

D1067

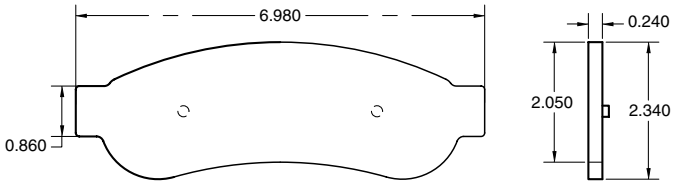

MERITOR SET NO.	FMSI PAD NO.	FMSI SET NO.	BACKING PLATE LENGTH	BACKING PLATE THICKNESS
MD1067 **MVD1067**	D1067	7973	6 63/64"	1/4"

D1068

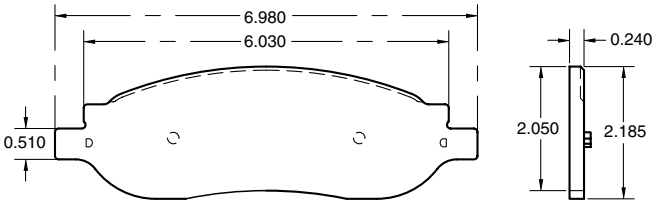

MERITOR SET NO.	FMSI PAD NO.	FMSI SET NO.	BACKING PLATE LENGTH	BACKING PLATE THICKNESS
MD1068 **MVD1068**	D1068	7973	6 63/64"	1/4"

D1069

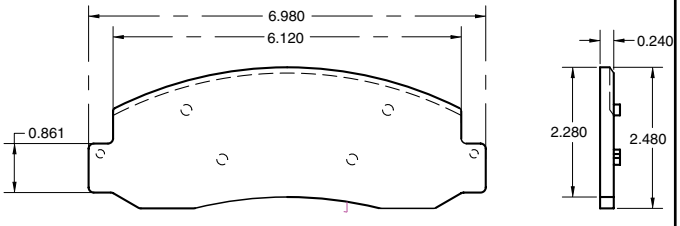

MERITOR SET NO.	FMSI PAD NO.	FMSI SET NO.	BACKING PLATE LENGTH	BACKING PLATE THICKNESS
MD1069 **MVD1069**	D1069	7974		

HYDRAULIC DISC BRAKE PAD SHIMS

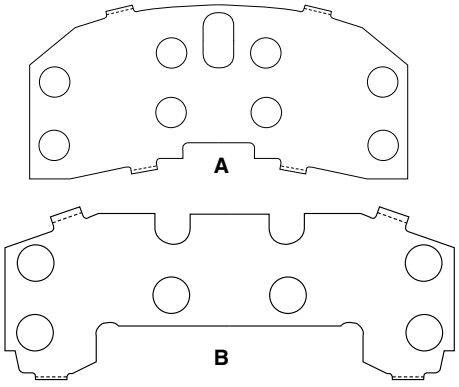

MERITOR NO.	USED WITH DISC PADS		INCLUDES PAD SHIMS
R407921	A	D8, D52-I, D122-I, D313-I	2 Inner
	B	D52-O, D122-O, D313-O	2 Outer

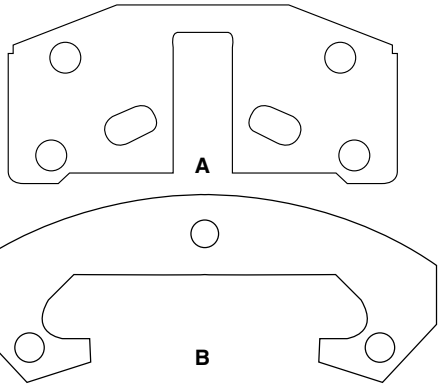

MERITOR NO.	USED WITH DISC PADS		INCLUDES PAD SHIMS
R407926	A	D215-I, D368-I, D369-I, D370-I, D459-I	2 Inner
	B	D215-O, D261-O, D262-O, D368-O, D369-O, D370-O, D459-O	2 Outer

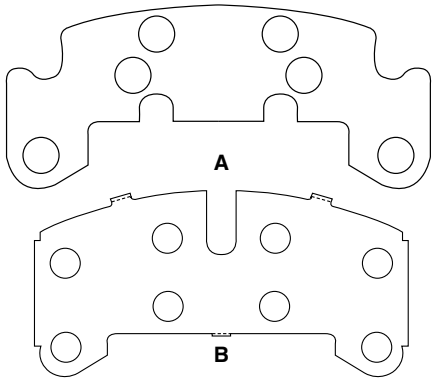

MERITOR NO.	USED WITH DISC PADS		INCLUDES PAD SHIMS
R407939	A	D138-I, D154-I, D202-I	2 Inner
	B	D138-O, D154-O, D202-O	2 Outer

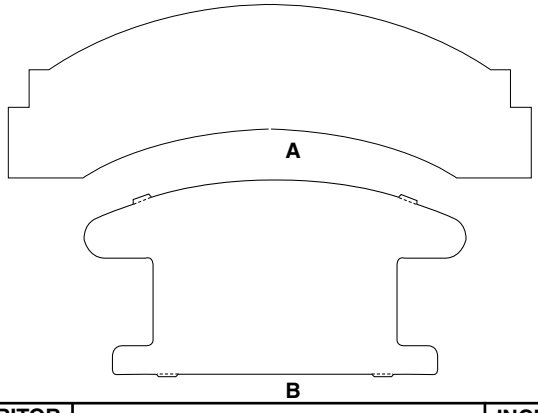

MERITOR NO.	USED WITH DISC PADS		INCLUDES PAD SHIMS
R407945	A	D87-O, D89-O, D129-O, D149-O, D543-O	2 Inner
	B	D89-I, D129-I, D149-I, D543-I	2 Outer

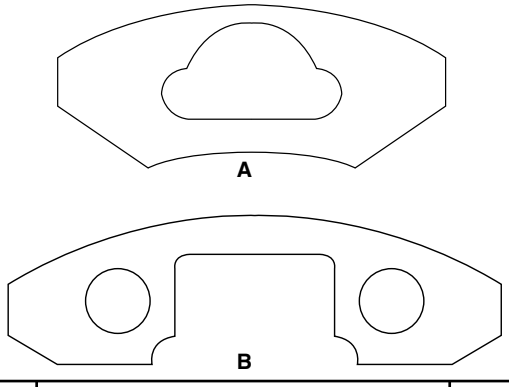

MERITOR NO.	USED WITH DISC PADS		INCLUDES PAD SHIMS
R407975	A	D170, D220, D222, D253-I, D261-I, D344-I, D367-I, D395-I, D403-I, D414-I, D416-I, D477-I, D544-I	2 Inner
	B	D257-O, D294-O, D343-I, D344-O, D367-O, D385-O, D414-O, D416-O, D478-O, D529-O, D544-O	2 Outer

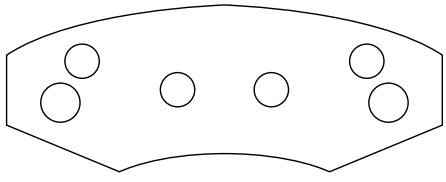

MERITOR NO.	USED WITH DISC PADS	INCLUDES PAD SHIMS
R407980	D219, D221, D259	4

HYDRAULIC DISC BRAKE PAD SHIMS

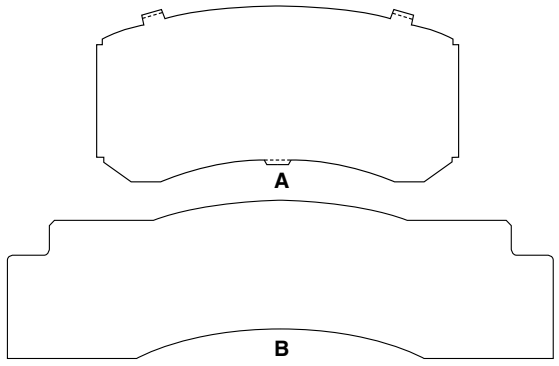

MERITOR NO.		USED WITH DISC PADS	INCLUDES PAD SHIMS
R407987	A	D39, D55-I, D85, D86-I, D123-I, D269-I, D530	2 Inner
	B	D86-O, D123-O, D269-O	2 Outer

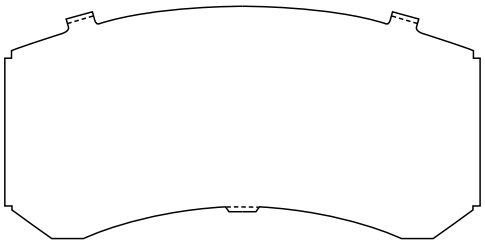

MERITOR NO.	USED WITH DISC PADS	INCLUDES PAD SHIMS
R407992	D39, D55-I, D85, D86-I, D123-I, D269-I, D530	4

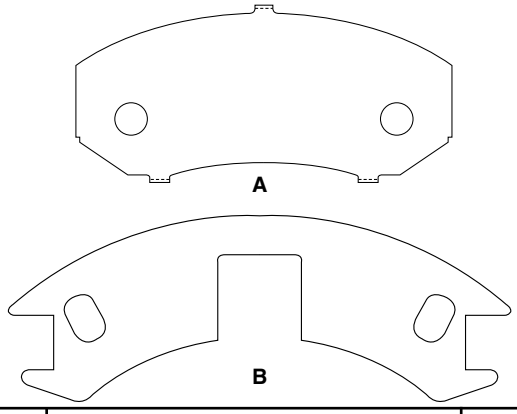

MERITOR NO.		USED WITH DISC PADS	INCLUDES PAD SHIMS
R408016	A	D1, D33-I, D50-I, D87-I, D92-I, D102-I, D205-I, D249-I, D326-I, D360-I, D375-I, D387-I	2 Inner
	B	D14-O, D33-O, D34-O, D205-O, D249-O, D387-O	2 Outer

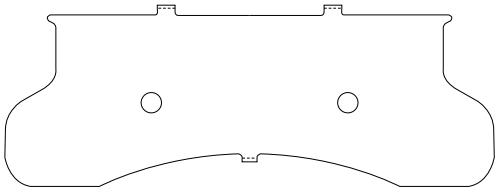

MERITOR NO.	USED WITH DISC PADS	INCLUDES PAD SHIMS
R408022	D120, D450	4

HYDRAULIC DISC BRAKE PAD SHIMS

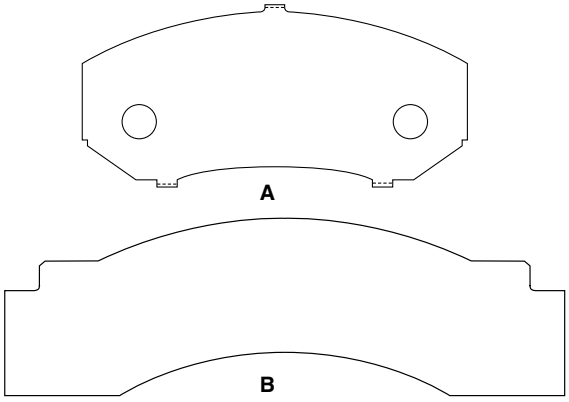

MERITOR NO.		USED WITH DISC PADS	INCLUDES PAD SHIMS
R408024	A	D1, D33-I, D50-I, D87-I, D92-I, D102-I, D205-I, D249-I, D326-I, D360-I, D375-I, D387-I	2 Inner
	B	D50-O, D92-O, D360-O, D375-O	2 Outer

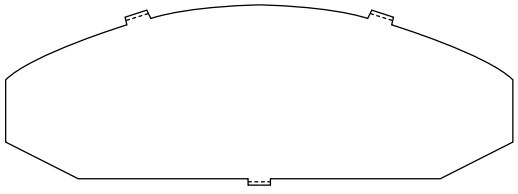

MERITOR NO.	USED WITH DISC PADS	INCLUDES PAD SHIMS
R408058	D203, D333	4

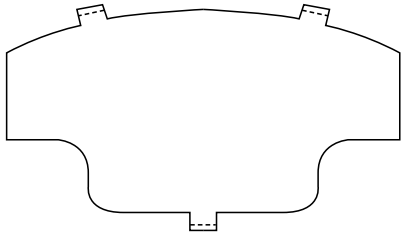

MERITOR NO.	USED WITH DISC PADS	INCLUDES PAD SHIMS
R408456	D91-I, D147, D166, D194-I, D207, D229, D239, D241, D242, D273, D282, D285, D302, D320, D334, D363, D403-O, D433, D474, D487, D534, D539	4

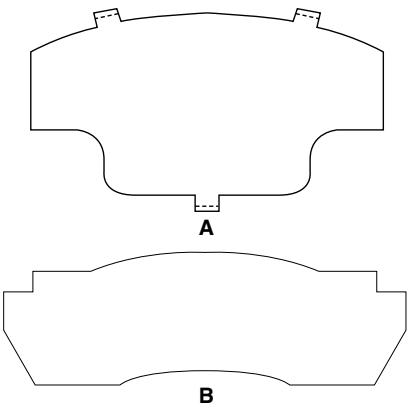

MERITOR NO.		USED WITH DISC PADS	INCLUDES PAD SHIMS
R408030	A	D91-I, D147, D166, D194-I, D207, D229, D239, D241, D242, D273, D282, D285, D302, D320, D334, D363, D403-O, D433, D474, D487, D534, D539	2 Inner
	B	D55-O, D84-O, D91-O, D93-O, D102-O	2 Outer

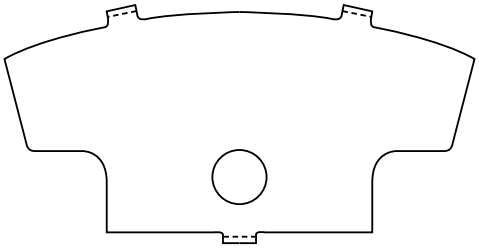

MERITOR NO.	USED WITH DISC PADS	INCLUDES PAD SHIMS
R408076	D49, D97, D98, D115, D130, D131, D265, D266, D338, D386-O	4

HYDRAULIC DISC BRAKE BUMPER GAP SHIM KITS

Service Procedure and Key Selection Instructions

Wear occurs between the Brake Caliper, Steering Knuckle and Retaining Mechanism on some Bendix and Dayton Disc Brakes. This wear causes excess clearance between the caliper and knuckle slide surface resulting in a noise condition (rattle). Continued operation with this noise can result in loss of the Caliper Retaining Spring causing severe damage to the brakes.

Vehicles which have this caliper rattle condition can be corrected by installing a new oversize retaining key and new style support spring. Use of the new key eliminates the necessity to replace caliper and/or steering knuckle to provide the proper caliper thrust clearances. However, in extreme cases, it will be necessary to replace the caliper and steering knuckle. See instruction sheet for specific installation procedures.

	MERITOR NO.	REPLACES	KIT INCLUDES		APPLICATION AND GENERAL INFORMATION
			QTY.	DESCRIPTION	
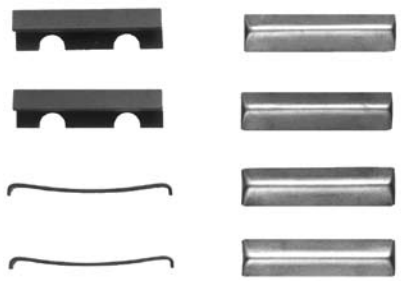	**R40H8203**	Bendix H8203 Carlson H8204	2 2	.025" Thick Shims .045" Thick Shims	For 7142-D225 and 7108-D184 Disc Brakes. See Instruction Sheet packaged with Kit. If gap exceeds .145", replace the Caliper and/or the Anchor Plate.
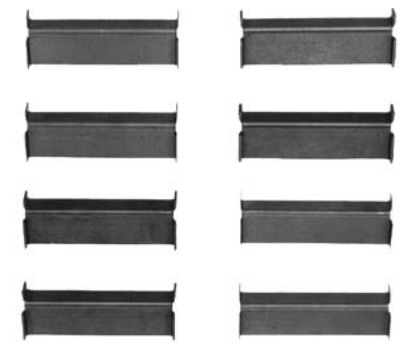	**R40H5664**	Carlson H8205	2 2 2 2	Shims for .036"-.055" gap (Not stamped) Shims for .056"-.075" gap Shims for .076"-.095" gap (Stamped "684") Shims for .096"-.115" gap	For 7054-D120 & 7141-D224 Disc Brakes. See Instruction Sheet (Stamped "683") packaged with Kit. If gap exceeds .115", replace the Caliper and/or the Anchor Plate. (Stamped "685")
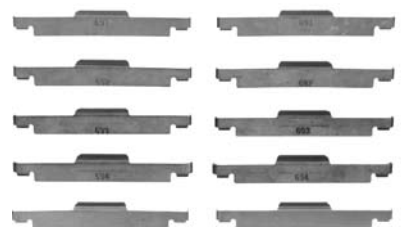	**R404151706**	Carlson H8206	2 2 2 2 2	Shims for .036"-.059" gap (Not stamped) Shims for .060"-.074" gap (Stamped "691") Shims for .075"-.089" gap (Stamped "692") Shims for .090"-.114" gap (Stamped "693") Shims for .115"-.130" gap (Stamped "694")	For 7149-D236 Disc Brakes. See Instruction Sheet packaged with Kit. If gap exceeds .130", replace the Caliper and/or the Anchor Plate.
	R40H5605	Bendix H5605 Carlson H5556	1	.040" Oversized Key for .060"-.100" gap (Stamped "II")	For 7024-D129 & 7081A-D149 Disc Brakes.

HYDRAULIC DISC BRAKE BUMPER GAP SHIM KITS

	MERITOR NO.	REPLACES	KIT INCLUDES		APPLICATION AND GENERAL INFORMATION
			QTY.	DESCRIPTION	
	R40H5606	Bendix H5606 Carlson H5557	1	.080" Oversized Key for .100"-.140" gap (Stamped "III")	For 7024-D129 & 7081A-D149 Disc Brakes.
	R40H5607	Bendix H5607 Carlson H5558	1	.120" Oversized Key for .140"-.180" gap (Stamped "IIII")	For 7024-D129 & 7081A-D149 Disc Brakes.
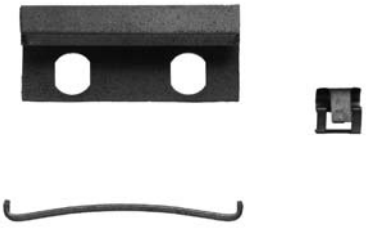	**R40H5608**	Bendix H5608 Carlson H5559	1	.160" Oversized Key for .180"-.220" gap (Stamped "IIIII")	For 7024-D129 & 7081A-D149 Disc Brakes. See Instruction Sheet packaged with Kit. If gap exceeds .220", replace the Caliper and/or the Anchor Plate.

LIGHT-DUTY TRUCK REMANUFACTURED HYDRAULIC DISC BRAKE CALIPERS

Meritor offers a comprehensive line of Remanufactured Calipers for light-duty trucks. A complete listing of these calipers is shown on the following pages.

DRUM & ROTOR MOUNTING TYPES & INSTRUCTIONS

GENERAL DRUM INSTALLATION INSTRUCTIONS

1. Meritor drums are manufactured to standards of concentricity and balance that make further machining at the time of installation unnecessary.
2. The rust preventative colored sealer should be removed from the braking surface by using solvent.
3. It is always necessary to clean hub flange, removing rust and corrosion. If the hub flange is bent, replace the hub.
4. Remove any excessive paint from hub hole in brake drum.
5. Where rivets are used to assemble hub and drum, remove any burrs from the rivet holes in the hub. If flange holes are oversized or elongated, the hub should be replaced.
6. DO NOT USE POWER IMPACT WRENCH UNLESS EQUIPPED WITH TORQUE LIMITING FEATURES.

WARNING:

MANY PARTS THAT SEEM SIMILAR ARE DIFFERENT AND SHOULD *NOT* BE INTERCHANGED.

AGAIN, NOTE THAT THE ILLUSTRATION SECTION OF THIS CATALOG IS NOT TO BE USED TO MAKE PRODUCT SUBSTITUTIONS, BUT TO IDENTIFY CONFIGURATIONS AND APPLICATIONS. SEE DISCLAIMER ON PAGE ii.

TYPE A — REAR AXLE SHAFT FLANGE MOUNTING

These drums are held to rear axle shaft flanges with speednuts, or by hold-down bolts. Drum should come off readily with removal of these fasteners. The studs in the axle shaft flange are not changed.

Finish machining is not required prior to installation.

TYPE B — RIVETED TYPE

These hubs and drums are fastened together by means of rivets and a pilot.

Removal and Installation Procedure

1. Cut off the peened heads of the rivets with a cold chisel.
2. Punch or drill out the rest of the rivets and pilot from the hub. Align hub with new drum and assemble with new rivets by inserting the rivets through the proper holes, then peening them over with a hammer. Be certain that the assembly is properly supported to prevent damage to the hub or drum. (If replacement drum does not contain rivet holes, drum is held in place by wheel bolts.)

NOTE: If rivets are not available, 5/16" machine bolts may be substituted for rivets, using 5/16" machine nuts to hold hub and drum assembly securely.

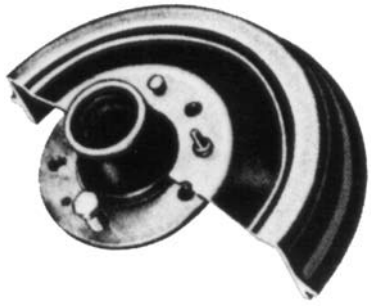

DRUM & ROTOR MOUNTING TYPES & INSTRUCTIONS

TYPE C, D AND E — SWAGED STUD TYPE

These hub and brake drums are held together with studs that have enlarged shoulders, knurled or swaged to securely hold hub and brake drum together. Easy removal is obtained by using a CARBIDE STUD-OFF CUTTER TOOL. It is essential that this tool removes ALL the swaged portion of the stud shoulder, then old stud can be pressed or driven out without damage to the hub flange or hub holes.

Firmly press new studs into the hub using a STUD GUIDE TOOL which aligns drum on the studs and press into position. After satisfactory contact is made between hub flange and brake drum, swage studs securely with a PEENING PUNCH.

NOTE*: *CHRYSLER PRODUCTS ONLY—TYPE C AND D
The original manufacturer supplies two types of brake drums, the full-cast type (shown in Type "C") and the composite type (shown in Type "D"). When replacing the full-cast type drum (as shown in Type "C"), which is called an INBOARD MOUNTING meaning mounted inside the hub flange, be sure to place the new brake drum OUTBOARD MOUNTED which means outside the hub flange (as shown in Type "D").

When replacing composite type brake drum (Type "D") which is an OUTBOARD MOUNTING (mounted outside of the hub flange), the brake drum is replaced in the same OUTBOARD MOUNTED position (outside the hub flange).

WARNING: DO NOT REUSE OLD STUDS.

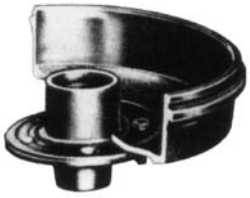

TYPE C

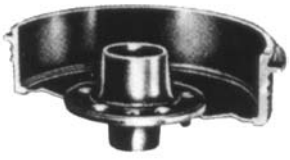

TYPE D

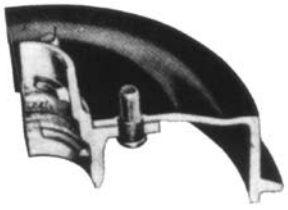

TYPE E

TYPE F — CHEVROLET FRONT HUB AND DRUM

Some models of Chevrolet were shipped from the factory with their hubs and drums assembled with rivets. It is necessary to remove these old rivets to disassemble; however, in replacement of these brake drums reriveting is not required. THE STUDS ARE NEVER REMOVED FROM THE HUB. Many later model Chevrolets have hub and drums that use speednut fasteners to hold the hub and drum together. Replacement of these require only speednuts to hold drums in place.

Removal and Installation Procedure

1. Cut off the peened heads of the rivets with a cold chisel. Drive rivet out from assembly with a steel punch. Remove drum by simply pulling the drum away from the studs.
2. Install new drum over old studs and fasten with 3 speednuts making certain they are forced down entire length of studs to make a secure contact against the brake drum. DO NOT REMOVE OLD STUDS FROM THE HUB.

If drum lathe work is required, it is recommended that either of the following two methods be used:

(a) the wheel should be assembled with hub and drum securely fastened with lug nuts, or

(b) lug nuts should be used on the studs without speednuts, turning the nuts all the way down the stud to the brake drum to securely fasten.

One of these two methods is necessary in order to obtain a solid and secure assembly to make for a perfect turning job on the lathe.

TYPE G — UNICAST HUB AND DRUM

This is a unicast hub and drum and in many instances are furnished without bearing cups. Cups, if not supplied, may have to be purchased for installation into drum before installing drum onto vehicle.

Finish machining is not required prior to installation.

DRUM & ROTOR MOUNTING TYPES & INSTRUCTIONS

TYPE H — HUB AND ROTOR ASSEMBLY

This is a two piece assembly consisting of a hub and rotor machined together and permanently held together with hardware (studs). This assembly is never to be disassembled.

If a stud is stripped, replace only one (1) stud. If necessary to replace more than one (1) stud, the entire assembly must be replaced.

Finish machining is not required prior to installation.

TYPE J — UNICAST ROTOR ASSEMBLY

American Made: If more than one stud must be replaced, exercise extreme caution to be certain proper stud is used and that the stud will withstand torque to manufacturer's specifications.

Imported: If stud hole threads are stripped, the entire assembly must be replaced.

Finish machining is not required prior to installation.

TYPE K — ROTOR ONLY

Rotor is mounted on the outboard side of hub. The rotor is not usually fastened to the hub and should pull free with a minimum of effort after removing caliper. Remove the rotor by sliding it off the hub. Caution should be taken not to damage the threads of the wheel bolts.

Clean hub face thoroughly. Install new rotor on hub in same position as one removed. Be certain that the rotor is perfectly seated on the hub face and that there is not "rocking" before reinstalling wheel and tightening down.

Finish machining is not required prior to installation.

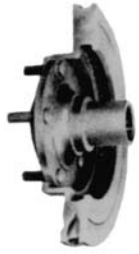

TYPE L — ROTOR ONLY

FIG. A used on U.S. domestic vehicles.
FIG. B used on foreign made vehicles.

The rotor is fastened with hardware (not permanently) to the inboard side of the hub. Remove the hub and rotor as an assembly, being careful not to damage the nut, washer, bearings, etc. Then disassemble the hub from the rotor. Caution should be taken not to damage the threads of the wheel bolts and the assembly bolts.

Clean hub face thoroughly prior to attaching new rotor.

Reassemble rotor to hub by reversing steps required to disassemble old assembly. Be certain that rotor is perfectly seated on hub and that there is no ''rocking" before tightening assembly hardware to vehicle manufacturer's specifications.

Finish machining is not required prior to installation.

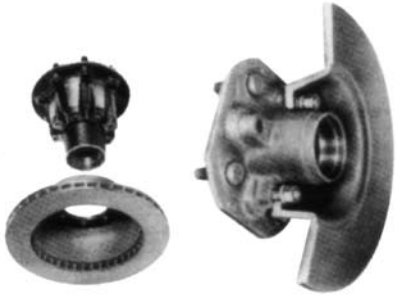

FIG. A **FIG. B**

TYPE M — ROTOR ONLY

Used primarily on American made light-duty trucks and sports utility vehicles.

The Type "M" Rotor is a replacement unit for a rotor which has been attached to the vehicle hub with staked or pressed studs.

Replacement is made by pressing out old studs, disassembling original hub and rotor and reassembling the replacement rotor with the original hub using new wheel studs. Rotor and hub mounting faces should be cleaned thoroughly before reassembly. Detailed instructions for disassembly and reassembly are included with each rotor. These should be followed carefully.

LIGHT-DUTY TRUCK ROTORS, HUBS AND DRUMS NUMERICAL LISTING

MERITOR NO.	MOUNTING TYPE	BRAKE SIZE	REPLACES	BOLT HOLES	BOLT CIRCLE	GENERAL INFORMATION
DRUMS						
R44140254	A	11" x 2"	Wagner BD60294	5	5"	Composite, Ribbed
R44140278	C	12" x 3"	Wagner BD60330	8	6 1/2"	Cast
R44140315	A	11 5/32" x 2 3/4"	Wagner BD 60341	6	5 1/2"	Composite, Ribbed
R44140316	A	11 5/32" x 2 3/4"	Wagner BD 60343	5	5"	Composite, Ribbed
R44140479	A	11 1/32" x 2 1/4"	Wagner BD60351	5	5 1/2"	Composite
R44140039	A	9 1/2" x 2"	Wagner BD60736	5	4 3/4"	Composite, Ribbed
R44140374	A	10 x 1 3/4"	Wagner BD97315	6	5 33/64"	Cast
R44140012	C	12" x 2 1/2"	Wagner BD60151	8	6 1/2"	Cast
R44140388	C	13" x 3 1/2"	Wagner BD60356	8	6 1/2"	Cast,Ribbed
R44140351	A	10 1/4" x 1 49/64"	Wagner BD60362	6	5 33/64"	Cast
R44140397	C	12" x 2 1/2"	Wagner BD60393	8	6 1/2"	Cast
R44140386	A	11" x 2"	Wagner BD60397	6	5 1/2"	Composite, Ribbed
R44140344	C	12" x 3"	Wagner BD60465	8	6 1/2"	Cast
R441404090	A	11 x 2 1/2"	Wagner BD60732	5	5 1/2"	Composite, Ribbed
R44140461	A	9" x 1 3/4"	Wagner BD60787	5	4 1/2"	Composite, Ribbed
R44140451	A	8 55/64" x 1 49/64"	Wagner BD61776	5	4 17/32"	Composite, Ribbed
R44140570	D	9" x 2 1/2"	Wagner BD125038	5	4 1/2"	Composite
R44140363	C	13" x 2 1/2"	Wagner BD60359	8	6 1/2"	Cast,Ribbed
R44140471	A,D	10" x 2"	Wagner BD60375	6	5 33/64"	Cast
R44140391	A	10 x 2 1/2"	Wagner BD60543	5	4 1/2"	Composite
R44140449	A	13" x 2 1/2"	Wagner BD60727	8	6 1/2"	Cast,Ribbed
R44140504	C	12" x 3"	Wagner BD60819	8	6 1/2"	Cast
R44140532	A	11 1/32" x 2 1/4"	Wagner BD60884	5	5 1/2"	Composite
R44140543	E	11 5/32" x 2 3/4"	Wagner BD61817	6	5 1/2"	Cast,Ribbed
R44140409	A	13" x 2 1/2"	Wagner BD60623	8	6 1/2"	Cast,Ribbed
R44140510	A	10 x 2 1/2"	Wagner BD60625	5	5 1/2"	Composite
R44140452	A	10 x 2 1/2"	Wagner BD60720	5	4 1/2"	Composite
R44140450	A	11 5/32" x 2 3/4"	Wagner BD60724	8	6 1/2"	Cast,Ribbed
R44140484	A	9 1/2" x 2"	Wagner BD60792	5	5"	Composite, Ribbed
R44140468	C	12" x 3"	Wagner BD60818	8	6 1/2"	Cast
R44140520	A	12" x 2 1/2"	Wagner BD60868	8	6 1/2"	Cast
R44140499	A	9" x 2 1/2"	Wagner BD60873	5	4 1/2"	Composite, Ribbed
R44140545	C	12 1/8" x 3 1/2"	Wagner BD60885	8	6 1/2"	Cast
R44140497	E	10" x 1 31/32"	Wagner BD61796	6	6 1/2"	Cast
R44140540	A	10" x 2 1/4"	Wagner BD61823	5	5"	Composite, Ribbed
R44140541	A	10" x 2 1/4"	Wagner BD61832	6	5 1/2"	Composite, Ribbed
R44140536	A	13" x 2 1/2"	Wagner BD61891	8	6 1/2"	Cast,Ribbed
R44140253	A	12" x 2 1/2"	Wagner BD60296	8	6 1/2"	Composite
R44140387	C,F	13" x 3 1/2"	Wagner BD60357	8	6 1/2"	Cast,Ribbed
R44140362	C	12" x 3"	Wagner BD60466	8	6 1/2"	Cast
R44140408	A	11 5/32" x 2 3/4"	Wagner BD60595	8	6 1/2"	Cast,Ribbed
R44140493	C	12" x 3"	Wagner BD60793	8	6 1/2"	Cast
R44140574	—		Wagner BD61838	6	5 1/2"	Cast
R44140604	A	11 5/32" x 2 3/4"	Wagner BD125051	5	5"	Composite
R44140542	C	12" x 3"	Wagner BD125201	8	6 1/2"	Cast
R44140365	A	11" x 2 1/2"	Wagner BD60187	5	4 1/2"	Composite, Ribbed
R44140267	C	12" x 2 1/2"	Wagner BD60302	8	6 1/2"	Cast
R44140264	C	12" x 3"	Wagner BD60328	8	6 1/2"	Cast
R44140506	D	9" x 2 1/2"	Wagner BD60831	5	3 15/16"	Composite
R44140547	A	12" x 2 1/2"	Wagner BD60880	8	6 1/2"	Cast
R44140496	D	9" x 2 1/2"	Wagner BD60883	5	4 1/2"	Composite, Ribbed
R44140622	—	11 5/32" x 2 3/4"	Wagner BD125207	5	5"	Composite, Ribbed
R44140619	—	13" x 3 1/2"	Wagner BD125246	—	—	—
R44140619	—	13" x 2 1/2"	Wagner BD125245	8	6 1/2"	Cast, Ribbed
R44140600	—	11 5/32" x 2 3/4"	Wagner BD125052	6	5 1/2"	Composite, Ribbed
R44140657	—	12 1/8" x 3 1/2"	Wanger BD125395	8	6 1/2"	Cast
R44140658	—	13" x 2 1/2"	Bendix 140658	8	6 1/2"	Cast
R44140685	—	12 1/8" x 3 1/2"	Bendix 140685	8	6 1/2"	Cast Finned
R44140679	—	12 1/8" x 3 1/2"	Bendix 140674	8	6 1/2"	Full Cast

LIGHT-DUTY TRUCK ROTORS, HUBS AND DRUMS NUMERICAL LISTING

MERITOR NO.	MOUNTING TYPE	BRAKE SIZE	REPLACES	BOLT HOLES	BOLT CIRCLE	GENERAL INFORMATION
DRUMS (Cont'd.)						
R44140686	—	12 1/8" x 3 1/2"	Bendix 140686	8	6 1/2"	Full Cast Finned
R44140620	—	12 1/8" x 3 1/2"	Bendix 140620	8	6 1/2"	Full Cast
R44140675	—	12" x 2 1/2" and 12" x 3"	Wagner BD125500	8	6 1/2"	Full Cast
R44140712		12" x 2 1/2"	Bendix 140712	7	5 29/32"	Full Cast
R44140682	—	13" x 2 1/2"	Wagner BD125407	8	6 1/2"	Full Cast Finned
R44104716		12 1/8" x 3 1/2"	Bendix 140716	8	6 1/2"	Full Cast
R44140023	—		Bendix 140023			
R44140037	—	9 1/2"	Bendix 140037	5	4 3/4"	Full Cast
R44140583	—	7"	Bendix 140583	4	3.937"	Full Cast
R44140619	—	13" x 3 1/2"	Bendix 140619	8	6 1/2"	Full Cast
R44140724		11" x 2 1/4"	Bendix 140724	5	5 1/2"	Full Cast
R44140722		12 1/8" x 3 1/2"	Bendix 140722	8		Cast
R44140729		12 1/8" x 3 1/2"	Bendix 140729	8		Cast
R4412443		320mm x 75mm	Mitsubshi	5	208.5mm	Centric 122.7400

MERITOR NO.	MOUNTING TYPE	BRAKE SIZE	REPLACES	BOLT HOLES	BOLT CIRCLE	GENERAL INFORMATION
HUB & DRUM						
R44140401	G	7 3/32" x 1 3/8"	Wagner BD60583	4	4 1/2"	—

MERITOR NO.	GENERAL APPLICATION	BRAKE SIZE	REPLACES	BOLT HOLES	BOLT CIRCLE
HUB ONLY					
R44141953	GM	DISC	Wagner BD 61707	6	5 1/2"
R44141951	Ford	DISC	Wagner BD 61706	5	5 1/2"
R448394	GM	DISC	Wagner BD 61708	8	6 1/2"
R448395	Dodge	DISC	Wagner BD 61709	5	5 1/2"
R448396	Dodge	DISC	Wagner BD 61710	8	6 1/2"

MERITOR NO.	MOUNTING TYPE	BRAKE SIZE	REPLACES	BOLT HOLES	BOLT CIRCLE	GENERAL INFORMATION
ROTORS						
R44141263	K	DISC	Wagner BD60678	5	4 17/32"	
R44141171	L	DISC	Wagner BD97291	4	4 1/64"	
R44141261	K	DISC	Wagner BD102075	5	4 3/4"	
R44141088	M	DISC	Wagner BD60413	6	5 1/2"	
R44141194	K	DISC	Wagner BD60531	5	4 1/2"	
R44141237	L,M	DISC	Wagner BD60394	8	6 1/2"	
R44141049	L,M	DISC	Wagner BD60427	8	6 1/2"	
R44141127	L	DISC	Wagner BD6046/	8	4 3/4"	
R44141179	L	DISC	Wagner BD60501	6	4 1/16"	
R44141453	K	DISC	Wagner BD61812	6	5 1/2"	
R44141193	M	DISC	Wagner BD60617	8	6 1/2"	
R44141389	K	DISC	Wagner BD60875	5	4 1/2"	
R44141454	K	DISC	Wagner BD61809	6	5 1/2"	
R44141663	M	DISC	Wagner BD61915	8	6 1/2"	
R44141469	L	DISC	Wagner BD60622	8	6 1/2"	
R44141397	M	DISC	Wagner BD102137	8	6 1/2"	
R44141414	L	DISC	Wagner BD102138	8	6 1/2"	
R44141174	M	DISC	Wagner BD60530	8	6 1/2"	
R44141251	L	DISC	Wagner BD60584	6	4 1/64"	
R44141223	L	DISC	Wagner BD60612	6	5 15/64"	
R44141290	L	DISC	Wagner BD60646	6	4 1/2"	
R44141455	M	DISC	Wagner BD61833	10	5 3/4"	
R44141529	K	DISC	Wagner BD125005	5	115 mm (4.53")	
R44141745	K	DISC	Wagner BD125050	5	127 mm (5")	

LIGHT-DUTY TRUCK ROTORS, HUBS AND DRUMS
NUMERICAL LISTING

MERITOR NO.	MOUNTING TYPE	BRAKE SIZE	REPLACES	BOL/ HOLES	BOLT CIRCLE	GENERAL INFORMATION
ROTORS (Cont'd.)						
R44141483	L	DISC	Wagner BD60593	10	7 1/4"	
R44141289	M	DISC	Wagner BD60609	5	5 1/2"	
R44141664	M	DISC	Wagner BD60610	8	6 1/2"	
R44141477	L,M	DISC	Wagner BD61918	8	6 1/2"	
R44141379	K	DISC	Wagner BD61946	5	3 15/16"	
R44141214	M	DISC	Wagner BD60441	5	5 1/2"	
R44141770	M	12 1/2"	Bendix 141770	8	6 1/2"	Raybestos 56324
R44141922			Bendix 141922			Raybestos 76395
R44141934			Wagner BD125410			Bendix 141934
R44145055	M	12 61/64"	Bendix 145055	8	6 1/2"	Raybestos 66476
R44145139	K	13 9/64"	Bendix 145139	7	5 29/32"	Raybestos 66671
R44141808	M	12 9/16"	Bendix 141808	8	6 1/2"	Raybestos 6978
R44145245	K	13 1/64"	Bendix 145245	8	6 9/13"	Raybestos 66749
R44145274			Bendix 145274	8		Raybestos 66914
R44145325			Bendix 145325	10		Raybestos 66761
R4421533R			Imports			
R4421483R			Imports			
R4421493R			Imports			
R4421503R			Sprinter			
R4421513R			Sprinter			
R442R1771			Sprinter			
R44145202			Bendix 145202			Raybestos 76808
R44141450			Bendix 141450	8		Raybestos 60814
R44141507	K	10 3/64"	Bendix 141507	5	3 15/16"	Raybestos 96043
R44141547	K	11 27/64"	Bendix 141547	5	4 1/2"	Raybestos 66238
R44141586	L	10 7/32"	Bendix 141586	4	4 1/2"	Raybestos 96111
R44141621			Bendix 141621	5		Raybestos 66276
R44141741	K	10 5/32"	Bendix 141741	5	4 1/4"	Raybestos 66204
R44141770	M	12 1/2"	Bendix 141770	8	6 1/2"	Raybestos 56324
R44141893	K	10 3/32"	Bendix 141893	5	4 1/4"	Raybestos 66406
R44145050			Bendix 145050			Raybestos 66749
R44145065	M	10 15/32"	Bendix 145065	6	4 1/3"	Raybestos 56591
R44145079	K	9 1/8"	Bendix 145079	4	3 15/16"	Raybestos 96598
R44145086	L	15"	Bendix 145086	10	7 1/4"	Raybestos 8532
R44145152	K	11 3/32"	Bendix 145152	5	4 1/2"	Raybestos 76646
R44145162			Bendix 145162	8		Raybestos 66695
R44145251	K	12 53/64"	Bendix 145251	8	6 1/2"	Raybestos 66799
R44145257	K	14 17/32"	Bendix 145257	8	6 9/13"	Raybestos 66798
R44145258	K	12 53/64"	Bendix 145258	8	6 9/13"	Raybestos 66823
R44145259	K	12"	Bendix 145259	6	5 1/2"	Raybestos 56825
R44145260	K	13"	Bendix 145260	8	6 1/2"	Raybestos 56828
R44145261	K	12 4/5"	Bendix 145261	8	6 1/2"	Raybestos 56829
R44145262	K	13"	Bendix 145262	8	6 1/2"	Raybestos 56830
R44145268			Bendix 145268	8		Raybestos 66834
R44145280			Bendix 145280	8		Raybestos 66824
R44145316			Bendix 145316			Raybestos 580000
R44145317			Bendix 145317			Raybestos 56999
R44145339			Bendix 145339	8		Raybestos 56992
R44145345			Bendix 145345			
R44145360			Bendix 145360			
R44145283			Bendix 145283	8		Raybestos 76920
R44145357			Bendix 145357			Raybestos 780020
R44145456			Bendix 145456	8		Raybestos 780143
R44145452			Bendix 145452	8		Raybestos 780139
R44145028	L	13 37/64"	Bendix 145028	10	7 1/4"	Raybestos 56493
R44145309			Bendix 145309			Raybestos 66924
R44145279			Bendix 145279	8		Raybestos 66789
R4412432	H	288.0mm	Mitsubishi Fuso	5	136.0mm	Centric 120.46055
R4412438	H	293.0mm	Mitsubishi Fuso	12	124.0mm	Centric 120.46059
R4412450	H	293.0mm	Mitsubishi Fuso	5	137.0mm	Centric 120.74001
R4412451	H	293.0mm	Mitsubishi Fuso	6	140.0mm	Centric 120.46056
R4412454	H	286.0mm	Mitsubishi Fuso	5	140.2mm	Centric 120.77000

LIGHT-DUTY TRUCK ROTORS, HUBS AND DRUMS NUMERICAL LISTING

MERITOR NO.	MOUNTING TYPE	BRAKE SIZE	REPLACES	BOLT HOLES	BOLT CIRCLE	GENERAL INFORMATION
HUB & ROTOR/ASSEMBLY						
R44141154	J	DISC	Wagner BD60469	8	6 1/2"	
R44141219	J	DISC	Wagner BD102074	5	4 3/4"	
R44141067	J	DISC	Wagner BD60428	5	5 1/2"	
R44141216	J	DISC	Wagner BD60476	5	5"	
R44141233	J	DISC	Wagner BD60627	5	4 3/4"	
R44141043	J	DISC	Wagner BD60258	5	5"	
R44141234	J	DISC	Wagner BD60542	8	6 1/2"	
R44141264	H	DISC	Wagner BD60663	5	4 1/2"	
R44141186	J	DISC	Wagner BD60402	8	6 1/2"	
R44141235	J	DISC	Wagner BD60541	8	6 1/2"	
R44141468	L	DISC	Wagner BD60597	8	6 1/2"	
R44141265	J	DISC	Wagner BD60693	5	4 1/2"	
R44141382	J	DISC	Wagner BD60731	8	6 1/2"	
R44141452	H	DISC	Wagner BD60879	5	5 1/2"	
R44141482	J	DISC	Wagner BD61813	5	5"	
R44141487	J	DISC	Wagner BD61910	8	6 1/2"	
R44141519	J	DISC	Wagner BD61911	5	4 1/2"	
R44141130	J	DISC	Wanger BD60443	8	6 1/2"	
R44141152	J	DISC	Wagner BD60451	8	6 1/2"	
R44141197	J	DISC	Wagner BD60532	8	6 1/2"	
R44141196	J	DISC	Wagner BD60533	5	4 1/2"	
R44141480	L	DISC	Wagner BD61808	8	6 1/2"	
R44141540	J	DISC	Wagner BD61814	8	6 1/2"	
R44141498	J	DISC	Wagner BD61818	5	4 1/2"	
R44141457	J	DISC	Wagner BD61819	6	5 1/2"	
R44141153	J	DISC	Wagner BD60470	8	6 1/2"	
R44141391	J	DISC	Wagner BD60729	5	5"	
R44141415	J	DISC	Wagner BD60874	5	4 39/64"	
R44141481	J	DISC	Wagner BD60889	5	4 1/2"	
R44141508	J	12 1/2"	Wagner BD61846	8	6 1/2"	Raybestos 56022
R44141866	J	12 9/16"	Wagner BD125167	8	6 1/2"	Raybestos 56189
R44141464	J	DISC	Wagner BD125171	5	5"	
R44141488	J	11 39/64"	Wagner BD125205	5	5"	Raybestos 5973
R44141829	J	DISC	Wagner BD125206	5	5"	
R44141806	J	DISC	Wagner BD125208	6	5 1/2"	
R44141818	J	DISC	Wagner BD125212	8	6 1/2"	
R44141089	L	DISC	Wagner BD60434	8	6 1/2"	
R44141861	J	DISC	Wagner BD125331	8	6 1/2"	
R44141381	J	11 3/4"	Wagner BD60784	5	5 1/2"	Raybestos 7009
R44141927	J	12 1/2"	Bendix 141927	8	6 1/2"	Raybestos 76465
R44141923	J	12 1/2"	Bendix 141923	8	6 1/2"	Raybestos 76452
R44141924	J	12 13/16"	Bendix 141924	8	6 1/2"	Raybestos 76399
R44145049	J	13 1/32"	Bendix 145049	8	6 1/2"	Raybestos 66527
R44145057	J	13 1/32"	Bendix 145057	8	6 1/2"	Raybestos 66528
R44145071	J	13 1/32"	Bendix 145071	8	6 1/2"	Raybestos 66529
R44145068	J	13 1/32"	Bendix 145129	8	6 1/2"	Raybestos 66530
R44145054	J	13 1/32"	Bendix 145054		6 1/2"	Raybestos 66603
R44145071	J	13 1/32"	Bendix 145071	8	6 1/2"	Raybestos 66529
R44141862	J	12 1/2"	Bendix 141862	8	6 1/2"	Raybestos 56397
R44141867	J	12 9/16"	Bendix 141867	8	6 1/2"	Raybestos 6078
R44141903	J	10 55/64"	Bendix 141903	5	4 1/2"	Raybestos 66402
R44141906	J	11 23/32"	Bendix 141906	5	5 1/2"	Raybestos 66455
R44145134			Bendix 145134	8		Raybestos 56593
R44145141			Bendix 145141	5		Raybestos 66653
R44145192	J	13 1/32"	Bendix 145192	8	6 1/2"	Raybestos 66530
R44145255	J	13 1/64"	Bendix 145255	8	6 11/16"	Raybestos 66785
R44145256	J	13 1/64"	Bendix 145256	8	6 11/16"	Raybestos 66786
R44145267			Bendix 145267			Raybestos 66768
R44145108	J	12 1/2"	Bendix 145108	8	6 1/2"	Raybestos 76599
R44145368			Bendix 145368	8		Raybestos 56750
R44145859	J	12 1/2"	Bendix 145859	8	6 1/2"	Raybestos 56396

MEDIUM-DUTY TRUCK HYDRAULIC DISC BRAKE ROTORS

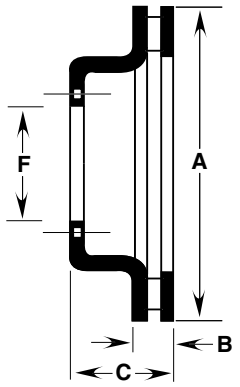

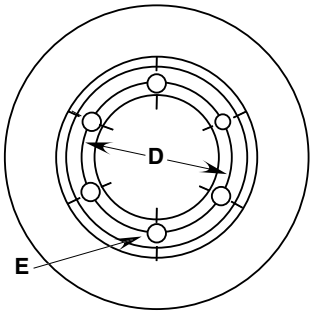

A — DISC OUTSIDE DIA.

B — NEW DISC THICKNESS*

C — ROTOR OVERALL DEPTH

D — BOLT CIRCLE

E — DIA. & NUMBER OF HOLES

F — PILOT DIA.

TYPE 1
"HAT" SHAPE

TYPE 2
"U" SHAPE

DISC BRAKE ROTOR NUMERICAL LISTING

MERITOR PART NO.	EUCLID PART NO.	ROTOR TYPE	A OUTSIDE DISC DIAMETER	B DISC THICKNESS NEW	B DISC THICKNESS MINIMUM WEAR	C OVERALL ROTOR DEPTH	D BOLT CIRCLE	E BOLT HOLES DIA.	E BOLT HOLES NO.	F PILOT DIA.	COMMENTS
23-122527-002	E-4231	2	15.00	1.440	1.320	6.80	8.750	0.812	6	7.000	
23-122687-002	E-4229	1	14.93	1.350	1.225	3.82	6.750	0.656	5	5.220	For ABS Use 23-123486-002
23-122688-002	E-9804	1	14.75	1.350	1.225	3.81	6.750	0.656	6	5.400	For ABS Use 23-123468-002
23-122691-002	E-4228	2	15.38	1.540	1.415	4.76	11.250	0.781	6	9.251	
23-122693-002	E-4246	2	15.38	1.540	1.415	6.22	11.250	0.812	10	9.499	Gunite D6059
23-122700-002	E-4227	1	14.75	1.350	1.225	3.81	7.250	0.781	6	5.401	For ABS Use 23-123480-002
23-122701-002	E-4232	2	15.00	1.430	1.320	4.50	11.250	0.656	5	9.187	
23-122703-002	E-4233	2	15.38	1.540	1.415	6.07	11.250	0.84	10	8.688	
23-122729-002	E-4230	1	15.38	1.540	1.415	3.40	7.250	0.594	10	6.000	
23-122743-002	E-4234	2	15.38	1.540	1.415	6.03	8.750	0.844	6	6.446	Ford Part Number E4HZ1125D
23-122897-002	E-4247	1	15.00	1.435	1.320	4.44	7.250	0.578	10	6.001	For ABS Use 23-123552-004
23-123041-002	E-9807	1	14.25	1.440	1.320	2.98	6.000	5.31	5	4.600	
23-123046-002	E-9808	1	14.25	1.440	1.320	2.98	6.000	0.531	6	4.600	GM 15579754
23-123296-002	E-9809	1	14.75	1.350	1.225	3.81	7.250	0.591	10	6.000	For ABS Use 23-123495-002
23-123341-002	-	2	15.38	1.540	1.415	7.82	10.830	0.544	8	8.350	275mm Bolt Circle - Use With 19.5" Rims
23-123433-002	E-11327	2	15.38	1.435	1.320	6.21	11.250	0.812	10	9.499	GM Application
23-123434-002	E-11307	1	15.38	1.440	1.320	3.40	7.250	0.594	10	6.000	For ABS Use 23-123485-002
23-123439-002	E-11306	1	14.75	1.350	1.225	3.81	7.250	0.781	10	6.000	Ford F4HZ1125A

DISC BRAKE ROTOR NUMERICAL LISTING

MERITOR PART NO.	EUCLID PART NO.	ROTOR TYPE	A OUTSIDE DISC DIAMETER	B DISC THICKNESS NEW	B DISC THICKNESS MINIMUM WEAR	C OVERALL ROTOR DEPTH	D BOLT CIRCLE	E BOLT HOLES DIA.	E BOLT HOLES NO.	F PILOT DIA.	COMMENTS
23-123440-002	E-11308	1	15.38	1.540	1.415	3.40	7.250	0.594	10	6.000	For ABS Use 23-123489-002
23-123443-002	E-11327	1	14.75	1.350	1.225	3.81	7.250	0.781	6	5.400	6 Tapped Holes For ABS Ring Mounting (8.140 Bolt Circle)
23-123458-002	E-11309	1	15.38	1.540	1.415	3.40	7.250	0.656	10	6.000	For ABS Use
23-123460-002	E-11321	1	14.75	1.350	1.225	3.81	7.250	0.781	6	5.750	6 Tapped Holes For ABS Ring Mounting
23-123461-002	-	2	15.38	1.540	1.415	7.27	11.250	0.937	10	9.120	5 Tapped Holes For ABS Ring Mounting
23-123468-002	E-11322	1	14.75	1.350	1.225	3.81	6.750	0.656	6	5.400	6 Tapped Holes For ABS Ring Mounting
23-123480-002	E-11323	1	14.75	1.350	1.225	3.81	7.250	0.781	6	5.400	6 Tapped Holes For ABS Ring Mounting
23-123485-002	E-11125	1	15.38	1.440	1.320	3.40	7.250	0.594	10	6.000	5 Tapped Holes For ABS Ring Mounting (M8x1.25-6H 6.8" B.C.)
23-123486-002	E-11310	1	14.75	1.350	1.225	3.81	6.750	0.656	5	5.400	5 Tapped Holes For ABS Ring Mounting (Metric)
23-123487-002	E-11324	1	14.75	1.350	1.225	3.81	6.750	0.656	5	5.400	5 Tapped Holes For ABS Ring Mounting (1/4"-20 5.90 B.C.)
23-123489-002	E-11311	1	15.38	1.540	1.415	3.40	7.250	0.594	10	6.000	5 Tapped Holes For ABS Ring Mounting GMC Application
23-123494-002	E-11312	1	14.75	1.350	1.225	3.81	7.250	0.781	6	5.760	New Holland 86514074
23-123495-002	E-11313	1	14.75	1.350	1.225	3.81	7.250	0.594	10	6.000	5 Tapped Holes For ABS Ring Mounting
23-123497-002	E-11328	1	14.75	1.350	1.225	3.81				4.501	
23-123498-002	-	1	15.38	1.540	1.415	3.41	7.250	0.656	10	5.964	5 Tapped Holes For ABS Ring Mounting
23-123527-002	E-11326	1	15.63	1.540	1.415	3.63	7.250	0.656	10	5.964	Ford YC3Z1125AA
23-123528-002	-										
23-123529-002	E-11325	1	14.75	1.350	1.225	3.98	7.250	0.656	5	6.001	Casting Number 23-122687-096
23-123532-002	E-11329	1	15.17	1.440	1.320	2.90	6.750	0.656	5	5.400	GM Applications
23-123550-004	E-11470	1	15.00	1.440	1.320	3.21	7.250	0.594	10	6.001	ITE 3531662C2 / ABS Exciter Teeth In Casting (100)
23-123552-004	-	1	15.00	1.440	1.320	4.44	7.250	0.594	10	6.001	ITE 3531663C2 / ABS Exciter Teeth In Casting (100)
23-123557-002	-	1	15.38	1.530	1.410	3.40	7.250	0.594	10	6.001	ABS Exciter Teeth In Casting (100)
23-123572-004	E-6115	1	15.00	1.440	1.320	3.50	6.750	0.781	6	5.401	ABS Exciter Teeth In Casting (100)
23-123573-004	E-6114	1	15.00	1.440	1.320	3.50	6.750	0.781	5	5.400	ITE 3531661C2 / ABS Exciter Teeth In Casting (100)
23-123574-004		2	15.38	1.540	1.415	7.60	11.250	0.937	10	9.120	
23-123617-004		1	15.38	1.540	1.415	3.40	7.250	0.594	8	6.001	
23-123618-002		2	11.96	1.180	1.035	6.05	7.500	.50-13 UNC	6	6.130	Hino
23-123624-002		2	12.76	1.180	1.035	6.33	7.750	.50-13 UNC	8	6.130	Hino
23-123625-002		2	12.76	1.180	1.035	4.63	8.000	.50-13 UNC	8	6.502	Hino
23-123626-002		2	11.96	1.180	1.035	4.64	7.500	.50-13 UNC	6	6.502	Hino

DISC BRAKE ROTOR NUMERICAL LISTING

MERITOR PART NO.	EUCLID PART NO.	ROTOR TYPE	A OUTSIDE DISC DIAMETER	B DISC THICKNESS NEW	B DISC THICKNESS MINIMUM WEAR	C OVERALL ROTOR DEPTH	D BOLT CIRCLE	E BOLT HOLES DIA.	E BOLT HOLES NO.	F PILOT DIA.	COMMENTS
23-123648-002	-	1	15.00	1.440	1.320	3.50	6.750	0.781	5	5.400	ABS Exciter Ring (Works as a Replacement for 23-123573-004) Replaceable / 5 holes Tapped 10-24 @ 7.680 B.C.
R44141583	E-9805	-	-	-		-	-	-	6	-	GM 155144761 / 15500340 / 15500339
R44141627	E-4242	2	15.00	1.430	1.320	5.90	12.750	0.76	5	14.000	Gunite D6115A
R44141629	E-4240	2	15.00	1.430	1.320	5.05	12.000	0.65	5	13.000	ITE 595987C1
R44141730	E-9817	1	11.11	1.380	1.270	2.50	136mm	0.5	12	-	Isuzu 8-97015-357-0
R44141856	E-8903	2	15.62	1.750	1.630	6.36	11.250	1.28	10	9.000	TH-24 Gunite Air / Hydraulic
R44141858	E-8905	2	15.00	1.430	1.320	4.26	10.500	0.65	5	9.000	
R447184	E-7184	2	15.38	1.535	1.410	6.25	10.827	0.844	8	8.347	FORD E6HZ-1125G
R447185	E-7185	2	15.38	1.535	1.410	6.61	13.198	1.047	10	10.950	FORD E6HZ-1125F
R448904	E-8904	2	15.62	1.750	1.630	4.92	12.750	0.78	6	10.000	TH-24 Gunite Air / Hydraulic
R449873	E-9873	2	15.00	1.450	1.320	4.77	11.250	0.78	5	9.000	ITE 1660669C1
Commonly Mistaken Identified Rotors											
23-122688-002	E-9804	1	14.75	1.350	1.225	3.81	6.750	0.656	6	5.400	For ABS Use 23-123468-002
23-123468-002	E-11322	1	14.75	1.350	1.225	3.81	6.750	0.656	6	5.400	6 Tapped Holes for ABS Ring Mounting (1/4"-20 5.90 B.C.)
23-123487-002	E-11324	1	14.75	1.350	1.225	3.81	6.750	0.656	5	5.400	5 Tapped Holes for ABS Ring Mounting (1/4"-20 5.90 B.C.)
23-122687-002	E-4229	1	14.93	1.350	1.225	3.82	6.750	0.656	5	5.220	For ABS Use 23-123486-002
23-123486-002	E-11310	1	14.75	1.350	1.225	3.81	6.750	0.656	5	5.400	5 Tapped Holes for ABS Ring Mounting (Metric) (M8 x 1.25-6H 8.386 B. C.)
23-122700-002	E-4227	1	14.75	1.350	1.225	3.81	7.250	0.781	6	5.401	For ABS Use 23-123480-002
23-123443-002	E-11327	1	14.75	1.350	1.225	3.81	7.250	0.781	6	5.400	6 Tapped Holes for ABS Ring (1/4"-20 @ 8.140 B. C.)
23-123480-002	E-11323	1	14.75	1.350	1.225	3.81	7.250	0.781	6	5.400	6 Tapped Holes for ABS Ring Mounting (1/4"-20 @ 6.342 B. C.)
23-122527-002	E-4231	2	15.00	1.440	1.320	6.80	8.750	0.812	6	7.000	
23-123460-002	E-11321	1	14.75	1.350	1.225	3.81	7.250	0.781	6	5.750	6 Tapped Holes For ABS Ring Mounting (1/4"-20 @ 8.14 B.C)
23-123494-002	E-11312	1	14.75	1.350	1.225	3.81	7.250	0.781	6	5.760	New Holland 86514074

DISC BRAKE ROTOR NUMERICAL LISTING

MERITOR PART NO.	EUCLID PART NO.	ROTOR TYPE	A OUTSIDE DISC DIAMETER	B DISC THICKNESS NEW	B DISC THICKNESS MINIMUM WEAR	C OVERALL ROTOR DEPTH	D BOLT CIRCLE	E BOLT HOLES DIA.	E BOLT HOLES NO.	F PILOT DIA.	COMMENTS
Commonly Mistaken Identified Rotors (Cont'd.)											
23-123296-002	E-9809	1	14.75	1.350	1.225	3.81	7.250	0.591	10	6.000	For ABS Use 23-123495-002
23-123495-002	E-11313	1	14.75	1.350	1.225	3.81	7.250	0.594	10	6.000	5 Tapped holes For ABS Ring Mounting (Metric) (M8x1.25-6H @ 8.386 B. C.)
23-123434-002	E-11307	1	15.38	1.440	1.320	3.40	7.250	0.594	10	6.000	For ABS Use 23-123485-002
23-123485-002	E-11125	1	15.38	1.440	1.320	3.40	7.250	0.594	10	6.000	5 Tapped Holes For ABS Ring (M8x1.25-6H @ 6.8" B.C.)
23-122729-002	E-4230	1	15.38	1.540	1.415	3.40	7.250	0.594	10	6.000	
23-123440-002	E-11308	1	15.38	1.540	1.415	3.40	7.250	0.594	10	6.000	For ABS Use 23-123489-002
23-123489-002	E-11311	1	15.38	1.540	1.415	3.40	7.250	0.594	10	6.000	5 Tapped Holes For ABS Ring Mounting (M8x1.25-6H @6.8" B.C.) GMC Appl.
23-122897-002	E-4247	1	15.00	1.435	1.320	4.44	7.250	0.578	10	6.001	For ABS Use 23-123552-004
23-123552-004	-	1	15.00	1.440	1.320	4.44	7.250	0.594	10	6.001	ITE 3531663C2 / ABS Exciter Teeth In Casting (100)
23-123498-002	-	1	15.38	1.540	1.415	3.41	7.250	0.656	10	5.964	5 Tapped Holes For ABS Ring Mounting (1/4"- 20 @ 9.125"B.C.)
23-123458-002	E-11309	1	15.38	1.540	1.415	3.40	7.250	0.656	10	6.000	
23-123440-002	E-11308	1	15.38	1.540	1.415	3.40	7.250	0.594	10	6.000	For ABS Use 23-123489-002
23-123489-002	E-11311	1	15.38	1.540	1.415	3.40	7.250	0.594	10	6.000	5 Tapped Holes For ABS Ring Mounting (M8x1.25-6H @ 6.8" B.C.) GMC Application
23-123461-002	-	2	15.38	1.540	1.415	7.27	11.250	0.937	10	9.120	5 Tapped Holes For ABS Ring Mounting (1/4" - 20 @ 9.125"B.C.)

MEDIUM-DUTY TRUCK HYDRAULIC DISC BRAKE ROTORS

DISC BRAKE ROTOR IDENTIFICATION CHART

SPOKE WHEEL — (Primary Application)

	MAJOR DIA.	ROTOR TYPE	VEHICLE MFR. NO.	BENDIX PART NO.	GUNITE PART NO.	WEBB PART NO.	EUCLID PART NO.	MERITOR PART NO.
5 Spoke	14.25"	1	GMC 15579020	141489	-	-	E-9807	**23-123041-002**
5 Spoke	15.00"	2	ITE 588126C1	141274	D6128	54255	E-4232	**23-122701-002**
5 Spoke	15.00"	2	ITE 589868C1	-	D6114	-	E-4240	**-**
5 Spoke	15.00"	2	ITE 595987C1	141628	D6115	-	E-4241	**23-122728-002**
5 Spoke	15.00"	2	ITE 1648518C1	141627	D6115A	-	E-4242	**23-122962-002**
5 Spoke	15.00"	2	ITE 1648517C1	141493	R6128A	54256	E-8902	**23-122920-002**
5 Spoke	15.00"	2	ITE 508526C2	141858	D6170	-	E-8905	**-**
5 Spoke	15.00"	2	ITE 1660669C1	141875	D6168	-	E-9873	**-**
6 Spoke	15.38"	2	FORD E3HZ-1102A	141270	-	54351	E-4228	**23-122691-002**
6 Spoke	15.62"	2	FORD D5HZ-1102B	-	R3064X	-	E-8904	**-**
6 Spoke	15.63"	2	-	141276	-	-	E-4234	**23-122743-002**

DISC WHEEL - (Primary Application)

6 Stud	-	-	GMC 15514476 / 15500340 / 15500339	141583	-	-	E-9805	**-**
12 Stud	11.11"	1	ISUZU 8-97015-357-0	141730	-	-	E-9817	**-**
5 Stud	14.75"	1	-	-	D6054A	54104	E-11310	**23-123486-002**
6 Stud	14.75"	1	-	-	D6128A	-	E-11312	**23-123494-002**
10Stud	14.75"	1	-	-	D5054A	54106	E-11313	**23-123495-002**
6 Stud	14.75"	1	-	-	R6054C	54301	E-11327	**23-123443-002**
6 Stud	14.75"	1	-	141274	D6128	-	E-11321	**23-123460-002**
6 Stud	14.75"	1	-	141271	D6054	54102	E-11322	**23-123468-002**
6 Stud	14.75"	1	-	141276	D6054C	54352	E-11323	**23-123480-002**
5 Stud	14.75"	1	-	-	-	-	E-11324	**23-123487-002**
10 Stud	14.75"	1	-	-	-	-	E-11325	**23-123529-002**
10 Stud	14.75"	1	-	-	-	-	E-11328	**23-123497-002**
6 Stud	14.75"	1	GMC 15611098 / 15515789	141585	D6054A	54104P	E-9804	**23-122688-002**
6 Stud	15.00"	2	ITE 589843C1	141273	-	-	E-4231	**23-122527-002**
10 Stud	15.00"	2	ITE 582029C1	141608	D6145	-	E-4243	**23-122945-002**
10 Stud	15.00"	1	ITE 1646750C1	141494	D6151	-	E-4247	**23-122897-002**
6 Stud	15.00"	1	ITE 1646770C1 / 2505097C1	141475	D6194A	54770	E-6115	**23-123572-004**
10 Stud	15.38"	1	-	-	-	-	-	**23-123557-002**
10 Stud	15.38"	1	-	-	-	-	E-11125	**23-123485-002**
10 Stud	15.38"	1	-	145058	-	54103	E-11307	**23-123434-002**
10 Stud	15.38"	2	FORD E4HZ-1125C	141275	-	-	E-4233	**23-122703-002**
6 Stud	15.38"	2	FORD E4HZ-1125D	141276	-	-	E-4234	**23-122743-002**
8 Stud	15.38"	2	FORD E6HZ-1125G	-	-	-	E-7184	**-**
10 Stud	15.38"	2	FORD E6HZ-1125F	-	-	-	E-7185	**-**
8 Stud	15.38"	2	-	-	-	-	-	**23-123341-002**
10 Stud	15.62"	2	FORD D5HZ-1102A	141856	R3065X	-	E-8903	**-**

MEDIUM-DUTY TRUCK HYDRAULIC DISC BRAKE ROTORS
DISC BRAKE ROTOR IDENTIFICATION CHART

SPOKE WHEEL or DISC WHEEL — (Primary Application)

	MAJOR DIA.	ROTOR TYPE	VEHICLE MFR. NO.	BENDIX PART NO.	GUNITE PART NO.	WEBB PART NO.	EUCLID PART NO.	MERITOR PART NO.
6 Stud	14.25"	1	GM 15579754	141490	-	-	E-9808	**23-123046-002**
5 Stud	14.75"	1	FORD YC4Z-2C026AA	-	-	-	-	**23-123528-002**
10 Stud	14.75"	1	FORD F4HZ-1125A	145058	-	54351	E-11306	**23-123439-002**
6 Stud	14.75"	1	FORD E4HZ-1125A	141269	D6054C	54103P	E-4227	**23-122700-002**
8 Stud	14.75"	1	-	-	-	54106	E-9809	**23-123296-002**
5 Stud	14.93"	1	GM 15619954 / 15515786 / 15514470 / 15500326	141271 / 141584	D6054	54102P	E-4229	**23-122687-002**
10 Stud	15.00"	1	-	-	-	-	E-11470	**23-123550-004**
10 Stud	15.00"	1	-	-	-	-	-	**23-123644-002**
5 Stud	15.00"	1	ITE 3531661C1 / 2509073C1/ 3531661C2	141476	-	54769P	E-6114	**23-123573-004**
5 Stud	15.00"	1	-	-	-	-	-	**23-123648-002**
10 Stud	15.00"	1	-	-	-	-	-	**23-123552-004**
10 Stud	15.00"	1	-	-	-	-	-	**23-123649-002**
6 Stud	15.17"	1	GM 12472473	-	-	-	-	**23-123532-002**
10 Stud	15.38"	1	-	-	D6052	54102	E-11308	**23-123440-002**
10 Stud	15.38"	1	-	-	-	54251	E-11309	**23-123458-002**
10 Stud	15.38"	1	-	-	D6183	54771	E-11311	**23-123489-002**
10 Stud	15.38"	2	-	-	D6054C	54301	E-11327	**23-123433-002**
10 Stud	15.38"	1	GM 156199700 / 15514406 / 15514357	141272	D6052	54301P	E-4230	**23-122729-002**
10 Stud	15.380"	2	-	141606	-	-	-	**23-122693-002**
10 Stud	15.380"	2	FORD YC3Z-2C026BA	-	-	-	-	**23-123461-002**
10 Stud	15.380"	1	FORD YC3Z-2C26AA	-	-	-	-	**23-123498-002**
6 Stud	15.630"	1	ITE 589843C1 FORD YC3Z-1125AA	141273	-	54251P	E-4231	**23-123527-002**

HYDRAULIC DRUM BRAKE SHOE INDEX

Listed by FMSI Shoe Number

DRUM BRAKES — UNLINED SHOES (Sold Individually)

FMSI SHOE NO.	FMSI LINING NO.	MERITOR UNLINED SHOE NO.	BRAKE SIZE	BRAKE MANUFACTURER	AXLE POSITION	ADJUSTMENT	RETURN SPRING KIT
22	2041	—	14 1/8" x 3 1/2"	Bendix	Rear	Manual	**R40H500**
36	2043	—	13" x 2 1/4"	Bendix	Front	Manual	**R40H9210**
63	224A	—	14" x 2 1/4"	Bendix	Front	Manual	**R40H140**
235	1245A	**R700235**	15" x 3"	Wagner	Front	Manual	**R40H521**
296	1294	—	14" x 2 1/2"	Wagner	Front	Manual	**R40H9237**
299	2039	—	14" x 2 1/2"	General Motors	Front	Automatic	**R40H599**
321	1245C	**R700321**	15" x 3"	Wagner	Front	Automatic	**R40H521**
322	1280B	**—**	15" x 3 1/2"	Wagner	Front	Automatic	**R40H521**
325	1294A	—	14" x 2 1/2"	Wagner	Front	Automatic	**R40H521**
346	1252	**R700346**	15" x 5"	Wagner	Rear	Automatic	**R40H597**
361	2060 or 2060T	—	14" x 2 1/2"	Gunite(K-H)	Front	Automatic	**R40H596**
375	4645A	—	15" x 5"	Wagner	Rear	Manual	**R40H597**
376	4645A	—	15" X 4"	Wagner	Rear	Automatic	**R40H597**
377	1252	**Use R700346**	15" x 5"	Wagner	Rear	Manual	**R40H597**
379	1252	—	15" x 5"	Wagner	Rear	Automatic	**R40H597**
380	4596	**Use R700381**	15" x 6"	Wagner	Rear	Manual	**R40H597**
381	4596	**R700381**	15" x 6"	Wagner	Rear	Automatic	**R40H597**
382	4597	**Use R700383**	15" x 7"	Wagner	Rear	Manual	**R40H597**
383	4597	**R700383**	15" x 7"	Wagner	Rear	Automatic	**R40H597**
385	1254	—	16" x 5"	Wagner	Rear	Manual	**R40H597**
385	1254	—	16" x 5"	Wagner	Rear	Automatic	**R40H597**
385/386	1254 or 1255	**R40H9200**	16" x 5" or x 6"	Wagner	Rear	Automatic	**—**
386	1255	—	16" x 6"	Wagner	Rear	Manual	**R40H9200**
386	1255	—	16" x 6"	Wagner	Rear	Automatic	**R40H9200**
398	2060	—	14" x 2 1/2"	Bendix	Front	Automatic	**R40H140**
400	4646	**R700400**	15" x 5"	Gunite(K-H)	Rear	Automatic	**R40H595**
401	4647	**R700401**	15" x 4"	Gunite(K-H)	Rear	Automatic	**R40H595**
427	4640	**R700427**	15" x 4"	General Motors	Rear	Automatic	**R40H550**
442	4639	**R700442**	15" x 5"	General Motors	Rear	Automatic	**R40H550**
463	1280	**R700463**	15" x 3 1/2"	Wagner	Front	Manual	**R40H521**
490	1345	—	15" x 5"	Wagner	Front	Manual	**R40H596**
491	1345A	—	15" x 5"	Wagner	Front	Automatic	**R40H596**
542	4528A	**R40H9206**	15" x 5"	Lucas	Rear	Automatic	**SP7897/SP7896**
543	4504A	**R40H3500**	15" x 6"	Lucas	Rear	Automatic	**SP7897/SP7896**
544	4505A	**R40H3501**	15" x 7"	Lucas	Rear	Automatic	**SP7897/SP7896**

DRUM BRAKES — LINED SHOES (Sold 4 Per Set)

FMSI SHOE NO.	FMSI LINING NO.	MERITOR LINED SHOE SET NO.	BRAKE SIZE	VEHICLE MANUFACTURER	AXLE POSITION	ADJUSTMENT	RETURN SPRING KIT
169	2089T	—	10" x 2 1/2"	Ford	Rear	Automatic	**R40H102**
242	2117TT	—	9 1/2" x 2"	General Motors	Rear	Automatic	**R40H367**
263	2161TT	—	11 1/32" x 2 1/4"	Ford	Rear	Automatic	**R40H7225**
267	2012FT	—	10" x 1 3/4"	AMC/Jeep	Rear	Automatic	**R40H7064**
314	2140T,AT,B	**Use R46358**	12" x 3"	Bendix	Front & Rear	Automatic	**R40H546/ R40H608/R**
316	2146T,AT	**Use R46357**	12" x 2 1/2"	Bendix	Rear	Automatic	**R40H546**
357	2146AT	**R46357**	12" x 2 1/2"	Dodge	Rear	Automatic	**R40H547**
358	2140AT	**R46358**	12" x 3"	Dodge	Front & Rear	Automatic	**R40H547**
445	2089T	**R46445**	10" x 2 1/2"	Dodge	Rear	Automatic	**R40H102**
446	2025T	**R46446**	11" x 2 1/2"	Dodge	Rear	Automatic	**R40H111**
449	2159TT	**—**	11" x 2"	General Motors	Rear	Automatic	**R407046**
451	2042AT	**R46451**	13" x 2 1/2"	General Motors	Rear	Automatic	**R40H378**
452	2157T	**R46452**	13" x 3 1/2"	General Motors	Rear	Automatic	**R40H378**
473	2073T	**R46473**	11 11/64" x 2 3/4"	General Motors	Rear	Automatic	**R40H369**
481	2089AT	**—**	10" x 2 1/2"	Ford,Jeep	Rear	Automatic	**R40H7224/ R40H7149**
514	2117ATT	**—**	9 1/2" x 2"	General Motors	Rear	Automatic	**R40H367**
538	2168T	**R46538**	9" x 2 1/2"	Dodge	Rear	Automatic	**R40H133**
552	2165T	**—**	8 55/64" x 1 49/64"	General Motors	Rear	Automatic	**R40H7281**

HYDRAULIC DRUM BRAKE SHOE INDEX

Listed by FMSI Shoe Number

DRUM BRAKES — LINED SHOES (Sold 4 Per Set) (cont'd.)

FMSI SHOE NO.	FMSI LINING NO.	MERITOR LINED SHOE SET NO.	BRAKE SIZE	VEHICLE MANUFACTURER	AXLE POSITION	ADJUSTMENT	RETURN SPRING KIT
569	2151T	**R41569**	9" x 1 3/4"	Ford	Rear	Automatic	**R40H364**
581	2089AT	**R41581**	10" x 2 1/2"	Ford	Rear	Automatic	**R40H357**
582	2141AT	**R41582**	11 1/32" x 2 1/4"	Ford	Rear	Automatic	**R40H7225**
583	2171T	**R46583**	12 1/8" x 3 1/2"	Ford	Rear	Automatic	**R40H608**
593	1404	**R46593**	10" x 2 1/4"	General Motors	Rear	Automatic	**SP7897/SP7896**
705	2089AT	**R4612006**	10" x 2 1/2"	Ford	Rear	Automatic	

WAGNER BRAKE SHOE STAMPING NO. CROSS REFERENCE

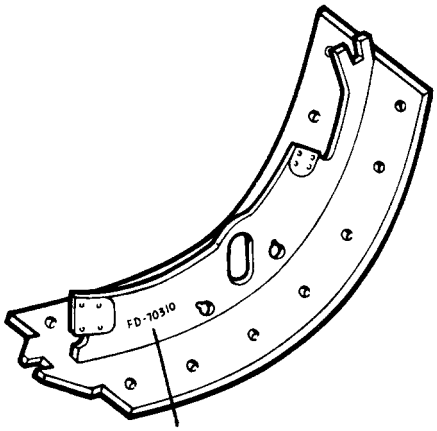

Wagner
Stamping No.
Location

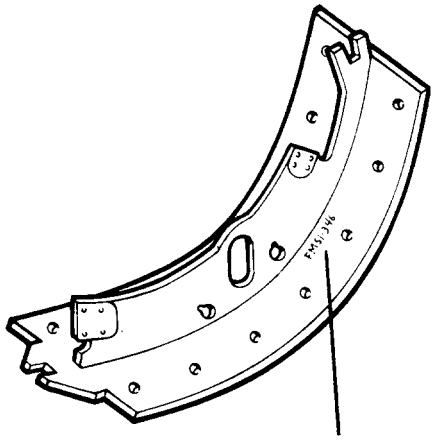

All Meritor Hydraulic Brake Shoes
Are Stamped with FMSI Shoe No.
On Table of Shoe.

WAGNER STAMPING NO.	FMSI STAMPING NO.	MERITOR SHOE NO.
FE3340	235	**R700235**
FE19143	377 (Use 346)	**R700346**
FE19297	99 (Use 385)	Not Available
FE19552	96	Not Available
FE25515	94 (Use 379)	Not Available
FE26270	380 (Use 381)	**R700381**
FE31197	382 (Use 383)	**R700383**
FE31993	134 (Use 235)	**R700235**
FE32479	463	**R700463**
FF55411	296	Not Available
FE57513	375 (Use 376)	Not Available

WAGNER STAMPING NO.	FMSI STAMPING NO.	MERITOR SHOE NO.
FE57763	321	**R700321**
FF57771	325	Not Available
FD70310	346	**R700346**
FD70311	381	**R700381**
FD70312	383	**R700383**
FD70320	385	Not Available
FD70321	386	Not Available
FE70330	376	Not Available
FD70331	379	Not Available
FE78029	361	Not Available
FE85053	491	Not Available
FE98140	490	Not Available

HYDRAULIC BRAKE SHOES

22

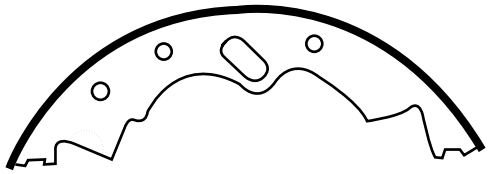

For Identification Only (Not Available)	FMSI SHOE NO.	FMSI LINING NO.	SIZE	RIVET
	22	2041	14 1/8" x 3 1/2"	7-6

63

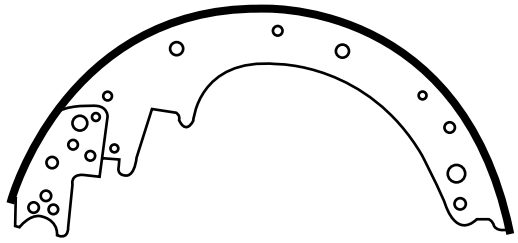

For Identification Only (Not Available)	FMSI SHOE NO.	FMSI LINING NO.	SIZE	RIVET
	63	224A	14" x 2 1/4"	4-6

235

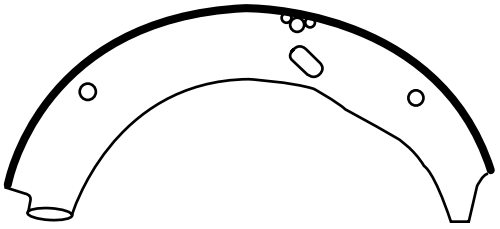

MERITOR SHOE NO.	FMSI SHOE NO.	FMSI LINING NO.	SIZE	RIVET
R700235 (US)	235	1245A	15" x 3"	7-6

263

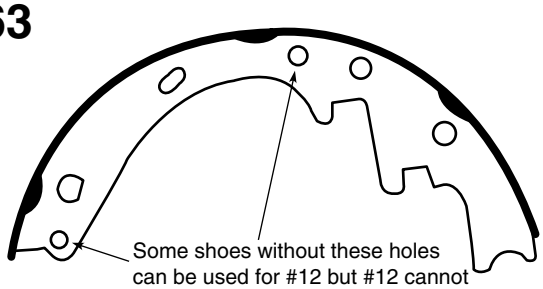

Sold 4 Per Set

For Identification Only (Not Available)	FMSI SHOE NO.	FMSI LINING NO.	SIZE	RIVET
	263	2161TT	11 1/32" x 2 1/4"	4-4

36

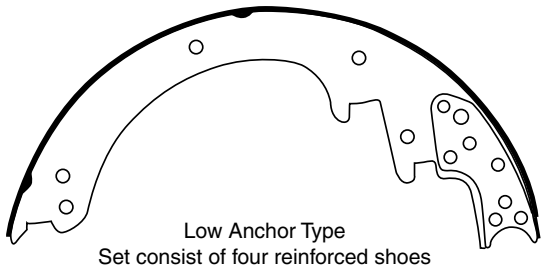

Low Anchor Type
Set consist of four reinforced shoes

For Identification Only (Not Available)	FMSI SHOE NO.	FMSI LINING NO.	SIZE	RIVET
	36	2043	13" x 2 1/4"	—

169

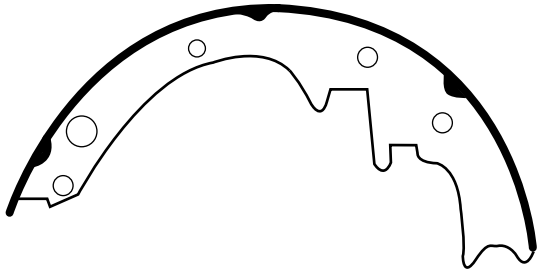

Sold 4 Per Set

For Identification Only (Not Available)	FMSI SHOE NO.	FMSI LINING NO.	SIZE	RIVET
	169	2089T	10" x 2 1/2"	4-4

242

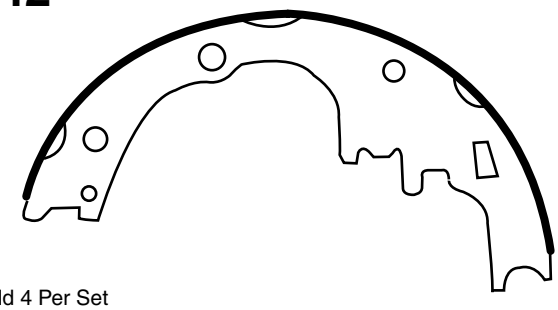

Sold 4 Per Set

For Identification Only (Not Available)	FMSI SHOE NO.	FMSI LINING NO.	SIZE	RIVET
	242	2117TT	9 1/2" x 2"	4-4

267

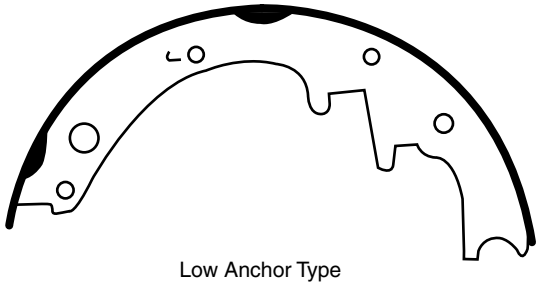

Low Anchor Type

Sold 4 Per Set

For Identification Only (Not Available)	FMSI SHOE NO.	FMSI LINING NO.	SIZE	RIVET
	267	2012FT	10" x 1 3/4"	4-4

HYDRAULIC BRAKE SHOES

296

Wagner Stamping
FF55411

Use 325

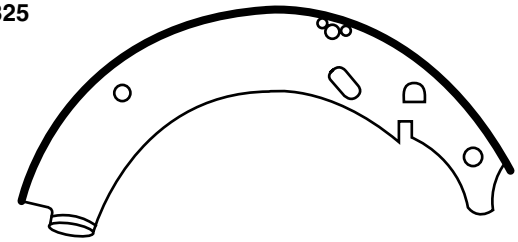

For Identification Only (Not Available)	FMSI SHOE NO.	FMSI LINING NO.	SIZE	RIVET
	296	1294	14" x 2 1/2"	7-

299

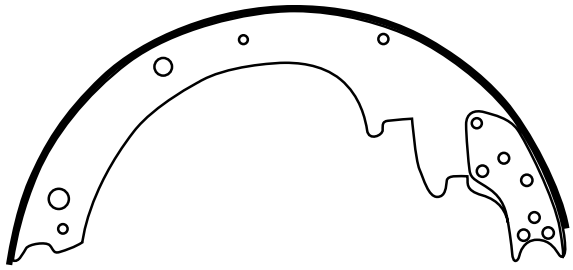

For Identification Only (Not Available)	FMSI SHOE NO.	FMSI LINING NO.	SIZE	RIVET
	299	2039	14" x 2 1/2"	—

314

Use 358

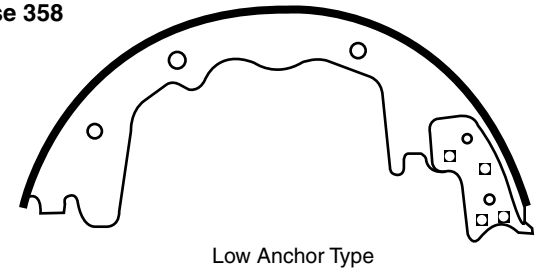

Low Anchor Type

MERITOR SHOE NO.	FMSI SHOE NO.	FMSI LINING NO.	SIZE	RIVET
R46358	314	2140T, 2140AT, 2140BT	12" x 3"	4-5

316

Use 357

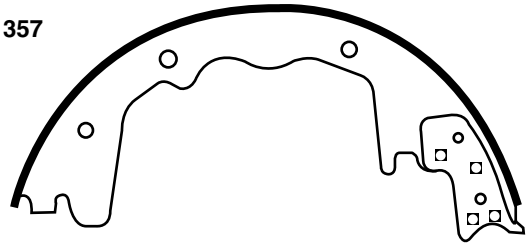

Low Anchor Type

MERITOR SHOE NO.	FMSI SHOE NO.	FMSI LINING NO.	SIZE	RIVET
R46357	316	2146T, 2146AT	12" x 2 1/2"	4-5

321

Wagner Stamping
FE57763

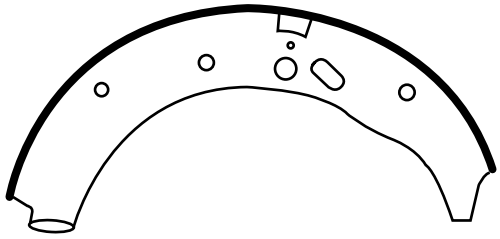

MERITOR SHOE NO.	FMSI SHOE NO.	FMSI LINING NO.	SIZE	RIVET
R700321 (US)	321	1245C	15" x 3"	7-6

322

Wagner Stamping
FE59210

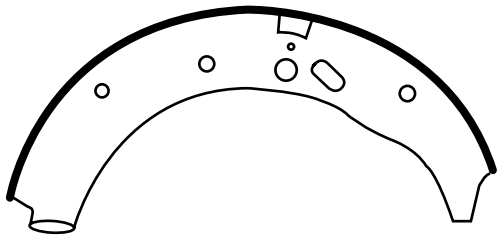

For Identification Only (Not Available)	FMSI SHOE NO.	FMSI LINING NO.	SIZE	RIVET
	322	1280B	15" x 3 1/2"	7-6

325

Wagner Stamping
FF57771

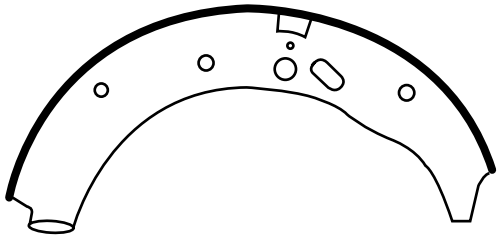

Fits 1 1/8" and 1 1/4" FWC

For Identification Only (Not Available)	FMSI SHOE NO.	FMSI LINING NO.	SIZE	RIVET
	325	1294A	14" x 2 1/2"	7-

346

Wagner Stamping
FD70310

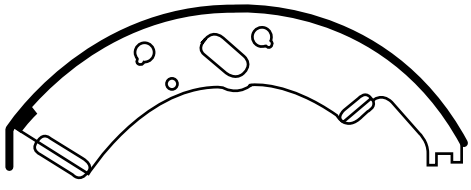

(Re-inforced Anchors)
#346 with adjuster hold can be used for #377

MERITOR SHOE NO.	FMSI SHOE NO.	FMSI LINING NO.	SIZE	RIVET
R700346 (US)	346	1252	15" x 5"	8-7

HYDRAULIC BRAKE SHOES

357

Old 316

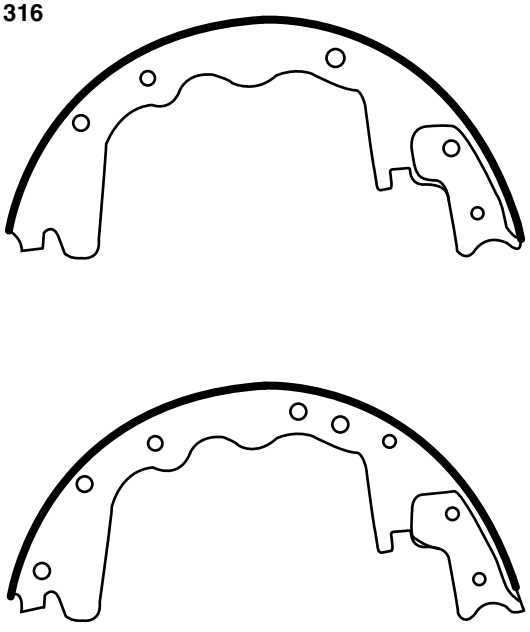

Low Anchor Type

Sold 4 Per Set

MERITOR SHOE NO.	FMSI SHOE NO.	FMSI LINING NO.	SIZE	RIVET
R46357 (LS)	357	2146AT	12" x 2 1/2"	4-5

358

Old 314

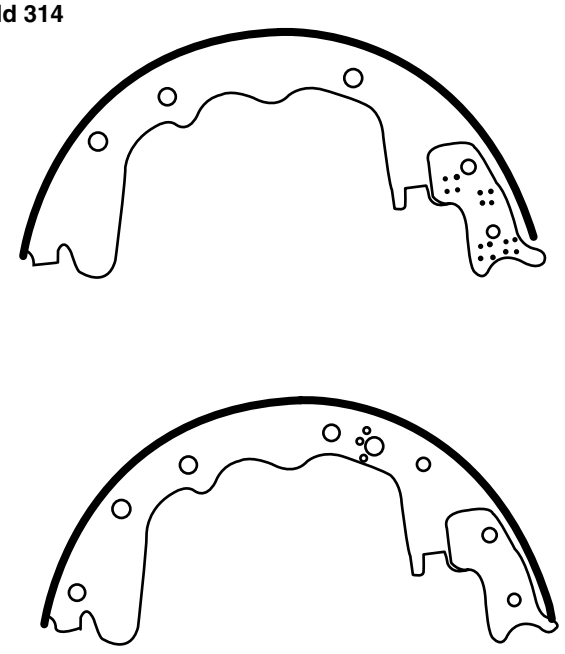

Low Anchor Type

Sold 4 Per Set

MERITOR SHOE NO.	FMSI SHOE NO.	FMSI LINING NO.	SIZE	RIVET
R46358 (LS)	358	2140AT	12" x 3"	4-5

361

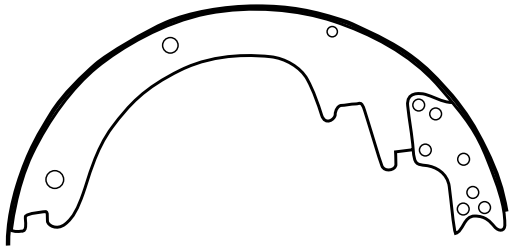

For Identification Only (Not Available)	FMSI SHOE NO.	FMSI LINING NO.	SIZE	RIVET
	361	2060 2060T	14 x 2 1/2"	—

375

Wagner Stamping
FE57513

Use 376

For Identification Only (Not Available)	FMSI SHOE NO.	FMSI LINING NO.	SIZE	RIVET
	375	4645A	15" x 4"	8-

376

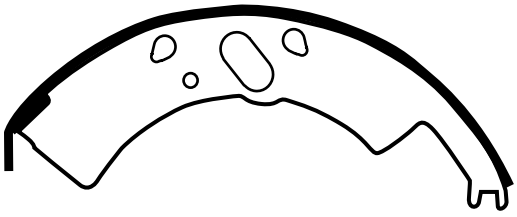

For Identification Only (Not Available)	FMSI SHOE NO.	FMSI LINING NO.	SIZE	RIVET
	376	4645A	15 x 4"	8-

377

Wagner Stamping
FE19143

Use 346

MERITOR SHOE NO.	FMSI SHOE NO.	FMSI LINING NO.	SIZE	RIVET
R700346	377	1252	15" x 5"	8-7

HYDRAULIC BRAKE SHOES

379

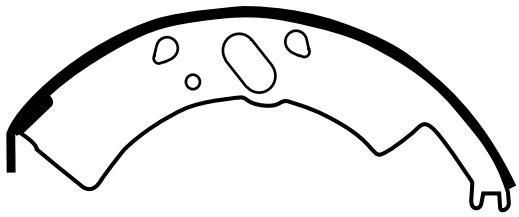

For Identification Only (Not Available)	FMSI SHOE NO.	FMSI LINING NO.	SIZE	RIVET
	379	1252	15" x 5"	8-7

380

Wagner Stamping
FE26270

Use 381

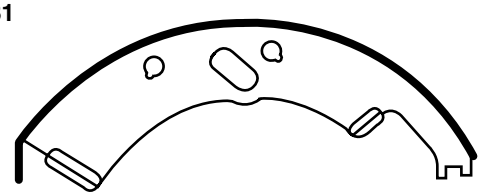

MERITOR SHOE NO.	FMSI SHOE NO.	FMSI LINING NO.	SIZE	RIVET
R700381	380	4596	15" x 6"	8-9

381

Wagner Stamping
FD70311

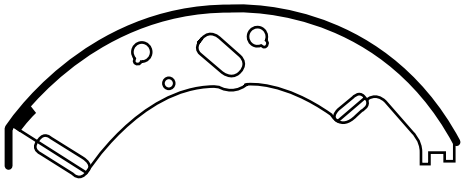

#381 with adjuster holes can be used for #380

MERITOR SHOE NO.	FMSI SHOE NO.	FMSI LINING NO.	SIZE	RIVET
R700381 (US)	381	4596	15" x 6"	8-9

382

Wagner Stamping
FE31197

Use 383

MERITOR SHOE NO.	FMSI SHOE NO.	FMSI LINING NO.	SIZE	RIVET
R46382	382	4597	15" x 7"	8-9

383

Wagner Stamping
FD70312

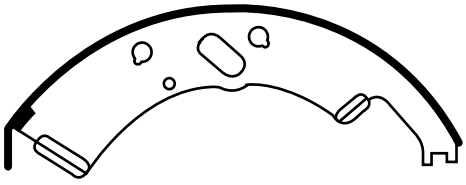

#383 with adjuster holes can be used for #382

MERITOR SHOE NO.	FMSI SHOE NO.	FMSI LINING NO.	SIZE	RIVET
R46383 (US)	383	4597	15" x 7"	8-9

385

Wagner Stamping
FD70320

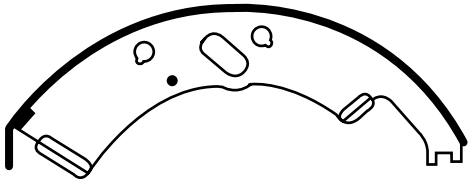

#385 with adjuster holes can be used for #99

For Identification Only (Not Available)	FMSI SHOE NO.	FMSI LINING NO.	SIZE	RIVET
	385	1254	16" x 5"	8-

386

Wagner Stamping
FD70321

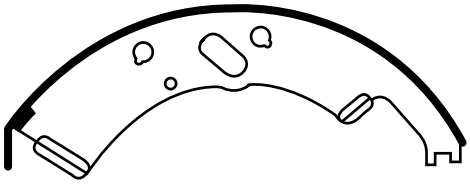

#386 with adjuster holes can be used for #96

For Identification Only (Not Available)	FMSI SHOE NO.	FMSI LINING NO.	SIZE	RIVET
	386	1225	16" x 6"	8-7

398

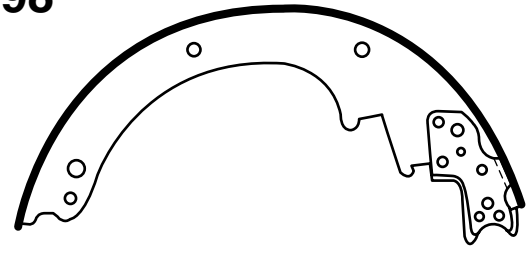

For Identification Only (Not Available)	FMSI SHOE NO.	FMSI LINING NO.	SIZE	RIVET
	398	2060	14" x 2 1/2"	7-6

HYDRAULIC BRAKE SHOES

400

MERITOR SHOE NO.	FMSI SHOE NO.	FMSI LINING NO.	SIZE	RIVET
R700400 (US)	400	4646	15" x 5"	7-6

401

MERITOR SHOE NO.	FMSI SHOE NO.	FMSI LINING NO.	SIZE	RIVET
R700401 (US)	401	4647	15" x 4"	7-6

402

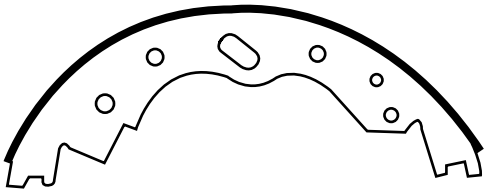

MERITOR SHOE NO.	FMSI SHOE NO.	FMSI LINING NO.	SIZE	RIVET
Discont'd. (US)	402	2032	15" x 4"	7-7

427

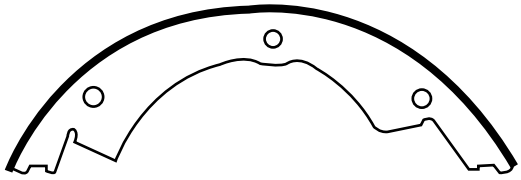

MERITOR SHOE NO.	FMSI SHOE NO.	FMSI LINING NO.	SIZE	RIVET
R700427 (US)	427	4640	15" x 4"	7-7

442

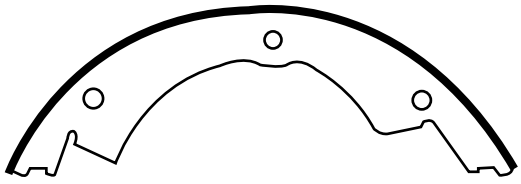

MERITOR SHOE NO.	FMSI SHOE NO.	FMSI LINING NO.	SIZE	RIVET
R700442 (US)	442	4639	15" x 5"	7-7

445

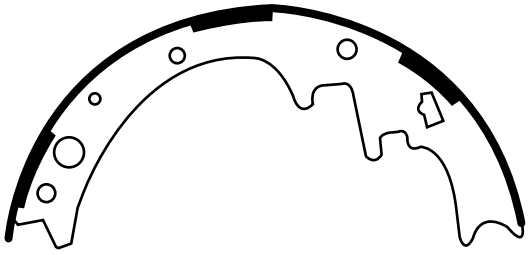

Sold 4 Per Set

MERITOR SHOE NO.	FMSI SHOE NO.	FMSI LINING NO.	SIZE	RIVET
R46445 (LS)	445	2089T	10" x 2 1/2"	4-4

446

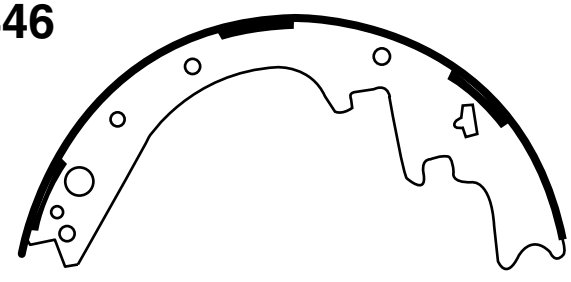

Sold 4 Per Set

MERITOR SHOE NO.	FMSI SHOE NO.	FMSI LINING NO.	SIZE	RIVET
R46446 (LS)	446	2025T	11" x 2 1/2"	Bonded

449

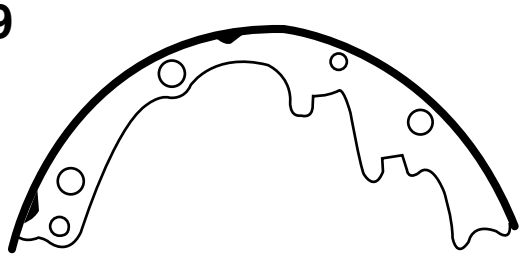

Sold 4 Per Set

MERITOR SHOE NO.	FMSI SHOE NO.	FMSI LINING NO.	SIZE	RIVET
R46449 (LS)	449	2159TT	11" x 2"	4-5

Brake Shoe Code: LS = Lined Set; US = Unlined Shoe

HYDRAULIC BRAKE SHOES

451

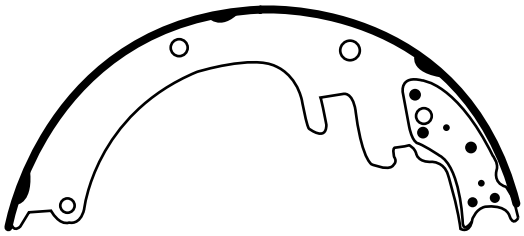

Sold 4 Per Set

MERITOR SHOE NO.	FMSI SHOE NO.	FMSI LINING NO.	SIZE	RIVET
R46451 (LS)	451	2042AT	13" x 2 1/2"	7-6

452

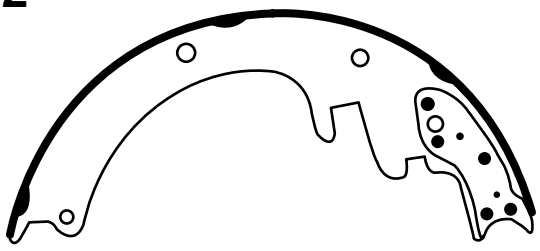

Sold 4 Per Set

MERITOR SHOE NO.	FMSI SHOE NO.	FMSI LINING NO.	SIZE	RIVET
R46452 (LS)	452	2157T	13" x 3 1/2"	7-6

462

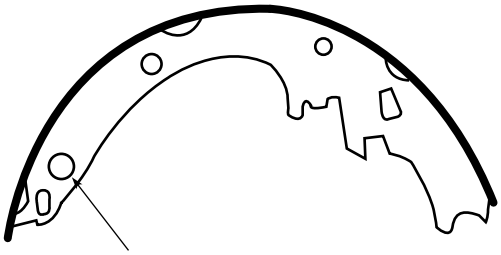

Some shoes produced without this hole
Delco-Moraine Design

Sold 4 Per Set

MERITOR SHOE NO.	FMSI SHOE NO.	FMSI LINING NO.	SIZE	RIVET
R46462 (LS)	462	2134ATT	11" x 2"	4-4

463

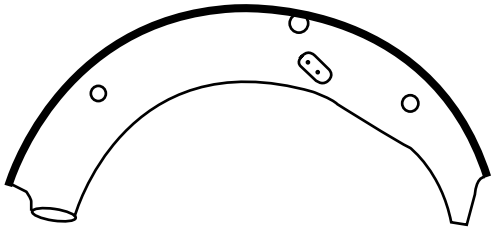

MERITOR SHOE NO.	FMSI SHOE NO.	FMSI LINING NO.	SIZE	RIVET
R700463 (US)	463	1280	15" x 3 1/2"	7-6

473

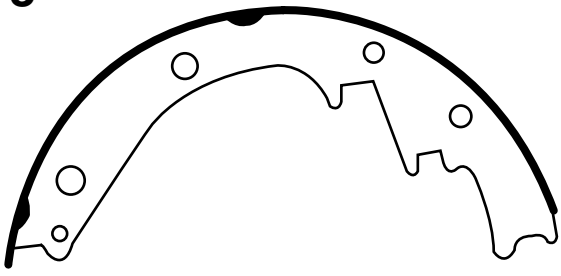

Sold 4 Per Set

MERITOR SHOE NO.	FMSI SHOE NO.	FMSI LINING NO.	SIZE	RIVET
R46473 (LS)	473	2073T	11 11/64" x 2 3/4"	5-

481

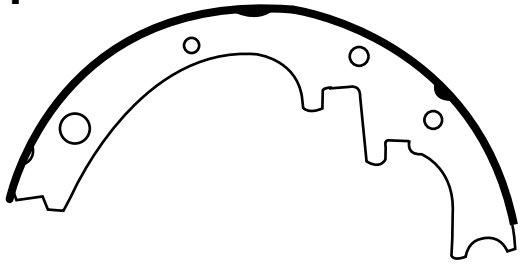

Sold 4 Per Set

MERITOR SHOE NO.	FMSI SHOE NO.	FMSI LINING NO.	SIZE	RIVET
R46481 (LS)	481	2089AT	10" x 2 1/2"	4-4

490

Wagner Stamping
FE98140

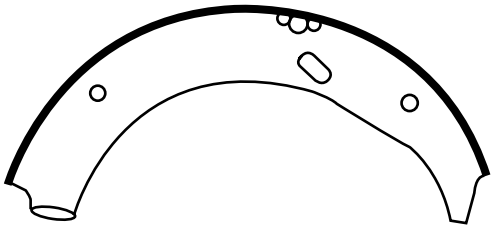

For Identification Only (Not Available)	FMSI SHOE NO.	FMSI LINING NO.	SIZE	RIVET
	490	1345	15" x 5"	8-6

491

Wagner Stamping
FE85053

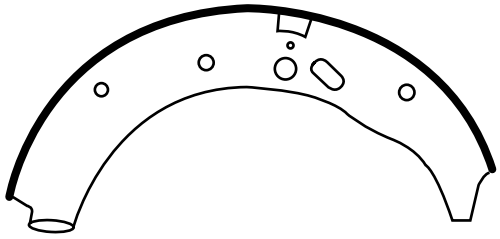

For Identification Only (Not Available)	FMSI SHOE NO.	FMSI LINING NO.	SIZE	RIVET
	491	1345A	15" x 5"	8-6

HYDRAULIC BRAKE SHOES

514

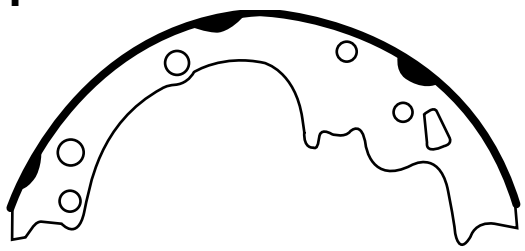

Sold 4 Per Set

MERITOR SHOE NO.	FMSI SHOE NO.	FMSI LINING NO.	SIZE	RIVET
R46514 (LS)	514	2117ATT	9 1/2" x 2"	4-4

538

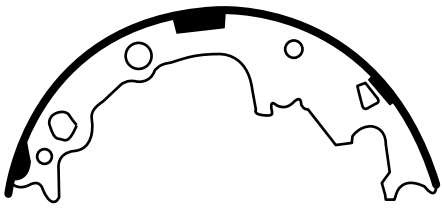

Sold 4 Per Set

MERITOR SHOE NO.	FMSI SHOE NO.	FMSI LINING NO.	SIZE	RIVET
R46538 (LS)	538	2168T	9" x 2 1/2"	3mm

542

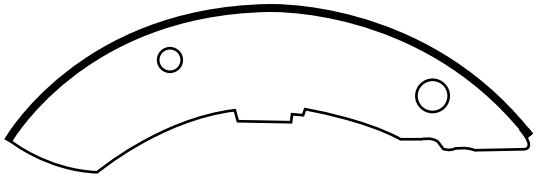

MERITOR SHOE NO.	FMSI SHOE NO.	FMSI LINING NO.	SIZE	RIVET
R40H9206 (US)	542	4528A	15" x 5"	10-8

543

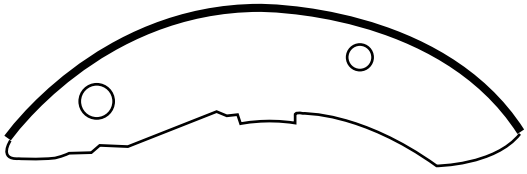

MERITOR SHOE NO.	FMSI SHOE NO.	FMSI LINING NO.	SIZE	RIVET
R40H3500 (US)	543	4504A	15" x 6"	10-8

544

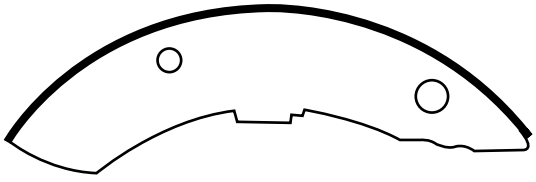

MERITOR SHOE NO.	FMSI SHOE NO.	FMSI LINING NO.	SIZE	RIVET
R40H3501 (US)	544	4505A	15" x 7"	10-8

552

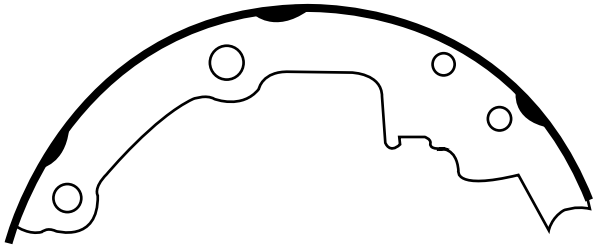

Sold 4 Per Set

For Identification Only (Not Available)	FMSI SHOE NO.	FMSI LINING NO.	SIZE	RIVET
	552	2165T	$8\frac{55}{64}$" x $1\frac{49}{64}$"	4-4

569

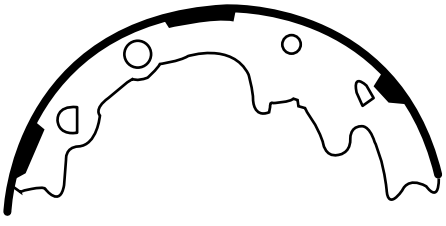

Sold 4 Per Set

MERITOR SHOE NO.	FMSI SHOE NO.	FMSI LINING NO.	SIZE	RIVET
R41569 (LS)	569	2151T	9" x 1 3/4"	4-4

581

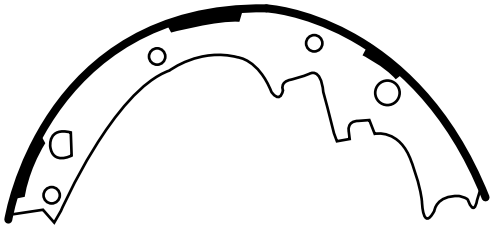

Sold 4 Per Set

MERITOR SHOE NO.	FMSI SHOE NO.	FMSI LINING NO.	SIZE	RIVET
R41581 (LS)	581	2089AT	10" x 2 1/2"	4-4

Brake Shoe Code: LS = Lined Set; US = Unlined Shoe

HYDRAULIC BRAKE SHOES

582

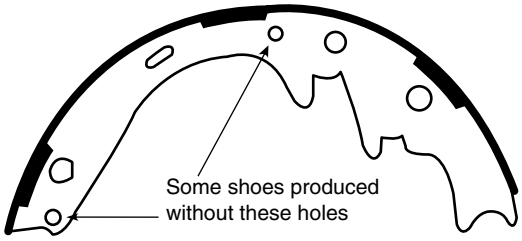

Sold 4 Per Set

MERITOR SHOE NO.	FMSI SHOE NO.	FMSI LINING NO.	SIZE	RIVET
R41582 (LS)	582	2141AT	11 1/32" x 2 1/4"	4-5

593

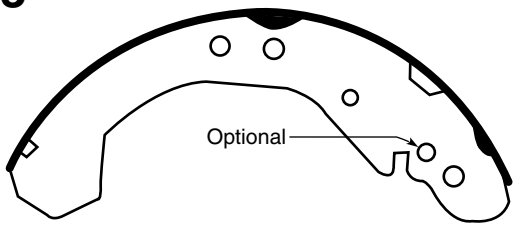

Sold 4 Per Set

MERITOR SHOE NO.	FMSI SHOE NO.	FMSI LINING NO.	SIZE	RIVET
R46593 (LS)	593	1404	10" x 2 1/4"	—

705

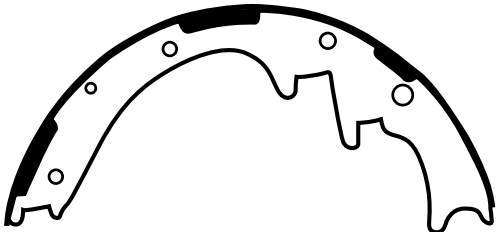

Sold 4 Per Set

MERITOR SHOE NO.	FMSI SHOE NO.	FMSI LINING NO.	SIZE	RIVET
R46705 (LS)	705	2089AT	10" x 2 1/2"	—

583

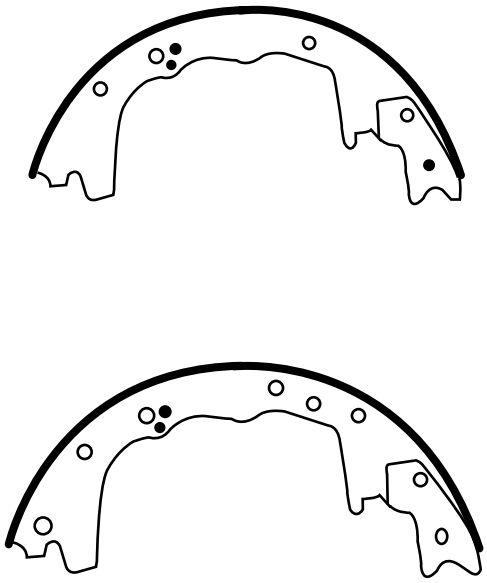

Sold 4 Per Set

MERITOR SHOE NO.	FMSI SHOE NO.	FMSI LINING NO.	SIZE	RIVET
R46583 (LS)	583	2171T	12 1/8" x 3 1/2"	Bonded

NOTES

WHEEL CYLINDER CASTING NUMBER INDEX

WHEEL CYLINDER CASTING NO.	MERITOR WHEEL CYLINDER NO.	PAGE NO.
0	**R4133916**	6-120
45	**R4133916**	6-120
65	**R4133915**	6-121
383	**R4133540**	6-118
519	**R4133002**	6-117
519	**R4133003**	6-117
519	**R4133725**	6-118
519	**R4133726**	6-118
520	**R4133608**	6-117
521	**R4133791**	6-119
521	**R4133792**	6-119
565	**R4133004**	6-117
565	**R4133005**	6-117
565	**R4133230**	6-115
565	**R4133231**	6-115
565	**R4133278**	6-112
565	**R4133279**	6-113
565	**R4133627**	6-114
565	**R4133628**	6-114
566	**R4133540**	6-118
566	**R4133541**	6-118
566	**R4133791**	6-119
566	**R4133792**	6-119
572	**R4133315**	6-126
572	**R4133320**	6-122
572	**R4133379**	6-126
572	**R4133581**	6-126
572	**R4133714**	6-121
572	**R4133716**	6-121
572	**R4133717**	6-121
572	**R4133718**	6-121
572	**R4133720**	6-126
572	**R4133722**	6-126
573	**R4133321**	6-122
573	**R4133582**	6-126
573	**R4133715**	6-121
573	**R4133716**	6-121
573	**R4133717**	6-121
573	**R4133719**	6-121
573	**R4133721**	6-126
573	**R4133723**	6-126
574	**R4133256**	6-127
574	**R4133257**	6-127
598	**R4133338**	6-129
599	**R4133336**	6-128
599	**R4133580**	6-127
601	**R4133420**	6-132
601	**R4133584**	6-112
604	**R4133400**	6-131
637	**R4133851**	6-112
637	**R4133904**	6-113
638	**R4133407**	6-113
639	**R4133406**	6-113
640	**R4133390**	6-127
650	**R4133206**	6-123
650	**R4133485**	6-120
650	**R4133485**	6-120
650	**R4133615**	6-122
650	**R4133916**	6-120
650	**R4133946**	6-124
651	**R4133206**	6-123
651	**R4133207**	6-123
651	**R4133484**	6-120
651	**R4133484**	6-120
651	**R4133614**	6-122
651	**R4133915**	6-121
651	**R4133945**	6-124
656	**R4133366**	6-115
657	**R4133367**	6-115
670	**R4133376**	6-124
670	**R4133379**	6-126
671	**R4133377**	6-124
671	**R4133380**	6-126
700	**R4133447**	6-114
705	**R4133597**	6-116
710	**R4133469**	6-116
725	**R4133606**	6-130
725	**R4133607**	6-127
737	**R4133655**	6-128
738	**R4133656**	6-128
743	**R4133637**	6-116
743	**R4133638**	6-116
747	**R4133709**	6-119
748	**R4133708**	6-124
776	**R4133858**	6-112
779	**R4133891**	6-112
779	**R4133892**	6-113
784	**R4133930**	6-113
1430	**R4133278**	6-112
3067	**R4133315**	6-126
3067	**R4133320**	6-122
3067	**R4133714**	6-121
3067	**R4133716**	6-121
3067	**R4133718**	6-121
3068	**R4133316**	6-126
3068	**R4133321**	6-122
3068	**R4133715**	6-121
3068	**R4133717**	6-121
3068	**R4133719**	6-121
3069	**R4133315**	6-126
3069	**R4133320**	6-122
3069	**R4133581**	6-126
3069	**R4133714**	6-121
3069	**R4133716**	6-121
3069	**R4133718**	6-121
3069	**R4133720**	6-126
3070	**R4133316**	6-126
3070	**R4133321**	6-122
3070	**R4133582**	6-126
3070	**R4133715**	6-121
3070	**R4133717**	6-121
3070	**R4133719**	6-121
3070	**R4133721**	6-126
6122	**R4133608**	6-117
7565	**R4133002**	6-117
7565	**R4133003**	6-117
7565	**R4133725**	6-118
7565	**R4133726**	6-118
8300	**R4133206**	6-123
8300	**R4133207**	6-123
8301	**R4133206**	6-123
8301	**R4133207**	6-123
9023	**R4133230**	6-115
9023	**R4133231**	6-115
9023	**R4133278**	6-112
9023	**R4133279**	6-113
9023	**R4133627**	6-114
9023	**R4133628**	6-114
9027	**R4133627**	6-114
9027	**R4133628**	6-114
16925	**R4133256**	6-127
16925	**R4133257**	6-127
18292	**R4133206**	6-123
18292	**R4133915**	6-121
18292	**R4133945**	6-124
18293	**R4133207**	6-123
18293	**R4133916**	6-120
18293	**R4133946**	6-124
19108	**R4133338**	6-129
20934	**R4133257**	6-127
29266	**R4133316**	6-126
29266	**R4133715**	6-121
29266	**R4133717**	6-121
29266	**R4133719**	6-121
29268	**R4133315**	6-126
29268	**R4133714**	6-121
29268	**R4133716**	6-121
29268	**R4133718**	6-121
29390	**R4133366**	6-115
29391	**R4133367**	6-115
29541	**R4133606**	6-130
30506	**R4133584**	6-132
30525	**R4133791**	6-119
30525	**R4133792**	6-119
30575	**R4133893**	6-112
38767	**R4133004**	6-117
38767	**R4133005**	6-117
38767	**R4133230**	6-115
38767	**R4133231**	6-115
49024	**R4133230**	6-115
49024	**R4133231**	6-115
49024	**R4133627**	6-114
49024	**R4133628**	6-114
49194	**R4133627**	6-114
49194	**R4133628**	6-114
55729	**R4133607**	6-127
55753	**R4133606**	6-130
61690	**R4133485**	6-120
73535	**R4133315**	6-126
302862	**R4133256**	6-127
302862	**R4133257**	6-127
302862	**R4133540**	6-118
302862	**R4133607**	6-127
306246	**R4133004**	6-117
306246	**R4133005**	6-117
306246	**R4133231**	6-115
306246	**R4133278**	6-112
306246	**R4133279**	6-113
306246	**R4133627**	6-114
306246	**R4133628**	6-114
616173	**R4133725**	6-118
616173	**R4133726**	6-118
616173	**R4133791**	6-119
616173	**R4133792**	6-119
616189	**R4133484**	6-120
616190	**R4133485**	6-120
616401	**R4133002**	6-117
616401	**R4133003**	6-117
617451	**R4133206**	6-123
617452	**R4133207**	6-123
617629	**R4133485**	6-120
618306	**R4133315**	6-126
618306	**R4133320**	6-122
618306	**R4133714**	6-121
618306	**R4133716**	6-121
618306	**R4133718**	6-121
618307	**R4133316**	6-126
618307	**R4133321**	6-122
618307	**R4133715**	6-121
618307	**R4133717**	6-121
618307	**R4133719**	6-121
618316	**R4133338**	6-129
618331	**R4133315**	6-126
618331	**R4133714**	6-121
618331	**R4133716**	6-121
618331	**R4133718**	6-121
618372	**R4133338**	6-129
618378	**R4133336**	6-128
618383	**R4133336**	6-128
618424	**R4133002**	6-117
618424	**R4133003**	6-117
618424	**R4133725**	6-118
618424	**R4133726**	6-118
618424	**R4133791**	6-119
618424	**R4133792**	6-119
618797	**R4133380**	6-126
618826	**R4133406**	6-113
618827	**R4133407**	6-113
618851	**R4133376**	6-124
618852	**R4133377**	6-124
618878	**R4133447**	6-114
2231032	**R4133851**	6-112
2231365	**R4133791**	6-119
2231365	**R4133792**	6-119
2621301	**R4133708**	6-124
2621301	**R4133709**	6-119
2621302	**R4133709**	6-119
2966341	**R4133338**	6-129
3461777	**R4134064**	6-113
5450470	**R4133608**	6-117
5450646	**R4133206**	6-123
5450646	**R4133207**	6-123
5450649	**R4133002**	6-117
5450649	**R4133003**	6-117
5450649	**R4133725**	6-118
5450649	**R4133726**	6-118

(Continued on next page)

WHEEL CYLINDER CASTING NUMBER INDEX (Cont'd.)

WHEEL CYLINDER CASTING NO.	MERITOR WHEEL CYLINDER NO.	PAGE NO.
5450650	**R4133002**	6-117
5450650	**R4133725**	6-118
5450650	**R4133726**	6-118
5450822	**R4133206**	6-123
5450822	**R4133207**	6-123
5453785	**R4133725**	6-118
5453785	**R4133726**	6-118
5453821	**R4133206**	6-123
5453822	**R4133206**	6-123
5453822	**R4133207**	6-123
5455478	**R4133207**	6-123
5455479	**R4133206**	6-123
5456994	**R4133206**	6-123
5456995	**R4133207**	6-123
5459229	**R4133407**	6-113
5459230	**R4133406**	6-113
5459231	**R4133407**	6-113
5459232	**R4133406**	6-113
5459465	**R4133469**	6-116
5461444	**R4133230**	6-115
5461444	**R4133231**	6-115
5461454	**R4133004**	6-117
5461454	**R4133005**	6-117
5461572	**R4133627**	6-114
5461572	**R4133628**	6-114
5461581	**R4133206**	6-123
5461581	**R4133207**	6-123
5461582	**R4133206**	6-123
5461582	**R4133207**	6-123
5461734	**R4133257**	6-127
5461734	**R4133390**	6-127
5463023	**R4133614**	6-122
5463024	**R4133615**	6-122
5463082	**R4133366**	6-115
5463082	**R4133367**	6-115
5463083	**R4133366**	6-115
5463083	**R4133367**	6-115
5464077	**R4133447**	6-114
5464079	**R4133447**	6-114
5465656	**R4133469**	6-116
5471641	**R4133655**	6-128
5471642	**R4133656**	6-128
5473638	**R4133655**	6-128
18002371	**R4133891**	6-112
18002371	**R4133891**	6-112
18002371	**R4133892**	6-114
18002371	**R4133892**	6-114
18002625	**R4133891**	6-112
18002625	**R4133891**	6-112
18002625	**R4133892**	6-114
18002625	**R4133892**	6-114
29662656	**R4133607**	6-127
29662667	**R4133338**	6-129
29662667	**R4133400**	6-131
29663197	**R4133607**	6-127
29663349	**R4133400**	6-131
29663614	**R4133230**	6-115
29663615	**R4133004**	6-117
29663644	**R4133708**	6-124
29663657	**R4133206**	6-123
29663657	**R4133207**	6-123
29663673	**R4133207**	6-123
29663673	**R4133958**	6-112
29664505	**R4133004**	6-117
68660520	**201183**	6-131
68660520	**201185**	6-130
68660521	**201184**	6-131
68660521	**201186**	6-130
68660579	**201179**	6-131
68660579	**201181**	6-130
68660580	**201180**	6-131
68660580	**201182**	6-130
085.W	**R4133891**	6-112
085.W	**R4133892**	6-114
085W	**R4133892**	6-114
19541C	**R4133606**	6-130
2338C	**R4133207**	6-123
29337C	**R4133206**	6-123
29339C	**R4133407**	6-113
29340C	**R4133406**	6-113
29367C	**R4133615**	6-122
29452C	**R4133447**	6-114
29471C	**R4133469**	6-116
29477-C	**R4134064**	6-113
29538C	**R4133607**	6-127
29634C	**R4133709**	6-119
303889L	**R4133206**	6-123
303889R	**R4133207**	6-123
303890R	**R4133207**	6-123
304930L	**R4133206**	6-123
304931R	**R4133207**	6-123
30564S	**R4133892**	6-114
30564-S	**R4133891**	6-112
30564-S	**R4133892**	6-114
30565S	**R4133892**	6-114
30565-S	**R4133891**	6-112
30565-S	**R4133892**	6-114
30615-C	**R4134064**	6-113
3070C7	**R4133582**	6-126
41-TV152656K		
	R4133655	6-128
616190R	**R4133485**	6-120
616931L	**R4133206**	6-123
616932R	**R4133207**	6-123
618896L	**R4133366**	6-115
618897R	**R4133366**	6-115
618897R	**R4133367**	6-115
8A2192	**R4133279**	6-113
8M2192A2	**R4133004**	6-117
8M2192A2	**R4133005**	6-117
A22667	**R4133400**	6-131
AD2180A	**R4133207**	6-123
AD2181A	**R4133206**	6-123
AD2181A	**R4133207**	6-123
AD2190A	**R4133207**	6-123
AD2191A	**R4133206**	6-123
C10	**R4133320**	6-122
C3	**R4133721**	6-126
C30A2190C		
	R4133946	6-124
C30A2190C		
	R4133916	6-120
C30A2191C		
	R4133484	6-120
C30A2191C		
	R4133945	6-124
C30A2191C		
	R4133915	6-120
C5	**R4133715**	6-121
C5	**R4133717**	6-121
C5	**R4133719**	6-121
C5	**R4133720**	6-126
CW908J	**R4133406**	6-113
CW909G	**R4133407**	6-113
FD101605	**R4133851**	6-112
FD101605	**R4133904**	6-113
FD107134	**R4133709**	6-119
FD108361	**R4133708**	6-124
FD108361	**R4133709**	6-119
FD108937	**R4133708**	6-124
FD116367	**R4133958**	6-112
FD119588	**R4133858**	6-112
FD120503	**R4133958**	6-112
FD120768	**R4134047**	6-118
FD120808	**R4133961**	6-124
FD120808	**R4133962**	6-123
FD122380	**R4133930**	6-113
FD122380	**R4134028**	6-114
FD13292	**R4133206**	6-123
FD13368	**R4133540**	6-118
FD13369	**R4133541**	6-118
FD13370	**R4133540**	6-118
FD13370	**R4133541**	6-118
FD13370	**R4133791**	6-119
FD13370	**R4133792**	6-119
FD14495	**R4133206**	6-123
FD14495	**R4133207**	6-123
FD16925	**R4133256**	6-127
FD16925	**R4133257**	6-127
FD18292	**R4133206**	6-123
FD18292	**R4133207**	6-123
FD18293	**R4133206**	6-123
FD18293	**R4133207**	6-123
FD19106	**R4133336**	6-128
FD19106	**R4133580**	6-127
FD19108	**R4133338**	6-129
FD19110	**R4133400**	6-131
FD19112	**R4133420**	6-132
FD19112	**R4133584**	6-132
FD24491	**R4133338**	6-129
FD27340	**R4133206**	6-123
FD27341	**R4133207**	6-123
FD2749	**R4133002**	6-117
FD2749	**R4133003**	6-117
FD2749	**R4133725**	6-118
FD2749	**R4133726**	6-118
FD2751	**R4133791**	6-119
FD2751	**R4133792**	6-119
FD28663	**R4133390**	6-127
FD35436	**R4133406**	6-113
FD35437	**R4133407**	6-113
FD35438	**R4133206**	6-123
FD35439	**R4133207**	6-123
FD38767	**R4133628**	6-114
FD40201	**R4133278**	6-112
FD40201	**R4133279**	6-113
FD40202	**R4133279**	6-113
FD40951	**R4133615**	6-122
FD40952	**R4133615**	6-122
FD41766	**R4133484**	6-120
FD41766	**R4133614**	6-122
FD41767	**R4133485**	6-120
FD41767	**R4133615**	6-122
FD45932	**R4133945**	6-124
FD45968	**R4133945**	6-124
FD4805	**R4133725**	6-118
FD4805	**R4133726**	6-118
FD49333	**R4133851**	6-112
FD49333	**R4133904**	6-113
FD49391	**R4133447**	6-114
FD54381	**R4133469**	6-116
FD54390	**R4133469**	6-116
FD54697	**R4133469**	6-116
FD57583	**R4133004**	6-117
FD57584	**R4133005**	6-117
FD59238	**R4133004**	6-117
FD59238	**R4133230**	6-115
FD59238	**R4133231**	6-115
FD59238	**R4133627**	6-114
FD59238	**R4133628**	6-114
FD59256	**R4133230**	6-115
FD6122	**R4133608**	6-117
FD73535	**R4133581**	6-126
FD73535	**R4133722**	6-126
FD73536	**R4133582**	6-126
FD73536	**R4133723**	6-126
FD83584	**R4133655**	6-128
FD83585	**R4133656**	6-128
FD8852	**R4133320**	6-122
FD8853	**R4133321**	6-122
FD9023	**R4133627**	6-114
FD9023	**R4133628**	6-114
FD9027	**R4133004**	6-117
FD9028	**R4133005**	6-117
FD9059	**R4133627**	6-114
FD9059	**R4133628**	6-114
FD9060	**R4133004**	6-117
FD9060	**R4133005**	6-117
FD9336	**R4133002**	6-117
FD9337	**R4133003**	6-117
FE101605	**R4133851**	6-112
FE122380	**R4134028**	6-114
FE3067	**R4133315**	6-126
FE3067	**R4133320**	6-122
FE3067	**R4133714**	6-121
FE3067	**R4133716**	6-121

(Continued on next page)

WHEEL CYLINDER CASTING NUMBER INDEX (Cont'd.)

WHEEL CYLINDER CASTING NO.	MERITOR WHEEL CYLINDER NO.	PAGE NO.	WHEEL CYLINDER CASTING NO.	MERITOR WHEEL CYLINDER NO.	PAGE NO.	WHEEL CYLINDER CASTING NO.	MERITOR WHEEL CYLINDER NO.	PAGE NO.	WHEEL CYLINDER CASTING NO.	MERITOR WHEEL CYLINDER NO.	PAGE NO.
FE3067	**R4133718**	6-121	FE3070	**R4133719**	6-121	FE73536	**R4133316**	6-126	K2	**R4133336**	6-128
FE3068	**R4133316**	6-126	FE32350	**R4133380**	6-126	FE73536	**R4133582**	6-126	K-2	**R4133336**	6-128
FE3068	**R4133321**	6-122	FE32351	**R4133376**	6-124	FE73536	**R4133721**	6-126	K22	**R4133930**	6-113
FE3068	**R4133715**	6-121	FE32351	**R4133379**	6-126	FE73536	**R4133723**	6-126	K-64	**R4133540**	6-118
FE3068	**R4133717**	6-121	FE32352	**R4133377**	6-124	FE78976	**R4133004**	6-117	K8	**R4133719**	6-121
FE3068	**R4133719**	6-121	FE32352	**R4133380**	6-126	FE78976	**R4133005**	6-117	P2	**R4133792**	6-119
FE3069	**R4133315**	6-126	FE32359	**R4133379**	6-126	FE83666	**R4133637**	6-116	P3	**R4133792**	6-119
FE3069	**R4133581**	6-126	FE34074	**R4133366**	6-115	FE83666	**R4133638**	6-116	P7	**R4133791**	6-119
FE3069	**R4133714**	6-121	FE34075	**R4133367**	6-115	FE83712	**R4133606**	6-130			
FE3069	**R4133716**	6-121	FE54398	**R4133597**	6-116	FE83712	**R4133607**	6-127			
FE3069	**R4133718**	6-121	FE54697	**R4133469**	6-116	FE83713	**R4133606**	6-130			
FE3070	**R4133316**	6-126	FE73535	**R4133315**	6-126	FE86450	**R4133905**	6-129			
FE3070	**R4133582**	6-126	FE73535	**R4133581**	6-126	FE86451	**R4133906**	6-129			
FE3070	**R4133715**	6-121	FE73535	**R4133720**	6-126	K17	**R4133541**	6-118			
FE3070	**R4133717**	6-121	FE73535	**R4133722**	6-126	K19	**R4133400**	6-131			

CATALOG ILLUSTRATION DISCLAIMER

The Meritor Product Photo and Illustration Sections are to be used as a supplemental aid in identifying the configurations and specifications of many of the hydraulic brake parts found in this Catalog.

CAUTION

IN NO CASE SHOULD THESE PICTURES & ILLUSTRATIONS BE USED TO MAKE PRODUCT SUBSTITUTIONS. USE THE APPROPRIATE CATALOG APPLICATION DATA TO DETERMINE THE CORRECT PART.

These illustrations are intended to show the configurations of **Meritor parts only**. The outward appearance of these parts may or may not match OEM or competitive parts.

The Photographs and Illustrations shown in this catalog are typical and may vary slightly in detail from actual parts due to manufacturing tolerances, and/or OEM design differences. The general configuration of the part will be the same, i.e. port positions, mounting holes, etc.

Many parts may have the same external dimensions, but have different internal dimensions and/or materials. These differences make it imperative that only the application guide be used to determine the suitability of a particular part.

The Casting Number Indexes and related information shown is to identify general product configurations. Casting numbers will change with different manufacturers. Casting numbers and much of the associated information is shown when available. Although Meritor believes the information contained in the Index to be correct, errors may be present and further investigation may be needed. Meritor cannot and does not assume any responsibility or liability for such errors or harm resulting therefrom.

WARNING
MANY PARTS THAT SEEM SIMILAR ARE DIFFERENT AND SHOULD NOT BE INTERCHANGED.
AGAIN, NOTE THAT THE PHOTO AND ILLUSTRATION SECTION IN THIS CATALOG IS NOT TO BE USED TO MAKE PRODUCT SUBSTITUTIONS, BUT TO IDENTIFY CONFIGURATIONS AND APPLICATIONS.

USE ONLY THE BRAKE FLUID SPECIFIED BY THE VEHICLE MANUFACTURER. DO NOT USE PETROLEUM BASED SOLVENTS OR CLEANERS.

WHEEL CYLINDERS

Listed by Bore Size

3/4" Bore — SINGLE CYLINDER — LEFT AND RIGHT

7/16"-24 Port with tube seat

For Rebuild, Use Repair Kit R4166599

MERITOR NO.	CASTING NO.	REPLACES	APPLICATION
R4133851	2231032 637 FD101605 FD49333 FE101605	Bendix 33851 EIS EW98278 Ford E3TZ-2261B Wagner F106492	Ford

3/4" Bore — SINGLE CYLINDER — LEFT AND RIGHT

3/8"-24 Port with tube seat

For Rebuild, Use Repair Kit R4166599

MERITOR NO.	CASTING NO.	REPLACES	APPLICATION
R4133858	776 FD119588	Bendix 33858 Chrysler 4313056 EIS EW104396 Wagner F109532	Chrysler Dodge Jeep Plymouth

3/4" Bore — SINGLE CYLINDER — LEFT AND RIGHT

3/8"-24 Port with tube seat

For Rebuild, Use Repair Kit R4166684

MERITOR NO.	CASTING NO.	REPLACES	APPLICATION
R4133891	085.W 18002371 18002625 30564-S 30565-S 779	Bendix 33891 EIS EW104434 GM 18012303 18003743 18007980 Wagner F110260	Chevrolet GMC

3/4" Bore — SINGLE CYLINDER — LEFT AND RIGHT

M10 x 1 Port

For Rebuild, Use Repair Kit R4166307

MERITOR NO.	CASTING NO.	REPLACES	APPLICATION
R4133958	FD120503 W	Bendix 33985 EIS EW155121 GM 18014499 Wagner F116367	Chevrolet Pontiac

13/16" Bore — SINGLE CYLINDER — LEFT AND RIGHT

3/8"-24 Port with tube seat

For Rebuild, Use Repair Kit R4166510

MERITOR NO.	CASTING NO.	REPLACES	APPLICATION
R4133893	30575	GM 18012273 Wagner F110263	Chevrolet GMC

13/16" Bore — SINGLE CYLINDER — LEFT AND RIGHT

3/8"-24 Port with tube seat

For Rebuild, Use Repair Kit R4166811

MERITOR NO.	CASTING NO.	REPLACES	APPLICATION
R4133278	1430 306246 565 9023 FD40201	Am. Mtr. 3229079 Bendix 33278 Chrysler J8126718 EIS EW39958 Ford E4TZ-2262C ITE 419093C91 Wagner F37782	Ford Jeep

WHEEL CYLINDERS
Listed by Bore Size

13/16" Bore — **SINGLE CYLINDER — LEFT AND RIGHT**

3/8"-24 Port with tube seat

For Rebuild, Use Repair Kit R4166811

MERITOR NO.	CASTING NO.	REPLACES	APPLICATION
R4133279	306246 565 8A2192 9023 FD40201 FD40202	Am. Mtr. 3229078 Bendix 33279 Chrysler J8126717 EIS EW39959 Ford E4TZ-2261C ITE 419094C91 Wagner F37783	Ford Jeep

13/16" Bore — **SINGLE CYLINDER — LEFT AND RIGHT**

7/16"-24 Port with tube seat

For Rebuild, Use Repair Kit R4166766

MERITOR NO.	CASTING NO.	REPLACES	APPLICATION
R4133904	637 FD101605 FD49333	Bendix 33904 EIS EW104397 Ford E4TZ-2261A Wagner F110873	Ford

13/16" Bore — **SINGLE CYLINDER — LEFT AND RIGHT**

7/16"-24 Port with tube seat

For Rebuild, Use Repair Kit R4166811

MERITOR NO.	CASTING NO.	REPLACES	APPLICATION
R4133930	784 FD122380 K22	Bendix 33930 EIS EW155041 Ford E69Z-2261A Wagner F112409	Ford Mazda

13/16" Bore — **SINGLE CYLINDER — LEFT AND RIGHT**

3/8"-24 Port with tube seat

For Rebuild, Use Repair Kit E-8089

MERITOR NO.	CASTING NO.	REPLACES	APPLICATION
R4134064	29477-C 30615-C 3461777	Chrysler 4313493 EIS EW155077 Wagner F113704	Dodge

7/8" Bore — **SINGLE CYLINDER — LEFT**

7/16"-20 Port

For Rebuild, Use Repair Kit R4166820

MERITOR NO.	CASTING NO.	REPLACES	APPLICATION
R4133406	29340C 5459230 5459232 618826 639 CW908J FD35436	Bendix 33406 Chev/GM 18004991 5457147 Gunite(K-H) 7049 Wagner F34401	Chev/GM with GM 14" x 2 1/2" Front Brakes

7/8" Bore — **SINGLE CYLINDER — RIGHT**

7/16"-20 Port

For Rebuild, Use Repair Kit R4166820

MERITOR NO.	CASTING NO.	REPLACES	APPLICATION
R4133407	29339C 5459231 5459229 618827 638 CW909G FD35437	Bendix 33407 Chev/GM 18004990 5457146 Gunite(K-H) 7048 Wagner F34402	Chev/GM with GM 14" x 2 1/2" Front Brakes

WHEEL CYLINDERS
Listed by Bore Size

7/8" Bore — **SINGLE CYLINDER — LEFT**

3/8"-24 Port with tube seat

For Rebuild, Use Repair Kit R4166820

MERITOR NO.	CASTING NO.	REPLACES	APPLICATION
R4133627	306246 49024, 49194 5461572 565 9023, 9027 FD59238 FD9023 FD9059	Bendix 33627 Chrysler J8126715 EIS EW9021 Ford D3ZZ-2262A ITE 352786C91 Wagner F17507	Dodge Ford Jeep Plymouth

7/8" Bore — **SINGLE CYLINDER — RIGHT**

3/8"-24 Port with tube seat

For Rebuild, Use Repair Kit R4166820

MERITOR NO.	CASTING NO.	REPLACES	APPLICATION
R4133628	306246 49024, 49194 5461572 565 9023, 9027 FD38767 FD9023, FD9059	Am. Mtr. 3225196 Bendix 33628 Chrysler J8126714 EIS EW9022 Ford D3TZ-2261A D3ZZ-2261A ITE 352787C91 Wagner F17508	Dodge Ford Jeep Plymouth

7/8" Bore — **SINGLE CYLINDER — LEFT AND RIGHT**

3/8"-24 Port with tube seat

For Rebuild, Use Repair Kit R4166880

MERITOR NO.	CASTING NO.	REPLACES	APPLICATION
R4133447	29452C 5464077 5464079 618878 700 FD49391	Bendix 33447 EIS EW45873 GM 18004888 Wagner F45873	Chevrolet GMC

7/8" Bore — **SINGLE CYLINDER — LEFT AND RIGHT**

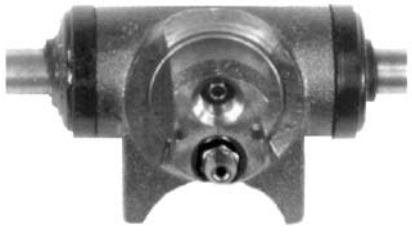

3/8"-24 Port with tube seat

For Rebuild, Use Repair Kit R4166550

MERITOR NO.	CASTING NO.	REPLACES	APPLICATION
R4133892	085.W 18002371 18002625 30564-S 30565-S 779	Bendix 33892 EIS EW104432 GM 18009377 18012305 Wagner F110261	Chevrolet GMC

7/8" Bore — **SINGLE CYLINDER — LEFT AND RIGHT**

3/8"-24 Port with tube seat

For Rebuild, Use Repair Kit R4166820

MERITOR NO.	CASTING NO.	REPLACES	APPLICATION
R4134028	FE122380	EIS EW155194 Wagner F122406	Ford

7/8" Bore — **SINGLE CYLINDER — LEFT AND RIGHT**

3/8"-24 Port

For Rebuild, Use Repair Kit R4166550

MERITOR NO.	CASTING NO.	REPLACES	APPLICATION
R4134075	—	Bendix 34075 EIS WC14075 GM 18015812 Wagner F123199	Chevrolet GMC

WHEEL CYLINDERS
Listed by Bore Size

15/16" Bore — **SINGLE CYLINDER — LEFT**

7/16"-20 Port

For Rebuild, Use Repair Kit R4166852

MERITOR NO.	CASTING NO.	REPLACES	APPLICATION
R4133366	29390 5463082 5463083 618896L 618897R 656 FE34074	Bendix 33366 Ford C1TT-2061C Wagner F34072	Ford with Bendix 13" x 2 1/4" Front Brakes

15/16" Bore — **SINGLE CYLINDER — RIGHT**

7/16"-20 Port

For Rebuild, Use Repair Kit R4166852

MERITOR NO.	CASTING NO.	REPLACES	APPLICATION
R4133367	29391 5463082 5463083 618897R 657 FE34075	Bendix 33367 Ford C1TT-2062C Wagner F34073	Ford with Bendix 13" x 2 1/4" Front Brakes

15/16" Bore — **SINGLE CYLINDER — LEFT**

3/8"-24 Port

For Rebuild, Use Repair Kit R4166852

MERITOR NO.	CASTING NO.	REPLACES	APPLICATION
R4133230	29663614 38767 49024 5461444 565 9023 FD59238 FD59256	Bendix 33230/33600 Ford C2SZ-2261A/C7AZ-2262A D1AZ-2262A/D20Z-2262A D3TZ-2262B/D5DZ-2262A Wagner F59240	Ford with Bendix 12" x 2 1/2" Rear Brakes

15/16" Bore — **SINGLE CYLINDER — RIGHT**

3/8"-24 Port

For Rebuild, Use Repair Kit R4166852

MERITOR NO.	CASTING NO.	REPLACES	APPLICATION
R4133231	306246 38767 49024 5461444 565 9023 FD59238	Bendix 33231/33601 Ford C7AZ-2261A D30Z-2261C D5DZ-2261A Wagner F59241	Ford with Bendix 12" x 2 1/2" Rear Brakes

WHEEL CYLINDERS
Listed by Bore Size

15/16" Bore — **SINGLE CYLINDER — LEFT AND RIGHT**

3/8"-24 Port with tube seat — For Rebuild, Use Repair Kit R4166852

MERITOR NO.	CASTING NO.	REPLACES	APPLICATION
R4133469	29471C 5459465 5465656 710 FD54381 FD54390 FE54697	Am. Mtr. 8126742 Bendix 33469 Chrysler J8129723 EIS EW51081 GM 18004890 Wagner F51081	Chevrolet GMC Jeep

15/16" Bore — **SINGLE CYLINDER — LEFT AND RIGHT**

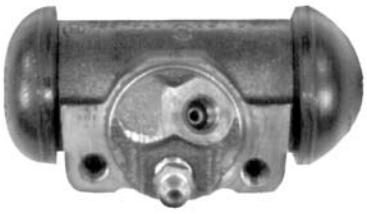

3/8"-24 Port with tube seat — For Rebuild, Use Repair Kit R4166852

MERITOR NO.	CASTING NO.	REPLACES	APPLICATION
R4133637	743 FE83666	Bendix 33637 EIS EW74998 Ford D30Z-2262A E2TZ-2262D Wagner F73620	Ford

15/16" Bore — **SINGLE CYLINDER — LEFT AND RIGHT**

3/8"-24 Port with tube seat — For Rebuild, Use Repair Kit R4166852

MERITOR NO.	CASTING NO.	REPLACES	APPLICATION
R4133638	743 FE83666	Bendix 33638 EIS EW74997 Ford D30Z-2261A E2TZ-2261D Wagner F73621	Ford

15/16" Bore — **SINGLE CYLINDER — LEFT AND RIGHT**

3/8"-24 Port — For Rebuild, Use Repair Kit R4166852

MERITOR NO.	CASTING NO.	REPLACES	APPLICATION
R4133597	705 FE54398	Bendix 33597 EIS EW75880 Wagner F106315	Dodge

15/16" Bore — **SINGLE CYLINDER — LEFT AND RIGHT**

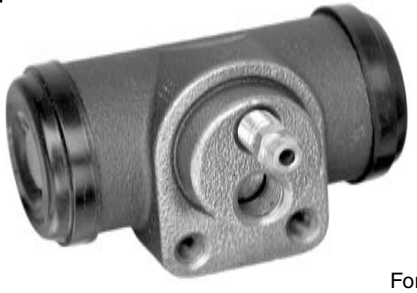

10x1.0mm — For Rebuild, Use Repair Kit E-9246

MERITOR NO.	CASTING NO.	REPLACES	APPLICATION
R4134054	—	Bendix 34054 EIS EW155206 Wagner F129443	Chevrolet

The Meritor Product Photo and Illustration Sections are to be used as a supplemental aid in identifying the configurations and specifications of many of the hydraulic brake parts found in this Catalog.

CAUTION

IN NO CASE SHOULD THESE PICTURES & ILLUSTRATIONS BE USED TO MAKE PRODUCT SUBSTITUTIONS. USE THE APPROPRIATE CATALOG APPLICATION DATA TO DETERMINE THE CORRECT PART.

WHEEL CYLINDERS

Listed by Bore Size

1" Bore — **SINGLE CYLINDER — LEFT**

7/16"-24 Port with tube seat

For Rebuild, Use Repair Kit R4166822

MERITOR NO.	CASTING NO.	REPLACES	APPLICATION
R4133002	519 5450649 5450650 616401 618424 7565 FD2749 FD9336	Bendix 33002 Chev/GM 18008403 5450644 5456587 5465753 Wagner F9336	Chev/GM, Dodge with Bendix 14 x 2 1/4" Front Brakes

1" Bore — **SINGLE CYLINDER — RIGHT**

7/16"-24 Port with tube seat

For Rebuild, Use Repair Kit R4166822

MERITOR NO.	CASTING NO.	REPLACES	APPLICATION
R4133003	519 5450649 616401 618424 7565 FD2749 FD9337	Bendix 33003 Chev/GM 18008404 5450643 5456586 5465752 5473043 Wagner F9337	Chev/GM, Dodge with Bendix 14 x 2 1/2" Front Brakes

The Meritor Product Photo and Illustration Sections are to be used as a supplemental aid in identifying the configurations and specifications of many of the hydraulic brake parts found in this Catalog.

CAUTION

IN NO CASE SHOULD THESE PICTURES & ILLUSTRATIONS BE USED TO MAKE PRODUCT SUBSTITUTIONS. USE THE APPROPRIATE CATALOG APPLICATION DATA TO DETERMINE THE CORRECT PART.

1" Bore — **SINGLE CYLINDER — LEFT AND RIGHT**

3/8"-24 Port with tube seat

For Rebuild, Use Repair Kit R4166620

MERITOR NO.	CASTING NO.	REPLACES	APPLICATION
R4133608	520 5450470 6122 FD6122	Bendix 33608 Eagle/Jeep J8129724 EIS EW71119 GM 18004793 Wagner F51088	Chevrolet GMC Jeep

1" Bore — **SINGLE CYLINDER — LEFT AND RIGHT**

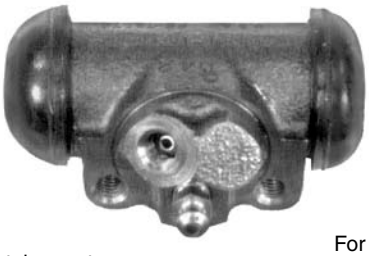

3/8"-24 Port with tube seat

For Rebuild, Use Repair Kit R4166822

MERITOR NO.	CASTING NO.	REPLACES	APPLICATION
R4133005	306246 38767 5461454 565 8M2192A2 FD57584, FD9028 FD9060 FE78976	Bendix 33005 Chrysler 4088899 4088898 3633517 EIS EW74996 Ford D3SZ-2261A D30Z-2261D Wagner F78975	Dodge Ford GMC Jeep Plymouth

1" Bore — **SINGLE CYLINDER — LEFT AND RIGHT**

3/8"-24 Port with tube seat

For Rebuild, Use Repair Kit R4166822

MERITOR NO.	CASTING NO.	REPLACES	APPLICATION
R4133004	29663615 306246 38767 5461454 565 8M2192A2 FD57583,FD9027 FD9060 FE78976	Bendix 33004 Chrysler 4088898 4088899 EIS EW74995 Ford D30Z-2262D ITE 127781R91 455652C91 Wagner F78974	Dodge Ford GMC Jeep Plymouth

WHEEL CYLINDERS
Listed by Bore Size

1" Bore — SINGLE CYLINDER — LEFT

3/8"-24 Port with tube seat

For Rebuild, Use Repair Kit R4166822

MERITOR NO.	CASTING NO.	REPLACES	APPLICATION
R4133725	519 5450649 5450650 5453785 616173, 618424 7565 FD2749 FD4805	Bendix 33725 Chrysler J937959 EIS EW13387 Ford E2TZ-2262B D6TZ-2262A D6TZ-2262B GM 18005633 Wagner F57146	Ford Jeep

1" Bore — SINGLE CYLINDER — RIGHT

3/8"-24 Port with tube seat

For Rebuild, Use Repair Kit R4166822

MERITOR NO.	CASTING NO.	REPLACES	APPLICATION
R4133726	519 5450649 5450650 5453785 616173, 618424 7565 FD2749, FD4805	Bendix 33726 Chrysler J937960 EIS EW13388 Ford D6TZ-2261A D6TZ-2261B E2TZ-2261B Wagner F57147	Ford Jeep

1" Bore — SINGLE CYLINDER — LEFT AND RIGHT

3/8"-24 Port with tube seat

For Rebuild, Use Repair Kit R4166620

MERITOR NO.	CASTING NO.	REPLACES	APPLICATION
R4134047	FD120768	Bendix 34047 EIS EW155151 GM 18014081 Wagner F116359	Chevrolet GMC

These illustrations are intended to show the configurations of **Meritor parts only**. The outward appearance of these parts may or may not match OEM or competitive parts.

1 1/16" Bore — SINGLE CYLINDER — LEFT

7/16"-20 Port

For Rebuild, Use Repair Kit R4166821

MERITOR NO.	CASTING NO.	REPLACES	APPLICATION
R4133540	302862 383 566 FD13368 FD13370 K-64	Bendix 33540 Wagner F13368	Dodge with Bendix 14 x 2 1/2" Front Brakes

1 1/16" Bore — SINGLE CYLINDER — RIGHT

7/16"-20 Port

For Rebuild, Use Repair Kit R4166821

MERITOR NO.	CASTING NO.	REPLACES	APPLICATION
R4133541	566 FD13369 FD13370 K17	Bendix 33541 Wagner F13369	Dodge with Bendix 14" x 2 1/2" Front Brakes

WHEEL CYLINDERS
Listed by Bore Size

1 1/16" Bore

SINGLE CYLINDER — LEFT

3/8"-24 Port with tube seat

For Rebuild, Use Repair Kit R4166821

MERITOR NO.	CASTING NO.	REPLACES	APPLICATION
R4133791	566 616173 618424 FD13370 FD2751	Bendix 33791 Chrysler 3633321 4088911 EIS EW18984 Ford D3TZ-2262D E2TZ-2262A Wagner F18984	Dodge Ford Plymouth

1 1/16" Bore

SINGLE CYLINDER — LEFT AND RIGHT

3/8"-24 Port with tube seat

For Rebuild, Use Repair Kit R4166872

MERITOR NO.	CASTING NO.	REPLACES	APPLICATION
R4133709	2621301 2621302 29634C 747 FD107134	Bendix 33709 EIS EW79767 GM 18004794 2621260 Wagner F79767	Chevrolet GMC

1 1/16" Bore

SINGLE CYLINDER — RIGHT

3/8"-24 Port with tube seat

For Rebuild, Use Repair Kit R4166821

MERITOR NO.	CASTING NO.	REPLACES	APPLICATION
R4133792	566 616173 618424 FD13370 FD2751	Bendix 33792 Chrysler 3633322 4088910 EIS EW18985 Ford D3TZ-2261D D6TZ-2061A Wagner F18985	Dodge Ford Plymouth

The Casting Number Indexes and related information shown is to identify general product configurations. Casting numbers will change with different manufacturers. Casting numbers and much of the associated information is shown when available. Although Meritor believes the information contained in the Index to be correct, errors may be present and further investigation may be needed. Meritor cannot and does not assume any responsibility or liability for such errors or harm resulting therefrom.

WHEEL CYLINDERS

Listed by Bore Size

1 1/16" Bore — SINGLE CYLINDER — LEFT

3/8"-24 Port with tube seat

For Rebuild, Use Repair Kit R4166821

MERITOR NO.	CASTING NO.	REPLACES	APPLICATION
R4133791	2231365 30525 521 P7	Chrysler 4219049 EIS EW98218 Wagner F106922	Dodge

1 1/16" Bore — SINGLE CYLINDER — RIGHT

3/8"-24 Port with tube seat

For Rebuild, Use Repair Kit R4166821

MERITOR NO.	CASTING NO.	REPLACES	APPLICATION
R4133792	2231365 30525 521 P2	Chrysler 4219048 EIS EW98219 Wagner F106923	Dodge

1 3/32" Bore — SINGLE CYLINDER — LEFT

3/8"-24 Port

For Rebuild, Use Repair Kit R4166819

MERITOR NO.	CASTING NO.	REPLACES	APPLICATION
R4133484	616189 651 C30A2191C FD41766	Bendix 33484 Ford C1SS-2062A C1VV-2062A C2BY-2062A C2VY-2062A C9TZ-2062B Gunite(K-H) 7040 Wagner F55890	Dodge, Ford with Gunite (K-H) 14" x 2 1/2" Front Brakes

1 3/32" Bore — SINGLE CYLINDER — RIGHT

3/8"-24 Port

For Rebuild, Use Repair Kit R4166819

MERITOR NO.	CASTING NO.	REPLACES	APPLICATION
R4133485	616190 616190R 617629 650 FD41767	Bendix 33485 Ford C1VV-2061A C2VY-2061A C9TZ-2061B Gunite (K-H) 7039 Wagner F55891	Dodge, Ford with Gunite(K-H) 14" x 2 1/2" Front Brakes

1 3/32" Bore — SINGLE CYLINDER — LEFT

3/8"-24 Port with tube seat

For Rebuild, Use Repair Kit R4166819

MERITOR NO.	CASTING NO.	REPLACES	APPLICATION
R4133915	18292 65 651 C30A2191C	EIS EW103223 Ford E0HZ-2062A Wagner F103223	Ford

1 3/32" Bore — SINGLE CYLINDER — RIGHT

3/8"-24 Port with Tube Seat

For Rebuild, Use Repair Kit R4166819

MERITOR NO.	CASTING NO.	REPLACES	APPLICATION
R4133916	0 18293 650 C30A2190C	EIS EW103224 Ford E0HZ-2061A Wagner F103224	Ford

WHEEL CYLINDERS
Listed by Bore Size

1 1/8" Bore

SINGLE CYLINDER
UPPER AND LOWER LEFT — DODGE, ITE
LOWER LEFT — FORD

7/16"-24 Port with tube seat - top hole
7/16"-20 Bleeder Screw - bottom hole

For Rebuild, Use Repair Kit R4166926

MERITOR NO.	CASTING NO.	REPLACES	APPLICATION
R4133714	572 3067 3069 29268 618306 618331 FE3067 FE3069	Bendix 33714 Ford C9TZ-2062A Gunite 7062 (K-H) ITE 341037C91 Wagner F43375	Dodge, Ford, ITE with Wagner 15" x 3" Front Brakes

1 1/8" Bore

SINGLE CYLINDER
UPPER AND LOWER LEFT — DODGE, ITE
LOWER RIGHT — FORD

7/16"-24 Port with tube seat - top hole
7/16"-20 Bleeder Screw - bottom hole

For Rebuild, Use Repair Kit R4166926

MERITOR NO.	CASTING NO.	REPLACES	APPLICATION
R4133715	573 3068 3070 29266 618307 C5 FE3068 FE3070	Bendix 33715 Ford C4TZ-2061D C9TZ-2061A Gunite(K-H) 7061 ITE 341038C91 Wagner F43376	Dodge, Ford, ITE with Wagner 15" x 3" Front Brakes

1 1/8" Bore

SINGLE CYLINDER UPPER — LEFT

7/16"-24 Port with tube seat

For Rebuild, Use Repair Kit R4166926

MERITOR NO.	CASTING NO.	REPLACES	APPLICATION
R4133716	572 3067 3069 29268 618306 618331 FE3067 FE3069	Bendix 33716 Ford D0TZ-2061A Gunite (K-H) 7073 Wagner F73500	Ford with Wagner 15" x 3" Front Brakes

1 1/8" Bore

SINGLE CYLINDER UPPER — RIGHT

7/16"-24 Port with tube seat

For Rebuild, Use Repair Kit R4166926

MERITOR NO.	CASTING NO.	REPLACES	APPLICATION
R4133717	573 3068 3070 29266 618307 C5 FE3068 FE3070	Bendix 33717 Ford D0TZ-2062A Gunite (K-H) 7072 Wagner F73501	Ford with Wagner 15" x 3" Front Brakes

1 1/8" Bore

SINGLE CYLINDER UPPER — LEFT

7/16"-20 Bleeder Port
7/16"-24 Port with tube seat

For Rebuild, Use Repair Kit R4166926

MERITOR NO.	CASTING NO.	REPLACES	APPLICATION
R4133718	572 3067 3069 29268 618306 618331 FE3067 FE3069	Bendix 33718 Ford D0TZ-2062B Wagner F71940	Ford with Wagner 15" x 3" Front Brakes

1 1/8" Bore

SINGLE CYLINDER UPPER — RIGHT

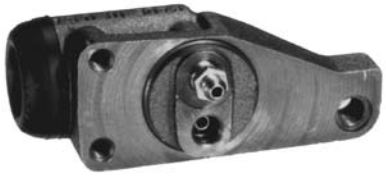

7/16"-20 Bleeder Port
7/16"-24 Port with tube seat

For Rebuild, Use Repair Kit R4166926

MERITOR NO.	CASTING NO.	REPLACES	APPLICATION
R4133719	573 3068 3070 29266 618307 C5 FE3068 FE3070	Bendix 33719 Ford D0TZ-2061B Wagner F71941	Ford with Wagner 15" x 3" Front Brakes

WHEEL CYLINDERS
Listed by Bore Size

1 1/8" Bore — SINGLE CYLINDER UPPER AND LOWER — LEFT

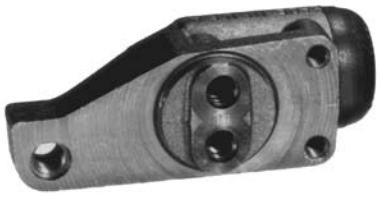

7/16"-20 Port

For Rebuild, Use Repair Kit R4166926

MERITOR NO.	CASTING NO.	REPLACES	APPLICATION
R4133320	3067 3069 572 618306 C10 FD8852 FE3067	Bendix 33320 Chev/GM 2254355 5473062 Gunite(K-H) 7052 ITE 73120R91 Wagner F8852	Chev/GM, ITE with Wagner 15" x 3" Front Brakes

1 1/8" Bore — SINGLE CYLINDER UPPER AND LOWER — RIGHT

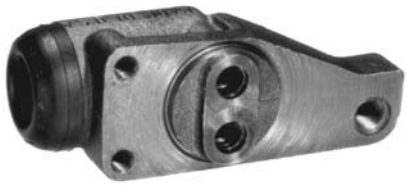

7/16"-20 Port

For Rebuild, Use Repair Kit R4166926

MERITOR NO.	CASTING NO.	REPLACES	APPLICATION
R4133321	3068 3070 573 618307 FD8853 FE3068	Bendix 33321 Chev/GM 2254354 5473063 Gunite(K-H) 7051 ITE 73121R91 Wagner F8853	Chev/GM, ITE with Wagner 15" x 3" Front Brakes

1 1/8" Bore — SINGLE CYLINDER — LEFT

3/8"-24 Port (For Banjo Fitting)

For Rebuild, Use Repair Kit R4166935

MERITOR NO.	CASTING NO.	REPLACES	APPLICATION
R4133614	5463023 651 FD41766	Bendix 33614 Ford C20Z-2062A C20Z-2062C Wagner F40951	Ford with Bendix 12" x 3" Rear Brakes

1 1/8" Bore — SINGLE CYLINDER — RIGHT

3/8"-24 Port (For Banjo Fitting)

For Rebuild, Use Repair Kit R4166935

MERITOR NO.	CASTING NO.	REPLACES	APPLICATION
R4133615	29367C 5463024 650 FD40951 FD40952 FD41767	Bendix 33615 Ford C20Z-2061C C30Z-2061B C8TZ-2061A Wagner F40952	Ford with Bendix 12" x 3" Front or Rear Brakes

WHEEL CYLINDERS
Listed by Bore Size

1 1/8" Bore — SINGLE CYLINDER — LEFT AND RIGHT

3/8"-24 Port (with Tube Seat)

For Rebuild, Use Repair Kit R4166818

MERITOR NO.	CASTING NO.	REPLACES	APPLICATION
R4133206	29337C 29663657 303889L 5450646 5450822 5453821 5453822 5455479 5456994 5461581 5461582 616931L 617451 650 651 8300 8301 AD2181A AD2191A FD14495 FD27340 FD35438	Bendix 33206 Chrysler 4086503 4313333 4313657 EIS EW35326 Ford D1TZ-2062A D3UZ-2062A D3UZ-2061B D3TZ-2062A E4TZ-2262B GM 18008599 5457162 ITE 391314C91 419084C91 592250C91 Wagner F35325	Chevrolet Dodge Ford GMC

1 1/8" Bore — SINGLE CYLINDER — LEFT AND RIGHT

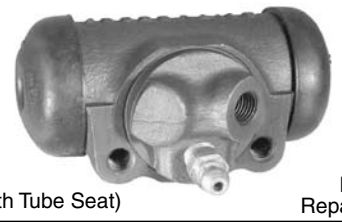

3/8"-24 Port (with Tube Seat)

For Rebuild, Use Repair Kit R4166818

MERITOR NO.	CASTING NO.	REPLACES	APPLICATION
R4133207	29663657 29663673 303890R 5450646 5450822 5453822 5455478 5456995 5461581&2 616932R 617452 651 8300 8301 AD2180A AD2181A AD2190A FD14495 FD27341 FD35349	Bendix 33207 Chrysler 4313332 4313656 EIS EW35325 Ford D1TZ-2061A D3TZ-2061A D3UZ-2061A D3UZ-2062B E4TZ-2261B GM 5457163 5463031 ITE 419085C91 592251C91 Wagner F35326	Chevrolet Dodge Ford GMC

1 1/8" Bore — SINGLE CYLINDER — LEFT AND RIGHT

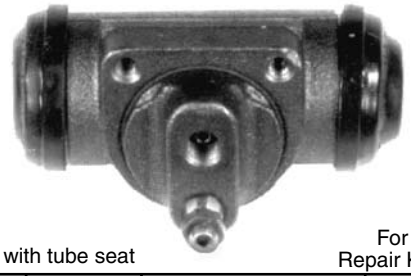

3/8"-24 Port with tube seat

For Rebuild, Use Repair Kit R4166298

MERITOR NO.	CASTING NO.	REPLACES	APPLICATION
R4133962	FD120808	Bendix 33962 EIS EW155119 GM 18013954 Wagner F116263	Chevrolet GMC

1 1/8" Bore — SINGLE CYLINDER — LEFT

7/16"-24 Port tube seat
Bleeder Screw E-4092

For Rebuild, Use Repair Kit R4166935

MERITOR NO.	CASTING NO.	REPLACES	APPLICATION
R4134139	—	Bendix 34139 Raybestos WC370042	—

1 1/8" Bore — SINGLE CYLINDER — RIGHT

7/16"-24 Port tube seat
Bleeder Screw E-4092

For Rebuild, Use Repair Kit R4166935

MERITOR NO.	CASTING NO.	REPLACES	APPLICATION
R4134140	—	Bendix 34140 Raybestos WC370043	—

WHEEL CYLINDERS
Listed by Bore Size

1 3/16" Bore — **SINGLE CYLINDER — LEFT AND RIGHT**

3/8"-24 Port — For Rebuild, Use Repair Kit R4166872

MERITOR NO.	CASTING NO.	REPLACES	APPLICATION
R4133708	2621301 29663644 748 FD108361 FD108937	Chev/GM 18004609 Wagner F79768	Chev/GM, with GM 13" x 3 1/2" Rear Brakes

1 3/16" Bore — **SINGLE CYLINDER — LEFT**

3/8"-24 Port with tube seat — For Rebuild, Use Repair Kit R4166764

MERITOR NO.	CASTING NO.	REPLACES	APPLICATION
R4133945	18292 651 C30A2191C FD45932 FD45968	Bendix 33945 EIS EW155069 Ford E7TZ-2262A Wagner F113757	Ford with Bendix 12" x 3" Rear Brakes

1 3/16" Bore — **SINGLE CYLINDER — RIGHT**

3/8"-24 Port with tube seat — For Rebuild, Use Repair Kit R4166764

MERITOR NO.	CASTING NO.	REPLACES	APPLICATION
R4133946	18293 650 C30A2190C	Bendix 33946 EIS EW155068 Ford E7TZ-2261A Wagner F113758	Ford

1 3/16" Bore — **SINGLE CYLINDER — LEFT AND RIGHT**

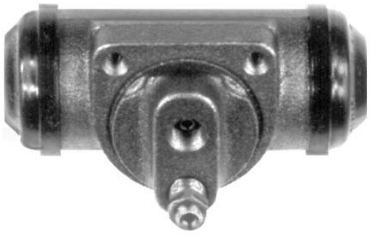

3/8"-24 Port with tube seat — For Rebuild, Use Repair Kit R4166297

MERITOR NO.	CASTING NO.	REPLACES	APPLICATION
R4133961	FD120808	Bendix 33961 EIS EW155120 GM 18013956 Wagner F116224	Chevrolet GMC

1 1/4" Bore — **SINGLE CYLINDER UPPER AND LOWER — LEFT**

7/16"-20 Port — For Rebuild, Use Repair Kit R4166923

MERITOR NO.	CASTING NO.	REPLACES	APPLICATION
R4133376	618851 670 FE32351	Bendix 33376 Chev/GM 2404322 5473113 Wagner F32349	Chev/GM with Wagner 15" x 3 1/2" Front Brakes

1 1/4" Bore — **SINGLE CYLINDER UPPER AND LOWER — RIGHT**

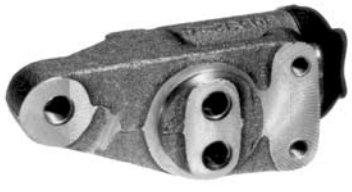

7/16"-20 Port — For Rebuild, Use Repair Kit R4166923

MERITOR NO.	CASTING NO.	REPLACES	APPLICATION
R4133377	618852 671 FE32352	Bendix 33377 Chev/GM 2404321 5473114 Raybestos WC37092 Wagner F32350	Bendix Chev/GM with Wagner 15" x 3 1/2" Front Brakes EIS Raybestos

WHEEL CYLINDERS

Listed by Bore Size

1 1/4" Bore

SINGLE CYLINDER
UPPER AND LOWER LEFT — ITE
LOWER LEFT — FORD
UPPER AND LOWER RIGHT — DODGE

7/16"-24 Port with tube seat

For Rebuild, Use Repair Kit R4166923

MERITOR NO.	CASTING NO.	REPLACES	APPLICATION
R4133581	3069 572 FD73535 FE3069 FE73535	Bendix 33581 EIS EW43383 Ford D0TZ-2062C Gunite 7069 (K-H) ITE 341035C91 Wagner F43383 F73531	Dodge, Ford, ITE with Wagner 14" x 2 1/2", 15" x 3", 15" x 3 1/2" Front Brakes

1 1/4" Bore

SINGLE CYLINDER
UPPER AND LOWER RIGHT — ITE
LOWER RIGHT — FORD
UPPER AND LOWER LEFT — DODGE

7/16"-24 Port with tube seat

For Rebuild, Use Repair Kit R4166923

MERITOR NO.	CASTING NO.	REPLACES	APPLICATION
R4133582	3070 3070C7 573 FD73536 FE3070 FE73536	Bendix 33582 EIS EW43384 ITE 341036C91 Ford D0TZ-2061C Gunite (K-H) 7070 Wagner F43384 F73532	Dodge, Ford, ITE with Wagner 14" x 2 1/2", 15" x 3", 15" x 3 1/2" Front Brakes

1 1/4" Bore

SINGLE CYLINDER UPPER — LEFT

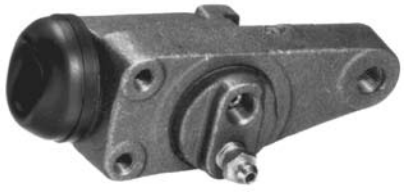

7/16"-24 Port with tube seat

For Rebuild, Use Repair Kit R4166923

MERITOR NO.	CASTING NO.	REPLACES	APPLICATION
R4133720	3069 572 C5 FE73535	Bendix 33720 Ford D0TZ-2062D Wagner F73543	Ford with Wagner 15" x 3" Front Brakes

1 1/4" Bore

SINGLE CYLINDER UPPER — RIGHT

7/16"-24 Port with tube seat

For Rebuild, Use Repair Kit R4166923

MERITOR NO.	CASTING NO.	REPLACES	APPLICATION
R4133721	3070 573 C3 FE73536	Bendix 33721 Ford D0TZ-2061D Wagner F73544	Ford with Wagner 15" x 3" Front Brakes

1 1/4" Bore

SINGLE CYLINDER UPPER — LEFT

7/16"-24 Port with tube seat
Tube seats in both ports

For Rebuild, Use Repair Kit R4166923

MERITOR NO.	CASTING NO.	REPLACES	APPLICATION
R4133722	572 FD73535 FE73535	Bendix 33722 EIS EW75891 Raybestos WC37254 Wagner F73537	Ford

1 1/4" Bore

SINGLE CYLINDER UPPER — RIGHT

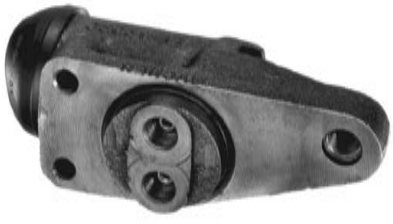

7/16"-24 Port with tube seat
Tube seats in both ports

For Rebuild, Use Repair Kit R4166923

MERITOR NO.	CASTING NO.	REPLACES	APPLICATION
R4133723	573 FD73536 FE73536	Bendix 33723 EIS EW75890 Raybestos WC37255 Wagner F73538	Ford

WHEEL CYLINDERS

Listed by Bore Size

1 1/4" Bore — SINGLE CYLINDER — LEFT

7/16"-20 Port (Banjo Fitting)

For Rebuild, Use Repair Kit R4166923

MERITOR NO.	CASTING NO.	REPLACES	APPLICATION
R4133315	29268 3067 3069 572 618306 618331 73535 FE3067 FE3069 FE73535	EIS EW8806 ITE 73232R11 Wagner F8806	GMC Mack ITE White

1 1/4" Bore — SINGLE CYLINDER — RIGHT

7/16"-20 Port (Banjo Fitting)

For Rebuild, Use Repair Kit R4166923

MERITOR NO.	CASTING NO.	REPLACES	APPLICATION
R4133316	29266 3070 618307 FE3068 FE3070 FE73536	EIS EW8807 ITE 73233R11 Wagner F8807	GMC Mack ITE White

1 3/8" Bore — SINGLE CYLINDER — LEFT

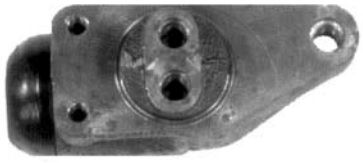

7/16"-20 Port

For Rebuild, Use Repair Kit R4166925

MERITOR NO.	CASTING NO.	REPLACES	APPLICATION
R4133379	572 670 FE32351 FE32359	EIS EW32357 GM 2404320 Wagner F32357	Chevrolet GMC

1 3/8" Bore — SINGLE CYLINDER — RIGHT

7/16"-20 Port

For Rebuild, Use Repair Kit R4166925

MERITOR NO.	CASTING NO.	REPLACES	APPLICATION
R4133380	618797 671 FE32350 FE32352	EIS EW32358 GM 2404319 Wagner F32358	Chevrolet GMC

1 3/8" Bore — SINGLE CYLINDER

7/16"-20 Port - Banjo

For Rebuild, Use Repair Kit R4166925

MERITOR NO.	CASTING NO.	REPLACES	APPLICATION
R4133136	—	Bendix 33136 Raybestos WC15306	—

1 3/8" Bore — SINGLE CYLINDER

7/16"-20 Port tube seat
Bleeder Screw - E-4093

For Rebuild, Use Repair Kit R4166925

MERITOR NO.	CASTING NO.	REPLACES	APPLICATION
R4133396	—	Bendix 33396 Raybestos WC4419	—

WHEEL CYLINDERS

Listed by Bore Size

1 1/2" Bore — SINGLE CYLINDER UPPER — LEFT AND RIGHT

7/16"-20 Port with Port for Jumper Line

For Rebuild, Use Repair Kit R4166818

MERITOR NO.	CASTING NO.	REPLACES	APPLICATION
R4133256	16925 302862 574 FD16925	Bendix 33256 Ford B8T-2261 C8TZ-2261F C8TZ-2262F Gunite (K-H) 7065 Wagner F28850	Ford with Bendix 14 1/8" x 3 1/2" Rear Brakes

1 1/2" Bore — SINGLE CYLINDER LOWER — LEFT AND RIGHT

7/16"-20 Port with Port for Jumper Line

For Rebuild, Use Repair Kit R4166818

MERITOR NO.	CASTING NO.	REPLACES	APPLICATION
R4133257	16925 302862 5461734 574 FD16925	Bendix 33257 Ford B8T-2262A Gunite (K-H) 7065 Wagner F28851	Ford with Bendix 14 1/8" x 3 1/2" Rear Brakes

1 1/2" Bore — SINGLE CYLINDER UPPER AND LOWER — LEFT AND RIGHT

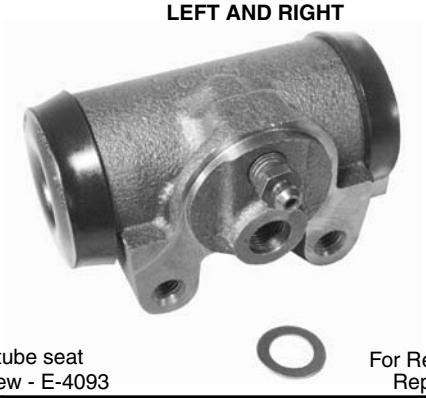

1/2"-20 Port tube seat
Bleeder Screw - E-4093

For Rebuild, Use Repair Kit N/A

MERITOR NO.	CASTING NO.	REPLACES	APPLICATION
R4133312	—	Bendix 33312 Raybestos WC37317	—

1 1/2" Bore — SINGLE CYLINDER UPPER AND LOWER — LEFT AND RIGHT

7/16"-24 Port

For Rebuild, Use Repair Kit R4166818

MERITOR NO.	CASTING NO.	REPLACES	APPLICATION
R4133390	5461734 640 FD28663	Bendix 33390 Ford C0TT-2262A Gunite (K-H) 7074 Wagner F28661	Dodge, Ford with Bendix 15" x 4" Rear Brakes

1 1/2" Bore — SINGLE CYLINDER UPPER AND LOWER — LEFT AND RIGHT

7/16"-24 Port

For Rebuild, Use Repair Kit N/A

MERITOR NO.	CASTING NO.	REPLACES	APPLICATION
R4133580	599 FD19106	Bendix 33580 ITE 684833R91 Wagner F26159	ITE with Wagner 15" x 4", 15" x 5", 15" x 7" Rear Brakes

1 1/2" Bore — SINGLE CYLINDER UPPER AND LOWER — LEFT AND RIGHT

7/16"-24 Port

For Rebuild, Use Repair Kit R4166818

MERITOR NO.	CASTING NO.	REPLACES	APPLICATION
R4133607	29538C 29662656 29663197 302862 55729 725 FE83712	Bendix 33607 Ford C8TZ-2261B D1TZ-2261A Gunite (K-H) 7008 Wagner F71237 F78743	Ford with Gunite(K-H) 15" x 4", 15" x 5" Rear Brakes

WHEEL CYLINDERS

Listed by Bore Size

1 1/2" Bore — SINGLE CYLINDER UPPER AND LOWER — LEFT

7/16"-24 Port with tube seat

For Rebuild, Use Repair Kit R4166928

MERITOR NO.	CASTING NO.	REPLACES	APPLICATION
R4133655	41-TV152656K 5471641 737 FD83584	Bendix 33655 Chev/GM 2620632 5472820 Gunite (K-H) 7054 Wagner F78744	Chev/GM with GM 15" x 4", 15" x 5" Rear Brakes

1 1/2" Bore — SINGLE CYLINDER UPPER AND LOWER — RIGHT

7/16"-24 Port with tube seat

For Rebuild, Use Repair Kit R4166928

MERITOR NO.	CASTING NO.	REPLACES	APPLICATION
R4133656	5471642 738 FD83585	Bendix 33656 Chev/GM 2620633 5472821 Gunite(K-H) 7055 Wagner F78745	Chev/GM with GM 15" x 4", 15" x 5" Rear Brakes

1 1/2" Bore — SINGLE CYLINDER UPPER AND LOWER — LEFT AND RIGHT

7/16"-20 Port (Banjo Fitting)

For Rebuild, Use Repair Kit R4166818

MERITOR NO.	CASTING NO.	REPLACES	APPLICATION
R4133336	599 618378 618383 FD19106 K-2 K2	Bendix 33336 Chev/GM 2331945 Ford B8QH-2261A ITE 137448R91 Wagner F19746	Chev/GM, Ford, ITE with Wagner 15" x 5" Rear Brakes

These illustrations are intended to show the configurations of **Meritor parts only**. The outward appearance of these parts may or may not match OEM or competitive parts.

The Photographs and Illustrations shown in this catalog are typical and may vary slightly in detail from actual parts due to manufacturing tolerances, and/or OEM design differences. The general configuration of the part will be the same, i.e. port positions, mounting holes, etc.

1 1/2" Bore — SINGLE CYLINDER

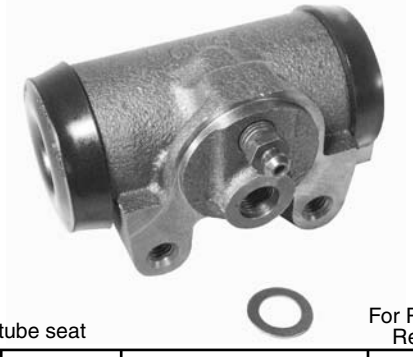

1/2"-20 Port tube seat

For Rebuild, Use Repair Kit N/A

MERITOR NO.	CASTING NO.	REPLACES	APPLICATION
R4133312	—	Bendix 33312 Raybestos WC37317	Chev/GM, Ford, ITE

WHEEL CYLINDERS

Listed by Bore Size

1 1/2" Bore — SINGLE CYLINDER — LEFT

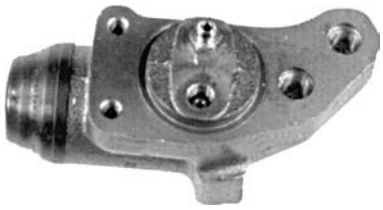

7/16"-20 Port, 7/16"-24 Port with tube seat

For Rebuild, Use Repair Kit R4166448

MERITOR NO.	CASTING NO.	REPLACES	APPLICATION
R4133905	FE86450	EIS EW155078 ITE 498216C91 Wagner F86444	ITE

1 1/2" Bore — SINGLE CYLINDER — RIGHT

7/16"-20 Port, 7/16"-24 Port with tube seat

For Rebuild, Use Repair Kit R4166448

MERITOR NO.	CASTING NO.	REPLACES	APPLICATION
R4133906	FE86451	EIS EW155079 ITE 498217C91 Wagner F86445	ITE

1 5/8" Bore — SINGLE CYLINDER — FRONT

M12 x 1.00 Inlet Port
M8 x 1 1/4"

Repair Kit Not Available

MERITOR NO.	CASTING NO.	REPLACES	APPLICATION
R413635	V-1145	Leland L2057 Mercedes-Benz 044-420-0018 344-420-7218	Magirus Volvo

1 5/8" Bore — UPPER AND LOWER — LEFT AND RIGHT

7/16"-24 Port

NOTE: Some applications have 7/16"-20 ports.
Fits 1961-1965 Fords, Intl.
Wagnor F19107 S.O.S. only

For Rebuild, Use Repair Kit R4166689

MERITOR NO.	CASTING NO.	REPLACES	APPLICATION
R4133338	19108 29662667 2966341 598 618316 618372 FD19108 FD24491	Bendix 33338 Chev/GM 3772241 5473145 EIS EW24489 Ford C5TZ-2261B Gunite (K-H) 7057 ITE 684834R91 Wagner F24489	Chev/GM, Dodge, Ford, ITE with Wagner 15" x 5", 15" x 6", 15" x 7", 16" x 5" Rear Brakes

The Meritor Product Photo and Illustration Sections are to be used as a supplemental aid in identifying the configurations and specifications of many of the hydraulic brake parts found in this Catalog.

CAUTION

IN NO CASE SHOULD THESE PICTURES & ILLUSTRATIONS BE USED TO MAKE PRODUCT SUBSTITUTIONS. USE THE APPROPRIATE CATALOG APPLICATION DATA TO DETERMINE THE CORRECT PART.

WHEEL CYLINDERS

Listed by Bore Size

1 5/8" Bore

SINGLE CYLINDER UPPER AND LOWER — LEFT AND RIGHT

7/16"-24 Port

Repair Kit Not Available

MERITOR NO.	CASTING NO.	REPLACES	APPLICATION
R4133606	19541C 29541 55753 725 FE83712 FE83713	Bendix 33606 Ford C8TZ-2261C Gunite (K-H) 7009 Wagner F71238	Ford with Gunite(K-H) 15" x 5" Rear Brakes

Many parts may have the same external dimensions, but have different internal dimensions and/or materials. These differences make it imperative that only the application guide be used to determine the suitability of a particular part.

1 5/8" Bore

SINGLE CYLINDER LEFT HAND

DISCONTINUED

7/16"-24 Port

For Rebuild, Use Repair Kit SP7895S

MERITOR NO.	CASTING NO.	REPLACES	APPLICATION
—	68660520	Ford E4HZ-2262B/D Lucas 201185 68919016 68919065	Ford with Lucas 15" x 5" Rear Brakes

1 5/8" Bore

SINGLE CYLINDER RIGHT HAND

DISCONTINUED

7/16"-24 Port

For Rebuild, Use Repair Kit SP7895S

MERITOR NO.	CASTING NO.	REPLACES	APPLICATION
—	68660521	Ford E4HZ-2261B/D Lucas 201186 68919017 68919066	Ford with Lucas 15" x 5" Rear Brakes

1 5/8" Bore

EXPANDER LEFT HAND

DISCONTINUED

7/16"-24 Port

For Rebuild, Use Repair Kit SP7895S

MERITOR NO.	CASTING NO.	REPLACES	APPLICATION
—	68660579	Ford E4HZ-2C198G E6HZ-2C198D/G Lucas 201181 68919061 68937161	Ford 1986-Up with Lucas 15" x 5" Rear Brakes

1 5/8" Bore

EXPANDER RIGHT HAND

DISCONTINUED

7/16"-24 Port

For Rebuild, Use Repair Kit SP7895S

MERITOR NO.	CASTING NO.	REPLACES	APPLICATION
—	68660580	Ford E4HZ-2C198D/H E6HZ-2C198C/H Lucas 201182 68919062 68937162	Ford 1986-Up with Lucas 15" x 5" Rear Brakes

WHEEL CYLINDERS

Listed by Bore Size

1 3/4" Bore — SINGLE CYLINDER UPPER AND LOWER — LEFT AND RIGHT

7/16"-20 Port tube seat
Bleeder Screw R41301198

For Rebuild, Use Repair Kit R4166917

MERITOR NO.	CASTING NO.	REPLACES	APPLICATION
R4133335	—	Bendix 33335 Raybestos WC19109	—

1 3/4" Bore — SINGLE CYLINDER UPPER AND LOWER — LEFT AND RIGHT

7/16"-24 Port

For Rebuild, Use Repair Kit R4166917

MERITOR NO.	CASTING NO.	REPLACES	APPLICATION
R4133400	29662667 29663349 604 A22667 FD19110 K19	Bendix 33400 Chev/GM 3772245 473186 54731545 Ford C5TZ-2261A Gunite(K-H) 7059 ITE 684835R91 Wagner F26172	Bendix Chev/GM Ford ITE with Wagner 15" x 7" Rear Brakes

1 3/4" Bore — SINGLE CYLINDER LEFT HAND

7/16"-24 Port

For Rebuild, Use Repair Kit SP7871S

MERITOR NO.	CASTING NO.	REPLACES	APPLICATION
201183	68660520	Ford E4HZ-2262A/C F2HZ-2262A Lucas 201183 68919014 68919063 68919071	Ford with Lucas 15" x 6", 15" x 7" Rear Brakes

1 3/4" Bore — SINGLE CYLINDER RIGHT HAND

7/16"-24 Port

For Rebuild, Use Repair Kit SP7871S

MERITOR NO.	CASTING NO.	REPLACES	APPLICATION
201184	68660521	Ford E4HZ-2261A/C F2HZ-2261A Lucas 201184 68919015 68919064 68919072	Ford with Lucas 15" x 6", 15" x 7" Rear Brakes

1 3/4" Bore — EXPANDER LEFT HAND

7/16"-24 Port

For Rebuild, Use Repair Kit SP7872S

MERITOR NO.	CASTING NO.	REPLACES	APPLICATION
201179	68660579	Ford E4HZ-2C198A/E E6HZ-2C198B/E F2HZ-2C198A 201179 Lucas 68919059 68937159	Ford 1986-Up with Lucas 15" x 6", 15" x 7" Rear Brakes

1 3/4" Bore — EXPANDER RIGHT HAND

7/16"-24 Port

For Rebuild, Use Repair Kit SP7872S

MERITOR NO.	CASTING NO.	REPLACES	APPLICATION
201180	68660580	Ford E4HZ-2C198C/F E6HZ-2C198A/F F2HZ-2C198B Lucas 201180 68919060 68937160	Ford 1986-Up with Lucas 15" x 6",15" x 7" Rear Brakes

WHEEL CYLINDERS

Listed by Bore Size

1 3/4" Bore

SINGLE CYLINDER — REAR

M12 x 1.00 Inlet Port
M8 x 1 1/4" Bleed Port

MERITOR NO.	CASTING NO.	REPLACES	APPLICATION
R413636	V-1122	Leland L2070 Mercedes-Benz 044-420-0118	Bendix Chevrolet GMC Isuzu

1 7/8" Bore

SINGLE CYLINDER UPPER AND LOWER — LEFT AND RIGHT

7/16"-20 Port (Banjo Fitting)
Note: Supplied with Bleeder Seat R41301198

For Rebuild, Use Repair Kit R4166897

MERITOR NO.	CASTING NO.	REPLACES	APPLICATION
R4133420	601 FD19112	Bendix 33420 Chev/GM 2331949 5473156 Ford B6QH-2261B Wagner F19111	Chev/GM, Ford with Wagner 16" x 6" Rear Brakes

1 7/8" Bore

SINGLE CYLINDER UPPER AND LOWER — LEFT AND RIGHT

7/16"-24 Port with Tube
Note: Supplied w/ Bleeder Seat R41301198

For Rebuild, Use Repair Kit R4166897

MERITOR NO.	CASTING NO.	REPLACES	APPLICATION
R4133584	30506 FD19112	Bendix 33584 EIS EW26181 Ford C8TZ-2262E ITE 260551C91 Raybestos WC37222 Wagner F26181	Bendix EIS Ford ITE with Wagner 16" x 6" Rear Brakes Raybestos

BRAKE FITTING AND HOSE GASKETS

	MERITOR NO.	REPLACES	O.D.	I.D.	THICK
	R4533757	Wagner F602 Bendix 96002	13/16"	1/2"	1/32"
	R45616972	Wagner F5795 Bendix 96003	5/8"	25/64"	1/16"
	R45616973	Wagner F5035 Bendix 96004	13/16"	7/16"	1/16"

HYDRAULIC BRAKE CYLINDER BLEEDER SCREWS

	MERITOR NO.	REPLACES	THREAD	HEX	O.A.L.
	R4148654	Wagner F6646 Bendix 94001	1/4"-28	1/4"	59/64"
	R4194002	Wagner F57188 Bendix 94002	5/16"-24	5/16"	1"
	R41302861	Wagner F33512 Bendix 94008	3/8"-24	3/8"	1 1/2"
	R41618406	Wagner F6858 Bendix 94005	3/8"-24	3/8"	1 11/64"
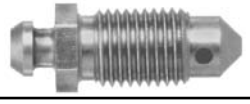	**R41301198**	Wagner F11596 Bendix 94009	7/16"-20	7/16"	1.27"
	R4194010	Wagner F24493 Bendix 94010	7/16"-24	7/16"	1 15/32"
	R4194012 32mm	Wagner F105400 Bendix 94012	M7 x 1.0	—	
	R4194015	Wagner F105408 Bendix 94020	M7 x 1.0	—	38.5mm
	R4194013	Wagner F105182 Bendix 94013	M8 x 1.25	—	23.5mm
	R4194014	Wagner F104509 Bendix 94014	M10 x 1.0	—	38.5mm
	R4194015	Wagner F105407 Bendix 94015	M10 x 1.5	—	25.5mm
	69540212	— —	—	—	—
	R4111753	— —	—	—	—
Photo Not Available At Time of Printing	**R40152432**	— —	—	—	—
	R402513823	Haldex MQ5200	—	—	—

MASTER CYLINDER CASTING NUMBER INDEX

MASTER CYLINDER CASTING NO.	MERITOR MASTER CYLINDER NO.	PAGE NO.
32	**R4111046**	6-150
39	**R4111122**	6-155
45	**R4111119**	6-154
55	**R4111123**	6-155
65	**R4111129**	6-154
97	**R4111266**	6-154
121	**R4112058**	6-148
142	**R4111944**	6-147
144	**R4111730**	6-150
144	**R4111730**	6-152
144	**R4111732**	6-145
144	**R4111732**	6-147
146	**R4111669**	6-141
146	**R4111854**	6-141
155	**R4111633**	6-143
162	**R4111930**	6-138
162	**R4111931**	6-138
169	**R4111676**	6-144
169	**R4111682**	6-144
169	**R4111931**	6-138
173	**R4111773**	6-155
174	**R418234**	6-138
184	**R4111982**	6-153
187	**R4111860**	6-147
190	**R4111856**	6-144
190	**R4111861**	6-143
190	**R4112007**	6-143
191	**R4111944**	6-147
193	**R4111989**	6-150
194	**R4110357**	6-149
194	**R4112058**	6-148
194	**R4112058**	6-148
194	**R4112219**	6-149
195	**R4112178**	6-149
195	**R4112218**	6-143
197	**R4111865**	6-149
198	**R4111896**	6-136
200	**R4111905**	6-140
204	**R4112008**	6-145
205	**R418239**	6-139
205	**R4111923**	6-140
205	**R4111926**	6-140
234	**R4112183**	6-137
235	**R4112197**	6-146
235	**R4112198**	6-144
235	**R4112199**	6-136
235	**R4112199**	6-141
235	**R418229**	6-141
235	**R418232**	6-137
236	**R418233**	6-138
238	**R4112220**	6-150
238	**R4113022**	6-150
238	**R418244**	6-152
243	**R418225**	6-137
243	**R418226**	6-137
260	**R4111836**	6-136
265	**R4111668**	6-153
2704	**R4111119**	6-154
4570C	**R4111046**	6-150
23123C	**R4111129**	6-154
23126	**R4111129**	6-154
29881C	**R4111732**	6-148
29903-C	**R4111896**	6-136
29910-C	**R4111395**	6-148
30014-C	**R4110436**	6-143
30070	**R4111454**	6-152
30087-C	**R4112200**	6-146
30097-C	**R4111775**	6-146
41208	**R4111266**	6-154
61706	**R4111129**	6-154
224000	**R4111917**	6-136
300406	**R4110432**	6-143
300459	**R4110431**	6-142
300459-C	**R4110432**	6-143
616576	**R4111046**	6-150
616812	**R4111119**	6-154
616827	**R4111122**	6-155
617283	**R4111266**	6-154
617298	**R4111266**	6-154
618101	**R4111129**	6-154
618112	**R4111119**	6-154
618127	**R4111122**	6-155
618182	**R4111123**	6-155
2223505	**R4111995**	6-159
2223771	**R4111395**	6-148
2225771	**R4111395**	6-148
2229071	**R4111583**	6-152
2229331	**R4111896**	6-136
2229581	**R4111676**	6-144
2229581	**R4111682**	6-144
2230600	**R4111892**	6-158
2230600	**R4111909**	6-158
2230600	**R4111910**	6-158
2230600	**R4111912**	6-158
2230600	**R4111992**	6-158
2230600	**R4111994**	6-157
2230600	**R4111999**	6-158
2230605	**R4111898**	6-160
2230605	**R4111908**	6-160
2230605	**R4111994**	6-159
2231137	**R4111641**	6-153
2231396	**R4111865**	6-149
2259705	**R4112466**	6-153
3580095	**R4111633**	6-143
3766185	**R4111860**	6-147
5450226	**R4111122**	6-155
5460345	**R4111944**	6-147
5461282	**R4111046**	6-150
5461368	**R4111046**	6-150
5468115	**R4111732**	6-148
5470409	**R4111944**	6-147
5470410	**R4111944**	6-147
5472003	**R4111730**	6-150
5472003	**R4111732**	6-145
5472003	**R4111732**	6-147
54720003	**R4111732**	6-148
6472009	**R4111730**	6-150
18006819	**R4111905**	6-140
18007278	**R4111989**	6-150
18010023	**R4111923**	6-140
18010023	**R4111926**	6-140
18012622	**R418233**	6-138
18012985	**R418244**	6-152
23123-C	**R4111129**	6-154
29825-C	**R4111266**	6-154
30067-C	**R4111123**	6-155
30076-C	**R4111913**	6-136
30087-C	**R4112200**	6-146
30097-C	**R4111775**	6-146
4570C	**R4111046**	6-150
777C	**R4111122**	6-155
CFD11	**R411905**	6-140
D60A2155AA	**R4111669**	6-141
D60A2155AA	**R4111854**	6-141
DM01	**R4111801**	6-136
F72283	**R4111630**	6-157
FD2347	**R4111151**	6-156
FD23477	**R4111150**	6-154
FD2704	**R4111119**	6-154
FD4570	**R4111046**	6-150
FD57529	**R4111451**	6-156
FD57576	**R4111451**	6-156
FE1099	**R417785**	6-156
FE1575	**R4111123**	6-155
FE1575	**R4111772**	6-157
FE1645	**R4111772**	6-157
FE23126	**R4111129**	6-154
FE23127	**R4111129**	6-154
FE41207	**R4111634**	6-157
FE57570	**R4111454**	6-152
FE57577	**R4111451**	6-156
FE57579	**R4111773**	6-155
FE777	**R4111122**	6-155
FF1099	**R417785**	6-156
FF1575	**R4111772**	6-157
FF1645	**R4111772**	6-157
FF43812	**R4111122**	6-155
FF43812	**R4111624**	6-159
FF48468	**R4111119**	6-154
FF48468	**R4111626**	6-154
FF54846	**R4111455**	6-159
FF6456	**R4111913**	6-136
FF57571	**R4111456**	6-155
FF64506	**R4111629**	6-156
FF64506	**R4111631**	6-156
FF67572	**R4111618**	6-157
FF70533	**R4111619**	6-156
FF78951	**R4111944**	6-147
FF84785	**R4111732**	6-148
FF85573	**R4111395**	6-148
K801	**R4111801**	6-136
S230	**R4111119**	6-154

MASTER CYLINDERS

Listed by Bore Size

3/4" Bore

1/2"-20 (2) Outlets

Repair Kit Not Available

MERITOR NO.	CASTING NO.	REPLACES	APPLICATION
R4111913	FF64506 30076-C	Ford D7HZ-2140A Bendix 11913 EIS E150288 Wagner F88856	Ford

7/8" Bore

M10 x 1.0, M10 x 1.0 Outlets

Repair Kit Not Available

MERITOR NO.	CASTING NO.	REPLACES	APPLICATION
R418254	—	EIS E96931 Nissan 46010 05W01 Wagner F96931	Nissan

7/8" Bore

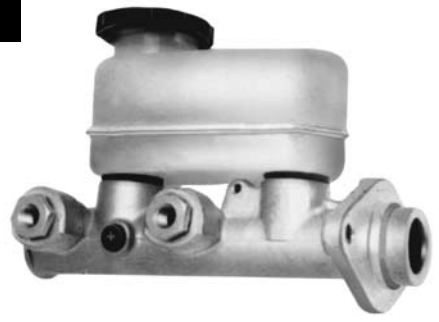

M10 x 1.0, M10 x 1.0 Outlets

Repair Kit Not Available

MERITOR NO.	CASTING NO.	REPLACES	APPLICATION
R4111937	260	Bendix 11937 EIS E98228 Nissan 46010 13W10 46010 48W00 Wagner F105252	Nissan

7/8" Bore

M10 x 1.25, M10 x 1.25 Outlets

Repair Kit Not Available

MERITOR NO.	CASTING NO.	REPLACES	APPLICATION
R4111917	224000	Bendix 11917 12002 EIS E105931 Ford E17Z-2140A Mazda 8859 43 990 Wagner F105263	Mazda

7/8" Bore

M10 x 1.0, M10 x 1.0 Outlets

Repair Kit Not Available

MERITOR NO.	CASTING NO.	REPLACES	APPLICATION
R4111801	K801 DM01	Bendix 11801 12081 EIS E98028 Mitsubishi MB081621 MB081624 MB316479 Wagner F100986	Dodge, Mitsubishi, Plymouth

15/16" Bore

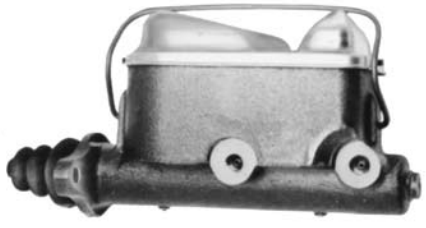

9/16"-18, 1/2"-20 Outlets

Repair Kit Not Available

MERITOR NO.	CASTING NO.	REPLACES	APPLICATION
R4111896	198 2229331 29903-C	Bendix 11896 Chrysler J3241807 Eagle/Jeep 83300113 EIS E105876 Wagner F105876	Jeep

MASTER CYLINDERS

Listed by Bore Size

15/16" Bore

7/16"-24, 3/8"-24, 9/16"-18 Outlets

Repair Kit Not Available

MERITOR NO.	CASTING NO.	REPLACES	APPLICATION
R4112183	234	Bendix 12183 EIS E150044 Ford E69Z-2140A Wagner F112593	Ford

15/16" Bore

7/16"-24, 9/16"-18 Outlets

Repair Kit Not Available

MERITOR NO.	CASTING NO.	REPLACES	APPLICATION
R418225	243	Bendix 12203 EIS E150052 Ford E6TZ-2140A Wagner F113427	Ford

15/16" Bore

3/8"-24, 1/2"-20 Outlets

For Rebuild, Use Repair Kit R4122324

MERITOR NO.	CASTING NO.	REPLACES	APPLICATION
R418226	243	Bendix 12202 EIS E150053 Ford E6TZ-2140B Wagner F113426	Ford

15/16" Bore

7/16"-24, 9/16"-18 Outlets

Repair Kit Not Available

MERITOR NO.	CASTING NO.	REPLACES	APPLICATION
N/A	234	Bendix 12183 EIS E150079 Ford E79Z-2140A Wagner F114075	Ford

15/16" Bore

7/16"-24, 9/16"-18 Outlets

Repair Kit Not Available

MERITOR NO.	CASTING NO.	REPLACES	APPLICATION
R418232	235	Bendix 12203 EIS E150086 Ford E7TZ-2140D Wagner F120371	Ford

15/16" Bore

M10 x 1.0, M10 x 1.0 Outlets

Repair Kit Not Available

MERITOR NO.	CASTING NO.	REPLACES	APPLICATION
R418235	—	EIS E150102 Mitsubishi MB407753 Wagner F114605	Dodge

MASTER CYLINDERS

Listed by Bore Size

15/16" Bore

9/16"-18, 7/16"-24 Outlets

Repair Kit Not Available

MERITOR NO.	CASTING NO.	REPLACES	APPLICATION
R4111930	162	Bendix 11930 EIS E98271 Ford E3TZ-2140A Wagner F106433	Ford

15/16" Bore

1/2"-20, 3/8"-24 Outlets

Repair Kit Not Available

MERITOR NO.	CASTING NO.	REPLACES	APPLICATION
R4111931	162 169	Bendix 11931 EIS E98272 Ford D6TZ-2140L E3TZ-2140B Wagner F106431	Ford

15/16" Bore

(2) 7/16"-24 Outlets

MERITOR NO.	CASTING NO.	REPLACES	APPLICATION
R4110375	—	Dodge 4683264 Bendix 13049 EIS E150614 Wagner F131512	Chrysler

24mm Approx. 15/16" Bore

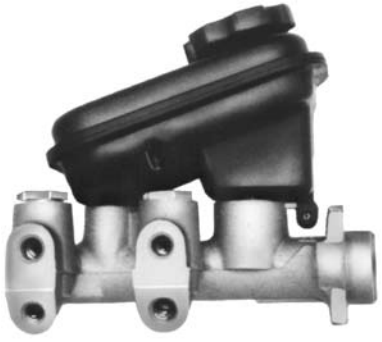

M11 x 1.5, M13 x 1.5 Outlets

Repair Kit Not Available

MERITOR NO.	CASTING NO.	REPLACES	APPLICATION
R418233	236 18012622	EIS 150090 GM 18011057 Wagner F120600	Chevrolet, Pontiac

24mm Approx. 15/16" Bore

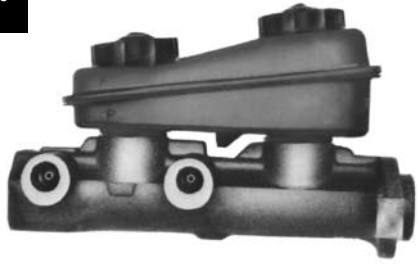

1/2"-20, 9/16"-20 Outlets

Repair Kit Not Available

MERITOR NO.	CASTING NO.	REPLACES	APPLICATION
R418234	174	Chrysler 4294312 4294721 EIS E150093 Wagner F114497	Dodge

24mm Approx. 15/16" Bore

1/2"-20
9/16"-18 Outlets

For Rebuild, Use Repair Kit R4110391

MERITOR NO.	CASTING NO.	REPLACES	APPLICATION
R4111738	—	GM 1800 3755 1800 5259 1800 6633 Chevrolet Bendix 11738 EIS E77085 Wagner F101253	

MASTER CYLINDERS

Listed by Bore Size

24mm
Approx. 15/16" Bore

1/2"-20
9/16"-18 Outlets

For Rebuild, Use Repair Kit R4122494

MERITOR NO.	CASTING NO.	REPLACES	APPLICATION
R411739	—	GM 18005321 18005771 18006635 18010386 Bendix 11739 Wagner F101262 EIS E101262	Chevrolet

24mm
Approx. 15/16" Bore

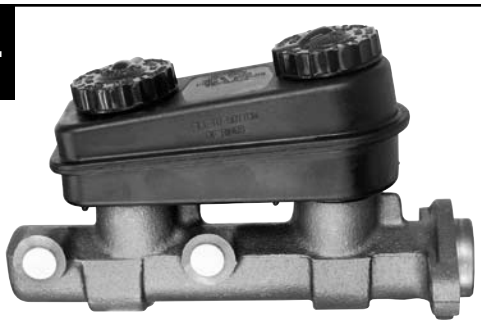

3/8"-24,
3/8"-24 Outlets

Repair Kit Not Available

MERITOR NO.	CASTING NO.	REPLACES	APPLICATION
R4111983	—	Dodge 4294152 4294946 4318720 4485299 Bendix 11983 EIS E105886 E98286 Wagner F108168	Chrysler

24mm
Approx. 15/16" Bore

M12 x 1, M10 x 1,
M11 x 1.5, M13 x 1.5 Outlets

Repair Kit Not Available

MERITOR NO.	CASTING NO.	REPLACES	APPLICATION
R4110344	—	Bendix 12451 EIS E150090 GM 18016550 18017555 Wagner F120600	Chevrolet

24mm
Approx. 15/16" Bore

(2) M10 x 1 Outlets

Repair Kit Not Available

MERITOR NO.	CASTING NO.	REPLACES	APPLICATION
R4110362	—	Bendix 12908 EIS E150569 GM 18018829	Chevrolet

24mm
Approx. 15/16" Bore

9/16"-20,
1/2"-20 Outlets

Repair Kit Not Available

MERITOR NO.	CASTING NO.	REPLACES	APPLICATION
R4110366	—	Dodge 4294312 52006828 Bendix 12837 EIS E150580 Wagner F128340 R128340	Dodge

24mm x 1 1/4"
Approx. 15/16" x 1 1/4" Bore

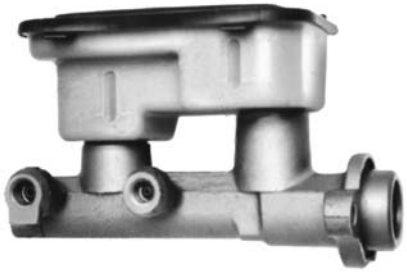

1/2"-20, 9/16"-18 Outlets

Repair Kit Not Available

MERITOR NO.	CASTING NO.	REPLACES	APPLICATION
R418239	205	EIS E150126 Wagner F116625	Chevrolet, GMC

MASTER CYLINDERS

Listed by Bore Size

24mm x 1 1/4"
Approx. 15/16" x 1 1/4" Bore

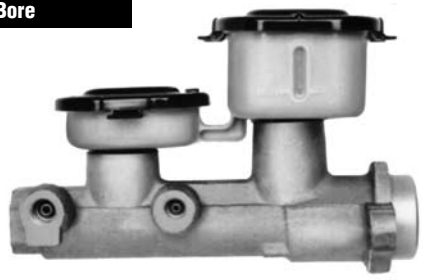

1/2" x 20, 9/16"-18 Outlets

Repair Kit Not Available

MERITOR NO.	CASTING NO.	REPLACES	APPLICATION
R418242	—	Bendix 12222 EIS E150192 GM 18012748 18013439 Wagner F114170	Chevrolet, GMC

24mm x 1 1/4"
Approx. 15/16" x 1 1/4" Bore

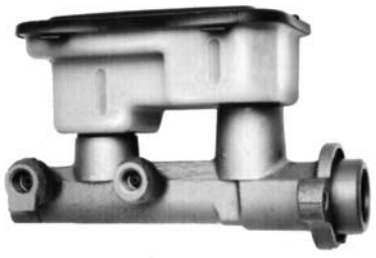

1/2"-20, 9/16"-18 Outlets

Repair Kit Not Available

MERITOR NO.	CASTING NO.	REPLACES	APPLICATION
R4111905	18006819 200 CFD11	Bendix 11905 EIS E77092 GM 18009371 18009811 18013432 Wagner F105801	Chevrolet, GMC

24mm x 36mm
Approx. 15/16" x 1 7/16" Bore

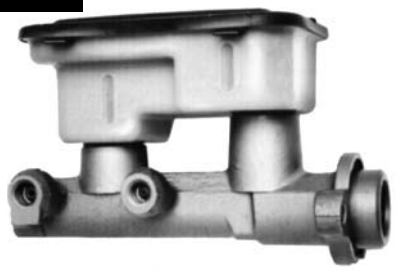

1/2"-20, 9/16"-18 Outlets

Repair Kit Not Available

MERITOR NO.	CASTING NO.	REPLACES	APPLICATION
R4111923	18010023 205	Bendix 11923 12266 EIS E98280 GM 18009879 18012322 18013433 Wagner F107747	Chevrolet, GMC

24mm x 36mm
Approx. 15/16" x 1 7/16" Bore

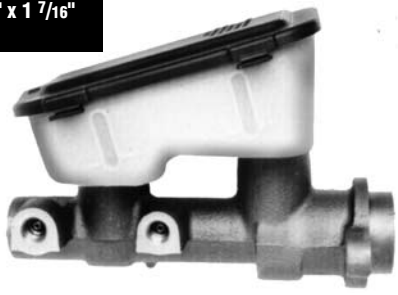

1/2"-20, 9/16"-18 Outlets

Repair Kit Not Available

MERITOR NO.	CASTING NO.	REPLACES	APPLICATION
R4111926	18010023 205	Bendix 11926 EIS E98281 GM 18009816 18011916 18013429 Wagner F107050	Chevrolet, GMC

24mm x 36mm
Approx. 15/16" x 1 7/16" Bore

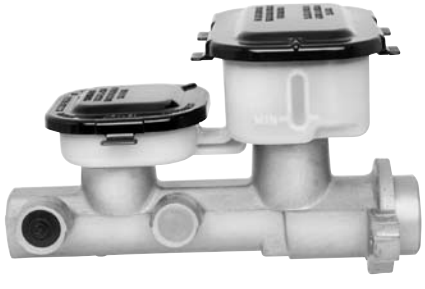

1/2"-20
9/16"-18 Outlets

MERITOR NO.	CASTING NO.	REPLACES	APPLICATION
R4112342	—	GM 18D1 4308 Bendix 12342 EIS E150388 Wagner F128098	Chevrolet

24mm x 36mm
Approx. 15/16" x 1 7/16" Bore

1/2"-20,
9/16"-18 Outlets

Repair Kit Not Available

MERITOR NO.	CASTING NO.	REPLACES	APPLICATION
R4110379	—	EIS E150618 GM 18029949	GMC

MASTER CYLINDERS

Listed by Bore Size

1" Bore

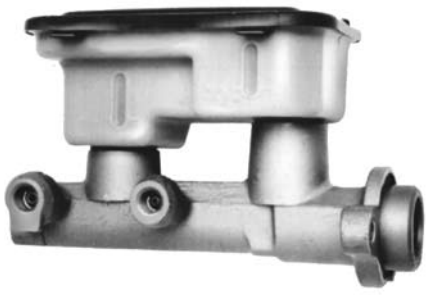

1/2"-20, 9/16"-18 Outlets

Repair Kit Not Available

MERITOR NO.	CASTING NO.	REPLACES	APPLICATION
R418210	—	Bendix 11889 EIS E104466 GM 10813434 18007971 Wagner F104466	Chevrolet

1" Bore

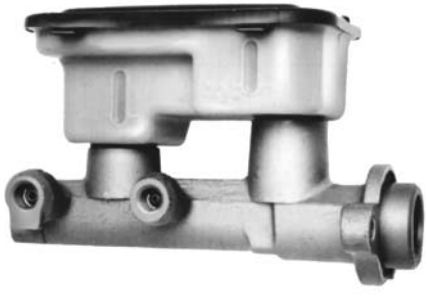

1/2"-20, 9/16"-18 Outlets

Repair Kit Not Available

MERITOR NO.	CASTING NO.	REPLACES	APPLICATION
R4111889	—	Bendix 11889 EIS E104466 GM 10813434 18007971 Wagner F104466	Chevrolet

1" Bore

7/16"-24, 9/16"-18 Outlets

Repair Kit Not Available

MERITOR NO.	CASTING NO.	REPLACES	APPLICATION
R418229	235	EIS E150078 Wagner F120370	Ford

1" Bore

7/16"-24, 9/16"-18 Outlets

Repair Kit Not Available

MERITOR NO.	CASTING NO.	REPLACES	APPLICATION
R4112199	235	EIS E150078 Wagner F120370	Ford

1" Bore

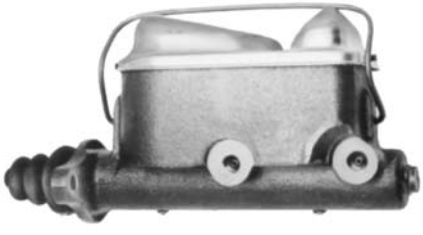

1/2"-20, 7/16"-24 Outlets

Repair Kit Not Available

MERITOR NO.	CASTING NO.	REPLACES	APPLICATION
R4111669	146 D60A2155AA	Bendix 11669 EIS E88872 Ford D6TZ-2140B D6UZ-2140A Wagner F97924	Ford

1" Bore

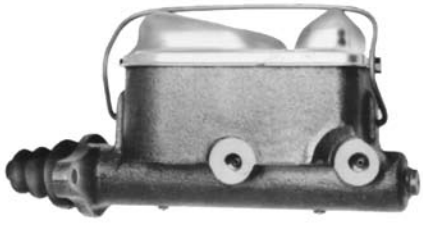

9/16"-18", 7/16"-24 Outlets

Repair Kit Not Available

MERITOR NO.	CASTING NO.	REPLACES	APPLICATION
R4111854	146 D60A2155AA	Bendix 11854 EIS E97934 Ford D7TZ-2140C Wagner F97934	Ford

MASTER CYLINDERS

Listed by Bore Size

1" Bore

9/16"-18
1/2"-20 Outlets

Repair Kit
Not Available

MERITOR NO.	CASTING NO.	REPLACES	APPLICATION
R4111582	—	GM 14004846 Bendix 11582 EIS E77068 Wagner F84052	Chevrolet

1" Bore

1/2"-20
7/16"-24 Outlets

Repair Kit
Not Available

MERITOR NO.	CASTING NO.	REPLACES	APPLICATION
R4111857	—	Ford E0TZ-2140C Bendix 11857 EIS E88872 Wagner F102418	Ford

1" Bore

M12 x 1, M10 x 1

MERITOR NO.	CASTING NO.	REPLACES	APPLICATION
R4110354	—	Bendix 12575 EIS E150234 Ford FOTZ-2140A Wagner F122576 F122577	Ford

1" Bore

M 10 x 1
M 16 x 1 Outlets

Repair Kit
Not Available

MERITOR NO.	CASTING NO.	REPLACES	APPLICATION
R4110359	—	Ford F3XY-2140B Bendix 12579 EIS E150480 Wagner F128258 R128258	Mercury

1" Bore

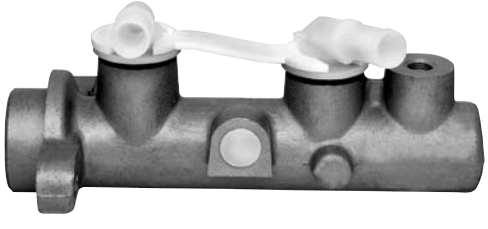

(2) 10 x 1 Outlets

Repair Kit
Not Available

MERITOR NO.	CASTING NO.	REPLACES	APPLICATION
R4110360	—	Ford F3XY-2140A Bendix 12578 EIS E150481 Wagner E128256 Wagner R128256	Mercury

1" Bore

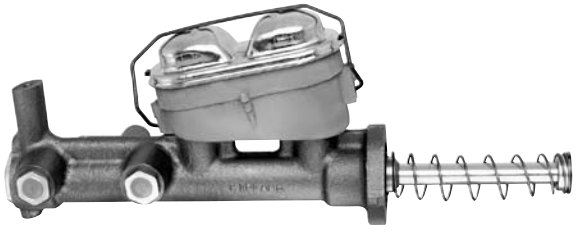

7/16"-24 Outlets

Repair Kit
Not Available

MERITOR NO.	CASTING NO.	REPLACES	APPLICATION
R4110431	300459	EIS E150241 ITE 387957C91 Midland 36436 Wagner F103252	ITE

MASTER CYLINDERS

Listed by Bore Size

1" Bore

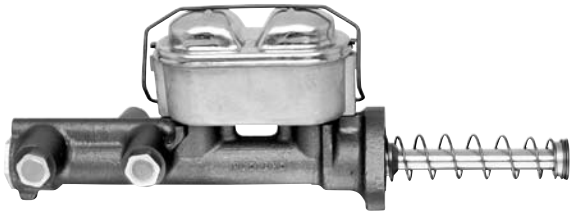

Repair Kit Not Available

MERITOR NO.	CASTING NO.	REPLACES	APPLICATION
R4110432	300406 300459-C	EIS E150234 Ford C9TE-2140J Midland 36437	Ford

1" Bore

1/2"-20
7/16"-24 Outlets

Repair Kit Not Available

MERITOR NO.	CASTING NO.	REPLACES	APPLICATION
R4110436	30014-C	EIS E150235	Ford

1" x 36mm
Approx. 1" x 1 7/16" Bore

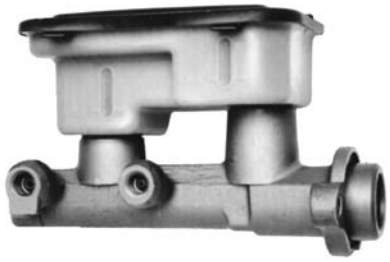

1/2"-20,
9/16" Outlets

Repair Kit Not Available

MERITOR NO.	CASTING NO.	REPLACES	APPLICATION
R4112218	195	Bendix 12218 EIS E150123 GM 18013976 Wagner F116626	Chevrolet

1 1/32" Bore

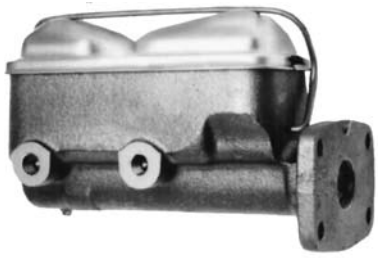

1/2"-20,
9/16"-18 Outlets

Repair Kit Not Available

MERITOR NO.	CASTING NO.	REPLACES	APPLICATION
R4111633	155 3580095	Bendix 11633 Chrysler 3580093 3580242 3699241 EIS E88783 Wagner F88783	Dodge

1 1/16" Bore

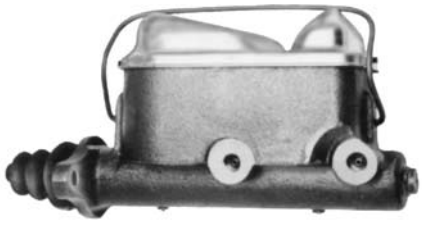

9/16"-18, 1/2"-20 Outlets

Repair Kit Not Available

MERITOR NO.	CASTING NO.	REPLACES	APPLICATION
R4111861	190	Bendix 11861 EIS E102420 Ford E0TZ-2140A Wagner F102420	Ford

1 1/16" Bore

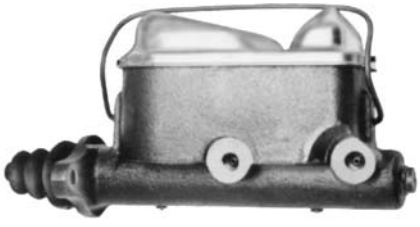

1/2"-20, 9/16"-18 Outlets

Repair Kit Not Available

MERITOR NO.	CASTING NO.	REPLACES	APPLICATION
R4112007	190	Bendix 12007 EIS E105888 Ford E4TZ-2140A Wagner F110917	Ford

MASTER CYLINDERS

Listed by Bore Size

1 1/16" Bore

7/16"-24, 9/16"-18 Outlets

Repair Kit Not Available

MERITOR NO.	CASTING NO.	REPLACES	APPLICATION
R4112198	235	Bendix 12198 EIS E150081 Ford E7TZ-2140C E7UZ-2140C Wagner F120369	Ford

1 1/16" Bore

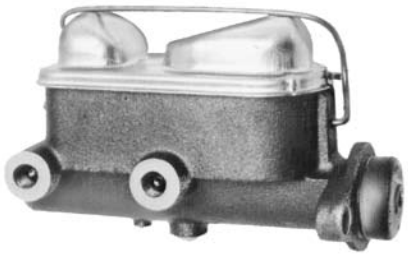

1/2"-20, 9/16"-18 Outlets

Repair Kit Not Available

MERITOR NO.	CASTING NO.	REPLACES	APPLICATION
R4111676	169 2229581	Bendix 11676 EIS E77081 Ford D7TZ-2140B Wagner F97936	Ford

1 1/16" Bore

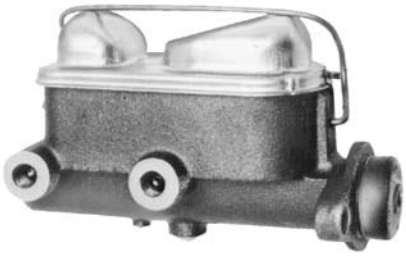

3/8"-24, 7/16"-24 Outlets

Repair Kit Not Available

MERITOR NO.	CASTING NO.	REPLACES	APPLICATION
R4111682	169 2229581	Bendix 11682 EIS E77082 Ford D7TZ-2140A Wagner F97938	Ford

1 1/16" Bore

3/8"-24, 7/16"-24 Outlets

Repair Kit Not Available

MERITOR NO.	CASTING NO.	REPLACES	APPLICATION
R4111856	190	Bendix 11856 EIS E97938 Ford E0TZ-2140B Wagner F102421	Ford

1 1/16" Bore

9/16"-18,
1/2"-20 Outlets

For Rebuild, Use Repair Kit R4122350

MERITOR NO.	CASTING NO.	REPLACES	APPLICATION
R4111902	—	GM 18009373 18010591 18014903 Bendix 11902 EIS E98221 Wagner F1057988	Chevrolet

1 1/16" Bore

3/8"-24
9/16"-18 Outlets

Repair Kit Not Available

MERITOR NO.	CASTING NO.	REPLACES	APPLICATION
R4112833	—	Ford F4TZ-2140G F3TZ-2140A F3TZ-2140B F4TZ-2140A Bendix 12833 Wagner F120368	Ford

MASTER CYLINDERS

Listed by Bore Size

1 1/16" Bore

7/16"-24
3/8"-24 Outlets

Repair Kit
Not Available

MERITOR NO.	CASTING NO.	REPLACES	APPLICATION
R4110368	—	Bendix 12313, 12314 EIS E150317, E150318 Ford F09Z-2140C F09Z-2140D Wagner F122573 F122574	Ford

1 1/16" Bore

9/16"-18,
M 18 x 1.5-6H Outlets

Repair Kit
Not Available

MERITOR NO.	CASTING NO.	REPLACES	APPLICATION
R4110369	—	Ford F58Z-2140A Bendix 13003 Wagner F131214 R131214	Ford

1 1/16" Bore

M 10 x 1.0,
M 12 x 1.0 Outlets

Repair Kit
Not Available

MERITOR NO.	CASTING NO.	REPLACES	APPLICATION
R4110373	—	Ford F57Z-2140B Bendix 13038 EIS E150613 Wagner F131397 R131397	Ford

1 1/16" Bore

M 10 x 1.0,
M 12 x 1.0 Outlets

Repair Kit
Not Available

MERITOR NO.	CASTING NO.	REPLACES	APPLICATION
R4110374	—	Ford F57Z-2140A Bendix 13037 EIS E150612 Wagner F131399 R131399	Ford

1 1/8" Bore

9/16"-18, 1/2"-20 Outlets

Repair Kit
Not Available

MERITOR NO.	CASTING NO.	REPLACES	APPLICATION
R4111732	144 5472003	Wagner F101269	Chevrolet, GMC

1 1/8" Bore

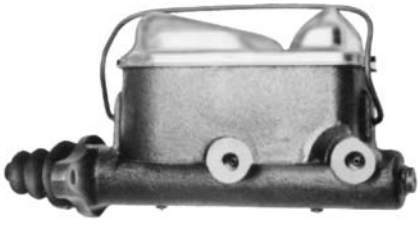

3/8"-24, 7/16"-24 Outlets

Repair Kit
Not Available

MERITOR NO.	CASTING NO.	REPLACES	APPLICATION
R4112008	204	Bendix 12008 EIS E105889 Ford E4TZ-2140B Wagner F110919	Ford

MASTER CYLINDERS

Listed by Bore Size

1 1/8" Bore

9/16"-18,
1/2"-20 Outlets

For Rebuild, Use
Repair Kit R4122705

MERITOR NO.	CASTING NO.	REPLACES	APPLICATION
R4111494	—	Dodge 3491500 4089212 Bendix 11494 EIS E71285 Wagner F73342 F79820 F80568	Dodge

1 1/8" Bore

7/16"-24, 9/16"-18 Outlets

Repair Kit
Not Available

MERITOR NO.	CASTING NO.	REPLACES	APPLICATION
R4112197	235	Bendix 12197 EIS E150077 Ford E7TZ-2140B Wagner F114079	Ford

1 1/8" Bore

1/2"-20,
9/16"-20 Outlets

Repair Kit
Not Available

MERITOR NO.	CASTING NO.	REPLACES	APPLICATION
R4112519	—	Dodge 52004620 Bendix 12519 EIS E150321 Wagner F123524	Dodge

1 1/8" Bore

1/2"-20, 9/16"-18 Outlets

Repair Kit
Not Available

MERITOR NO.	CASTING NO.	REPLACES	APPLICATION
R4111775	30097-C	Chrysler 4112654 EIS E150264 Wagner F98896	Dodge

1 1/8" Bore

9/16"-18
M 18 x 1.5-6H Outlets

Repair Kit
Not Available

MERITOR NO.	CASTING NO.	REPLACES	APPLICATION
R4112200	30087-C	—	—

1 1/8" Bore

M 16 x 1.0-6H,
M 18 x 1.5-6H Outlets

Repair Kit
Not Available

MERITOR NO.	CASTING NO.	REPLACES	APPLICATION
R4112641	—	Ford F24Z-2140B F24Z-2140A Bendix 12641 EIS E150474 Wagner F129285	Ford

MASTER CYLINDERS

Listed by Bore Size

1 1/8" Bore

9/16"-18
M 18 x 1.5-6H Outlets

Repair Kit
Not Available

MERITOR NO.	CASTING NO.	REPLACES	APPLICATION
R4112840	—	Ford F4TZ-2140B Bendix 12840 EIS E150563 Wagner F131306 R131306	Ford

1 1/8" Bore

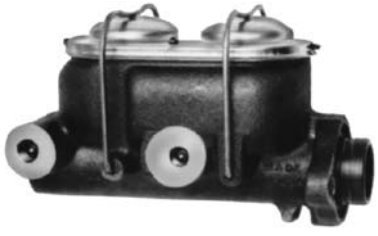

9/16"-18, 1/2"-20 Outlets

Repair Kit
Not Available

MERITOR NO.	CASTING NO.	REPLACES	APPLICATION
R4111732	144 5472003	Wagner F101269	Chevrolet, GMC

1 1/8" Bore

1/2"-20, 9/16"-20 Outlets

For Rebuild, Use
Repair Kit E-8289

MERITOR NO.	CASTING NO.	REPLACES	APPLICATION
R4111860	187 3766185	Bendix 11860 Chrysler 4238199 4294884 4318739 EIS E98894 Wagner F98895	Dodge

1 1/8" Bore

1/2"-20, 9/16"-18 Outlets

Repair Kit
Not Available

MERITOR NO.	CASTING NO.	REPLACES	APPLICATION
R4113055	—	GM 18021273 18029967 Wagner F131468	Chevrolet

1 1/8" Bore

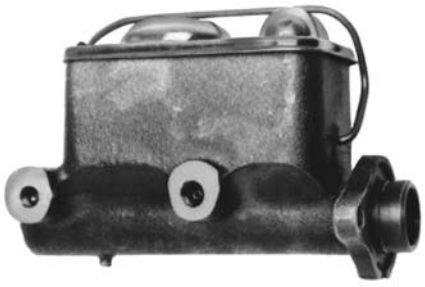

9/16"-18, 1/2"-20 Outlets

See Application
Guide for Repair Kit

MERITOR NO.	CASTING NO.	REPLACES	APPLICATION
R4111944	142 191 5460345 5470409 5470410 FF78951	American Motors 8127766 Bendix 11944 Chrysler J8126953 J8129731 EIS E76162 GM 18008884 Wagner F101254	Chevrolet, GMC, Jeep

1 1/8" Bore

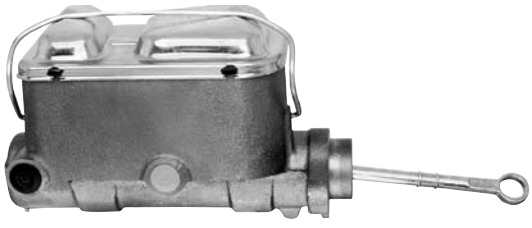

1/2"-20, 9/16"-18 Outlets

Repair Kit
Not Available

MERITOR NO.	CASTING NO.	REPLACES	APPLICATION
R4111758	—	Dodge 3893589 4089222 Bendix 11758 EIS E150263 Wagner F99299 ITE 459226C91	Dodge

MASTER CYLINDERS

Listed by Bore Size

1 1/8" Bore

1/2"-20, 9/16"-18 Outlets

For Rebuild, Use Repair Kit R4122505

MERITOR NO.	CASTING NO.	REPLACES	APPLICATION
R4111732	29881C 5468115 5472003 FF84785	Bendix 11732 EIS E77067 Midland 39009 Wagner F101267	Chevrolet

1 1/8" Bore

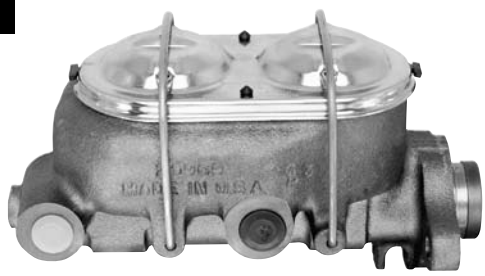

9/16"-18, 1/2"-20 Outlets

For Rebuild, Use Repair Kit R4122643

MERITOR NO.	CASTING NO.	REPLACES	APPLICATION
R4112121	—	GM 18001007 18002264 18009462 Bendix 12121 EIS E77046 Wagner F101268	Chevrolet

1 1/8" Bore

3/16"-18 1/2"-20 Outlets

Repair Kit Not Available

MERITOR NO.	CASTING NO.	REPLACES	APPLICATION
R4111395	121 2223771 2225771 29910-C FF85573	Bendix 11395 EIS E73356 GM 5472732, 5472738 ITE 356039C91 391176C91 Midland 73356 Wagner F73355	ITE

1 1/8" x 40mm

Approx. 1 1/8" x 1 9/16" Bore

1/2"-20, 9/16"-18 Outlets

Repair Kit Not Available

MERITOR NO.	CASTING NO.	REPLACES	APPLICATION
R4112058	194	Bendix 12011 12058 Eagle/Jeep 83502723 EIS E104468 GM 18008065 18008066 18013435 Wagner F104516	Chevrolet, GMC, Jeep

1 1/8" x 40mm

Approx. 1 1/8" x 1 9/16" Bore

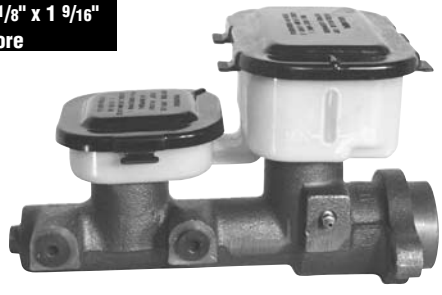

1/2"-20, 9/16"-18 Outlets

Repair Kit Not Available

MERITOR NO.	CASTING NO.	REPLACES	APPLICATION
R4112058	194	Bendix 12058 EIS E150038 GM 18013437 18013440 Wagner F120599	Chevrolet, GMC

MASTER CYLINDERS

Listed by Bore Size

1 1/8" x 40mm
Approx. 1 1/8" x 1 9/16" Bore

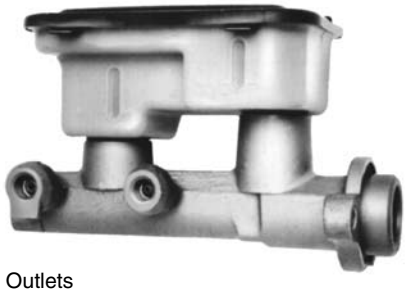

1/2"-20, 9/16"-18 Outlets

MERITOR NO.	CASTING NO.	REPLACES	APPLICATION
R4112219	194	Bendix 12219 EIS E150124 GM 18013977 Wagner F116881	Chevrolet, GMC

1 1/8" x 40mm
Approx. 1 1/8" x 1 9/16" Bore

1/2"-20, 9/16"-18 Outlets

Repair Kit Not Available

MERITOR NO.	CASTING NO.	REPLACES	APPLICATION
R4111865	197 2231396	Bendix 11865 EIS E105118 GM 14036113 14036114 Wagner F104514 F105118	Chevrolet, GMC

1 1/8" x 1 37/64"
Bore

1/2"-20, 9/16"-18 Outlet

For Rebuild, Use Repair Kit R4122202

MERITOR NO.	CASTING NO.	REPLACES	APPLICATION
R4111873	—	Ford E4HZ-2140B	Chevrolet

30mm
Approx. 1 3/16" Bore

9/16"-18, 1/2"-20 Outlets

MERITOR NO.	CASTING NO.	REPLACES	APPLICATION
R4111863	—	Bendix 11863 EIS E104456 GM 1404683 25509416 Wagner F104456	GMC

1 1/8" x 40mm
Approx. 1 1/8" x 1 9/16" Bore

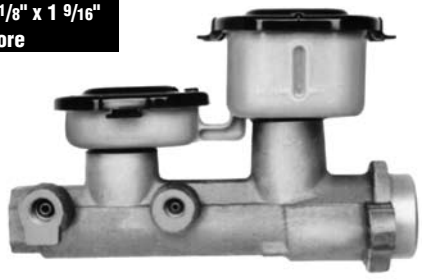

1/2"-20, 9/16"-18 Outlets

Repair Kit Not Available

MERITOR NO.	CASTING NO.	REPLACES	APPLICATION
R4112178	195	Bendix 12178 EIS E150039 GM 18010555 18013438 Wagner F110886	Chevrolet, GMC

28.6mm x 40mm
Approx. 1 1/8" x 1 9/16" Bore

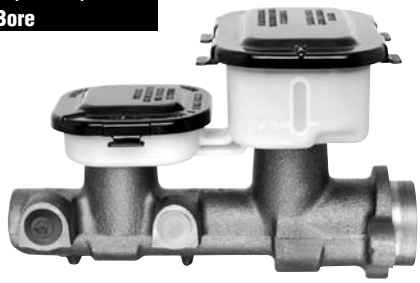

1/2"-20, 9/16"-18 Outlets

Repair Kit Not Available

MERITOR NO.	CASTING NO.	REPLACES	APPLICATION
R4110357	194	Bendix 12493 EIS E150038 GM 18016570 Wagner F1201599	Chevrolet

MASTER CYLINDERS

Listed by Bore Size

1 1/4" Bore

9/16"-18, 1/2"-20 Outlets

MERITOR NO.	CASTING NO.	REPLACES	APPLICATION
R4111730	144 5472003 6472009	Wagner F101266	Chevrolet, GMC

1 1/4" Bore

9/16"-18, 1/2"-20 Outlets

MERITOR NO.	CASTING NO.	REPLACES	APPLICATION
R4111989	193 18007278	Bendix 11989 EIS E104464 GM 18008068 18010748 18014705 Wagner F104464	Chevrolet, GMC

1 1/4" Bore

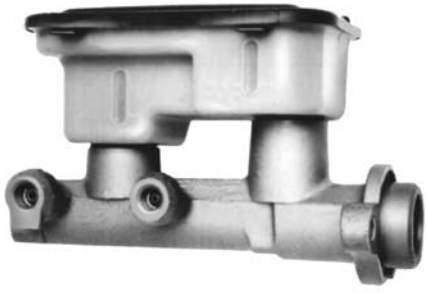

1/2"-20, 9/16"-18 Outlets

Repair Kit Not Available

MERITOR NO.	CASTING NO.	REPLACES	APPLICATION
R4112220	238	Bendix 12220 EIS E150125 Wagner F116627	Chevrolet, GMC

1 1/4" Bore

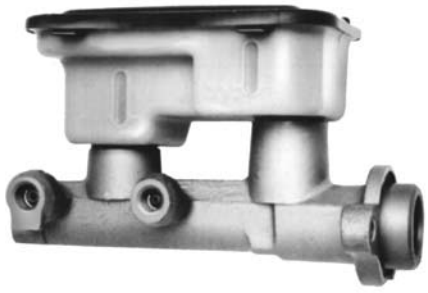

1/2"-20, 9/16"-18 Outlets

Repair Kit Not Available

MERITOR NO.	CASTING NO.	REPLACES	APPLICATION
R4113022	238	EIS E150291 Wagner F120590	Chevrolet, GMC

1 1/4" Bore

1/2"-20 Outlet

For Rebuild, Use Repair Kit R4122964

MERITOR NO.	CASTING NO.	REPLACES	APPLICATION
R4111046	32 4570C 5461282 5461368 616576 FD4570	Bendix 11046 EIS E4572 Ford B9J-2140A Wagner F4572	Ford

1 1/4" Bore

1/2"-20, 9/16"-18 Outlets

Repair Kit Not Available

MERITOR NO.	CASTING NO.	REPLACES	APPLICATION
R4112834	—	Bendix 12834 Dodge 4746402	Dodge

MASTER CYLINDERS

Listed by Bore Size

1 1/4" Bore

1/2"-20, 9/16"-18 Outlets

Repair Kit Not Available

MERITOR NO.	CASTING NO.	REPLACES	APPLICATION
R4113252	—	GM 18021277 18029969	Chevrolet

1 1/4" Bore

9/16"-18, M 18 x 1.5-6H Outlets

Repair Kit Not Available

MERITOR NO.	CASTING NO.	REPLACES	APPLICATION
R4113355	—	Ford F6TZ-2140AA	Ford

1 1/4" Bore

9/16"-18, M 18 x 1.5-6H Outlets

Repair Kit Not Available

MERITOR NO.	CASTING NO.	REPLACES	APPLICATION
R4113249	—	Ford F6TZ-2140BA	Ford

1 1/4" Bore

9/16"-18 M 18 x 1.5-6H Outlets

Repair Kit Not Available

MERITOR NO.	CASTING NO.	REPLACES	APPLICATION
R4113263	—	Ford F6TZ-2140EA	Ford

31.75mm x 40mm
Approx. 1 1/4" x 1 9/16" Bore

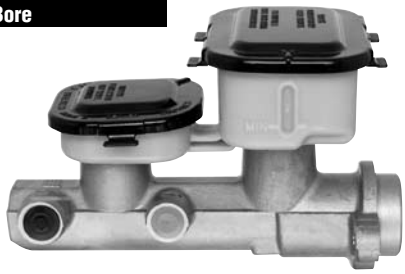

1/2"-20, 9/16"-18 Outlets

Repair Kit Not Available

MERITOR NO.	CASTING NO.	REPLACES	APPLICATION
R4112029	—	GM 18013441 18011713 Bendix 12029 EIS E105925 Wagner F10888 F110888	Chevrolet

MASTER CYLINDERS

Listed by Bore Size

1 1/4" Bore

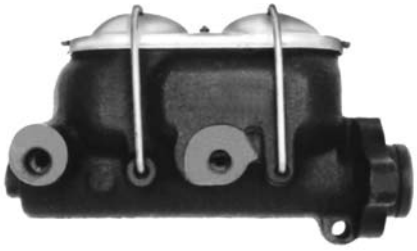

1/2"-20, 9/16"-18 Outlets

Repair Kit Not Available

MERITOR NO.	CASTING NO.	REPLACES	APPLICATION
R4111730	144	Bendix 11730 EIS E105891 GM 18010746 18014707 Wagner F108148	Chevrolet, GMC

1 1/4" Bore

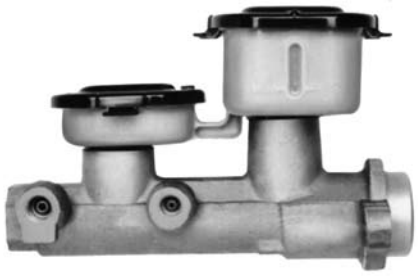

1/2"-20, 9/16"-18 Outlets

Repair Kit Not Available

MERITOR NO.	CASTING NO.	REPLACES	APPLICATION
R418244	238 18012985	EIS E150290 Wagner F120598	Chevrolet, GMC

1 1/4" Bore

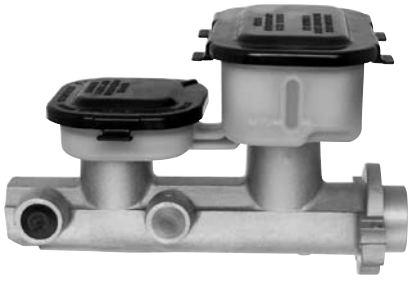

9/16"-18, 1/2"-20 Outlets

Repair Kit Not Available

MERITOR NO.	CASTING NO.	REPLACES	APPLICATION
R4110355	—	GM 18015414 Bendix 12492 Wagner F120598	Chevrolet

1 1/4" Bore

1/2"-20 Outlets

Repair Kit Not Available

MERITOR NO.	CASTING NO.	REPLACES	APPLICATION
R4111454	FE57570 30070	GM 15510611 Bendix 11454 EIS E150259 Wagner F57597 R57597	Chevrolet

1 5/16" Bore

Repair Kit Not Available

MERITOR NO.	CASTING NO.	REPLACES	APPLICATION
R4111583	2229071	Chev/GMC 6259173 Wagner F84058	Chevrolet, Dodge, GMC

1 5/16" Bore

1/2"-20, 9/16"-18 Outlets

For Rebuild, Use Repair Kit R4122597

MERITOR NO.	CASTING NO.	REPLACES	APPLICATION
R4111584	—	GM 14008238 14036115 Bendix 11584 EIS E86510 Wagner F98953	Chevrolet

MASTER CYLINDERS

Listed by Bore Size

1 5/16" Bore

1/2"-20, 9/16"-18 Outlets

Repair Kit Not Available

MERITOR NO.	CASTING NO.	REPLACES	APPLICATION
R4111982	184	Bendix 11982 EIS E105879 GM 14066425 Wagner F108145	Chevrolet, GMC

1 5/16" Bore

1/2"-20, 9/16"-18 Outlets

Repair Kit Not Available

MERITOR NO.	CASTING NO.	REPLACES	APPLICATION
R4113041	—	Dodge 4294548 EIS E150094	Dodge

34mm Approx. 1 21/64" Bore

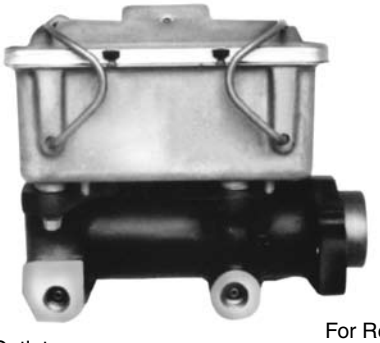

9/16"-18, 1/2"-20 Outlets

For Rebuild, Use Repair Kit R4122437

MERITOR NO.	CASTING NO.	REPLACES	APPLICATION
R4111641	2231137	Bendix 11641 EIS E150064 Wagner F103238	Chevrolet, GMC

34mm Approx. 1 21/64" Bore

9/16"-18, 1/2"-20 Outlets

Repair Kit Not Available

MERITOR NO.	CASTING NO.	REPLACES	APPLICATION
R4111668	265	Bendix 11668 EIS E150063 GM 14004840 14009146 465470 Wagner F103239	Chevrolet, GMC

1 3/8" Bore

Repair Kit Not Available

MERITOR NO.	CASTING NO.	REPLACES	APPLICATION
R4112466	2259705	Ford E6HZ-2140A	Ford

MASTER CYLINDERS

Listed by Bore Size

1 1/2" Bore

1/8"NPT, 1/2"-20 (2) Outlets

For Rebuild, Use Repair Kit R4122937

MERITOR NO.	CASTING NO.	REPLACES	APPLICATION
R4111119	2704 45 616812 618112 S230 FD2704 FF48468	Bendix 11119 EIS E661 ITE 48175-H Wagner F661	ITE

1 1/2" Bore

1/2"-20 (2)Outlets

Repair Kit Not Available

MERITOR NO.	CASTING NO.	REPLACES	APPLICATION
R4111120	—	Bendix 1119 Wagner F661	ITE

1 1/2" Bore

1/2"-20 Outlet

Repair Kit Not Available

MERITOR NO.	CASTING NO.	REPLACES	APPLICATION
R4111129	23123C 23126 61706 618101 65 FE23126 FE23127	Bendix 11129 EIS E22977 Ford B7Q-2140A Wagner F22977	Ford

1 1/2" Bore

For Rebuild, Use Repair Kit R411150

MERITOR NO.	CASTING NO.	REPLACES	APPLICATION
R4111150	FD23477	Bendix 11150 Ford B7Q-2140A TQAS-2140 Wagner F19450	Ford

1 1/2" Bore

1/2"-20 Outlet

Repair Kit Not Available

MERITOR NO.	CASTING NO.	REPLACES	APPLICATION
R4111266	29825-C 41208 617283 617298 97	Bendix 11266 EIS E40022 Ford C3TZ-2140C C3TZ-2140D C3TZ2140L C3TA2155B C9TZ-2140L FE41208 D2TZ-2140B GM 5473012	Ford GM

1 1/2" Bore

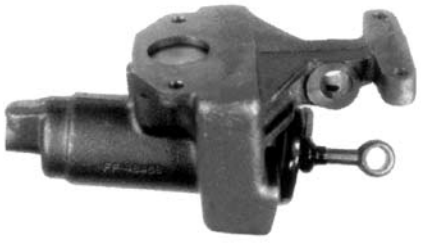

3/4"-18 Outlet

MERITOR NO.	CASTING NO.	REPLACES	APPLICATION
R4111626	FF48468	Wagner F76151	ITE

MASTER CYLINDERS

Listed by Bore Size

1 1/2" Bore

1/2"-20 Outlet

Repair Kit Not Available

MERITOR NO.	CASTING NO.	REPLACES	APPLICATION
R4111632	—	Ford D3TZ-2140G Bendix 11632 EIS E105937 Wagner F77763	Ford

1 1/2" Bore

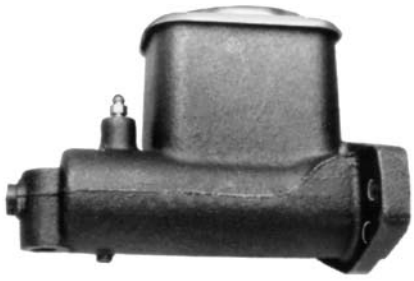

1/2"-20 Outlet

Repair Kit Not Available

MERITOR NO.	CASTING NO.	REPLACES	APPLICATION
R4111773	173 FE57579	Bendix 11773 Wagner F100560	Chevrolet, GMC

1 1/2" Bore

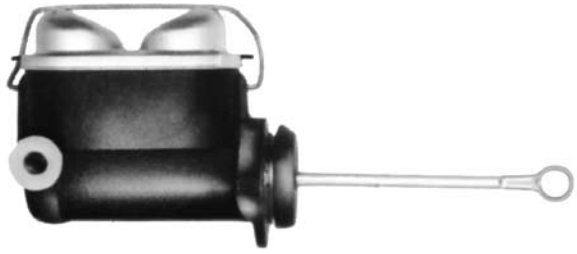

1/2"-20 Outlet

For Rebuild, Use Repair Kit R4122387

MERITOR NO.	CASTING NO.	REPLACES	APPLICATION
R4111911	—	EIS E150267 Ford E0HZ-2140A E2HZ-2140A/C Wagner F103254	Ford

1 3/4" Bore

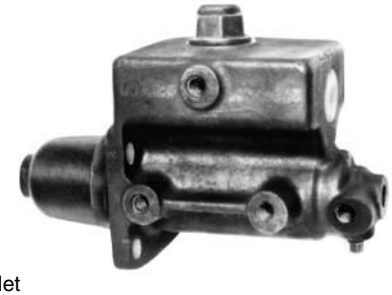

1/2"-20 Outlet

R4122935 Repair Kit

MERITOR NO.	CASTING NO.	REPLACES	APPLICATION
R4111122	39 5450226 616827 618127 777C FE777 FF43812	Bendix 11122 ITE 55070R91 Wagner F2842 WhiteGMC 436742 490390	Diamond Reo Ford ITE Mack WhiteGMC

1 3/4" Bore

1/2" - 20 (3)Outlets

Repair Kit Not Available

MERITOR NO.	CASTING NO.	REPLACES	APPLICATION
R4111123	55 FE1575 30067-C 618182	Bendix 11123 EIS E2951 Ford C8HZ-2140A ITE 425072C91 57156R91 Wagner F2951	Diamond Reo Ford ITE

1 3/4" Bore

1/2"-20 Outlet

Repair Kit Not Available

MERITOR NO.	CASTING NO.	REPLACES	APPLICATION
R4111456	FF57571	Bendix 11456 Wagner F100558	Chevrolet, GMC

MASTER CYLINDERS

Listed by Bore Size

1 3/4" Bore

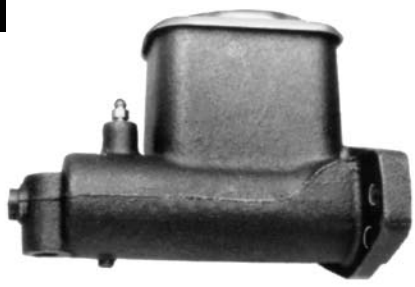

1/2"-20 Outlet

Repair Kit Not Available

MERITOR NO.	CASTING NO.	REPLACES	APPLICATION
R4111451	FD57529 FD57576 FE57577	Bendix 11451 Wagner F100559	Chevrolet, GMC

1 3/4" Bore

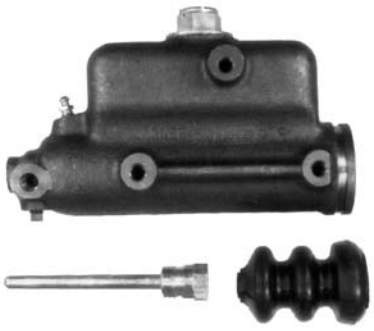

1/2"-20 (3)Outlets

Repair Kit Not Available

MERITOR NO.	CASTING NO.	REPLACES	APPLICATION
R417785	FE1099 FF1099	Wagner F2981	ITE

1 3/4" Bore

1/2"-20 Outlet

MERITOR NO.	CASTING NO.	REPLACES	APPLICATION
R4111151	FD2347	Ford B7QH-2140A Wagner F19451	Ford

1 3/4" Bore

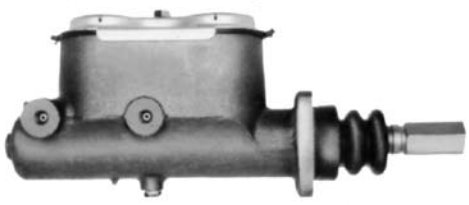

7/16"-24 (2)Outlets

MERITOR NO.	CASTING NO.	REPLACES	APPLICATION
R4111619	FF70533	EIS E150194 ITE 450466C91 Wagner F74891	ITE

1 3/4" Bore

7/16"-24, 1/2"-20 Outlets
Used with 14" Front Brakes

MERITOR NO.	CASTING NO.	REPLACES	APPLICATION
R4111629	FF64506	EIS E150335 Ford D0HZ-2140G D2HZ-2140C Wagner F75994	Used with 14" Brake Ford

1 3/4" Bore

7/16"-24, 1/2"-20 Outlets
Used with 15" Front Brakes

For Rebuild, Use Repair Kit R4122486

MERITOR NO.	CASTING NO.	REPLACES	APPLICATION
R4111631	FF64506	EIS E150269 Ford D2HZ-2140D Wagner F75995	Used with 15" Brake Ford

MASTER CYLINDERS

Listed by Bore Size

1 3/4" Bore

7/16"-24, 1/2"-20 Outlets

Repair Kit Not Available

MERITOR NO.	CASTING NO.	REPLACES	APPLICATION
R4111630	F72283	EIS E150269 Ford D0HZ-2140D/J D2HZ-2140E Wagner F75997	Ford

1 3/4" Bore

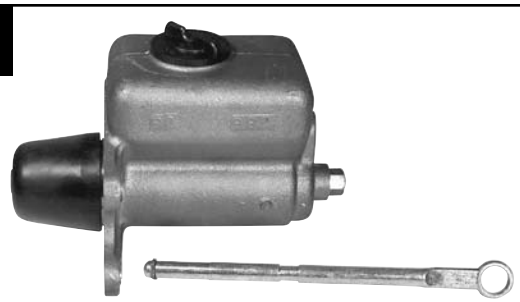

1/2"-20 Outlet
Comes with Push Rod that is locked into Piston.

Repair Kit Not Available

MERITOR NO.	CASTING NO.	REPLACES	APPLICATION
R4111634	FE41207	EIS E150261 Ford D2HZ-2140F Wagner F75996	Ford

1 3/4" Bore

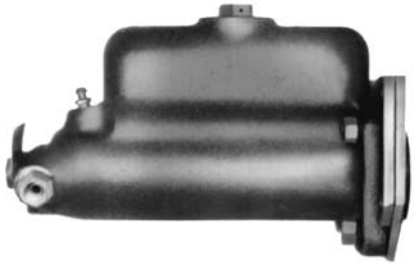

3/8"-24, 3/8"-24 Outlets

For Rebuild, Use Repair Kit R4122488

MERITOR NO.	CASTING NO.	REPLACES	APPLICATION
R4111772	FE1575 FF1575 FF1645	EIS E150270 Ford D2HZ-2140G Wagner F75998	Ford

1 3/4" Bore

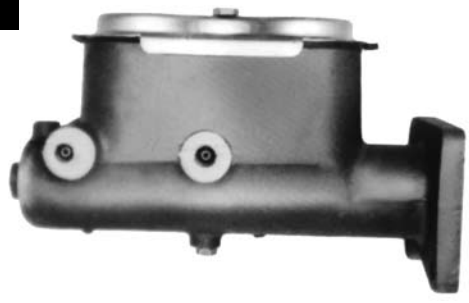

7/16"-20, 1/2"-20 Outlets

Repair Kit Not Available

MERITOR NO.	CASTING NO.	REPLACES	APPLICATION
R4111618	FF67572	EIS E150193 GM 685223 3965376 Wagner F77034	Chevrolet, GMC

1 3/4" Bore

9/16"-18, 1/2"-20 Outlets
No switch port on opposite side.
Tube seats on both ports

For Rebuild, Use Repair Kit R4122386

MERITOR NO.	CASTING NO.	REPLACES	APPLICATION
R4111994	2230600	EIS E150258 GM 15500481 Wagner F116702	Chevrolet, GMC

MASTER CYLINDERS

Listed by Bore Size

1 3/4" Bore

3/4"-18, 11/16"-18 Outlets

For Rebuild, Use Repair Kit R4122386

MERITOR NO.	CASTING NO.	REPLACES	APPLICATION
R4111912	2230600	EIS E150271 Wagner F119396	ITE

1 3/4" Bore

3/4"-20, 11/16"-18 Outlets

For Rebuild, Use Repair Kit R4122386

MERITOR NO.	CASTING NO.	REPLACES	APPLICATION
R4111910	2230600	EIS E150266 Wagner F119397	ITE

1 3/4" Bore

3/4"-18, 11/16"-18 Outlets

For Rebuild, Use Repair Kit R4122386

MERITOR NO.	CASTING NO.	REPLACES	APPLICATION
R4111992	2230600	EIS E150256 Wagner F119398	Ford

1 3/4" Bore

9/16"-18, 1/2"-20 Outlets

For Rebuild, Use Repair Kit R4122386

MERITOR NO.	CASTING NO.	REPLACES	APPLICATION
R4111892	2230600	EIS E150265 Wagner F119399	Chevrolet, GMC

1 3/4" Bore

9/16"-18, 1/2"-20 Outlets
No Tube Seats in Ports.

For Rebuild, Use Repair Kit R4122386

MERITOR NO.	CASTING NO.	REPLACES	APPLICATION
R4111999	2230600	EIS E150439 Wagner F119400	Ford

1 3/4" Bore

3/4"-20, 11/16"-20 Outlets

For Rebuild, Use Repair Kit R4122386

MERITOR NO.	CASTING NO.	REPLACES	APPLICATION
R4111909	2230600	EIS E150257 Ford E2HZ2104B Raybestos MC39462 Wagner F119401	Ford

MASTER CYLINDERS

Listed by Bore Size

1 3/4" Bore

1/2"- 20, 1/2"-20 Outlets

For Rebuild, Use Repair Kit R4122568

MERITOR NO.	CASTING NO.	REPLACES	APPLICATION
R4111624	FF43812	Wagner F76154	ITE

1 3/4" Bore

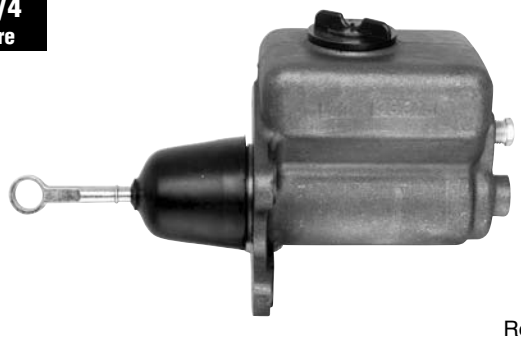

1/2"-20 Outlet

Repair Kit Not Available

MERITOR NO.	CASTING NO.	REPLACES	APPLICATION
R4111622	—	Ford D3TZ-2140H Bendix 11622 EIS E150191 Wagner F77764	Ford

1 3/4" Bore

1/2"-20, 7/16"-24 Outlets

Repair Kit Not Available

MERITOR NO.	CASTING NO.	REPLACES	APPLICATION
R4111635	—	Ford D3TZ-2140K Bendix 11635 EIS E150262 Wagner F78205	Ford

1 3/4", 1 1/8" Bore

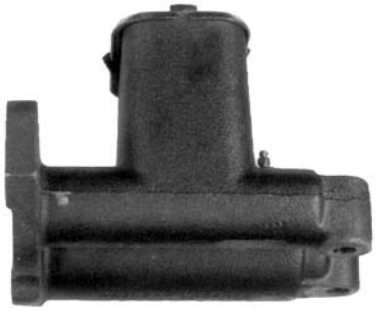

1/2"-20, 1/4"-28 Outlets

Repair Kit Not Available

MERITOR NO.	CASTING NO.	REPLACES	APPLICATION
R4111455	FF54846	EIS 150260 GM 3883081 3896695 Wagner F56789	Chevrolet, GMC

2" Bore

9/16"-18, 1/2"-20 Outlets

For Rebuild, Use Repair Kit R4122346

MERITOR NO.	CASTING NO.	REPLACES	APPLICATION
R4111994	2230605	EIS E150274 Wagner F113751	ITE

2" Bore

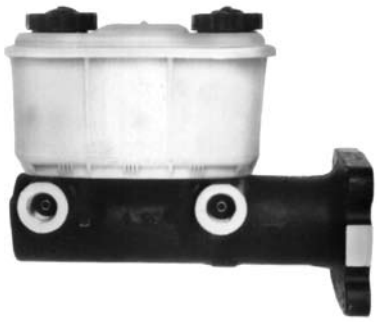

9/16"-18, 1/2"-20 Outlets

For Rebuild, Use Repair Kit R4122346

MERITOR NO.	CASTING NO.	REPLACES	APPLICATION
R4111995	2223505	EIS E150273 Ford E4HZ-2140B Wagner F110980	Ford

MASTER CYLINDERS

Listed by Bore Size

2" Bore

3/4"-18, 11/16"-18 Outlets

For Rebuild, Use Repair Kit R4122346

MERITOR NO.	CASTING NO.	REPLACES	APPLICATION
R4111908	2230605	EIS E150268 Wagner F119395	ITE

2" Bore

MERITOR NO.	CASTING NO.	REPLACES	APPLICATION
R4111994	—	Bendix 11994 ITE 592692C91 Wagner F11375	ITE

2" Bore

9/16"-18, 1/2"-20 Outlets

For Rebuild, Use Repair Kit R4122346

MERITOR NO.	CASTING NO.	REPLACES	APPLICATION
R4113488	—	Bendix 13488	—

2" Bore

3/4"-20, 11/16"-20 Outlets

For Rebuild, Use Repair Kit R4122346

MERITOR NO.	CASTING NO.	REPLACES	APPLICATION
R4111898	2230605	EIS E150394 Wagner F119402	ITE

2" Bore

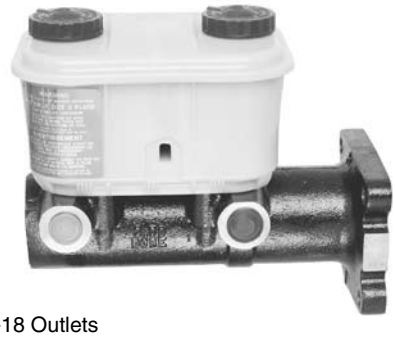

1/2"-20, 9/16"-18 Outlets

MERITOR NO.	CASTING NO.	REPLACES	APPLICATION
R4111995	—	Bendix 11995 EIS E150273 Wagner F110980	—

Bore

For Rebuild, Use Repair Kit R4122568

MERITOR NO.	CASTING NO.	REPLACES	APPLICATION
R4113607	—	Bendix 13607 Wagner R134735	—

MASTER CYLINDERS

Listed by Bore Size

Bore

Repair Kit
Not Available

MERITOR NO.	CASTING NO.	REPLACES	APPLICATION
R4513542	—	Bendix 13542 Raybestos MC390278	Ford

Bore

For Rebuild, Use
Repair Kit R4122568

MERITOR NO.	CASTING NO.	REPLACES	APPLICATION
R4113442	—	Bendix 13442 Raybestos MC390426	—

Bore

Repair Kit
Not Available

MERITOR NO.	CASTING NO.	REPLACES	APPLICATION
R4113543	—	Bendix 13543 Wagner F139959 Raybestos MC390364	—

Bore

Repair Kit
Not Available

MERITOR NO.	CASTING NO.	REPLACES	APPLICATION
R4113648	—	Bendix 13648 Wagner R134792 Raybestos MC390531	—

Bore

Repair Kit
Not Available

MERITOR NO.	CASTING NO.	REPLACES	APPLICATION
R4113649	—	Bendix 13649 Raybestos MC390530 World Truck R134793	—

Bore

For Rebuild, Use
Repair Kit R4122346

MERITOR NO.	CASTING NO.	REPLACES	APPLICATION
R4112426	—	Raybestos MC390590	—

NOTES

DODGE

CLUTCH MASTER CYLINDER

Model	Beginning Year	Ending Year	Year	Clutch Master Cylinder No.	Clutch Slave Cylinder No.	Repair Kit No.	PDC
Dodge D20 0/250/300/350 W20 0/250/300/350 400, 450 Series 500, 600 Series 700 Series 800, 850, 900 Series	1961	1978	1961-1978	**R414035085**			CLUTCH MASTER CYLINDER
Dodge D200 /250/300/350 P30 0/350 W200/2 50/300/350 400, 450 Series 500, 600 Series 700 Series 800, 850, 900 Series	1959	1978	1959-1978	**R414036066**			CLUTCH MASTER CYLINDER

SLAVE CYLINDER

Model	Beginning Year	Ending Year	Year	Clutch Master Cylinder No.	Clutch Slave Cylinder No.	Repair Kit No.	PDC
Dodge D2 00/250/300/350 P2 00/300/350 W 200/250/300/350 400, 450 Series 500, 600 Series 700 Series 800, 850, 900 Series	1959	1978	1959-1978	**R415033723**			CLUTCH SLAVE CYLINDER
Dodge 700 Series 800, 850, 900 Series	1960	1978	1960-1978	**R415036151**			CLUTCH SLAVE CYLINDER
Dodge 700 Series 800, 850, 900 Series	1960	1968	1960-1968	**R415037893**			CLUTCH SLAVE CYLINDER

CLUTCH MASTER AND SLAVE CYLINDER APPLICATION GUIDE

FORD

CLUTCH MASTER CYLINDER

Model	Model	Beginning Year	Ending Year	Year	Clutch Master Cylinder No.	Clutch Slave Cylinder No.	Repair Kit No.	PDC
E250	Ford Truck E250 E350	1984	1989	1984-1989	**R418310**			CLUTCH MASTER CYLINDER
E350	Ford Truck E350	1988	2001	1988-2001	**R418319**			CLUTCH MASTER CYLINDER
E350	Ford Truck 450, 500, 5500 Series E350 F200/250 F300/350	1988	2004	1988-2004	**R418318**			CLUTCH MASTER CYLINDER
E350	Ford Truck E250 E350	1984	1989	1984-1989	**R418310**			CLUTCH MASTER CYLINDER
E350	Ford Truck E350 F200/250 F300/350	1983	1987	1983-1987	**R418304**			CLUTCH MASTER CYLINDER
F200 / 250	Ford Truck F200/250	1999	2001	1999-2001	**R4113508**			CLUTCH MASTER CYLINDER
F200 / 250	Ford Truck F200/250 F300/350	1992	1998	1992-1998	**R4140350032**			CLUTCH MASTER CYLINDER
F200 / 250	Ford Truck 450, 500, 5500 Series F200/250 F300/350	1992	1997	1992-1997	**R4140350033**			CLUTCH MASTER CYLINDER
F200 / 250	Ford Truck 450, 500, 5500 Series F200/250 F300/350	1992	1997	1992-1997	**R4140350100**			CLUTCH MASTER AND SLAVE CYLINDER ASSEMBLY
F200 / 250	Ford Truck 450, 500, 5500 Series E350 F200/250 F300/350	1988	2004	1988-2004	**R418318**			CLUTCH MASTER CYLINDER
F200 / 250	Ford Truck E350 F200/250 F300/350	1983	1987	1983-1987	**R418304**			CLUTCH MASTER CYLINDER
F250 Super Duty	Ford Truck F250 Super Duty F350 Super Duty F450 Super Duty F550 Super Duty	1998	2005	1998-2005	**R4113509**			CLUTCH MASTER CYLINDER
F300 / 350	Ford Truck F200/250 F300/350	1992	1998	1992-1998	**R4140350032**			CLUTCH MASTER CYLINDER
F300 / 350	Ford Truck 450, 500, 5500 Series F200/250 F300/350	1992	1997	1992-1997	**R4140350100**			CLUTCH MASTER AND SLAVE CYLINDER ASSEMBLY
F300 / 350	Ford Truck 450, 500, 5500 Series F200/250 F300/350	1992	1997	1992-1997	**R4140350033**			CLUTCH MASTER CYLINDER

Continued Next Page

CLUTCH MASTER CYLINDER

FORD

Model	Model	Beginning Year	Ending Year	Year	Clutch Master Cylinder No.	Clutch Slave Cylinder No.	Repair Kit No.	PDC
F300 / 350	Ford Truck 450, 500, 5500 Series E350 F200/250 F300/350	1988	2004	1988-2004	**R418318**			CLUTCH MASTER CYLINDER
F300 / 350	Ford Truck E350 F200/250 F300/350	1983	1987	1983-1987	**R418304**			CLUTCH MASTER CYLINDER
F300 / 350	Ford Truck F300/350	1980	1994	1980-1994	**R4140350065**			CLUTCH MASTER CYLINDER
F350 Super Duty	Ford Truck F250 Super Duty F350 Super Duty F450 Super Duty F550 Super Duty	1998	2005	1998-2005	**R4113509**			CLUTCH MASTER CYLINDER
450	Ford Truck 450, 500, 5500 Series F200/250 F300/350	1992	1997	1992-1997	**R4140350100**			CLUTCH MASTER AND SLAVE CYLINDER ASSEMBLY
450	Ford Truck 450, 500, 5500 Series F200/250 F300/350	1992	1997	1992-1997	**R4140350033**			CLUTCH MASTER CYLINDER
450	Ford Truck 450, 500, 5500 Series	1989	2006	1989-2006	**R414039891**			CLUTCH MASTER CYLINDER
450	Ford Truck 450, 500, 5500 Series E350 F200/250 F300/350	1988	2004	1988-2004	**R418318**			CLUTCH MASTER CYLINDER
450	Ford Truck 450, 500, 5500 Series P300/350	1957	1977	1957-1977	**R414024045**			CLUTCH MASTER CYLINDER
F450 Super Duty	Ford Truck F250 Super Duty F350 Super Duty F450 Super Duty F550 Super Duty	1998	2005	1998-2005	**R4113509**			CLUTCH MASTER CYLINDER
500, 5500	Ford Truck 450, 500, 5500 Series F200/250 F300/350	1992	1997	1992-1997	**R4140350100**			CLUTCH MASTER AND SLAVE CYLINDER ASSEMBLY
500, 5500	Ford Truck 450, 500, 5500 Series F200/250 F300/350	1992	1997	1992-1997	**R4140350033**			CLUTCH MASTER CYLINDER
500, 5500	Ford Truck 450, 500, 5500 Series	1989	2006	1989-2006	**R414039891**			CLUTCH MASTER CYLINDER
500, 5500	Ford Truck 450, 500, 5500 Series E350 F200/250 F300/350	1988	2004	1988-2004	**R418318**			CLUTCH MASTER CYLINDER

Continued Next Page

CLUTCH MASTER AND SLAVE CYLINDER APPLICATION GUIDE

FORD

CLUTCH MASTER CYLINDER

Model	Model	Beginning Year	Ending Year	Year	Clutch Master Cylinder No.	Clutch Slave Cylinder No.	Repair Kit No.	PDC
500, 5500	Ford Truck 450, 500, 5500 Series P300/350	1957	1977	1957-1977	**R414024045**			CLUTCH MASTER CYLINDER
F550 Super Duty	Ford Truck F250 Super Duty F350 Super Duty F450 Super Duty F550 Super Duty	1998	2005	1998-2005	**R4113509**			CLUTCH MASTER CYLINDER
600, 6000	Ford Truck 600, 6000 Series 700, 7000 Series 750 Series 800, 850, 8000 Series 900, 1000, 1100, 9000 Series P300/350	1961	1974	1961-1974	**R4111318**			CLUTCH MASTER CYLINDER
700, 7000	Ford Truck 600, 6000 Series 700, 7000 Series 750 Series 800, 850, 8000 Series 900, 1000, 1100, 9000 Series P300/350	1961	1974	1961-1974	**R4111318**			CLUTCH MASTER CYLINDER
750 Series	Ford Truck 600, 6000 Series 700, 7000 Series 750 Series 800, 850, 8000 Series 900, 1000, 1100, 9000 Series P300/350	1961	1974	1961-1974	**R4111318**			CLUTCH MASTER CYLINDER
800, 850, 8000	Ford Truck 600, 6000 Series 700, 7000 Series 750 Series 800, 850, 8000 Series 900, 1000, 1100, 9000 Series P300/350	1961	1974	1961-1974	**R4111318**			CLUTCH MASTER CYLINDER
900, 9000	Ford Truck 900, 1000, 1100, 9000 Series	1978	1998	1978-1998	**R414039737**			CLUTCH MASTER CYLINDER
900, 9000	Ford Truck 600, 6000 Series 700, 7000 Series 750 Series 800, 850, 8000 Series 900, 1000, 1100, 9000 Series P300/350	1961	1974	1961-1974	**R4111318**			CLUTCH MASTER CYLINDER
1000, 1100	Ford Truck 900, 1000, 1100, 9000 Series	1978	1998	1978-1998	**R414039737**			CLUTCH MASTER CYLINDER

CLUTCH MASTER AND SLAVE CYLINDER APPLICATION GUIDE

CLUTCH MASTER CYLINDER

FORD

Model	Model	Beginning Year	Ending Year	Year	Clutch Master Cylinder No.	Clutch Slave Cylinder No.	Repair Kit No.	PDC
1000, 1100	Ford Truck 600, 6000 Series 700, 7000 Series 750 Series 800, 850, 8000 Series 900, 1000, 1100, 9000 Series P300/350	1961	1974	1961-1974	**R4111318**			CLUTCH MASTER CYLINDER
P300/350	Ford Truck 600, 6000 Series 700, 7000 Series 750 Series 800, 850, 8000 Series 900, 1000, 1100, 9000 Series P300/350	1961	1974	1961-1974	**R4111318**			CLUTCH MASTER CYLINDER
P300 / 350	Ford Truck 450, 500, 5500 Series P300/350	1957	1977	1957-1977	**R414024045**			CLUTCH MASTER CYLINDER

SLAVE CYLINDER

Model	Beginning Year	Ending Year	Year	Clutch Master Cylinder No.	Clutch Slave Cylinder No.	Repair Kit No.	PDC
Ford Truck 450, 500, 5500 Series 600, 6000 Series 700, 7000 Series 750 Series 800, 850, 8000 Series 900, 1000, 1100, 9000 Series F200/250 F300/350 P300/350	1957	1982	1957-1982	**R4111206**			CLUTCH SLAVE CYLINDER
Ford Truck 700, 7000 Series 750 Series 800, 850, 8000 Series 900, 1000, 1100, 9000 Series	1957	1983	1957-1983	**R4111208**			CLUTCH SLAVE CYLINDER
Ford Truck 450, 500, 5500 Series F200/250 F300/350	1993	1997	1993-1997	**R4150360015**			CLUTCH SLAVE CYLINDER
Ford Truck F200/250 F300/350	1993	2001	1993-2001	**R4150360016**			CLUTCH SLAVE CYLINDER
Ford Truck F250 Super Duty F350 Super Duty F450 Super Duty F550 Super Duty	1998	2005	1998-2005	**R4113514**			CLUTCH SLAVE CYLINDER
Ford Truck F250 Super Duty F350 Super Duty F450 Super Duty F550 Super Duty	1998	2005	1998-2005	**R4113515**			CLUTCH SLAVE CYLINDER

CLUTCH MASTER AND SLAVE CYLINDER APPLICATION GUIDE

FORD

SLAVE CYLINDER

Model	Beginning Year	Ending Year	Year	Clutch Master Cylinder No.	Clutch Slave Cylinder No.	Repair Kit No.	PDC
Ford Truck 600, 6000 Series 700, 7000 Series 750 Series 800, 850, 8000 Series 900, 1000, 1100, 9000 Series	1958	1998	1958-1998	**R4111768**			CLUTCH SLAVE CYLINDER
Ford Truck 450, 500, 5500 Series P300/350	1965	1974	1965-1974	**R4111320**			CLUTCH SLAVE CYLINDER
Ford Truck E250 E350 F200/250 F300/350	1983	2004	1983-2004	**R4112120**			CLUTCH SLAVE CYLINDER
Ford Truck 450, 500, 5500 Series F200/250 F300/350	1983	2006	1983-2006	**R4112052**			CLUTCH SLAVE CYLINDER
Ford Truck 900, 1000, 1100, 9000 Series	1978	1998	1978-1998	**R415037749**			CLUTCH SLAVE CYLINDER
Ford Truck 700, 7000 Series 800, 850, 8000 Series	1975	1983	1975-1983	**R415037819**			CLUTCH SLAVE CYLINDER
Ford Truck 900, 1000, 1100, 9000 Series	1980	1984	1980-1984	**R415037820**			CLUTCH SLAVE CYLINDER
Ford Truck 600, 6000 Series 700, 7000 Series 800, 850, 8000 Series	1979	1998	1979-1998	**R4111916**			CLUTCH SLAVE CYLINDER
Ford Truck 600, 6000 Series 700, 7000 Series 800, 850, 8000 Series	1979	1998	1979-1998	**R4111915**			CLUTCH SLAVE CYLINDER
Ford Truck 700, 7000 Series 800, 850, 8000 Series	1982	1998	1982-1998	**R415037825**			CLUTCH SLAVE CYLINDER
Ford Truck E250 E350 F200/250 F300/350	1988	1992	1988-1992	**R415037897**			CLUTCH SLAVE CYLINDER
Ford Truck 600, 6000 Series 700, 7000 Series 800, 850, 8000 Series	1980	1989	1980-1989	**R415037899**			CLUTCH SLAVE CYLINDER
Ford Truck 700, 7000 Series FRR, FSR, FTR, FVR, FXR	1988	1998	1988-1998	**R415037930**			CLUTCH SLAVE CYLINDER

CLUTCH MASTER CYLINDER

GM

Model	Beginning Year	Ending Year	Year	Clutch Master Cylinder No.	Clutch Slave Cylinder No.	Repair Kit No.	PDC
GM C20/25/35 K20/25/30/35 Envoy	1992	2001	1992-2001	**R4113118**			CLUTCH MASTER CYLINDER
GM P30/35	1992	1995	1992-1995	**R4140350069**			CLUTCH MASTER CYLINDER
GM C20/25/30/35 K20/25/30/35	1996	2000	1996-2000	**R4113315**			CLUTCH MASTER CYLINDER
GM P30	1996	1996	1996	**R4140350102**			CLUTCH MASTER CYLINDER
GM K30/35 Sierra 3/4 Ton Silverado 3/4 Ton	1999	2000	1999-2000	**R4140350124**			CLUTCH MASTER CYLINDER
GM Sierra 3/4 & 1 Ton Silverado 3/4 & 1 Ton	2001	2002	2001-2002	**R4113511**			CLUTCH MASTER CYLINDER
GM C20/25/30/35 K20/25/30/35	1992	1995	1992-1995	**R4140350182**			CLUTCH MASTER CYLINDER
GM C20/25/30/35 K20/25/30/35 R20/25/30/35 V20/25/30/35	1985	1991	1985-1991	**R4112176**			CLUTCH MASTER CYLINDER
GM C20/25/30/35 K20/25 V20/25	1988	1991	1988-1991	**R418312**			CLUTCH MASTER CYLINDER
GM 50, 500, 5000 Series 60 Series 70 Series FRR, FSR, FTR, FVR, FXR	1987	2001	1987-2001	**R414039815**			CLUTCH MASTER CYLINDER
GM 60 Series FRR, FSR, FTR, FVR, FXR	1990	1996	1990-1996	**R419822**			CLUTCH MASTER CYLINDER
GM 400, 4000, 4500 Series 50, 500, 5000, 5500 Series 60, 600, 6000 Series 70, 700, 7000 Series 80, 800, 8000 Series Others 1 Ton	1960	1966	1960-1966	**R413019089**			BRAKE AND CLUTCH MASTER CYLINDER
GM C20/25/3035 K15/20/25 100, 1000 Series 40, 400, 4000, 4500 Series 50, 500, 5000 Series 60, 600, 6000, 6500 Series Others 3/4 & 1 Ton	1960	1966	1960-1966	**R413034404**			BRAKE AND CLUTCH MASTER CYLINDER

CLUTCH MASTER AND SLAVE CYLINDER APPLICATION GUIDE

GM

CLUTCH MASTER CYLINDER

Model	Beginning Year	Ending Year	Year	Clutch Master Cylinder No.	Clutch Slave Cylinder No.	Repair Kit No.	PDC
GM 40, 400, 4000, 4500 Series 50, 500, 5000 Series 60, 600, 6000, 6500 Series 70, 700, 7000, 7500 Series 80, 800, 8000 Series Others 1 Ton	1961	1973	1961-1973	**R413036212**			BRAKE AND CLUTCH MASTER CYLINDER
GM 400, 4000, 4500 Series 50, 500, 5000, 5500 Series 60, 600, 6000, 6500 Series 65 Series 70, 700, 7000 Series	1966	1980	1966-1980	**R413036347**			BRAKE AND CLUTCH MASTER CYLINDER
GM 60, 600, 6000, 6500 Series 65 Series 70, 700, 7000, 7500 Series	1966	1980	1966-1980	**R4111455**			BRAKE AND CLUTCH MASTER CYLINDER

GM

SLAVE CYLINDER

Model	Beginning Year	Ending Year	Year	Clutch Master Cylinder No.	Clutch Slave Cylinder No.	Repair Kit No.	PDC
GM C20/25/30/35 K20/25 100, 1000 Series 40, 400, 4000 Series 50, 500, 5000 Series 60, 600, 6000 Series 70, 700, 7000 Series 80, 800, 8000 Series Others 3/4 & 1 Ton	1960	1965	1960-1965	**R415019097**			CLUTCH SLAVE CYLINDER
GM C20/25/30/35 K20/25/30/35 P30/35	1992	1995	1992-1995	**R4113347**			CLUTCH SLAVE CYLINDER
GM P30/35	1989	1991	1989-1991	**R4150360053**			CLUTCH SLAVE CYLINDER
GM C20/25/30/35 K20/25/30/35 P30/35 Silverado 1/2 & 3/4 Ton	1996	2000	1996-2000	**R4113207**			CLUTCH SLAVE CYLINDER
GM C20 K20 Sierra 3/4 & 1 Ton Silverado 3/4 & 1 Ton	2001	2005	2001-2005	**R4150360101**			CLUTCH SLAVE CYLINDER
GM Sierra 3/4 & 1 Ton Silverado 3/4 & 1 Ton	2001	2002	2001-2002	**R4113513**			CLUTCH SLAVE CYLINDER

SLAVE CYLINDER

GM

Model	Beginning Year	Ending Year	Year	Clutch Master Cylinder No.	Clutch Slave Cylinder No.	Repair Kit No.	PDC
GM C20/25/30/35 K20/25 40, 400, 4000, 4500 Series 50, 500, 5000, 5500 Series 60, 600, 6000, 6500 Series 65 Series 70, 700, 7000 Series Others 3/4 & 1 Ton	1960	1980	1960-1980	**R415036124**			CLUTCH SLAVE CYLINDER
GM 700, 7000, 7500 Series 1500, 1600 Series 3000 Series 4000 Series 9000 Series	1959	1966	1959-1966	**R415036158**			CLUTCH SLAVE CYLINDER
GM 40, 400, 4000, 4500 Series 50, 500, 5000, 5500 Series 60, 600, 6000, 6500 Series 70, 700, 7000, 7500 Series 80, 800, 8000 Series	1961	1980	1961-1980	**R415037237**			CLUTCH SLAVE CYLINDER
GM C20/25/30/35 K20/25/30/35 R20/25/30/35 V20/25/30/35	1985	1991	1985-1991	**R4112168**			CLUTCH SLAVE CYLINDER
GM C20/25/30/35 K20/25/30/35 V20/25	1988	1991	1988-1991	**R418339**			CLUTCH SLAVE CYLINDER
GM 50 Series 60 Series 70 Series FRR, FSR, FTR, FVR, FXR	1987	2001	1987-2001	**R415037931**			CLUTCH SLAVE CYLINDER
GM 500, 5000, 5500 Series	1988	1989	1988-1989	**R419821**			CLUTCH SLAVE CYLINDER

CLUTCH MASTER AND SLAVE CYLINDER APPLICATION GUIDE

GM

BRAKE MASTER CYLINDER

Model	Beginning Year	Ending Year	Year	Clutch Master Cylinder No.	Clutch Slave Cylinder No.	Repair Kit No.	PDC
GM C20/25/30/35 K20/25 40, 400, 4000 Series 50, 500, 5000 Series 60, 600, 6000, 6500 Series 100, 1000 Series Others 3/4 & 1 Ton	1960	1966	1960-1966	**R413034403**			BRAKE MASTER CYLINDER
GM 600, 6000, 6500 Series	1967	1969	1967-1969	**R413036121**			BRAKE MASTER CYLINDER
GM 40, 400, 4000, 4500 Series 50, 500, 5000 Series 60, 600, 6000, 6500 Series 700, 7000, 7500 Series	1967	1973	1967-1973	**R4110428**			BRAKE MASTER CYLINDER

ISUZU

CLUTCH MASTER CYLINDER

Model	Beginning Year	Ending Year	Year	Clutch Master Cylinder No.	Clutch Slave Cylinder No.	Repair Kit No.	PDC
Isuzu Hombre	1998	2000	1998-2000	**R4113118**			CLUTCH MASTER CYLINDER
Isuzu NPR Series NRR Series W5 Series W6 Series W7H W7M	1987	2001	1987-2001	**R414039815**			CLUTCH MASTER CYLINDER
Isuzu NPR Series W4 Series	1986	1998	1986-1998	**R419822**			CLUTCH MASTER CYLINDER

SLAVE MASTER CYLINDER

Model	Beginning Year	Ending Year	Year	Clutch Master Cylinder No.	Clutch Slave Cylinder No.	Repair Kit No.	PDC
Isuzu EVR	1988	1990	1988-1990	**R415037930**			CLUTCH SLAVE CYLINDER
Isuzu Hombre	1996	2000	1996-2000	**R4113207**			CLUTCH SLAVE CYLINDER
Isuzu NRR Series W5 Series W6 Series W7H W7M	1987	2001	1987-2001	**R415037931**			CLUTCH SLAVE CYLINDER
Isuzu NPR Series W4 Series	1986	1998	1986-1998	**R419821**			CLUTCH SLAVE CYLINDER

CLUTCH MASTER AND SLAVE CYLINDER APPLICATION GUIDE

CLUTCH MASTER CYLINDER

ITE

Model	Beginning Year	Ending Year	Year	Clutch Master Cylinder No.	Clutch Slave Cylinder No.	Repair Kit No.	PDC
ITE 180, 1800 Series 190, 1900 Series	1958	1966	1958-1966	**R414036148**			CLUTCH MASTER CYLINDER
ITE 100, 1000 Series 110, 1100 Series 160, 1600 Series 170, 1700 Series 180, 1800 Series 185, 1850 Series 200, 2000, 3000 Series	1956	1983	1956-1983	**R4111467**			CLUTCH MASTER CYLINDER
ITE 160, 1600 Series 170, 1700 Series 180, 1800 Series 185, 1850 Series 190, 1900 Series	1964	1984	1964-1984	**R4111468**			CLUTCH MASTER CYLINDER
ITE 110, 1100 Series 120, 1200 Series 130, 1300 Series 140, 1400 Series 150, 1500 Series 160, 1600 Series 170, 1700 Series 180, 1800 Series 185, 1850 Series Diamond T Truck Divco Truck Metro Series	1950	1968	1950-1968	**R41303573**			BRAKE AND CLUTCH MASTER CYLINDER
ITE 120, 1200 Series 130, 1300 Series 150, 1500 Series	1958	1970	1958-1970	**R413036154**			BRAKE AND CLUTCH MASTER CYLINDER
ITE 100, 1000 Series 110, 1100 Series 900 Series	1961	1968	1961-1968	**R413036155**			BRAKE AND CLUTCH MASTER CYLINDER

SLAVE MASTER CYLINDER

ITE

Model	Beginning Year	Ending Year	Year	Clutch Master Cylinder No.	Clutch Slave Cylinder No.	Repair Kit No.	PDC
ITE 140, 1400 Series 160, 1600 Series 170, 1700 Series 180, 1800 Series 185, 1850 Series 190, 1900 Series 200, 2000, 3000 Series Metro Series	1956	1984	1956-1984	**R4111466**			CLUTCH SLAVE CYLINDER

CLUTCH MASTER AND SLAVE CYLINDER APPLICATION GUIDE

ITE

SLAVE MASTER CYLINDER

Model	Beginning Year	Ending Year	Year	Clutch Master Cylinder No.	Clutch Slave Cylinder No.	Repair Kit No.	PDC
ITE 100, 1000 Series 110, 1100 Series 120, 1200 Series 130, 1300 Series 150, 1500 Series 900 Series Metro Series	1958	1970	1958-1970	**R415019097**			CLUTCH SLAVE CYLINDER
ITE 140, 1400 Series 160, 1600 Series 170, 1700 Series 180, 1800 Series 185, 1850 Series 190, 1900 Series 200, 2000, 3000 Series Metro Series	1956	1984	1956-1984	**R4111466**			CLUTCH SLAVE CYLINDER

ITE

BRAKE MASTER CYLINDER

Model	Beginning Year	Ending Year	Year	Clutch Master Cylinder No.	Clutch Slave Cylinder No.	Repair Kit No.	PDC
ITE Scout Scout II	1961	1966	1961-1966	**R413036121**			BRAKE MASTER CYLINDER

CLUTCH MASTER CYLINDERS

Listed by Bore Size

11/16" Bore

M12 x 1 Outlet Size

For Rebuild, Use Repair Kit R4122205

MERITOR NO.	CASTING NO.	REPLACES	APPLICATION
R4112169	D276C	Bendix 12169 EIS E105934 GM 15594142 Wagner F110117	Chevrolet 1984-86 S, T10, Blazer & Pickup GMC 1984-86 S, T15, Jimmy & Pickup

11/16" Bore

M12 x 1 Outlet Size

For Rebuild, Use Repair Kit R4122204

MERITOR NO.	CASTING NO.	REPLACES	APPLICATION
R418312	—	EIS E150294 Wagner F119584	Chevrolet 1988-90 C1500, K2500 & K3500 1988-91 K1500 GMC 1988-90 C1500, K2500, C3500 & K3500

11/16" Bore

M12 x 1 Outlet Size

For Rebuild, Use Repair Kit R4122204

MERITOR NO.	CASTING NO.	REPLACES	APPLICATION
R4112348	—	EIS E150294 Wagner F119584	Chevrolet 1988-90 C1500, K2500 & K3500 1988-91 K1500 GMC 1988-90 C1500, K2500, C3500 & K3500

11/16" Bore

M12 x 1 Outlet Size

For Rebuild, Use Repair Kit R4122204

MERITOR NO.	CASTING NO.	REPLACES	APPLICATION
R4112176	268C	Bendix 12176 EIS E150025 GM 15537761 Wagner F110273	Chevrolet 1985-91 Blazer 1985-86 C10, C20 & C30 1984-86 K10, K20 & K30 1987-91 R, V10, 20 & 30 GMC 1985-91 Jimmy 1985-86 K15, 25 & 35 1985-86 K15, 25 & 35 1987-91 R, V15, 25 & 35

11/16" Bore

M12 x 1 Outlet Size

For Rebuild, Use Repair Kit R4122205

MERITOR NO.	CASTING NO.	REPLACES	APPLICATION
R418317	—	EIS E105934 GM 15576194 Wagner F116398	Chevrolet 1987-91 S, T Blazer, S10 Pickup GMC 1987-91 S, T Jimmy, S15 Pickup

3/4" Bore

Non-Rebuildable

MERITOR NO.	CASTING NO.	REPLACES	APPLICATION
R4112119	D-20147	Bendix 12119 EIS E150029 Ford E3TZ-7A543 E3TZ-7A543B E59Z-7A543 E69Z-7A543A Wagner F110270	Ford 1986-87 Aerostar 1984-87 Bronco II 1983-87 Ranger

CLUTCH MASTER CYLINDERS

Listed by Bore Size

3/4" Bore

M12 x 1 Outlet Size

For Rebuild, Use Repair Kit R418326

MERITOR NO.	CASTING NO.	REPLACES	APPLICATION
R418311	—	EIS E150030 GM 15537769 Wagner F119585	Chevrolet 1985-89 Astro Van GMC 1985-89 Safari Van

3/4" Bore

Non-Rebuildable

MERITOR NO.	CASTING NO.	REPLACES	APPLICATION
R418313	D22994	EIS E150286 Wagner F117051	Ford 1988-91 Aerostar & Ranger 1988-90 Bronco II 1991 Explorer

7/8" Bore

Non-Rebuildable

MERITOR NO.	CASTING NO.	REPLACES	APPLICATION
R4112117	D29731	Bendix 12117 EIS E150050 Ford E3TZ-7A543A Wagner F110710	Ford 1984-89 Bronco & F150 1982-87 F250 & F350

7/8" Bore

Non-Rebuildable

MERITOR NO.	CASTING NO.	REPLACES	APPLICATION
R4112118	D2-627 Or D20627	Bendix 12118 EIS E150028 Ford E4UZ-7A543A Wagner F110269	Ford 1984-87 E150 & E350 1984-88 E250

7/8" Bore

Non-Rebuildable

MERITOR NO.	CASTING NO.	REPLACES	APPLICATION
R418316	D2-627	EIS E150284 Wagner F117054	Ford 1988-89 E100, E150 1989-90 E2-0, E250 1989-91 E350

7/8" Bore

Non-Rebuildable

MERITOR NO.	CASTING NO.	REPLACES	APPLICATION
R4112561	D22375	EIS E150283 Wagner F117053	Ford 1988-91 F150, F250, F350, Bronco & Super Duty 1986 F150 1990-91 E350

CLUTCH MASTER CYLINDERS

Listed by Bore Size

7/8" Bore

Non-Rebuildable

MERITOR NO.	CASTING NO.	REPLACES	APPLICATION
R4112985	—	EIS E150285 Wagner F118415	Ford 1988-90 E300 & E350

1" Bore

7/16"-24 Outlet Size

For Rebuild, Use Repair Kit R4122770

MERITOR NO.	CASTING NO.	REPLACES	APPLICATION
R4111467	84 29838C FE49360 FE49370	EIS E39969 ITE 878977R92 Wagner F54699	ITE

1 1/16" Bore

7/16"-24 Outlet Size

For Rebuild, Use Repair Kit R4122882

MERITOR NO.	CASTING NO.	REPLACES	APPLICATION
R4111161	89 FE23482	EIS E33466 Ford C1TT-7A543G Wagner F36764	Ford

1 1/16" Bore

7/16"-24 Outlet Size

For Rebuild, Use Repair Kit E-7834

MERITOR NO.	CASTING NO.	REPLACES	APPLICATION
R417830	FF89193	EIS E105880 Ford E0HZ-7A543A D8HZ-7A543A Wagner F101210	Ford

1 1/8" Bore

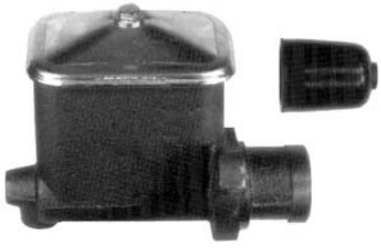

7/16"-24 Outlet Size

Repair Kit Not Available

MERITOR NO.	CASTING NO.	REPLACES	APPLICATION
R4111191	29789C 3769225 616634 75	EIS E34173 GM 18008626 5467736 Wagner F34173	Chevrolet GMC

1 1/8" Bore

1/8" NPT

Repair Kit Not Available

MERITOR NO.	CASTING NO.	REPLACES	APPLICATION
R4111318	29780C 618637 77	EIS E37072 Ford C1TT-7A542A Wagner F35417	Ford

CLUTCH MASTER CYLINDERS

Listed by Bore Size

1 1/8" Bore

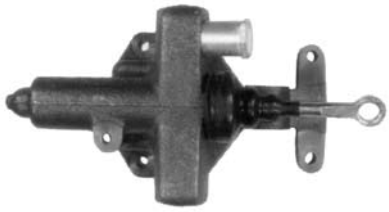

3/4"-18 Outlet Size

For Rebuild, Use Repair Kit R4122908

MERITOR NO.	CASTING NO.	REPLACES	APPLICATION
R4111468	110 83230 FF42-89	EIS E44466 ITE 897757R91 Wagner F42-82	ITE

CLUTCH SLAVE CYLINDERS

Listed by Bore Size

13/16" Bore

M12 x 1 Inlet

For Rebuild, Use Repair Kit R4122210

MERITOR NO.	CASTING NO.	REPLACES	APPLICATION
R4112168	2M6C	Bendix 12168 EIS EW155048 GM 15537762 Wagner F103483	Chevrolet 1985-91 Blazer 1985-86 C, K10, 20, 30 1987-91 R, V10, 20, 30 GMC 1985-91 Jimmy 1985-86 C, K15, 25, 35 1987-91 R, V15, 25, 35

29/32" Bore

7/16"-24 Inlet

Repair Kit Not Available

MERITOR NO.	CASTING NO.	REPLACES	APPLICATION
R4111208	618774 642	EIS EW33722 Wagner F124112	Ford 1957-83 700 thru 950
R4122893	FD25669	Ford 89TZ7A508A Wagner F33722	—

1" Bore

Non-Rebuildable

MERITOR NO.	CASTING NO.	REPLACES	APPLICATION
R4112120	809	Bendix 1212 EIS EW155062 Ford E4TZ-7A564A E4TZ-7A564D Wagner F103485	Ford 1984-91 Bronco F150, F250, F350

13/16" Bore

M12 x 1 Inlet

For Rebuild, Use Repair Kit R4122160

MERITOR NO.	CASTING NO.	REPLACES	APPLICATION
R4112457	—	GM 15585415 Wagner F103762	Chevrolet 1988-91 C, K1500, 2500 & 3500 GMC 1988-91 C, K1500, 2500 & 3500

1" Bore

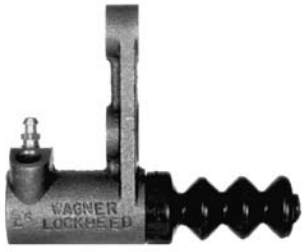

For Rebuild, Use Repair Kit R4122915

MERITOR NO.	CASTING NO.	REPLACES	APPLICATION
R4111206	FD48909 FD24288 61484 641	Chrysler J924794 EIS EW33721 Ford C5TZ-7A508D Wagner F124111	Ford 1957-76 P350, 400 1957-65 100 Series 1957-60 2-0 Series 1957-83 550 thru 950 Jeep 1962-64 Truck

1" Bore

Non-Rebuildable

MERITOR NO.	CASTING NO.	REPLACES	APPLICATION
R4112055	DB07ML009A	Bendix 12055 EIS EW155062 Ford E3TZ-7A564D E7SZ-7A508A Wagner F103473	Ford 1984 Bronco II 1983-84 Ranger

CLUTCH SLAVE CYLINDERS

Listed by Bore Size

1" Bore

7/16"-24 Inlet

For Rebuild, Use Repair Kit R4122342

MERITOR NO.	CASTING NO.	REPLACES	APPLICATION
R4111768	26117C 29481C 41237 618684 689 FD36117	Ford D9HZ-7A508D Wagner F100325	Ford 1979-88 C, CT800

1" Bore

7/16"-24 Inlet

For Rebuild, Use Repair Kit R4122697

MERITOR NO.	CASTING NO.	REPLACES	APPLICATION
R4111466	29358C 41237C 656 FD41237 FE41237	EIS EW39973 ITE 965563R91 Wagner F43260	ITE 1961-88 1500 - 1900

1" Bore

7/16"-24 Inlet

For Rebuild, Use Repair Kit R4122342

MERITOR NO.	CASTING NO.	REPLACES	APPLICATION
R4111915	FD98665	EIS EW155183 Ford D9HZ-7A508B Wagner F98664	Ford 1975-88 600, 700, 800

1" Bore

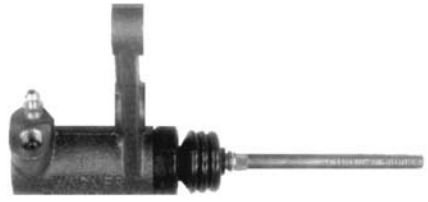

7/16"-24 Inlet

For Rebuild, Use Repair Kit R4122342

MERITOR NO.	CASTING NO.	REPLACES	APPLICATION
R4111916	FD98665	EIS EW155170 Ford D9HZ-7A508A Wagner F98663	Ford 1975-88 600, 700, 800

1 " Bore

7/16"-24 Inlet

Repair Kit Not Available

MERITOR NO.	CASTING NO.	REPLACES	APPLICATION
R4111320	689 FD36117	EIS EW44469 Ford C5TZ-7A508B Wagner F124110	Chevrolet 1960-66 10, 2-, 30 1966-80 40 thru 80 Series GMC 1960-66 1000, 1500, 2500 & 3500 1960-80 4000, 5500, 6000 & 6500

1 1/4" Bore

Unthreaded Inlet

Non-Rebuildable

MERITOR NO.	CASTING NO.	REPLACES	APPLICATION
R4112052	D22231	Bendix 12-52 EIS EW155060 Ford D3TZ-7A564A E3TZ-7A564A Wagner F103476	Ford 1982-91 F250, F350 1988-91 F450 Super Duty

CLUTCH SLAVE CYLINDERS

Listed by Bore Size

Bore

MERITOR NO.	CASTING NO.	REPLACES	APPLICATION
R4113511	—	Bendix 13511 Wagner CM350172	—

Bore

MERITOR NO.	CASTING NO.	REPLACES	APPLICATION
R4113315	—	Bendix 13315 Wagner CM350038	—

Bore

Repair Kit Not Available

MERITOR NO.	CASTING NO.	REPLACES	APPLICATION
R4113318	—	Bendix 13318 Wagner CM350080	—

Bore

Repair Kit Not Available

MERITOR NO.	CASTING NO.	REPLACES	APPLICATION
R4113207	—	Bendix 13207 Wagner CM36058	—

Bore

Repair Kit Not Available

MERITOR NO.	CASTING NO.	REPLACES	APPLICATION
R4113118	—	Bendix 13118 Wagner CM250042	Ford

Bore

MERITOR NO.	CASTING NO.	REPLACES	APPLICATION
R4113347	—	Bendix 13347 Wagner CM36027	—

CLUTCH SLAVE CYLINDERS

Listed by Bore Size

Bore

MERITOR NO.	CASTING NO.	REPLACES	APPLICATION
R4113505	—	Bendix 13505 Wagner CM360071	—

Bore

MERITOR NO.	CASTING NO.	REPLACES	APPLICATION
R4113515	—	—	—

Bore

Repair Kit Not Available

MERITOR NO.	CASTING NO.	REPLACES	APPLICATION
R4113509	FF54846	Bendix 13509 Wagner CM350135	Chevrolet, GMC

Bore

MERITOR NO.	CASTING NO.	REPLACES	APPLICATION
R4113514	—	—	—

Bore

Repair Kit Not Available

MERITOR NO.	CASTING NO.	REPLACES	APPLICATION
R4113508	—	Bendix 13508 Wagner CM350080	Ford

HYDRAULIC BRAKE HOSE PROGRESSIVE SIZE LISTING

Sorted By Overall Length

OVERALL LENGTH	MERITOR PART NO.	APPLICATION	POSITION	PAGE NO.
8.00	**R4510462**	—	—	6-190
9.25	**R4578136**	Dodge	F	6-234
9.38	**R4510521**	—	—	6-195
9.50	**R4578557**	—	—	6-243
9.72	**R4578188**	—	—	6-236
9.75	**R4577024**	Dodge	F	6-211
10.19	**R4510498**	—	—	6-192
10.25	**R4510573**	—	—	6-199
10.25	**R4510586**	—	—	6-200
10.25	**R4511245**	—	—	6-208
10.44	**R4577388**	Dodge	F	6-218
10.44	**R4577387**	Dodge	F	6-218
10.50	**R4578135**	Dodge	F	6-234
10.50	**R4577857**	—	—	6-229
10.63	**R4577787**	—	—	6-227
10.63	**R4577788**	—	—	6-227
10.69	**R4577185**	—	—	6-212
11.00	**R4510588**	—	—	6-200
11.00	**R4510589**	—	—	6-199
11.00	**R4577865**	GMC	R	6-229
11.13	**R4578357**	GMC	R	6-240
11.38	**R4577330**	GMC	F	6-216
11.38	**R4577329**	GMC	F	6-216
11.38	**R4577921**	Dodge	F	6-231
11.41	**R4578183**	Ford Truck	R	6-236
11.50	**R4510637**	—	—	6-204
11.50	**R4577864**	GMC	R	6-229
11.56	**R4577596**	—	—	6-225
11.56	**R4577597**	—	—	6-226
11.75	**R4510584**	—	—	6-200
11.81	**R4577512**	ITE	R	6-224
12.00	**R4510447**	—	—	6-188
12.00	**R4577327**	Chevrolet, GMC	F	6-216
12.13	**R4578182**	Ford Truck	R	6-236
12.25	**R4510448**	—	—	6-188
12.25	**R4577565**	Dodge	F	6-225
12.50	**R4510638**	—	—	6-204
12.50	**R4578016**	—	—	6-232
12.50	**R4578068**	—	—	6-232
12.63	**R4577441**	—	—	6-221
13.00	**R4510563**	—	—	6-197
13.00	**R4578326**	Ford Truck	F	6-239
13.00	**R4577631**	—	—	6-226
13.25	**R4578210**	Ford Truck	F	6-237
13.25	**R4577171**	Dodge	F	6-211
14.00	**R4510585**	—	—	6-200
14.00	**R4510661**	—	—	6-206
14.00	**R4510662**	—	—	6-207
14.25	**R4577312**	Ford	F	6-215
14.38	**R4577169**	Dodge	F	6-211
14.38	**R4577309**	Ford	F	6-214
14.75	**R4588651**	Chevrolet, GMC	R	6-247
14.88	**R4510516**	—	—	6-194
14.88	**R4510517**	—	—	6-194
14.88	**R4577558**	GMC	R	6-225
15.00	**R4578331**	Ford Truck	F	6-240
15.00	**R4577235**	Ford	R	6-212
15.13	**R4510649**	—	—	6-205
15.13	**R4577248**	Ford	F	6-213
15.13	**R4577249**	Ford	F	6-213
15.13	**R4577378**	—	—	6-217
15.25	**R4578410**	Dodge	F	6-242
15.25	**R4578460**	GMC	F	6-242
15.25	**R4578333**	Ford Truck	F	6-240
15.25	**R4578873**	—	—	6-245
15.38	**R4588519**	Ford Truck	F	6-247
15.38	**R4577295**	Chevrolet, GMC	F	6-213
15.44	**R4577419**	Chevrolet, GMC	F	6-219
15.44	**R4577297**	Chevrolet, GMC	F	6-214
15.50	**R4510634**	—	—	6-204
15.50	**R4510654**	—	—	6-206
15.50	**R4577298**	Chevrolet, GMC	F	6-214
15.50	**R4577296**	Chevrolet, GMC	F	6-214
15.50	**R4578403**	GMC	F	6-241
15.50	**R4578327**	Ford Truck	F	6-240
15.50	**R4578259**	GMC	F	6-238
15.63	**R4512292**	—	—	6-209
15.94	**R458529**	—	—	6-187
15.94	**R4577420**	Chevrolet, GMC	F	6-219
16.00	**R4510618**	—	—	6-202
16.00	**R4578312**	—	—	6-239
16.00	**R4578825**	—	—	6-244
16.12	**R4578912**	—	—	6-246
16.13	**R4578145**	Dodge	F	6-235
16.25	**R458633**	—	—	6-187
16.25	**R4510664**	—	—	6-207
16.25	**R4577598**	—	—	6-226
16.25	**R4578072**	—	—	6-232
16.34	**R4512290**	—	—	6-208
16.38	**R4577845**	GMC	F	6-229
16.50	**R4510492**	—	—	6-191
16.81	**R4577765**	Chevrolet, GMC	R	6-228
16.88	**R4510440**	—	—	6-188
16.88	**R4577443**	—	—	6-221
16.88	**R4577444**	—	—	6-221
16.94	**R4577440**	—	—	6-221
17.06	**R4511204**	—	—	6-207
17.12	**R4512421**	—	—	6-209
17.16	**R4578824**	—	—	6-244
17.24	**R4512420**	—	—	6-209
17.25	**R4510520**	—	—	6-195
17.25	**R4510667**	—	—	6-207
17.25	**R4578166**	Ford Truck	R	6-235
17.25	**R4577799**	Dodge	R	6-228
17.38	**R4577311**	Ford	F	6-215
17.38	**R4577415**	Chevrolet, GMC	F	6-218
17.38	**R4577416**	—	—	6-218
17.50	**R4510567**	—	—	6-198
17.75	**R4510528**	—	—	6-195
17.75	**R4577340**	—	—	6-217
17.75	**R4578267**	GMC	F	6-238
17.80	**R4511204**	—	—	6-208
18.00	**R4577078**	—	—	6-210
18.12	**R4578899**	—	—	6-246
18.13	**R4510530**	—	—	6-195
18.13	**R4588472**	—	—	6-246
18.25	**R4510641**	—	—	6-204
18.25	**R4577010**	GMC	R	6-210
18.25	**R4577080**	—	—	6-210
18.25	**R4577083**	—	—	6-211
18.25	**R4577767**	Chevrolet, GMC	F	6-228
18.25	**R4577766**	Chevrolet, GMC	F	6-228

(Continued on next page)

HYDRAULIC BRAKE HOSE PROGRESSIVE SIZE LISTING

Sorted By Overall Length (Cont'd.)

OVERALL LENGTH	MERITOR PART NO.	APPLICATION	POSITION	PAGE NO.
18.31	**R458634**	—	—	6-187
18.31	**R4577500**	—	—	6-223
18.32	**R4577328**	Chevrolet, GMC	R	6-216
18.38	**R4510592**	—	—	6-201
18.38	**R4577019**	Chevrolet, GMC	R	6-210
18.38	**R4578206**	—	—	6-236
18.42	**R4512419**	—	—	6-209
18.42	**R4512430**	—	—	6-210
18.45	**R4577482**	—	—	6-223
18.50	**R4510569**	—	—	6-199
18.50	**R4510617**	—	—	6-202
18.50	**R4510651**	—	—	6-205
18.50	**R4577316**	Dodge	F	6-215
18.50	**R4577317**	Dodge	F	6-215
18.69	**R4577479**	—	—	6-223
18.69	**R4588530**	GMC	R	6-247
18.75	**R4578258**	GMC	F	6-238
18.75	**R4578169**	Ford Truck	F	6-235
18.75	**R4578802**	—	—	6-244
18.75	**R4578874**	—	—	6-245
18.88	**R4577851**	GMC	R	6-229
18.88	**R4578898**	—	—	6-246
19.13	**R4578137**	—	—	6-234
19.19	**R4510446**	—	—	6-188
19.25	**R4510510**	—	—	6-193
19.25	**R4510511**	—	—	6-194
19.25	**R4577613**	Ford Truck	R	6-226
19.25	**R4577900**	Chevrolet, GMC	F	6-230
19.25	**R4577901**	Chevrolet, GMC	F	6-230
19.25	**R4577247**	Ford	R	
19.50	**R4578144**	Dodge	F	6-235
19.50	**R4577769**	GMC	F	6-228
19.50	**R4577768**	GMC	F	6-228
19.50	**R4588312**	—	—	6-246
19.56	**R4577189**	Ford	R	6-212
19.58	**R4512291**	—	—	6-208
19.63	**4510532**	—	—	6-196
19.63	**R4577428**	Chevrolet, GMC	F	6-220
19.63	**R4577612**	Ford Truck	R	6-226
19.65	**R4578386**	—	—	6-241
19.73	**R4578897**	—	—	6-246
19.81	**R4510471**	—	—	6-190
19.88	**R4510472**	—	—	6-190
19.88	**R4510525**	—	—	6-195
19.88	**R4578129**	Dodge	F	6-233
19.88	**R4578130**	—	—	6-233
19.88	**R4577909**	—	—	6-230
20.00	**R4510512**	—	—	6-194
20.00	**R4510571**	—	—	6-199
20.00	**R4577277**	—	—	6-213
20.12	**R4577495**	Chevrolet	F	6-223
20.13	**R4510515**	—	—	6-194
20.13	**R4578666**	Ford Truck	R	6-243
20.19	**R458083**	—	—	6-186
20.19	**R4578084**	—	—	6-233
20.25	**R4510552**	—	—	6-197
20.25	**R4510553**	—	—	6-197
20.25	**R4511296**	—	—	6-208
20.25	**R4578332**	Ford Truck	R	6-240
20.25	**R4578134**	Dodge	F	6-234
20.31	**R458473**	—	—	6-187

OVERALL LENGTH	MERITOR PART NO.	APPLICATION	POSITION	PAGE NO.
20.33	**R4578480**	—	—	6-242
20.50	**R4510514**	—	—	6-194
20.50	**R4577321**	Chevrolet, GMC	F	6-216
20.50	**R4577614**	Ford Truck	R	6-226
20.50	**R4577927**	—	—	6-231
20.53	**R4578438**	—	—	6-242
20.56	**R4577379**	—	—	6-217
20.56	**R4577380**	—	—	6-218
20.63	**R4577299**	—	—	6-214
20.63	**R4577300**	—	—	6-214
20.75	**R4510597**	—	—	6-201
20.75	**R4510604**	—	—	6-202
20.75	**R4577418**	—	—	6-219
20.75	**R4577430**	Chevrolet, GMC	F	6-220
20.75	**R4577421**	Chevrolet, GMC	F	6-219
20.75	**R4577320**	Chevrolet, GMC	F	6-216
20.75	**R4578165**	—	—	6-235
20.75	**R4578305**	Ford Truck	R	6-239
20.75	**R4578184**	Ford Truck	R	6-236
20.75	**R4578187**	Ford Truck	F	6-236
20.75	**R4577418**	Chevrolet, GMC	F	6-219
20.75	**R4578219**	—	—	6-237
20.88	**R4510549**	—	—	6-197
20.88	**R4510550**	—	—	6-197
21.00	**R4510650**	—	—	6-205
21.00	**R4511204**	—	—	6-207
21.00	**R4578133**	Dodge	F	6-234
21.00	**R4577245**	Ford Truck	F	6-213
21.13	**R45F124053**	Ford Truck	F	6-248
21.13	**R4510558**	—	—	6-198
21.13	**R4578610**	Ford Truck	R	6-243
21.13	**R4577315**	Dodge	R	6-215
21.13	**R4578137**	—	—	6-234
21.16	**R4510453**	—	—	6-189
21.19	**R4577147**	Ford Truck	R	6-211
21.25	**R458458**	—	—	6-186
21.25	**R4510466**	—	—	6-190
21.25	**R4511071**	—	—	6-207
21.25	**R4511244**	—	—	6-208
21.25	**R4578392**	GMC	F	6-241
21.25	**R4578790**	GMC	F	6-244
21.31	**R4577870**	Ford Truck	R	6-230
21.36	**R4577928**	—	—	6-232
21.38	**R4577417**	Chevrolet, GMC	F	6-218
21.44	**R4577252**	GMC	R	6-213
21.50	**R4510450**	—	—	6-190
21.50	**R4510537**	—	—	6-196
21.50	**R4510594**	—	—	6-201
21.50	**R4577870**	—	—	6-230
21.50	**R4577463**	Ford Truck	F	6-222
21.50	**R4578618**	Ford Truck	R	6-243
21.58	**R4578774**	—	—	6-243
21.63	**R4510500**	—	—	6-192
21.63	**R4588561**	IHC Truck	R	6-247
21.63	**R4577761**	Chevrolet, GMC	F	6-227
21.63	**R4577760**	Chevrolet, GMC	F	6-227
21.75	**R4510568**	—	—	6-198
21.88	**R4510494**	—	—	6-191
21.88	**R4510495**	—	—	6-191
21.88	**R4510503**	—	—	6-192
21.88	**R4510504**	—	—	6-192

HYDRAULIC BRAKE HOSE PROGRESSIVE SIZE LISTING

Sorted By Overall Length (Cont'd.)

OVERALL LENGTH	MERITOR PART NO.	APPLICATION	POSITION	PAGE NO.
21.88	**R4510538**	—	—	6-196
21.88	**R4510539**	—	—	6-196
21.88	**R4578085**	Dodge	R	6-233
22.00	**R4510457**	—	—	6-189
22.00	**R4510574**	—	—	6-199
22.00	**R4577334**	—	—	6-217
22.00	**R4577429**	Chevrolet, GMC	F	6-220
22.13	**R4510518**	—	—	6-195
22.13	**R4578885**	—	—	6-245
22.25	**R4578438**	GMC	F	6-242
22.25	**R4510643**	GMC	R	6-205
22.25	**R4510665**	—	—	6-207
22.38	**R4510487**	—	—	6-191
22.38	**R4510488**	—	—	6-191
22.38	**R4510641**	—	—	6-205
22.38	**R4578360**	GMC	R	6-241
22.38	**R4577564**	—	—	6-225
22.50	**R4510565**	—	—	6-198
22.50	**R4578226**	GMC	F	6-238
22.50	**R4578843**	—	—	6-244
22.63	**R4577187**	Chevrolet, GMC	F	6-212
22.75	**R4510596**	—	—	6-201
22.75	**R4578324**	Ford Truck	F	6-239
22.81	**R4577914**	—	—	6-231
22.88	**R4510458**	—	—	6-189
22.88	**R4577548**	GMC	F	6-224
22.88	**R4577537**	Dodge	R	6-224
23.00	**R4510459**	—	—	6-189
23.00	**R4510566**	—	—	6-198
23.00	**R4578132**	Dodge	F	6-234
23.13	**R4510451**	—	—	6-190
23.16	**R4510452**	—	—	6-189
23.16	**R4577241**	Chevrolet, GMC	F	6-212
23.19	**R4577481**	GMC	F	6-223
23.22	**R4578303**	Ford Truck	F	6-238
23.25	**R458484**	—	—	6-187
23.25	**R4578548**	GMC	F	6-243
23.25	**R4577425**	GMC	F	6-219
23.25	**R4577332**	GMC	F	6-217
23.38	**R4577240**	Chevrolet, GMC	F	6-212
23.50	**R458545**	—	—	6-186
23.50	**R4510505**	—	—	6-193
23.50	**R4510506**	—	—	6-193
23.75	**R4578001**	Ford Truck	F	6-232
23.88	**R4577333**	GMC	F	6-217
24.00	**R4510595**	—	—	6-201
24.00	**R4510602**	—	—	6-202
24.00	**R4510503**	—	—	6-202
24.00	**R4578325**	Ford Truck	F	6-239
24.00	**R4578208**	Ford Truck	F	6-237
24.06	**R4510491**	—	—	6-191
24.13	**R4577427**	Chevrolet, GMC	F	6-220
24.19	**R4510497**	—	—	6-192
24.31	**R4577560**	Chevrolet, GMC	F	6-225
24.25	**R4510644**	GMC	R	6-205
24.25	**R4578209**	Ford Truck	F	6-237
24.50	**R4577503**	IHC Truck	F	6-224
24.63	**R4578159**	Ford Truck	F	6-235
24.69	**R4510534**	GMC	F	6-196
24.70	**R4512427**	—	—	6-209
24.70	**R4512428**	—	—	6-210
24.75	**R4510598**	—	—	6-201
24.75	**R4510599**	—	—	6-202
24.81	**R4510454**	—	—	6-189
25.00	**R4577915**	Dodge	R	6-231
25.03	**R4577135**	—	—	6-211
25.13	**R4577460**	Ford Truck	F	6-222
25.50	**R4510652**	—	—	6-206
25.50	**R4510653**	—	—	6-206
25.67	**R4512400**	—	—	6-209
25.75	**R4510509**	—	—	6-193
25.75	**R4578787**	GMC	F	6-244
25.75	**R4578224**	GMC	F	6-237
25.88	**R4578227**	GMC	F	6-238
25.88	**R4578437**	GMC	F	6-242
25.88	**R4588558**	Ford Truck	F	6-247
26.13	**R4577314**	Dodge	R	6-215
26.25	**R4510564**	—	—	6-198
26.25	**R4577826**	—	—	6-229
26.63	**R4577457**	Ford Truck	F	6-222
27.75	**R4578313**	—	—	6-239
28.14	**R4578881**	—	—	6-245
28.16	**R4578880**	—	—	6-245
28.19	**R4588564**	—	—	6-247
28.50	**R4510659**	—	—	6-206
28.50	**R4510660**	—	—	6-206
29.13	**R4510582**	—	—	6-199
29.13	**R4577686**	Ford Truck	F	6-227
29.38	**R4577484**	GMC	F	6-223
29.50	**R4510545**	—	—	6-196
29.50	**R4510546**	—	—	6-197
31.06	**R4577453**	Ford Truck	F	6-221
31.13	**R4577452**	Ford Truck	F	6-221
31.19	**R4577454**	Ford Truck	F	6-222
31.31	**R4577455**	Ford Truck	F	6-222
31.31	**R4578218**	—	—	6-237
31.50	**R4577868**	GMC	F	6-230
31.81	**R4577461**	Ford	F	6-222
32.06	**R458636**	—	—	6-188
32.06	**R4577514**	ITE	F	6-224
32.48	**R4577868**	—	—	6-230
34.00	**R4510587**	—	—	6-200
36.75	**R4510583**	—	—	6-200
36.75	**R4577544**	GMC	F	6-224
37.00	**R4577559**	Chevrolet, GMC	F	6-225
37.94	**R458632**	ITE	F	6-187
38.94	**R4577860**	—	—	6-230
39.25	**R4578387**	Dodge	F	6-241
43.50	**R458635**	ITE	F	6-188
47.50	**R4510636**	—	—	6-204
48.50	**R10635**	—	—	6-204
137.30	**R4578876**	—	—	6-245
—	**R4577841**	—	—	6-227
—	**R4578117**	—	—	6-233
—	**R4578118**	—	—	6-233

HYDRAULIC BRAKE HOSES

Listed in Meritor Part Number Sequence

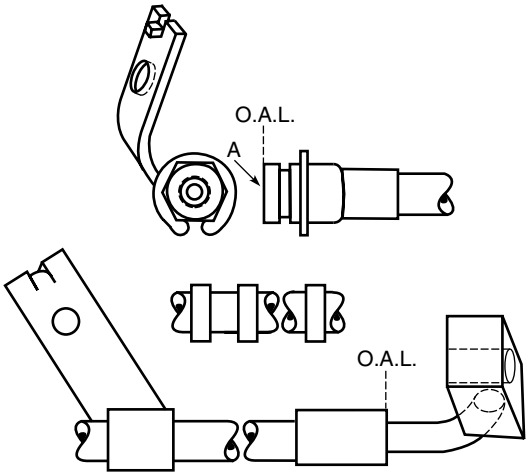

MERITOR NO.	REPLACES WAGNER NO.	FITTING SIZE A	FITTING SIZE B	FITTING SIZE C	BOLT HOLE	O.A.L.
R458083	F113927	3/8"-24	—	—	7/16"	20 3/16"

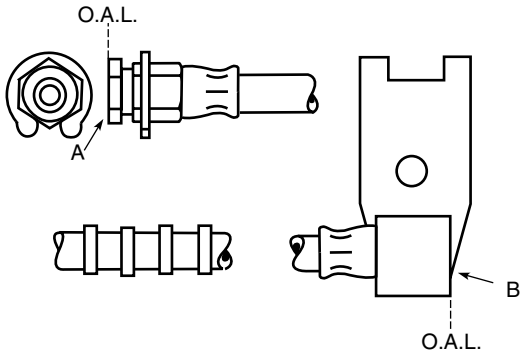

MERITOR NO.	REPLACES WAGNER NO.	FITTING SIZE A	FITTING SIZE B	FITTING SIZE C	BOLT HOLE	O.A.L.
R458458	F106332	3/8"-24	3/8"-24	—	—	21 1/4"

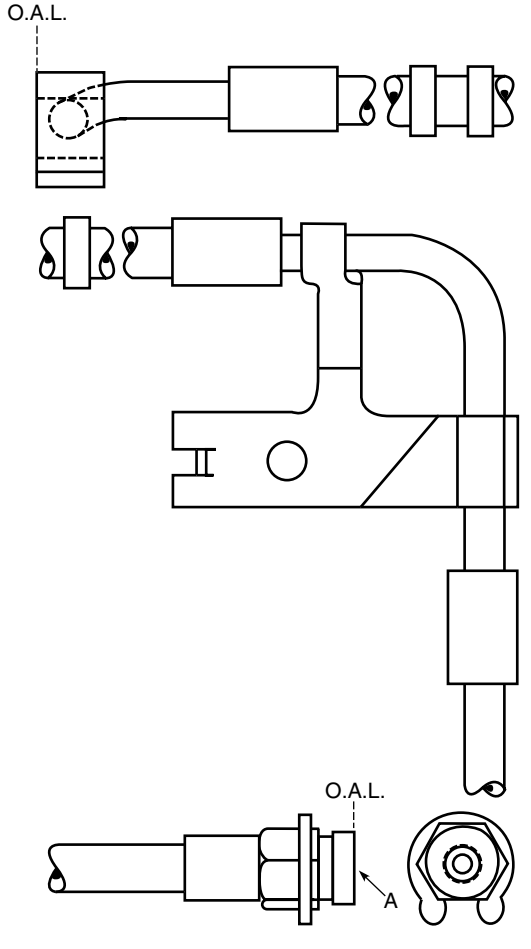

MERITOR NO.	REPLACES WAGNER NO.	FITTING SIZE A	FITTING SIZE B	FITTING SIZE C	BOLT HOLE	O.A.L.
R458544	F114873	3/8"-24	—	—	7/16"	23 1/2"

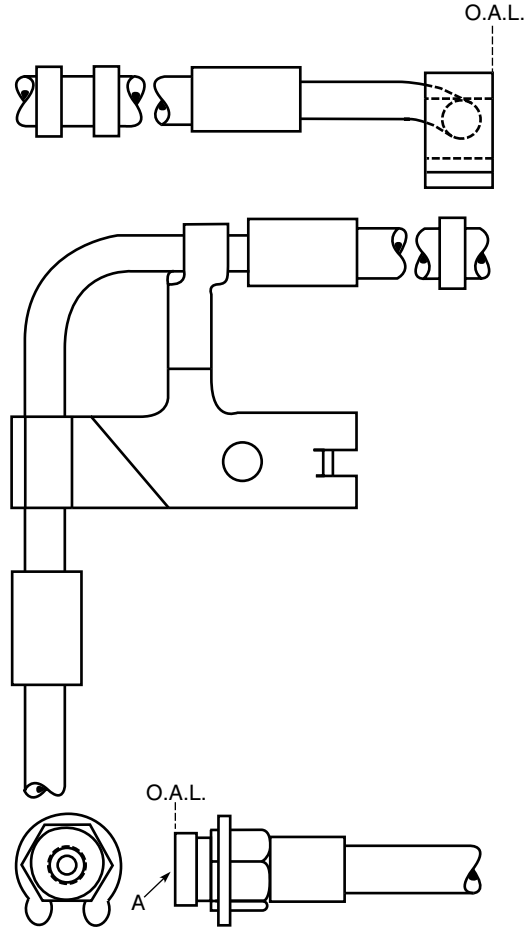

MERITOR NO.	REPLACES WAGNER NO.	FITTING SIZE A	FITTING SIZE B	FITTING SIZE C	BOLT HOLE	O.A.L.
R458545	F114874	3/8"-24	—	—	7/16"	23 1/2"

HYDRAULIC BRAKE HOSES

Listed in Meritor Part Number Sequence

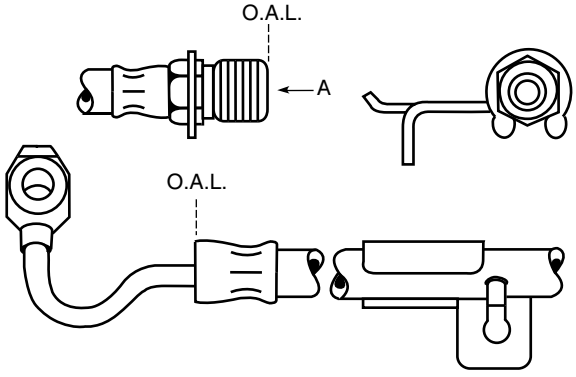

MERITOR NO.	REPLACES WAGNER NO.	FITTING SIZE A	FITTING SIZE B	FITTING SIZE C	BOLT HOLE	O.A.L.
R458473	F102467	3/8"-24 Int. 5/8"-18 Ext.	—	—	3/8"	20 5/16"

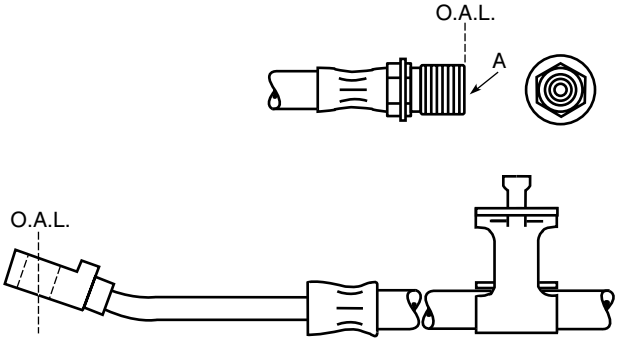

MERITOR NO.	REPLACES WAGNER NO.	FITTING SIZE A	FITTING SIZE B	FITTING SIZE C	BOLT HOLE	O.A.L.
R458484	F88958	3/8"-24 Int. 5/8"-18 Ext.	—	—	7/16"	23 1/4"

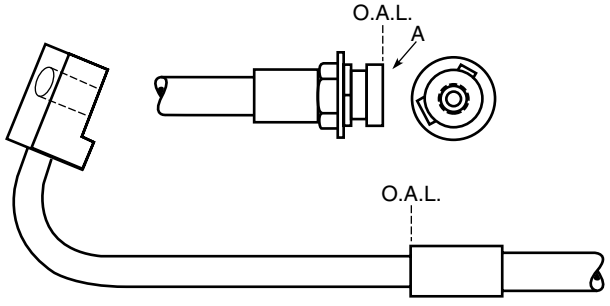

MERITOR NO.	REPLACES WAGNER NO.	FITTING SIZE A	FITTING SIZE B	FITTING SIZE C	BOLT HOLE	O.A.L.
R458529	F107275	3/8"-24	—	—	3/8"	15 15/16"

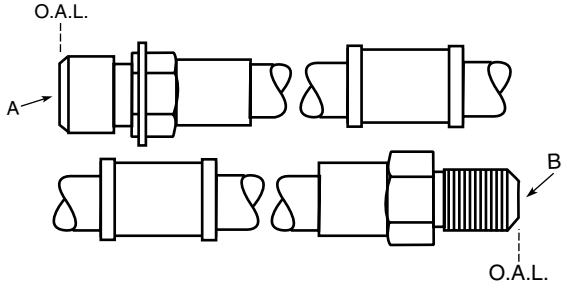

MERITOR NO.	REPLACES WAGNER NO.	FITTING SIZE A	FITTING SIZE B	FITTING SIZE C	BOLT HOLE	O.A.L.
R458632	F107731	7/16"-24	7/16"-24	—	—	37 15/16"

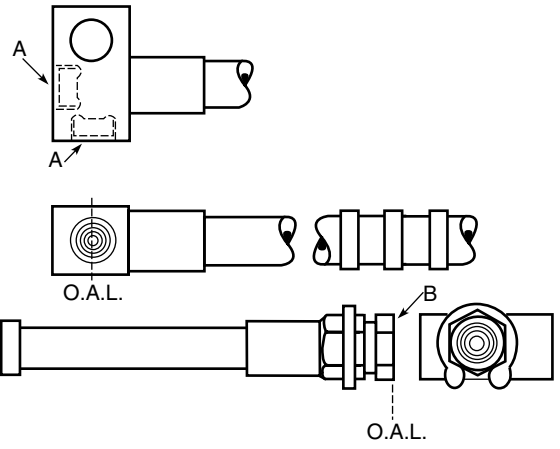

MERITOR NO.	REPLACES WAGNER NO.	FITTING SIZE A	FITTING SIZE B	FITTING SIZE C	BOLT HOLE	O.A.L.
R458633	F114038	3/8"-24	3/8"-24	—	7/16"	16 1/4"

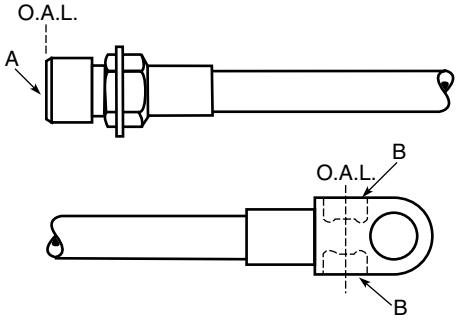

MERITOR NO.	REPLACES WAGNER NO.	FITTING SIZE A	FITTING SIZE B	FITTING SIZE C	BOLT HOLE	O.A.L.
R458634	F107734	7/16"-24	7/16"-24	—	7/16"	18 5/16"

HYDRAULIC BRAKE HOSES

Listed in Meritor Part Number Sequence

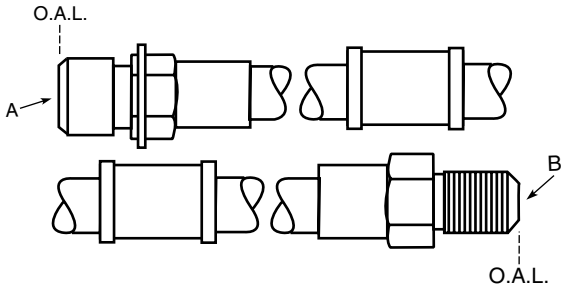

MERITOR NO.	REPLACES WAGNER NO.	FITTING SIZE A	FITTING SIZE B	FITTING SIZE C	BOLT HOLE	O.A.L.
R458635	F113150	7/16"-24	7/16"-24	—	—	43 1/2"

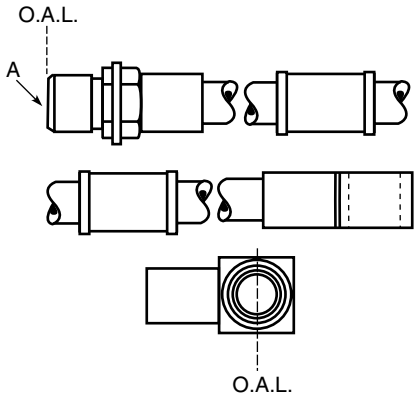

MERITOR NO.	REPLACES WAGNER NO.	FITTING SIZE A	FITTING SIZE B	FITTING SIZE C	BOLT HOLE	O.A.L.
R458636	F113151	7/16"-24	—	—	3/8"	32 1/16"

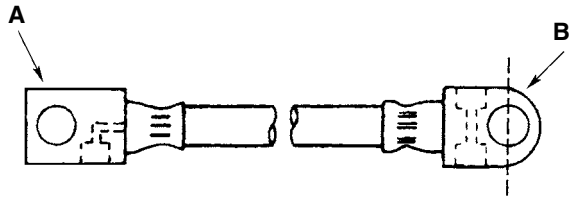

MERITOR NO.	REPLACES WAGNER NO.	FITTING SIZE A	FITTING SIZE B	FITTING SIZE C	BOLT HOLE	O.A.L.
R4510440	F64846	3/8"-24	3/8"-24	—	—	16 5/8"

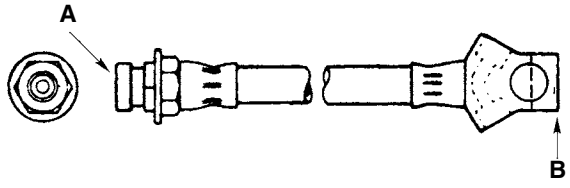

MERITOR NO.	REPLACES WAGNER NO.	FITTING SIZE A	FITTING SIZE B	FITTING SIZE C	BOLT HOLE	O.A.L.
R4510446	F104998 F84512 F88998	3/8"-24	3/8"-24	—	—	19 3/16"

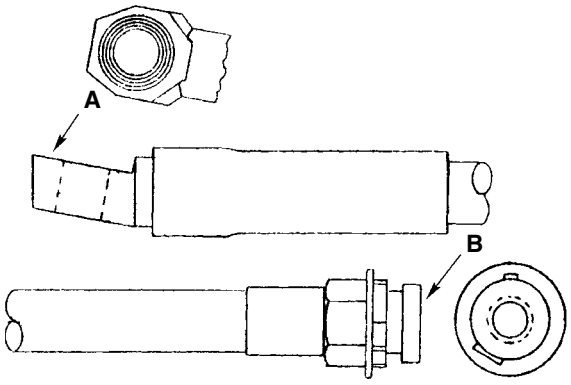

MERITOR NO.	REPLACES WAGNER NO.	FITTING SIZE A	FITTING SIZE B	FITTING SIZE C	BOLT HOLE	O.A.L.
R4510447	F106887	No Thd.	3/8"-24	—	—	12"

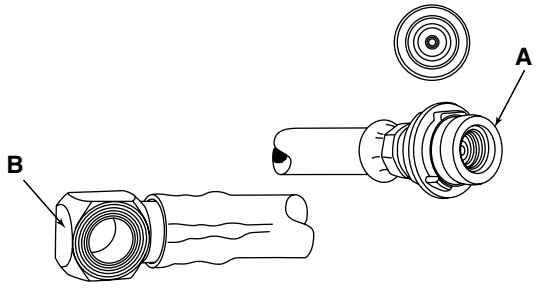

MERITOR NO.	REPLACES WAGNER NO.	FITTING SIZE A	FITTING SIZE B	FITTING SIZE C	BOLT HOLE	O.A.L.
R4510448	F106886	3/8"-24	No. Thd.	—	—	12 1/4"

HYDRAULIC BRAKE HOSES

Listed in Meritor Part Number Sequence

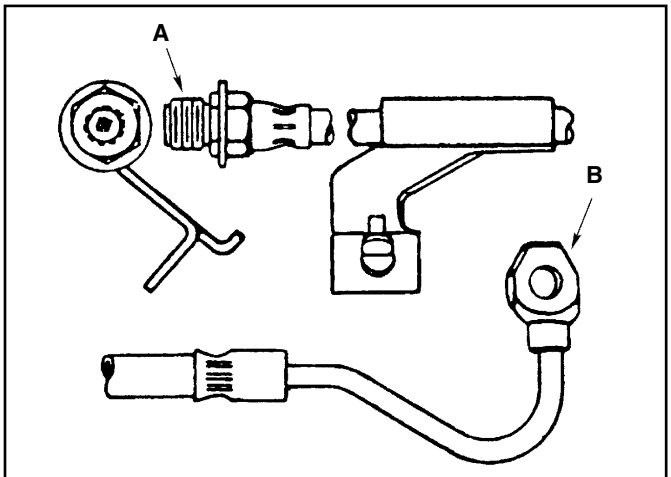

MERITOR NO.	REPLACES WAGNER NO.	FITTING SIZE A	FITTING SIZE B	FITTING SIZE C	BOLT HOLE	O.A.L.
R4510452	—	3/8"-24 Int. 5/8"-18 Ent.	No Thread	—	—	23 5/32"

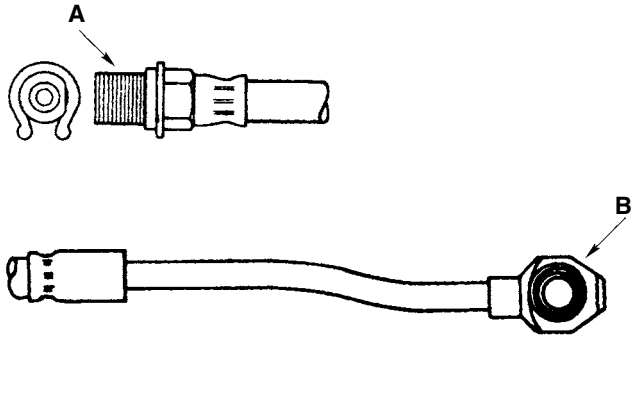

MERITOR NO.	REPLACES WAGNER NO.	FITTING SIZE A	FITTING SIZE B	FITTING SIZE C	BOLT HOLE	O.A.L.
R4510453	F98926	3/8"-24 Int. 5/8"-18 Ent.	No Thread	—	—	21 5/32"

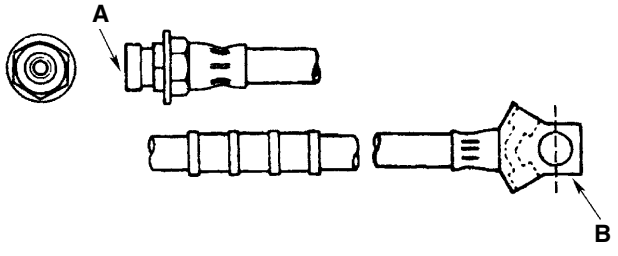

MERITOR NO.	REPLACES WAGNER NO.	FITTING SIZE A	FITTING SIZE B	FITTING SIZE C	BOLT HOLE	O.A.L.
R4510454	F100771	3/8"-24	3/8"-24	—	—	24 13/16"

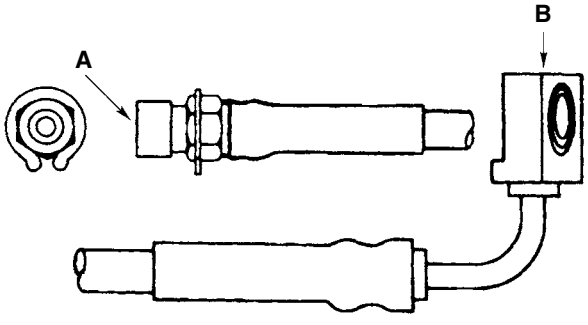

MERITOR NO.	REPLACES WAGNER NO.	FITTING SIZE A	FITTING SIZE B	FITTING SIZE C	BOLT HOLE	O.A.L.
R4510457	F98919	3/8"-24	No. Thread	—	—	22"

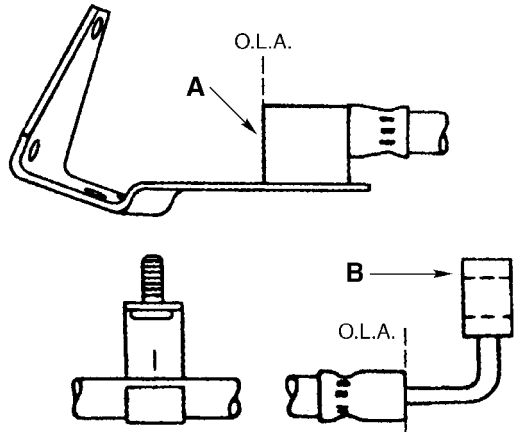

MERITOR NO.	REPLACES WAGNER NO.	FITTING SIZE A	FITTING SIZE B	FITTING SIZE C	BOLT HOLE	O.A.L.
R4510458	F98932 F106625	3/8"-24	No. Thread	—	—	22 7/8"

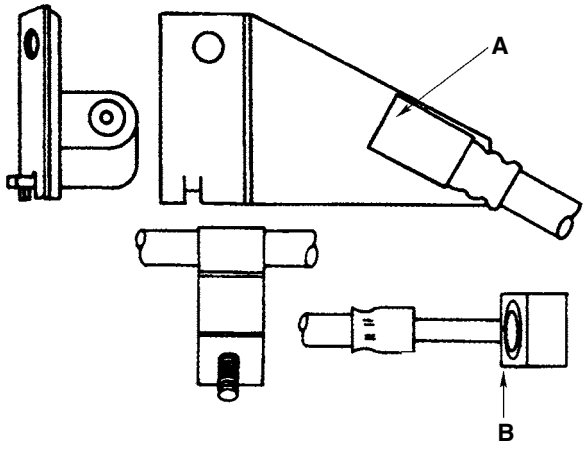

MERITOR NO.	REPLACES WAGNER NO.	FITTING SIZE A	FITTING SIZE B	FITTING SIZE C	BOLT HOLE	O.A.L.
R4510459	F98931	3/8"-24	No. Thread	—	—	23"

HYDRAULIC BRAKE HOSES

Listed in Meritor Part Number Sequence

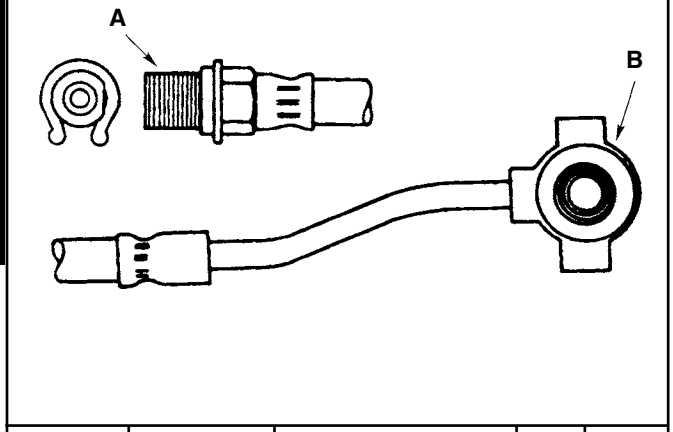

MERITOR NO.	REPLACES WAGNER NO.	FITTING SIZE A	FITTING SIZE B	FITTING SIZE C	BOLT HOLE	O.A.L.
R4510450	F98925	3/8"-24 Int. 5/8"-18 Ent.	No Thread	—	—	21 1/2"

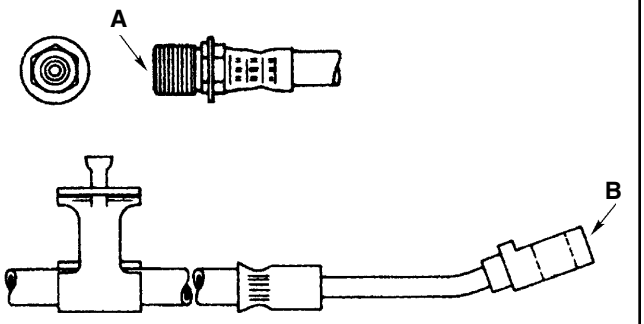

MERITOR NO.	REPLACES WAGNER NO.	FITTING SIZE A	FITTING SIZE B	FITTING SIZE C	BOLT HOLE	O.A.L.
R4510451	F80018 F88957	3/8"-24 Int. 5/8"-18 Ent.	No Thread	—	—	23 1/8"

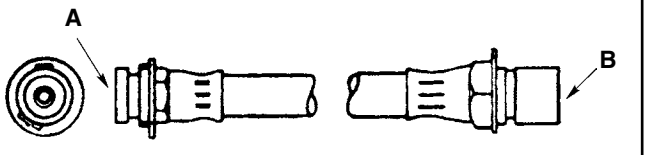

MERITOR NO.	REPLACES WAGNER NO.	FITTING SIZE A	FITTING SIZE B	FITTING SIZE C	BOLT HOLE	O.A.L.
R4510462	F106345 F118426 F118427 F123285	M10x1	M10x1	—	—	8"

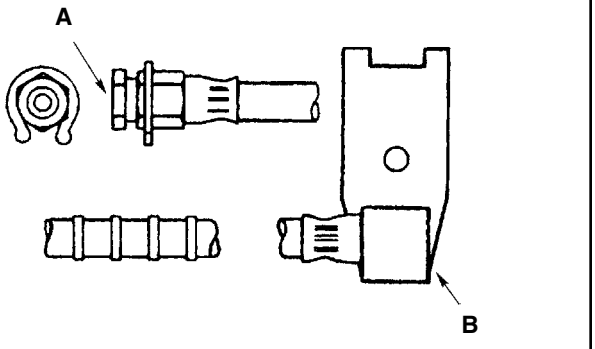

MERITOR NO.	REPLACES WAGNER NO.	FITTING SIZE A	FITTING SIZE B	FITTING SIZE C	BOLT HOLE	O.A.L.
R4510466	F106332	3/8"-24	3/8"-24	—	—	21 1/4"

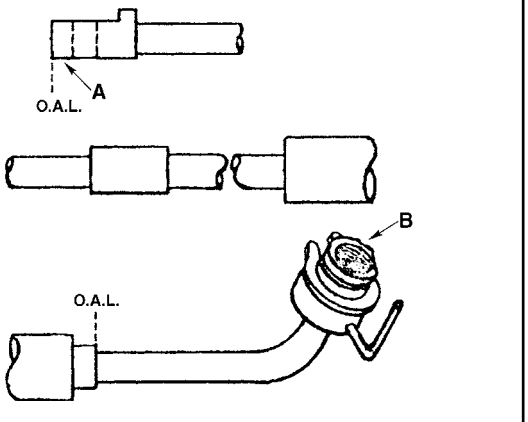

MERITOR NO.	REPLACES WAGNER NO.	FITTING SIZE A	FITTING SIZE B	FITTING SIZE C	BOLT HOLE	O.A.L.
R4510471	F111132	No. Thd.	3/8"-24	—	—	19 13/16"

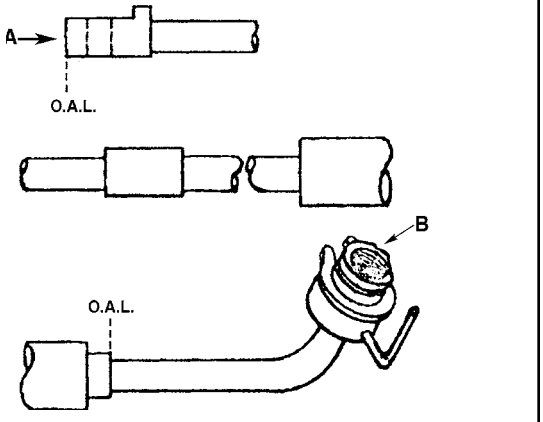

MERITOR NO.	REPLACES WAGNER NO.	FITTING SIZE A	FITTING SIZE B	FITTING SIZE C	BOLT HOLE	O.A.L.
R4510472	F111133	No. Thd.	3/8"-24	—	—	19 7/8"

HYDRAULIC BRAKE HOSES

Listed in Meritor Part Number Sequence

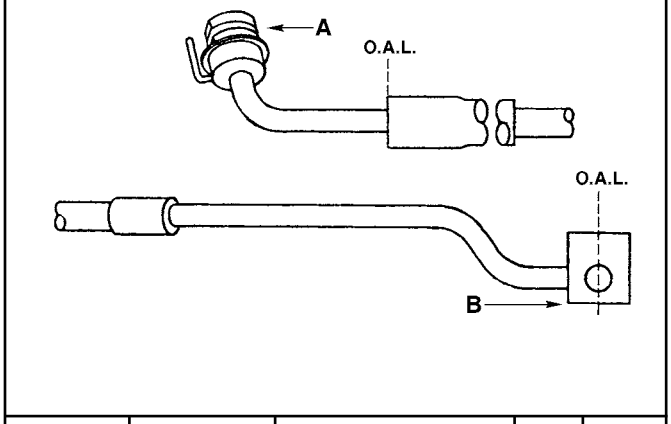

MERITOR NO.	REPLACES WAGNER NO.	FITTING SIZE A	FITTING SIZE B	FITTING SIZE C	BOLT HOLE	O.A.L.
R4510487	F111953	3/8"-24	No Thd.	—	—	22 3/8"

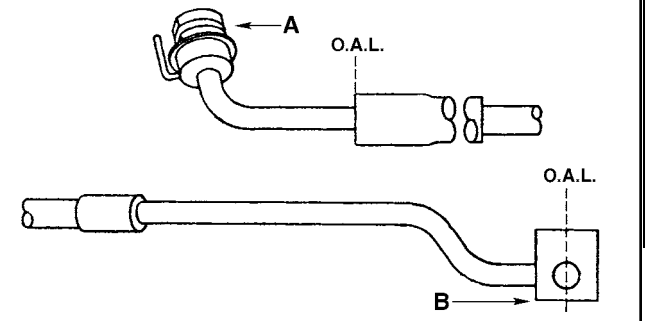

MERITOR NO.	REPLACES WAGNER NO.	FITTING SIZE A	FITTING SIZE B	FITTING SIZE C	BOLT HOLE	O.A.L.
R4510488	F111952	3/8"-24	No Thd.	—	—	22 3/8"

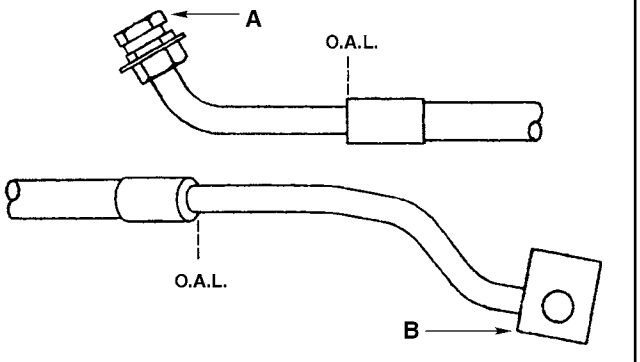

MERITOR NO.	REPLACES WAGNER NO.	FITTING SIZE A	FITTING SIZE B	FITTING SIZE C	BOLT HOLE	O.A.L.
R4510494	F111955	3/8"-24	No Thd.	—	—	21 7/8"

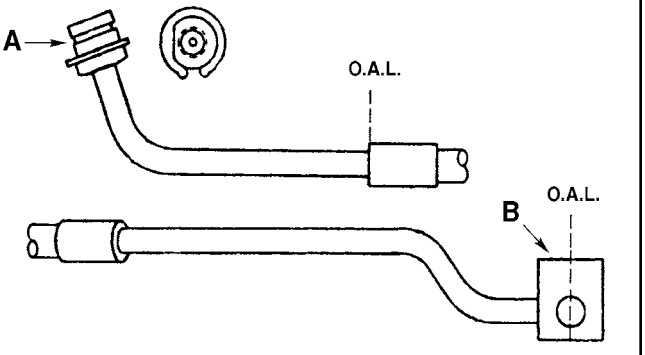

MERITOR NO.	REPLACES WAGNER NO.	FITTING SIZE A	FITTING SIZE B	FITTING SIZE C	BOLT HOLE	O.A.L.
R4510491	F111957	3/8"-24	No Thd.	—	—	24 1/16"

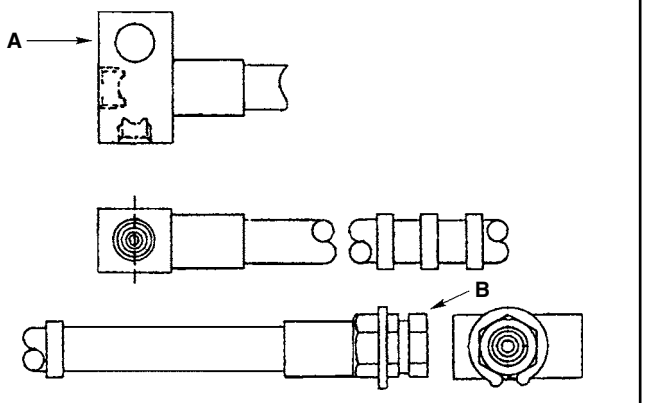

MERITOR NO.	REPLACES WAGNER NO.	FITTING SIZE A	FITTING SIZE B	FITTING SIZE C	BOLT HOLE	O.A.L.
R4510492	F111951 F114038	7/16"-24 3/8"-24	3/8"-24	—	—	16 1/2"

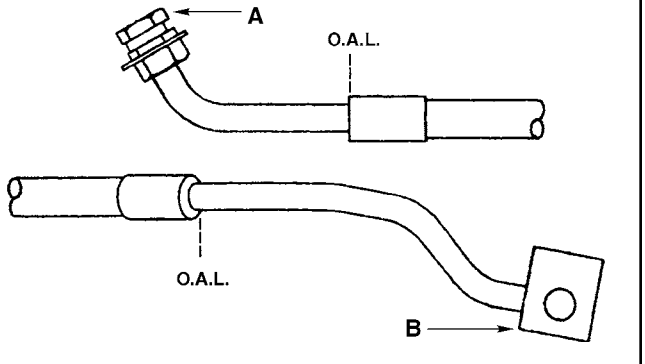

MERITOR NO.	REPLACES WAGNER NO.	FITTING SIZE A	FITTING SIZE B	FITTING SIZE C	BOLT HOLE	O.A.L.
R4510495	F111954	3/8"-24	No Thd.	—	—	21 7/8"

HYDRAULIC BRAKE HOSES

Listed in Meritor Part Number Sequence

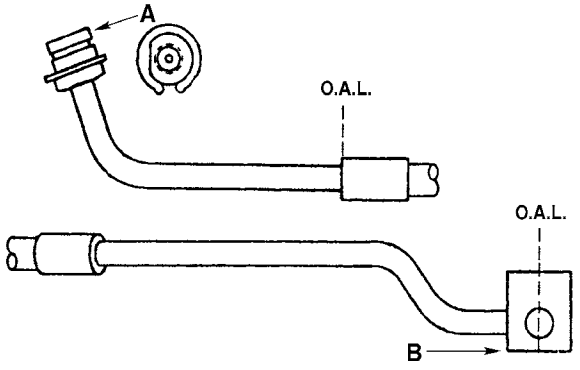

MERITOR NO.	REPLACES WAGNER NO.	FITTING SIZE A	FITTING SIZE B	FITTING SIZE C	BOLT HOLE	O.A.L.
R4510497	F111956	3/8"-24	No Thd.	—	—	24 3/16"

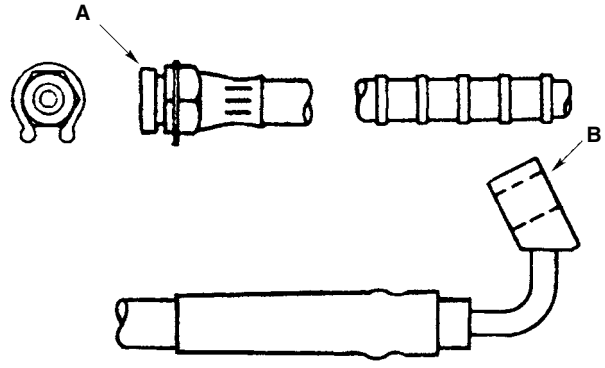

MERITOR NO.	REPLACES WAGNER NO.	FITTING SIZE A	FITTING SIZE B	FITTING SIZE C	BOLT HOLE	O.A.L.
R4510498	F84529 F97661 F97662	3/8"-24	No Thd.	—	—	10 3/16"

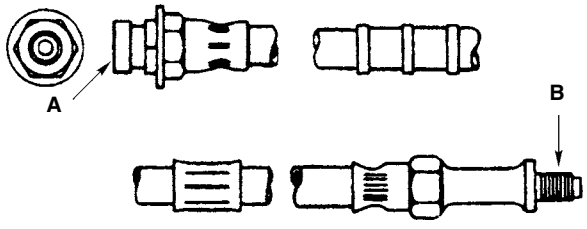

MERITOR NO.	REPLACES WAGNER NO.	FITTING SIZE A	FITTING SIZE B	FITTING SIZE C	BOLT HOLE	O.A.L.
R4510500	F102335 F102477	3/8"-24	7/16"-20	—	—	21 5/8"

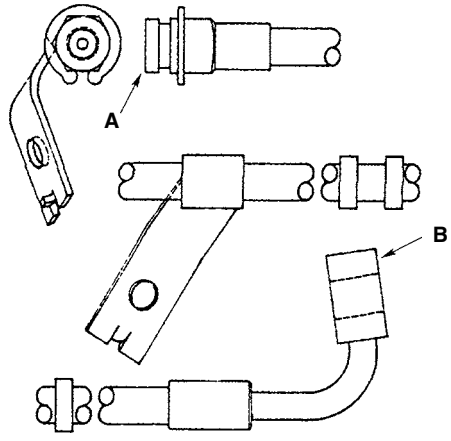

MERITOR NO.	REPLACES WAGNER NO.	FITTING SIZE A	FITTING SIZE B	FITTING SIZE C	BOLT HOLE	O.A.L.
R4510503	F118081	3/8"-24	No Thd.	—	—	21 7/8"

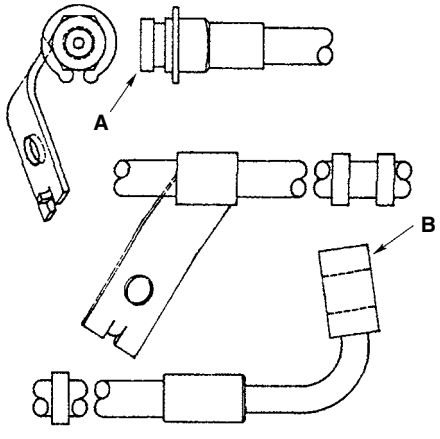

MERITOR NO.	REPLACES WAGNER NO.	FITTING SIZE A	FITTING SIZE B	FITTING SIZE C	BOLT HOLE	O.A.L.
R4510504	F118082	3/8"-24	No Thd.	—	—	21 7/8"

HYDRAULIC BRAKE HOSES

Listed in Meritor Part Number Sequence

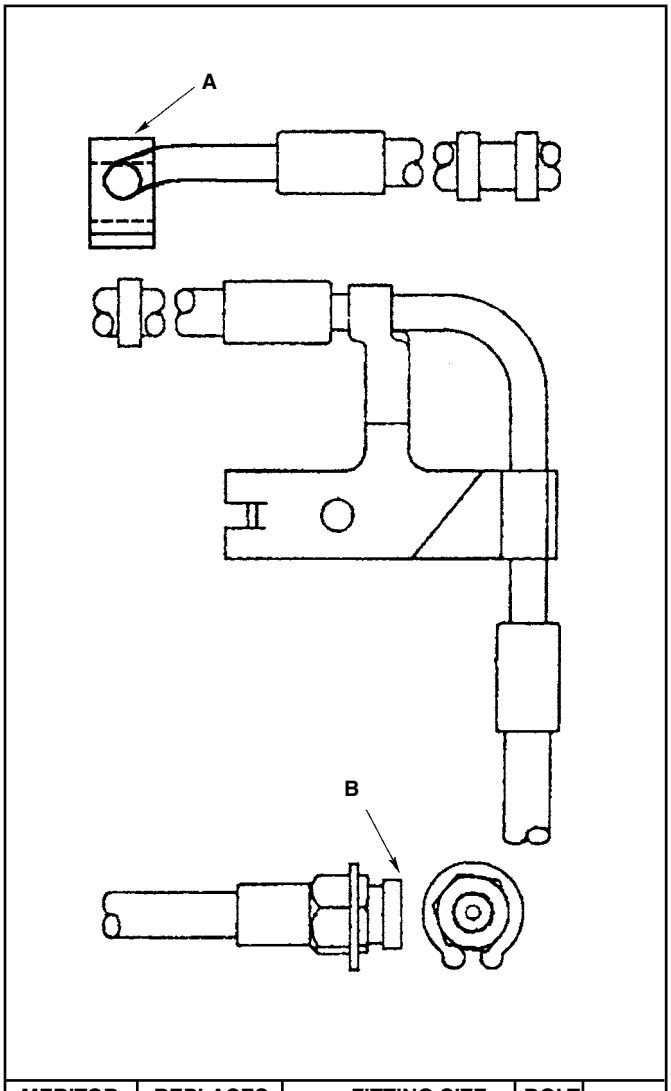

MERITOR NO.	REPLACES WAGNER NO.	FITTING SIZE A	FITTING SIZE B	FITTING SIZE C	BOLT HOLE	O.A.L.
R4510505	F114874	M10x1	M10x1	—	—	23 1/2"

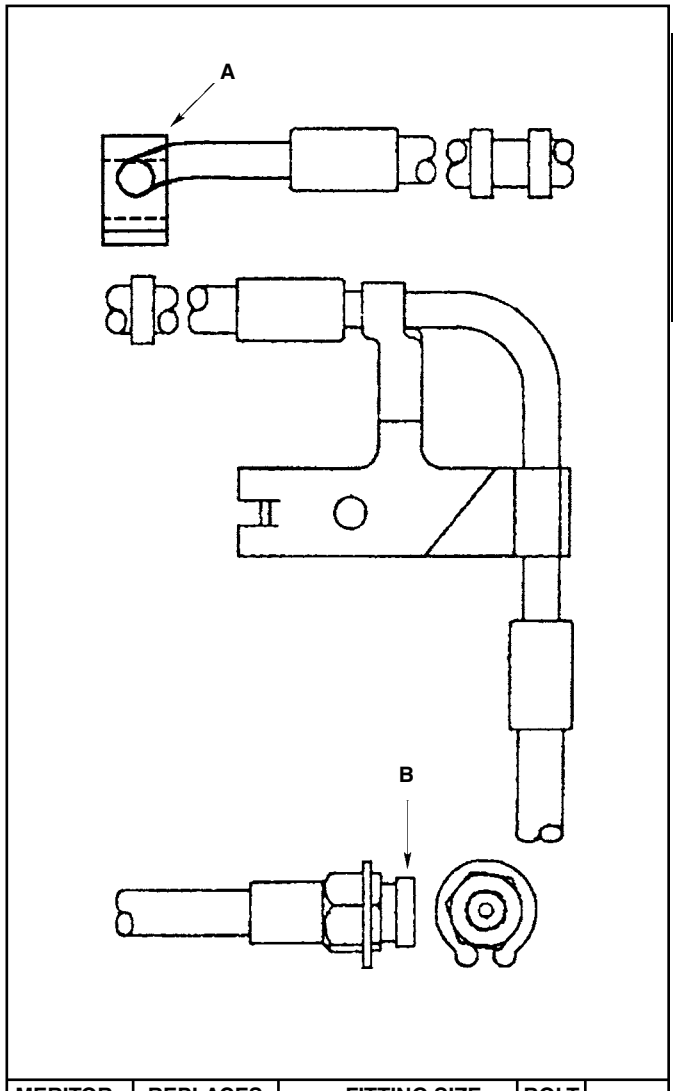

MERITOR NO.	REPLACES WAGNER NO.	FITTING SIZE A	FITTING SIZE B	FITTING SIZE C	BOLT HOLE	O.A.L.
R4510506	F114873	No Thd.	3/8"-24	—	—	23 1/2"

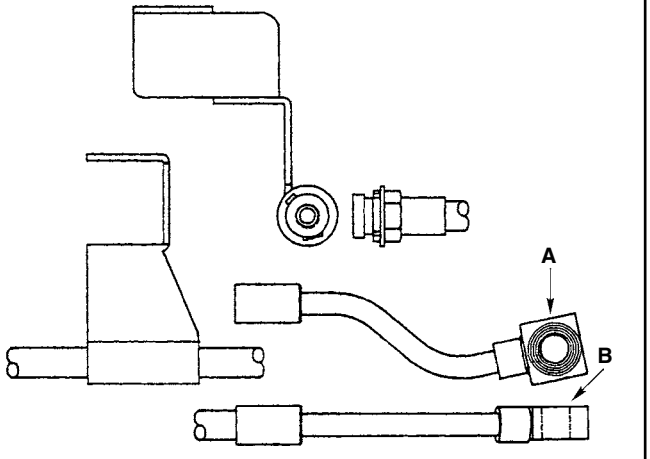

MERITOR NO.	REPLACES WAGNER NO.	FITTING SIZE A	FITTING SIZE B	FITTING SIZE C	BOLT HOLE	O.A.L.
R4510509	F116851 F120542	No Thd.	3/8"-24	—	—	25 3/4"

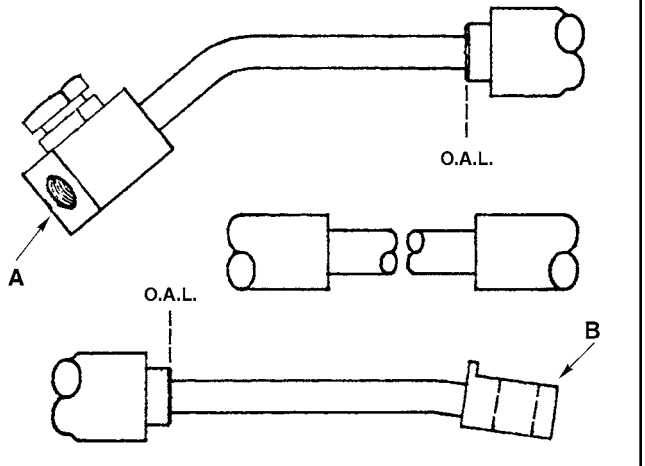

MERITOR NO.	REPLACES WAGNER NO.	FITTING SIZE A	FITTING SIZE B	FITTING SIZE C	BOLT HOLE	O.A.L.
R4510510	F120538	3/8"-24	No Thd.	—	—	19 1/4"

HYDRAULIC BRAKE HOSES

Listed in Meritor Part Number Sequence

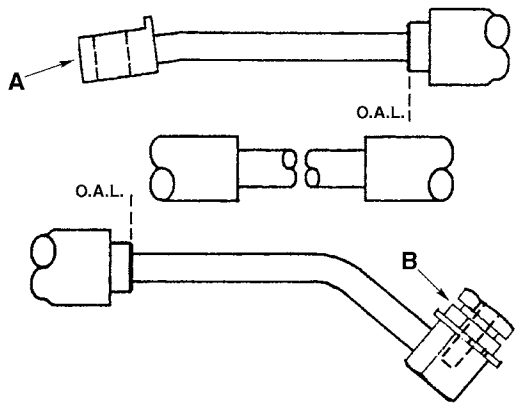

MERITOR NO.	REPLACES WAGNER NO.	FITTING SIZE A	FITTING SIZE B	FITTING SIZE C	BOLT HOLE	O.A.L.
R4510511	F120539	No Thd.	3/8"-24	—	—	19 1/4"

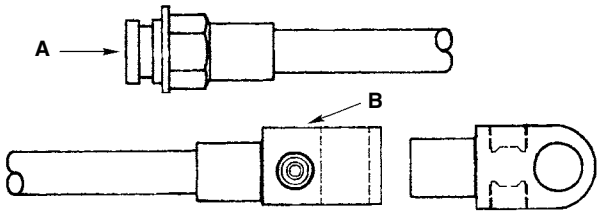

MERITOR NO.	REPLACES WAGNER NO.	FITTING SIZE A	FITTING SIZE B	FITTING SIZE C	BOLT HOLE	O.A.L.
R4510512	—	3/8"-24	3/8"-24	—	—	20"

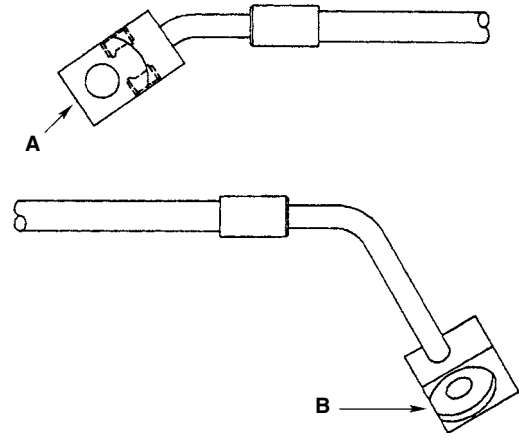

MERITOR NO.	REPLACES WAGNER NO.	FITTING SIZE A	FITTING SIZE B	FITTING SIZE C	BOLT HOLE	O.A.L.
R4510514	F120872	3/8"-24	No Thd.	—	—	21 1/2"

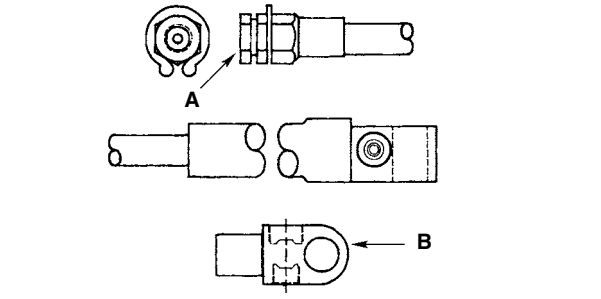

MERITOR NO.	REPLACES WAGNER NO.	FITTING SIZE A	FITTING SIZE B	FITTING SIZE C	BOLT HOLE	O.A.L.
R4510515	—	3/8"-24	3/8"-24	—	—	20 1/8"

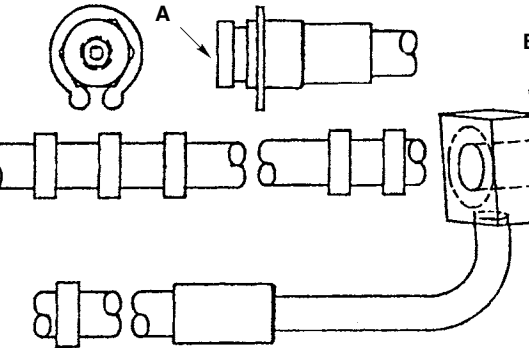

MERITOR NO.	REPLACES WAGNER NO.	FITTING SIZE A	FITTING SIZE B	FITTING SIZE C	BOLT HOLE	O.A.L.
R4510516	F120518	3/8"-24	No Thd.	—	—	14 7/8"

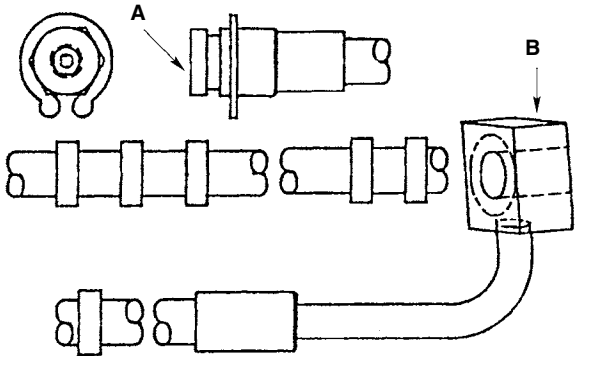

MERITOR NO.	REPLACES WAGNER NO.	FITTING SIZE A	FITTING SIZE B	FITTING SIZE C	BOLT HOLE	O.A.L.
R4510517	F120519	3/8"-24	No Thd.	—	—	14 7/8"

HYDRAULIC BRAKE HOSES

Listed in Meritor Part Number Sequence

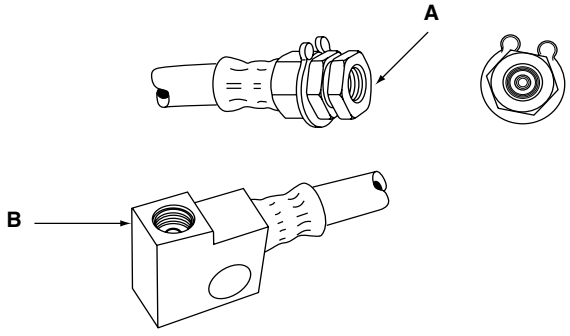

MERITOR NO.	REPLACES WAGNER NO.	FITTING SIZE A	FITTING SIZE B	FITTING SIZE C	BOLT HOLE	O.A.L.
R4510518	F120520	3/8"-24	3/8"-24	—	—	22 1/8"

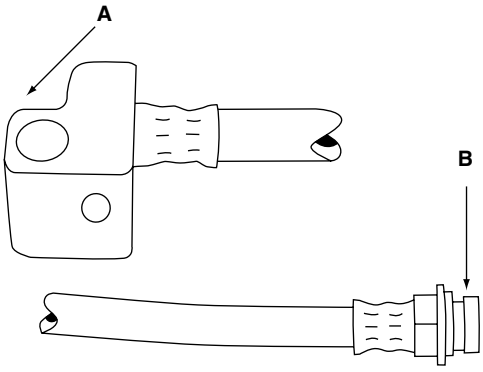

MERITOR NO.	REPLACES WAGNER NO.	FITTING SIZE A	FITTING SIZE B	FITTING SIZE C	BOLT HOLE	O.A.L.
R4510520	F128683	3/8"-24	3/8"-24	—	—	17 1/4"

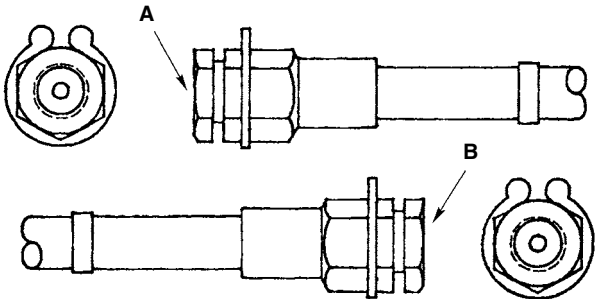

MERITOR NO.	REPLACES WAGNER NO.	FITTING SIZE A	FITTING SIZE B	FITTING SIZE C	BOLT HOLE	O.A.L.
R4510521	F116804	3/8"-24	3/8"-24	—	—	9 3/8"

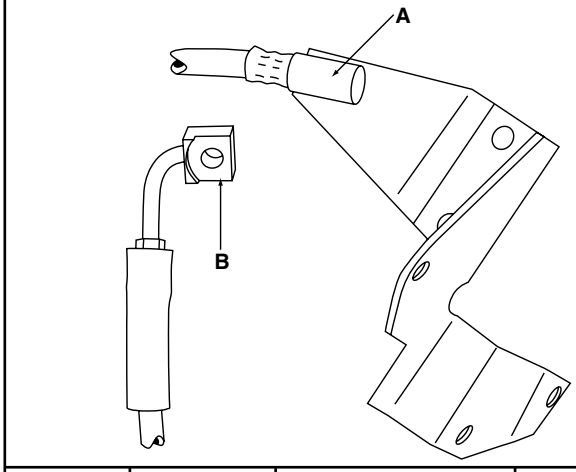

MERITOR NO.	REPLACES WAGNER NO.	FITTING SIZE A	FITTING SIZE B	FITTING SIZE C	BOLT HOLE	O.A.L.
R4510525	F124719	3/8"-24	No Thd.	—	—	19 7/8"

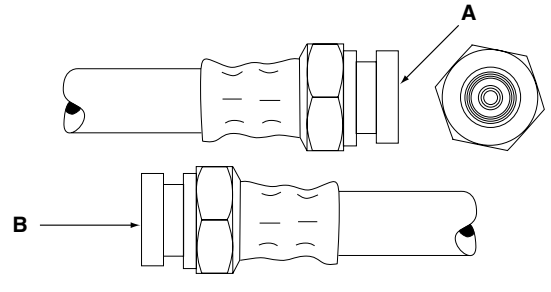

MERITOR NO.	REPLACES WAGNER NO.	FITTING SIZE A	FITTING SIZE B	FITTING SIZE C	BOLT HOLE	O.A.L.
R4510528	F123791	M10x1	M10x1	—	—	17 3/4"

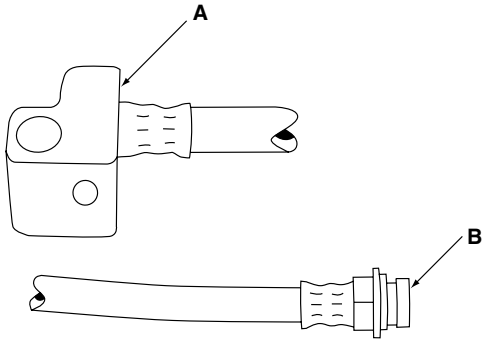

MERITOR NO.	REPLACES WAGNER NO.	FITTING SIZE A	FITTING SIZE B	FITTING SIZE C	BOLT HOLE	O.A.L.
R4510530	F124814	3/8"-24	3/8"-24	—	—	18 1/8"

HYDRAULIC BRAKE HOSES

Listed in Meritor Part Number Sequence

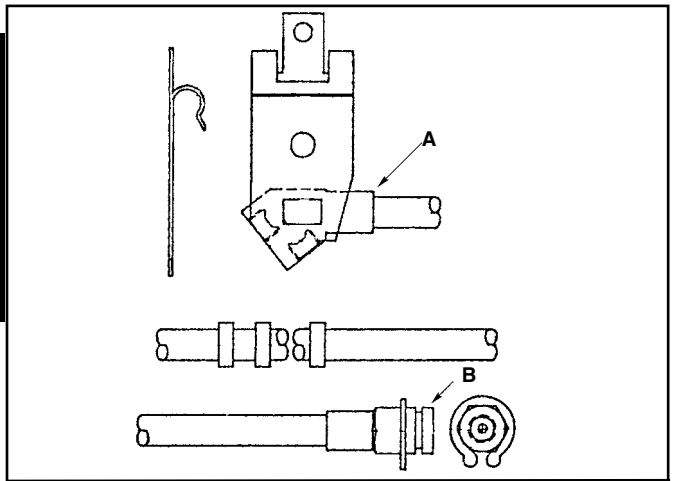

MERITOR NO.	REPLACES WAGNER NO.	FITTING SIZE A	FITTING SIZE B	FITTING SIZE C	BOLT HOLE	O.A.L.
R4510532	F120537 F123292	3/8"-24	3/8"-24	—	—	19 5/8"

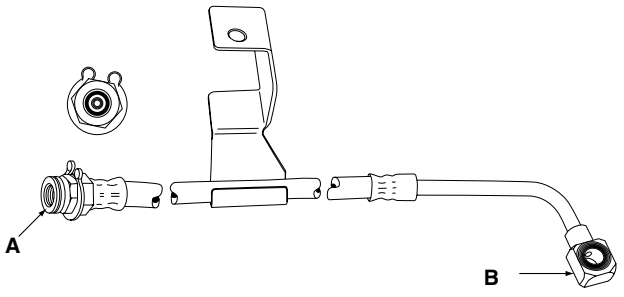

MERITOR NO.	REPLACES WAGNER NO.	FITTING SIZE A	FITTING SIZE B	FITTING SIZE C	BOLT HOLE	O.A.L.
R4510534	F123306	3/8"-24	No Thd.	—	—	24 11/16"

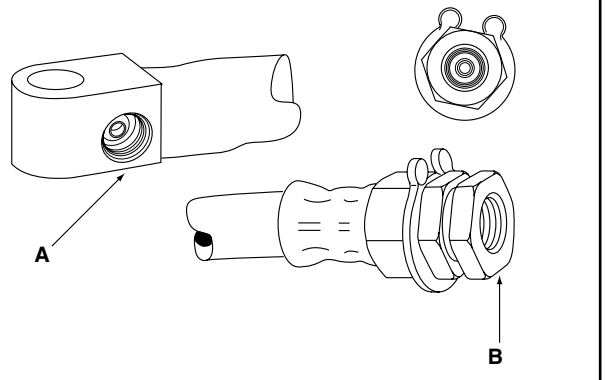

MERITOR NO.	REPLACES WAGNER NO.	FITTING SIZE A	FITTING SIZE B	FITTING SIZE C	BOLT HOLE	O.A.L.
R4510537	F124595	No Thd.	3/8"-24	—	—	21 1/2"

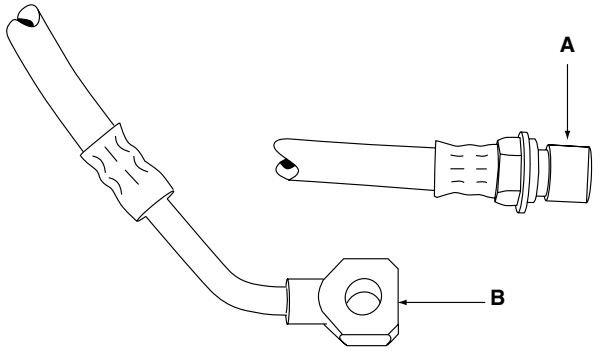

MERITOR NO.	REPLACES WAGNER NO.	FITTING SIZE A	FITTING SIZE B	FITTING SIZE C	BOLT HOLE	O.A.L.
R4510538	F124597	M12x1	No Thd.	—	—	21 7/8"

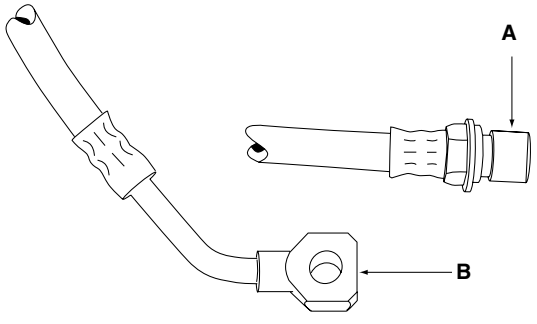

MERITOR NO.	REPLACES WAGNER NO.	FITTING SIZE A	FITTING SIZE B	FITTING SIZE C	BOLT HOLE	O.A.L.
R4510539	F124598	3/8"-24	No Thd.	—	—	21 7/8"

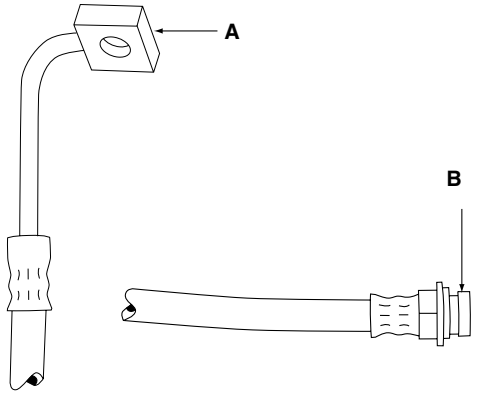

MERITOR NO.	REPLACES WAGNER NO.	FITTING SIZE A	FITTING SIZE B	FITTING SIZE C	BOLT HOLE	O.A.L.
R4510545	F124759	No Thd.	3/8"-24	—	—	29 1/2"

HYDRAULIC BRAKE HOSES

Listed in Meritor Part Number Sequence

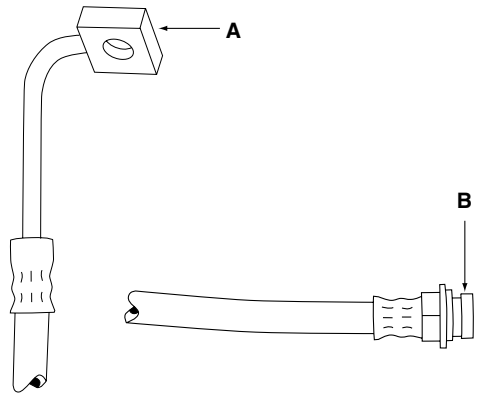

MERITOR NO.	REPLACES WAGNER NO.	FITTING SIZE			BOLT HOLE	O.A.L.
		A	B	C		
R4510546	F124758	No Thd.	3/8"-24	—	—	29 1/2"

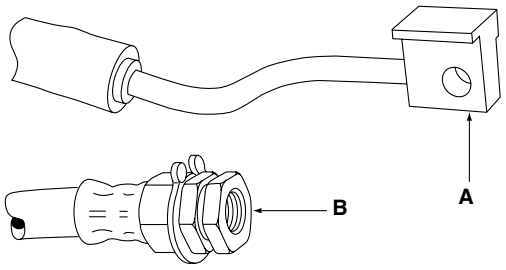

MERITOR NO.	REPLACES WAGNER NO.	FITTING SIZE			BOLT HOLE	O.A.L.
		A	B	C		
R4510549	F124725	No Thd.	3/8"-24	—	—	20 7/8"

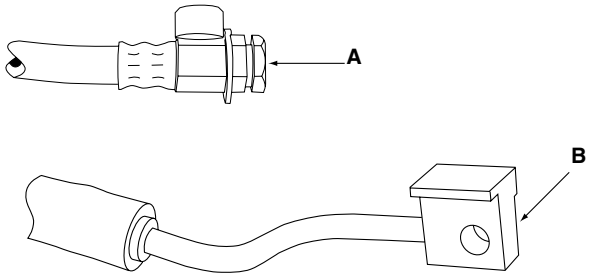

MERITOR NO.	REPLACES WAGNER NO.	FITTING SIZE			BOLT HOLE	O.A.L.
		A	B	C		
R4510550	F124724	3/8"-24	No Thd.	—	—	20 7/8"

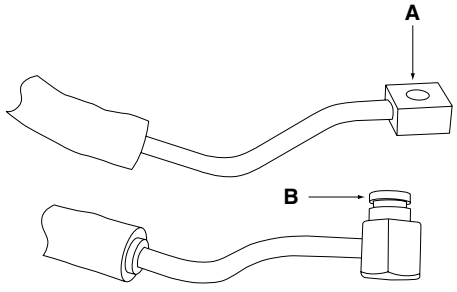

MERITOR NO.	REPLACES WAGNER NO.	FITTING SIZE			BOLT HOLE	O.A.L.
		A	B	C		
R4510552	F124740	No Thd.	3/8"-24	—	—	20 1/4"

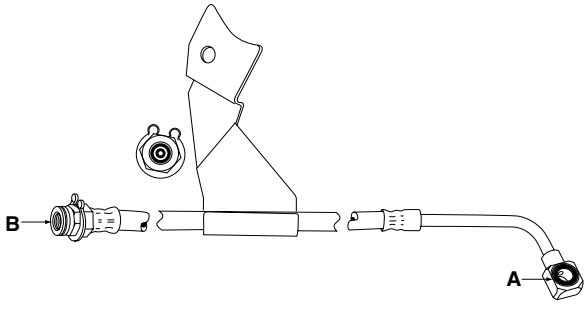

MERITOR NO.	REPLACES WAGNER NO.	FITTING SIZE			BOLT HOLE	O.A.L.
		A	B	C		
R4510553	F124739	No Thd.	3/8"-24	—	—	20 1/4"

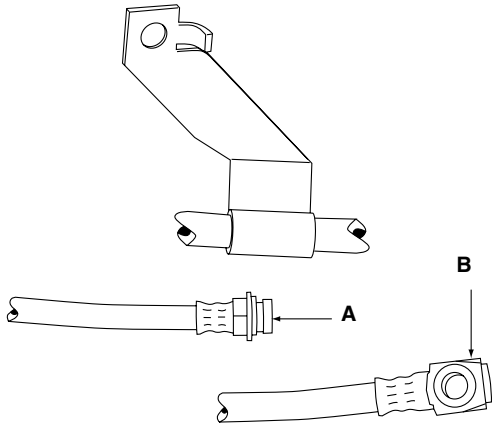

MERITOR NO.	REPLACES WAGNER NO.	FITTING SIZE			BOLT HOLE	O.A.L.
		A	B	C		
R4510563	F128695	—	—	—	—	13"

HYDRAULIC BRAKE HOSES

Listed in Meritor Part Number Sequence

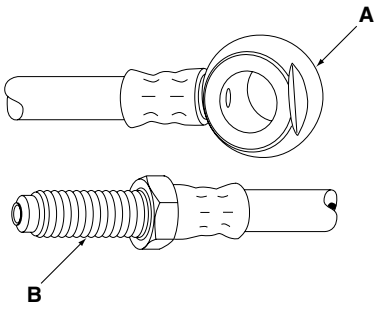

MERITOR NO.	REPLACES WAGNER NO.	FITTING SIZE A	FITTING SIZE B	FITTING SIZE C	BOLT HOLE	O.A.L.
R4510558	F126758	No Thd.	12mm x 1.5	—	—	21 1/8"

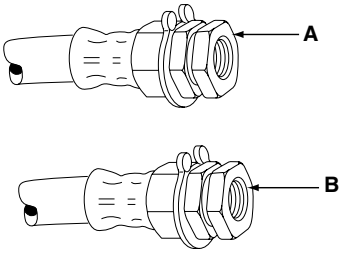

MERITOR NO.	REPLACES WAGNER NO.	FITTING SIZE A	FITTING SIZE B	FITTING SIZE C	BOLT HOLE	O.A.L.
R4510565	F130685	—	—	—	—	22 1/2"

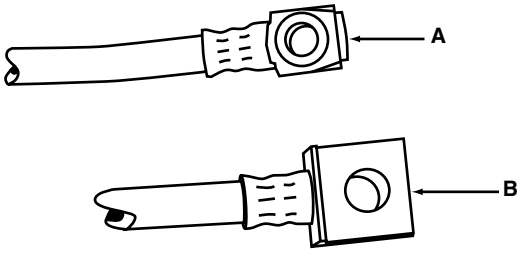

MERITOR NO.	REPLACES WAGNER NO.	FITTING SIZE A	FITTING SIZE B	FITTING SIZE C	BOLT HOLE	O.A.L.
R4510567	F126774	3/8"-24	No Thd.	—	—	17 1/2"

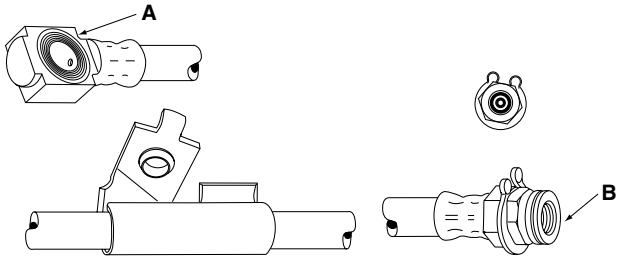

MERITOR NO.	REPLACES WAGNER NO.	FITTING SIZE A	FITTING SIZE B	FITTING SIZE C	BOLT HOLE	O.A.L.
R4510564	F128694	—	—	—	—	26 1/4"

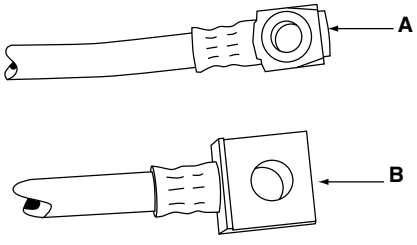

MERITOR NO.	REPLACES WAGNER NO.	FITTING SIZE A	FITTING SIZE B	FITTING SIZE C	BOLT HOLE	O.A.L.
R4510566	F126775	3/8"-24	No Thd.	—	—	23"

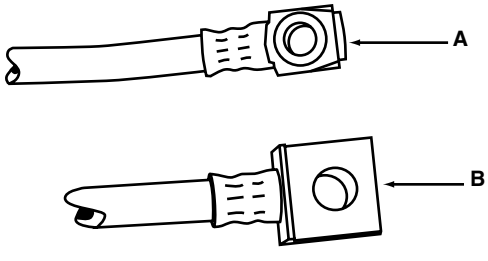

MERITOR NO.	REPLACES WAGNER NO.	FITTING SIZE A	FITTING SIZE B	FITTING SIZE C	BOLT HOLE	O.A.L.
R4510568	F130315	3/8"-24	No Thd.	—	—	21 3/4"

HYDRAULIC BRAKE HOSES

Listed in Meritor Part Number Sequence

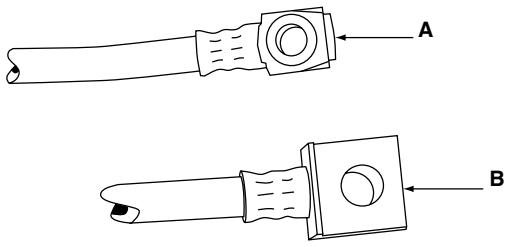

MERITOR NO.	REPLACES WAGNER NO.	FITTING SIZE A	FITTING SIZE B	FITTING SIZE C	BOLT HOLE	O.A.L.
R4510569	F130314	3/8"-24	3/8"-24	—	—	18 1/2"

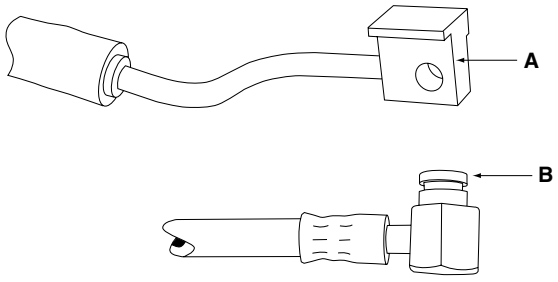

MERITOR NO.	REPLACES WAGNER NO.	FITTING SIZE A	FITTING SIZE B	FITTING SIZE C	BOLT HOLE	O.A.L.
R4510571	F130428	No Thd.	3/8"-24	—	—	20"

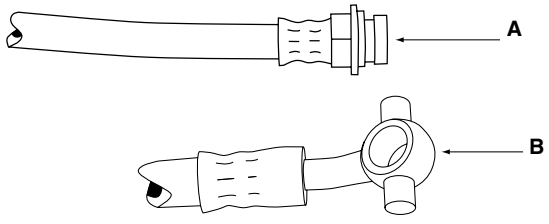

MERITOR NO.	REPLACES WAGNER NO.	FITTING SIZE A	FITTING SIZE B	FITTING SIZE C	BOLT HOLE	O.A.L.
R4510573	F130326	—	—	—	—	10 1/4"

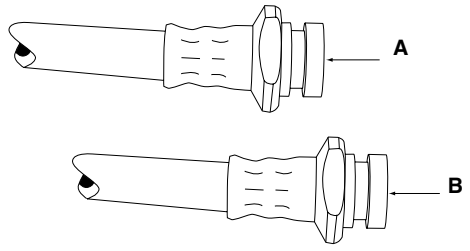

MERITOR NO.	REPLACES WAGNER NO.	FITTING SIZE A	FITTING SIZE B	FITTING SIZE C	BOLT HOLE	O.A.L.
R4510574	F130327	M10 x1	M10 x 1	—	—	22"

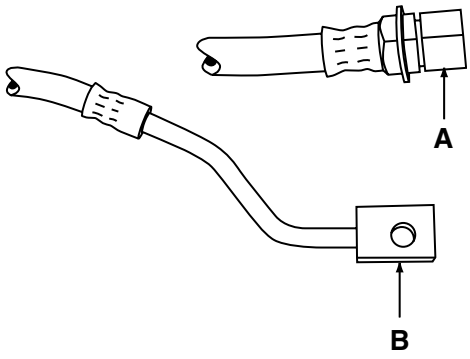

MERITOR NO.	REPLACES WAGNER NO.	FITTING SIZE A	FITTING SIZE B	FITTING SIZE C	BOLT HOLE	O.A.L.
R4510582	F80962	10mm x 1	No Thd.	—	—	29 1/8"

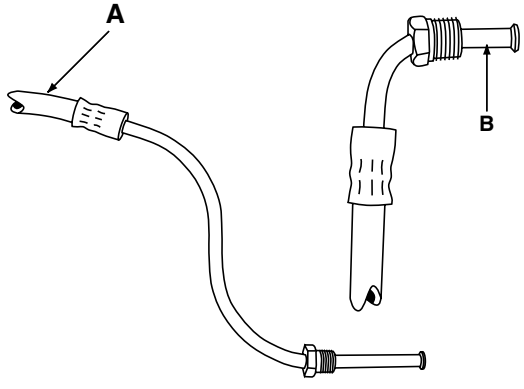

MERITOR NO.	REPLACES WAGNER NO.	FITTING SIZE A	FITTING SIZE B	FITTING SIZE C	BOLT HOLE	O.A.L.
R4510589	—	9/16"-18	7/16"-24	—	—	11"

HYDRAULIC BRAKE HOSES

Listed in Meritor Part Number Sequence

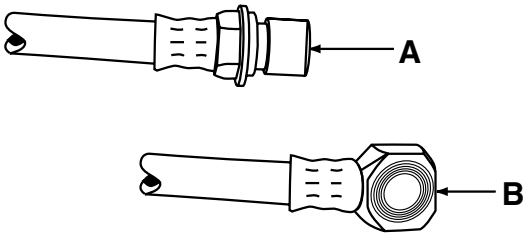

MERITOR NO.	REPLACES WAGNER NO.	FITTING SIZE A	FITTING SIZE B	FITTING SIZE C	BOLT HOLE	O.A.L.
R4510583	F124596 F132325	3/8"-24	No Thd.	—	—	36 3/4"

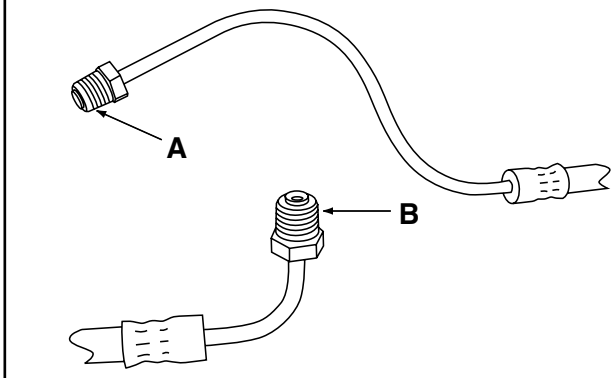

MERITOR NO.	REPLACES WAGNER NO.	FITTING SIZE A	FITTING SIZE B	FITTING SIZE C	BOLT HOLE	O.A.L.
R4510584	—	1/2"-20	1/2"-20	—	—	11 3/4"

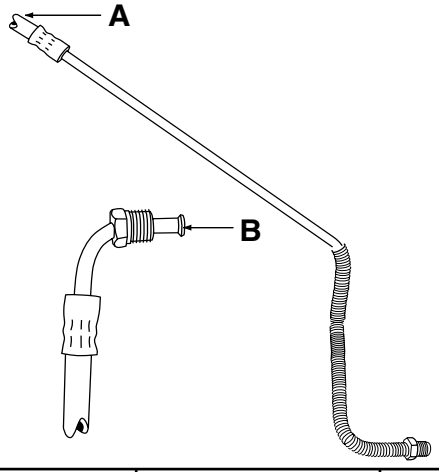

MERITOR NO.	REPLACES WAGNER NO.	FITTING SIZE A	FITTING SIZE B	FITTING SIZE C	BOLT HOLE	O.A.L.
R4510585	—	3/8"-24	1/2"-20	—	—	14"

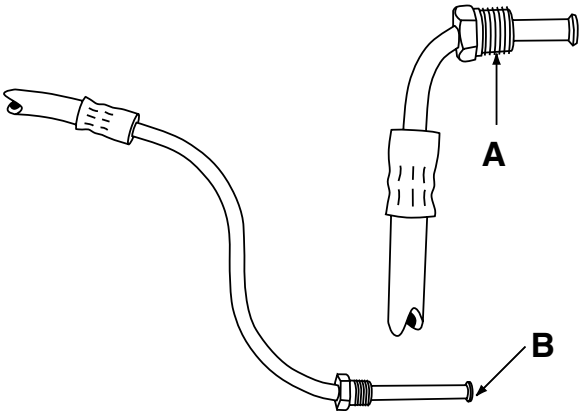

MERITOR NO.	REPLACES WAGNER NO.	FITTING SIZE A	FITTING SIZE B	FITTING SIZE C	BOLT HOLE	O.A.L.
R4510586	—	3/8"-24	1/2"-20	—	—	10 1/4"

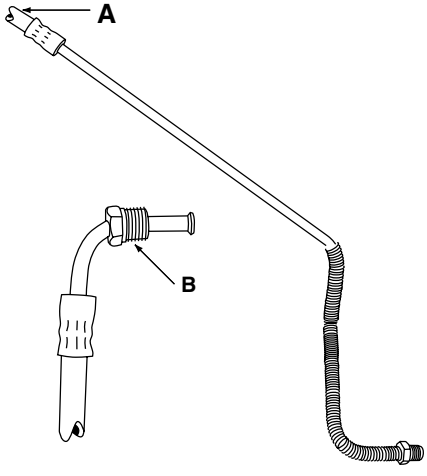

MERITOR NO.	REPLACES WAGNER NO.	FITTING SIZE A	FITTING SIZE B	FITTING SIZE C	BOLT HOLE	O.A.L.
R4510587	—	1/2"-20	1/2"-20	—	—	34"

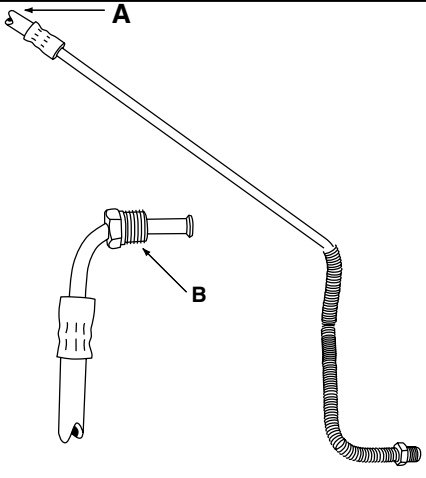

MERITOR NO.	REPLACES WAGNER NO.	FITTING SIZE A	FITTING SIZE B	FITTING SIZE C	BOLT HOLE	O.A.L.
R4510588	—	9/16"-18	7/16"-24	—	—	11"

HYDRAULIC BRAKE HOSES

Listed in Meritor Part Number Sequence

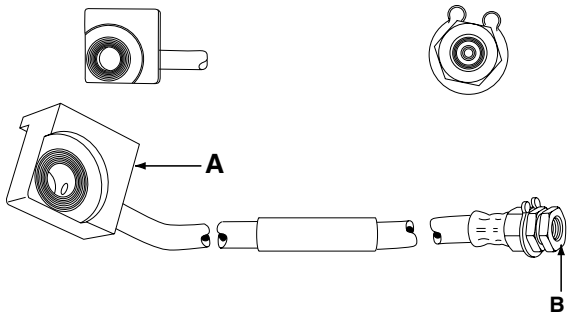

MERITOR NO.	REPLACES WAGNER NO.	FITTING SIZE A	FITTING SIZE B	FITTING SIZE C	BOLT HOLE	O.A.L.
R4510592	F132318	No Thd.	3/8"-24	—	—	18 3/8"

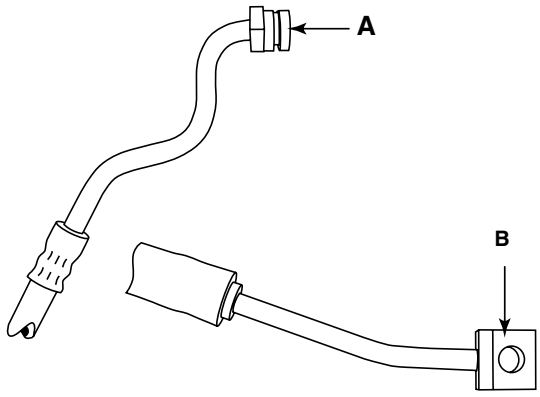

MERITOR NO.	REPLACES WAGNER NO.	FITTING SIZE A	FITTING SIZE B	FITTING SIZE C	BOLT HOLE	O.A.L.
R4510594	F30433	3/8"-24	No Thd.	—	—	21 1/2"

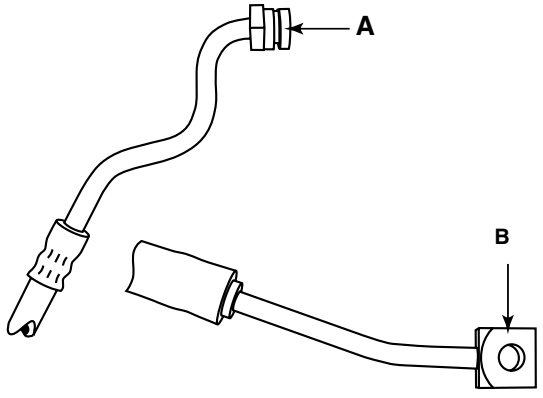

MERITOR NO.	REPLACES WAGNER NO.	FITTING SIZE A	FITTING SIZE B	FITTING SIZE C	BOLT HOLE	O.A.L.
R4510595	F130434	3/8"-24	No Thd.	—	—	24"

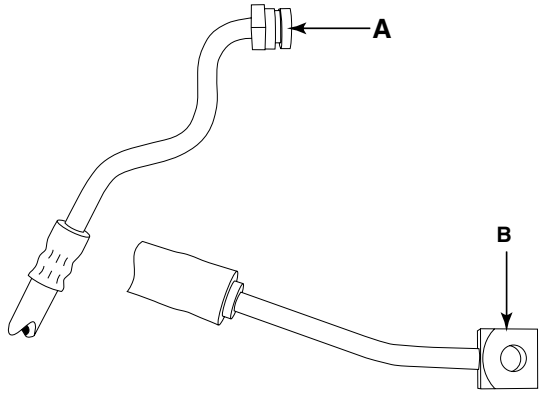

MERITOR NO.	REPLACES WAGNER NO.	FITTING SIZE A	FITTING SIZE B	FITTING SIZE C	BOLT HOLE	O.A.L.
R4510596	F130435	—	—	—	—	22 3/4"

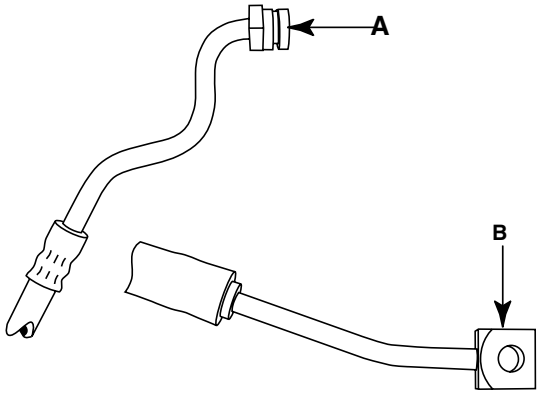

MERITOR NO.	REPLACES WAGNER NO.	FITTING SIZE A	FITTING SIZE B	FITTING SIZE C	BOLT HOLE	O.A.L.
R4510597	F130436	3/8"-24	No Thd.	—	—	20 3/4"

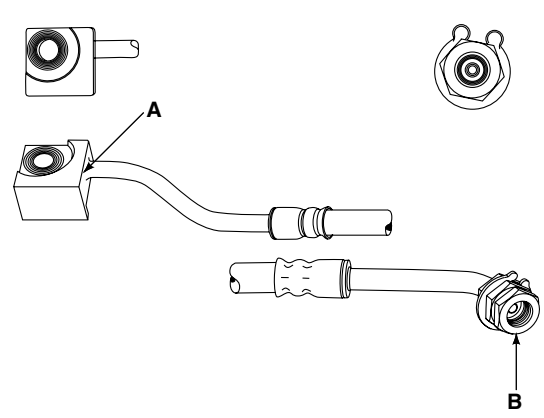

MERITOR NO.	REPLACES WAGNER NO.	FITTING SIZE A	FITTING SIZE B	FITTING SIZE C	BOLT HOLE	O.A.L.
R4510598	F132468	—	—	—	—	24 3/4"

HYDRAULIC BRAKE HOSES

Listed in Meritor Part Number Sequence

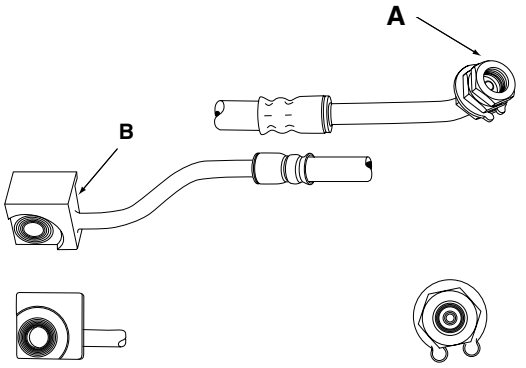

MERITOR NO.	REPLACES WAGNER NO.	FITTING SIZE A	FITTING SIZE B	FITTING SIZE C	BOLT HOLE	O.A.L.
R4510599	F132467	3/8"-24	No Thd.	—	—	24 3/4"

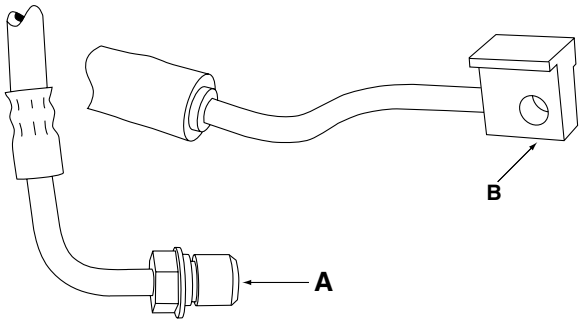

MERITOR NO.	REPLACES WAGNER NO.	FITTING SIZE A	FITTING SIZE B	FITTING SIZE C	BOLT HOLE	O.A.L.
R4510602	F132192	3/8"-24	No Thd.	—	—	24"

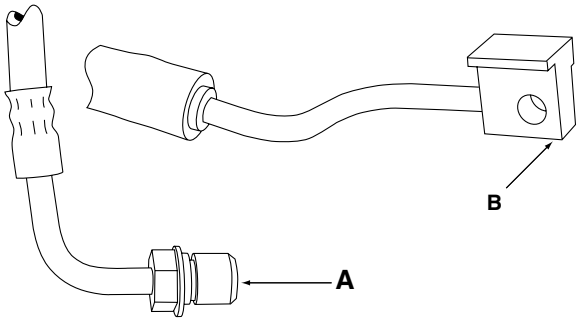

MERITOR NO.	REPLACES WAGNER NO.	FITTING SIZE A	FITTING SIZE B	FITTING SIZE C	BOLT HOLE	O.A.L.
R4510603	F132194	3/8"-24	No Thd.	—	—	24"

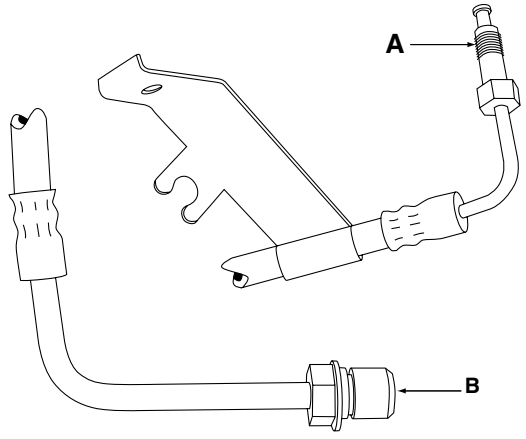

MERITOR NO.	REPLACES WAGNER NO.	FITTING SIZE A	FITTING SIZE B	FITTING SIZE C	BOLT HOLE	O.A.L.
R4510604	F132412	M10 x1	M10 x 1	—	—	20 3/4"

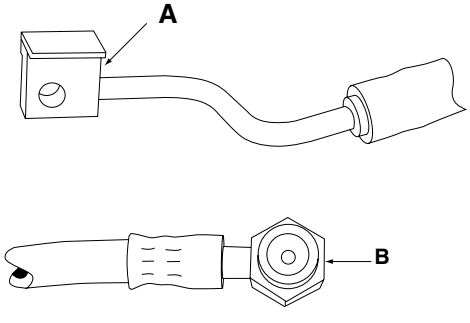

MERITOR NO.	REPLACES WAGNER NO.	FITTING SIZE A	FITTING SIZE B	FITTING SIZE C	BOLT HOLE	O.A.L.
R4510617	F132193	No Thd.	3/8"-24	—	—	18 1/2"

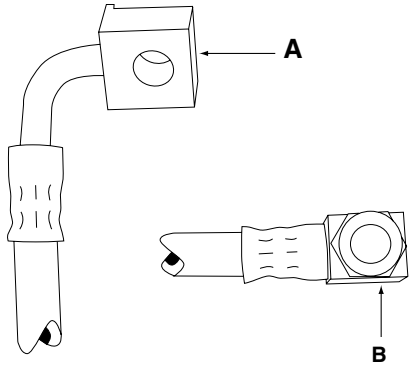

MERITOR NO.	REPLACES WAGNER NO.	FITTING SIZE A	FITTING SIZE B	FITTING SIZE C	BOLT HOLE	O.A.L.
R4510618	—	No Thd.	3/8"-24	—	—	16"

HYDRAULIC BRAKE HOSES

Listed in Meritor Part Number Sequence

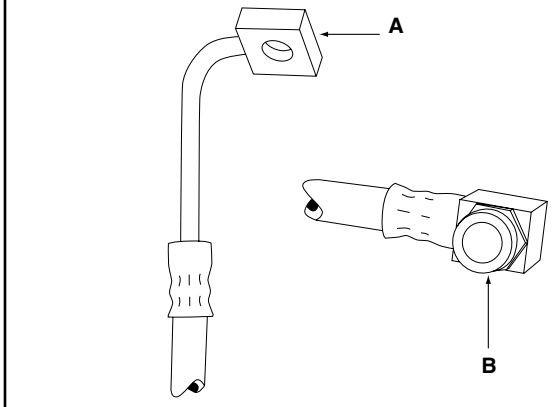

MERITOR NO.	REPLACES WAGNER NO.	FITTING SIZE A	FITTING SIZE B	FITTING SIZE C	BOLT HOLE	O.A.L.
R4510619	—	No Thd.	3/8"-24	—	—	18 1/2"

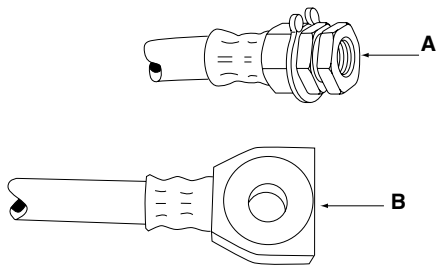

MERITOR NO.	REPLACES WAGNER NO.	FITTING SIZE A	FITTING SIZE B	FITTING SIZE C	BOLT HOLE	O.A.L.
R4510623	—	3/8"-24	No Thd.	—	—	24"

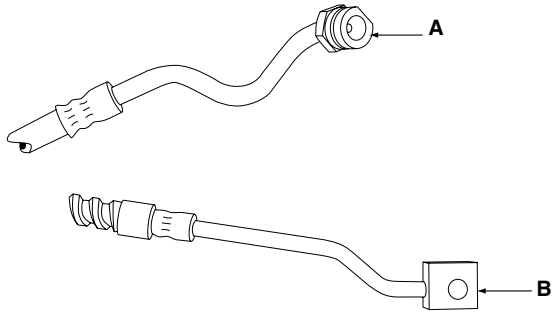

MERITOR NO.	REPLACES WAGNER NO.	FITTING SIZE A	FITTING SIZE B	FITTING SIZE C	BOLT HOLE	O.A.L.
R4510630	—	3/8"-24	No Thd.	—	—	21 1/4"

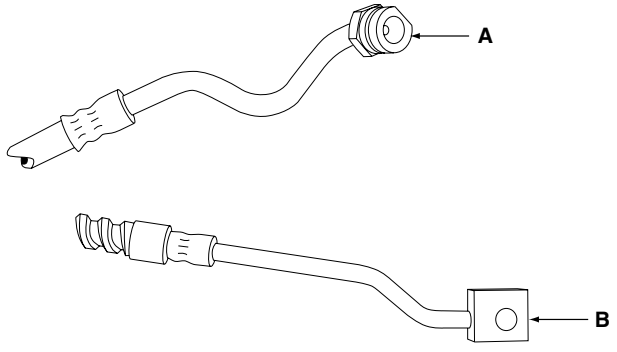

MERITOR NO.	REPLACES WAGNER NO.	FITTING SIZE A	FITTING SIZE B	FITTING SIZE C	BOLT HOLE	O.A.L.
R4510631	—	3/8"-24	No Thd.	—	—	22 3/4"

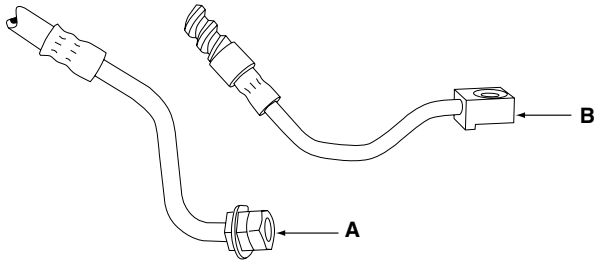

MERITOR NO.	REPLACES WAGNER NO.	FITTING SIZE A	FITTING SIZE B	FITTING SIZE C	BOLT HOLE	O.A.L.
R4510632	—	3/8"-24	No Thd.	—	—	21 1/4"

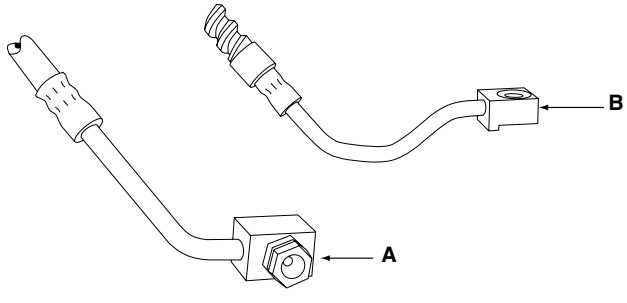

MERITOR NO.	REPLACES WAGNER NO.	FITTING SIZE A	FITTING SIZE B	FITTING SIZE C	BOLT HOLE	O.A.L.
R4510633	—	3/8"-24	No Thd.	—	—	12 1/4"

HYDRAULIC BRAKE HOSES

Listed in Meritor Part Number Sequence

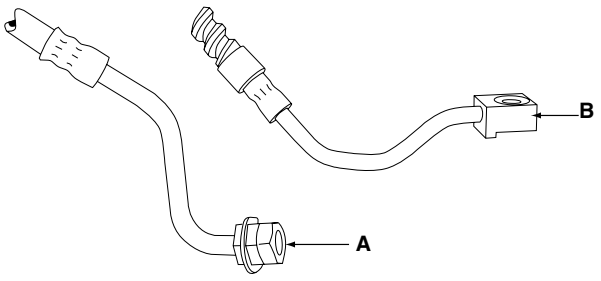

MERITOR NO.	REPLACES WAGNER NO.	FITTING SIZE A	FITTING SIZE B	FITTING SIZE C	BOLT HOLE	O.A.L.
R4510634	—	3/8"-24	No Thd.	—	—	15 1/2"

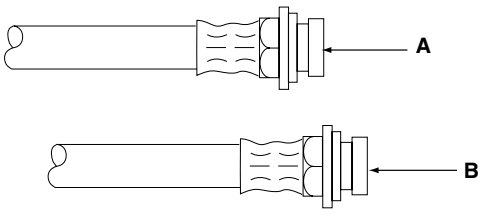

MERITOR NO.	REPLACES WAGNER NO.	FITTING SIZE A	FITTING SIZE B	FITTING SIZE C	BOLT HOLE	O.A.L.
R4510635	F132360	3/8"-24	3/8"-24	—	—	48 1/2"

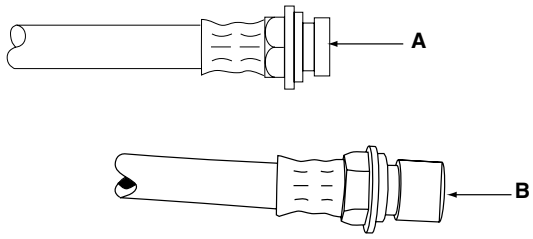

MERITOR NO.	REPLACES WAGNER NO.	FITTING SIZE A	FITTING SIZE B	FITTING SIZE C	BOLT HOLE	O.A.L.
R4510636	F132359	3/8"-24	7/16"-24	—	—	47 1/2"

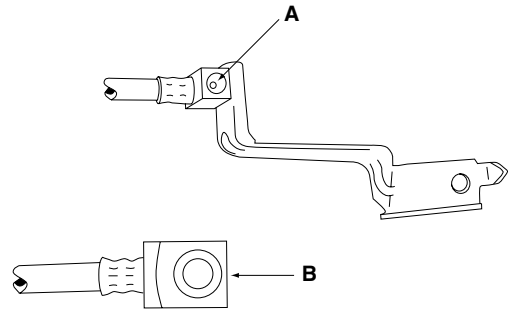

MERITOR NO.	REPLACES WAGNER NO.	FITTING SIZE A	FITTING SIZE B	FITTING SIZE C	BOLT HOLE	O.A.L.
R4510637	F132361	3/8"-24	No Thd.	—	—	11 1/2"

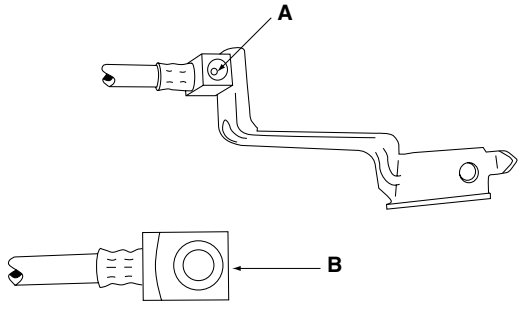

MERITOR NO.	REPLACES WAGNER NO.	FITTING SIZE A	FITTING SIZE B	FITTING SIZE C	BOLT HOLE	O.A.L.
R4510638	F132362	3/8"-24	No Thd.	—	—	12 1/2"

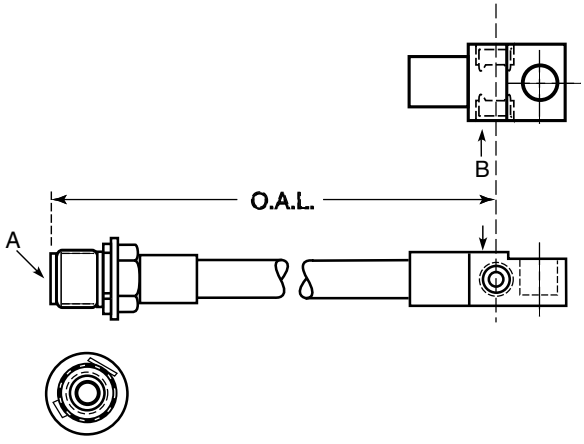

MERITOR NO.	REPLACES WAGNER NO.	FITTING SIZE A	FITTING SIZE B	FITTING SIZE C	BOLT HOLE	O.A.L.
R4510641	—	7/16"-24 Int 5/8"-18 Ext.	—	—	—	18 1/4"

HYDRAULIC BRAKE HOSES

Listed in Meritor Part Number Sequence

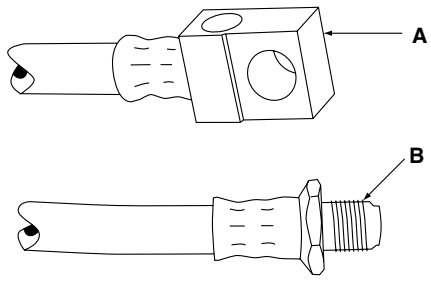

MERITOR NO.	REPLACES WAGNER NO.	FITTING SIZE A	FITTING SIZE B	FITTING SIZE C	BOLT HOLE	O.A.L.
R4510641	F123303	7/16"-24 Int. 5/8"-18 Ext.	3/8"-24	—	—	22 3/8"

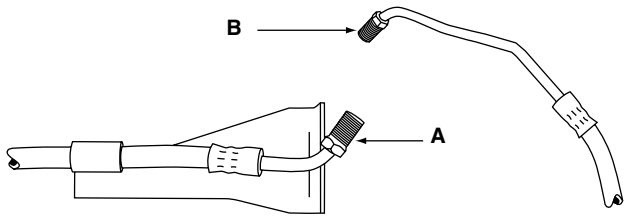

MERITOR NO.	REPLACES WAGNER NO.	FITTING SIZE A	FITTING SIZE B	FITTING SIZE C	BOLT HOLE	O.A.L.
R4510643	—	7/16"-24	7/16"-24	—	—	22 1/4"

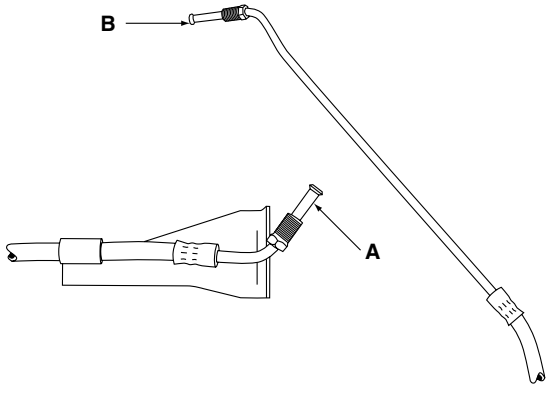

MERITOR NO.	REPLACES WAGNER NO.	FITTING SIZE A	FITTING SIZE B	FITTING SIZE C	BOLT HOLE	O.A.L.
R4510644	—	7/16"-24	7/16"-24	—	—	24 1/4"

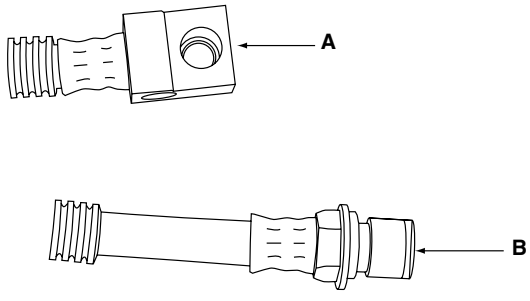

MERITOR NO.	REPLACES WAGNER NO.	FITTING SIZE A	FITTING SIZE B	FITTING SIZE C	BOLT HOLE	O.A.L.
R4510649	F133953	No Thd.	3/8"-24	—	—	15 1/8"

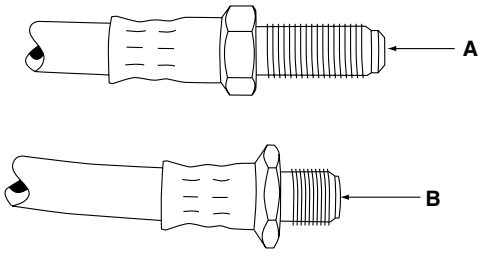

MERITOR NO.	REPLACES WAGNER NO.	FITTING SIZE A	FITTING SIZE B	FITTING SIZE C	BOLT HOLE	O.A.L.
R4510650	F86592	12mm x 1	12mm x 1	—	—	21"

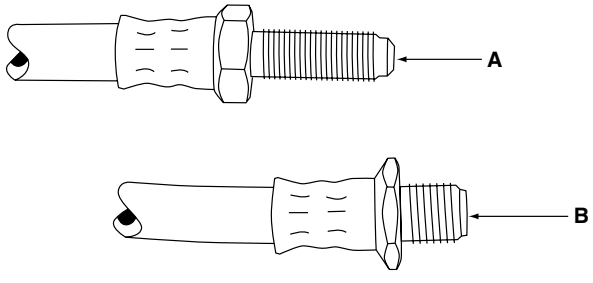

MERITOR NO.	REPLACES WAGNER NO.	FITTING SIZE A	FITTING SIZE B	FITTING SIZE C	BOLT HOLE	O.A.L.
R4510651	F128951	M10 x 1	M12 x 1	—	—	18 1/2"

HYDRAULIC BRAKE HOSES

Listed in Meritor Part Number Sequence

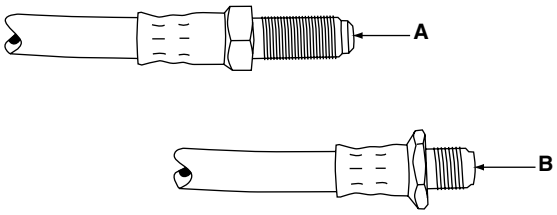

MERITOR NO.	REPLACES WAGNER NO.	FITTING SIZE A	FITTING SIZE B	FITTING SIZE C	BOLT HOLE	O.A.L.
R4510652	F128952	M12 x 1	M10 x 1	—	—	25 1/2"

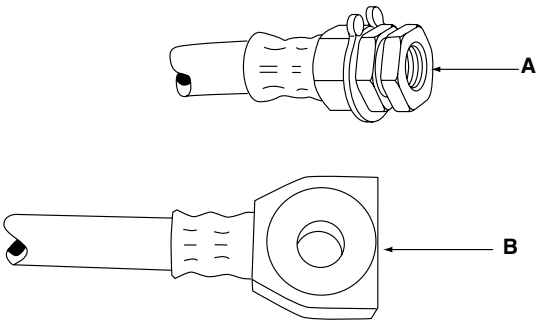

MERITOR NO.	REPLACES WAGNER NO.	FITTING SIZE A	FITTING SIZE B	FITTING SIZE C	BOLT HOLE	O.A.L.
R4510653	—	3/8"-24	No Thd.	—	—	25 1/2"

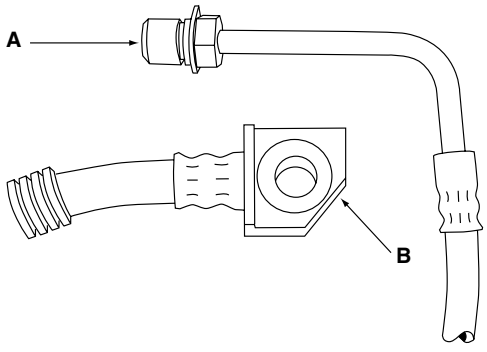

MERITOR NO.	REPLACES WAGNER NO.	FITTING SIZE A	FITTING SIZE B	FITTING SIZE C	BOLT HOLE	O.A.L.
R4510654	—	M10 x 1	No Thd.	—	—	15 1/2"

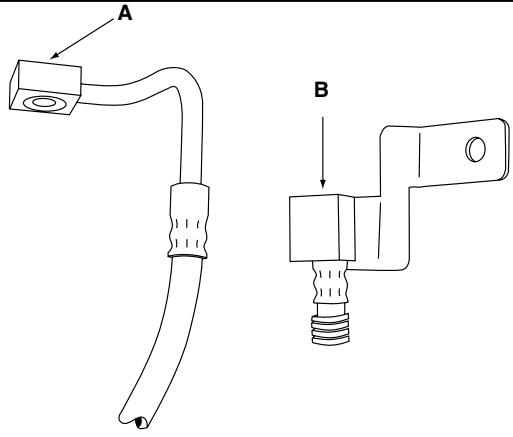

MERITOR NO.	REPLACES WAGNER NO.	FITTING SIZE A	FITTING SIZE B	FITTING SIZE C	BOLT HOLE	O.A.L.
R4510659	—	3/8"-24	No Thd.	—	—	28 1/2"

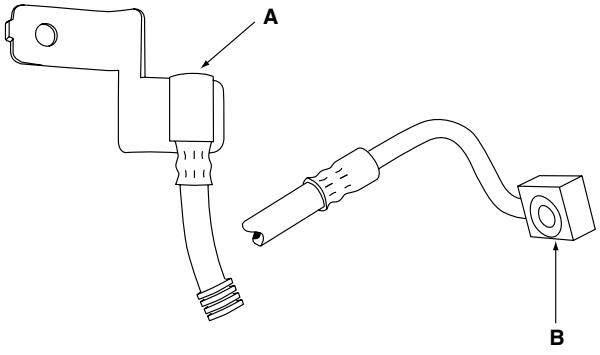

MERITOR NO.	REPLACES WAGNER NO.	FITTING SIZE A	FITTING SIZE B	FITTING SIZE C	BOLT HOLE	O.A.L.
R4510660	—	No Thd.	3/8"-24	—	—	28 1/2"

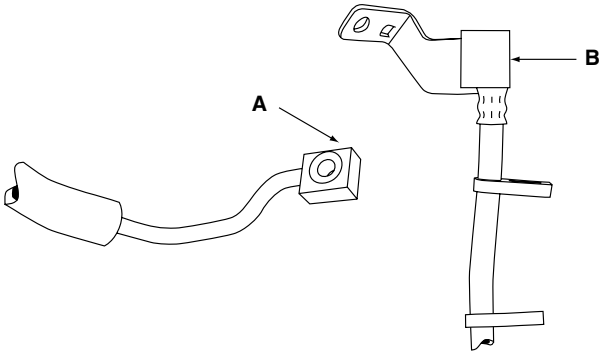

MERITOR NO.	REPLACES WAGNER NO.	FITTING SIZE A	FITTING SIZE B	FITTING SIZE C	BOLT HOLE	O.A.L.
R4510661	—	No Thd.	3/8"-24	—	—	14"

HYDRAULIC BRAKE HOSES

Listed in Meritor Part Number Sequence

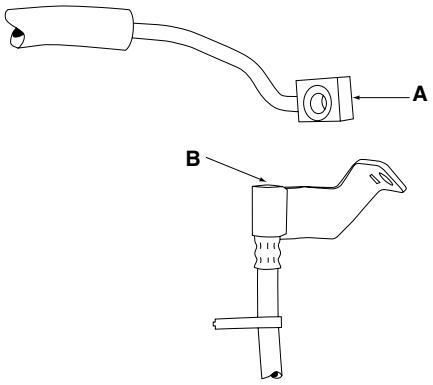

MERITOR NO.	REPLACES WAGNER NO.	FITTING SIZE A	FITTING SIZE B	FITTING SIZE C	BOLT HOLE	O.A.L.
R4510662	—	No Thd.	3/8"-24	—	—	14"

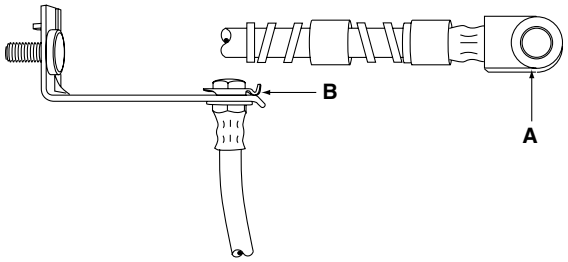

MERITOR NO.	REPLACES WAGNER NO.	FITTING SIZE A	FITTING SIZE B	FITTING SIZE C	BOLT HOLE	O.A.L.
R4510664	—	No Thd.	3/8"-24	—	—	16 1/4"

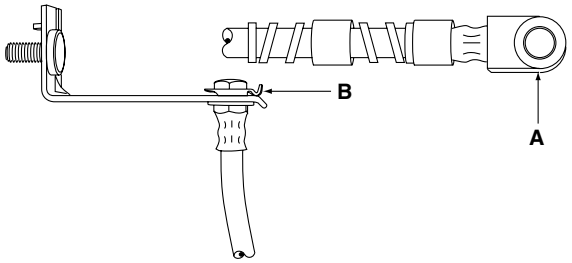

MERITOR NO.	REPLACES WAGNER NO.	FITTING SIZE A	FITTING SIZE B	FITTING SIZE C	BOLT HOLE	O.A.L.
R4510665	—	No Thd.	3/8"-24	—	—	22 1/4"

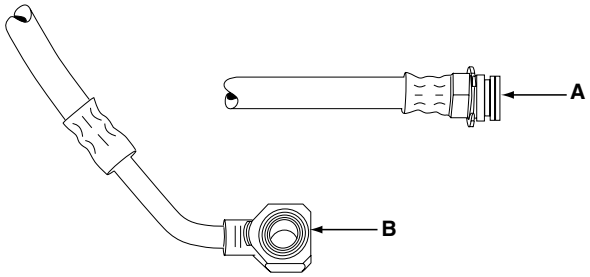

MERITOR NO.	REPLACES WAGNER NO.	FITTING SIZE A	FITTING SIZE B	FITTING SIZE C	BOLT HOLE	O.A.L.
R4510667	—	3/8"-24	No Thd.	—	—	17 1/4"

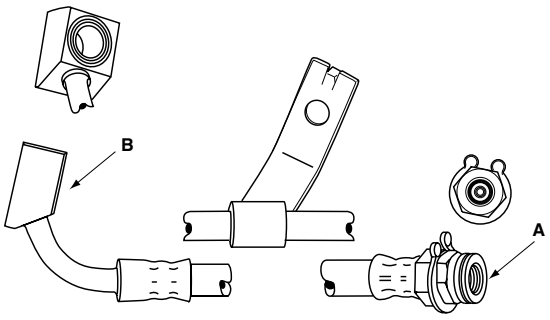

MERITOR NO.	REPLACES WAGNER NO.	FITTING SIZE A	FITTING SIZE B	FITTING SIZE C	BOLT HOLE	O.A.L.
R4511071	—	3/8"-24	No Thd.	—	—	21 1/4"

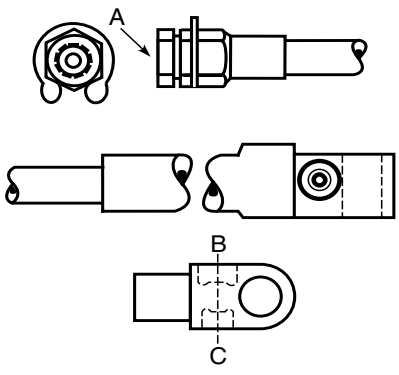

MERITOR NO.	REPLACES WAGNER NO.	FITTING SIZE A	FITTING SIZE B	FITTING SIZE C	BOLT HOLE	O.A.L.
R4511204	F119387 F120859	3/8"-24 3/8"-24	7/16"-24 No Thd.	3/8"-24 —	7/16" —	17 1/16" 21"

HYDRAULIC BRAKE HOSES

Listed in Meritor Part Number Sequence

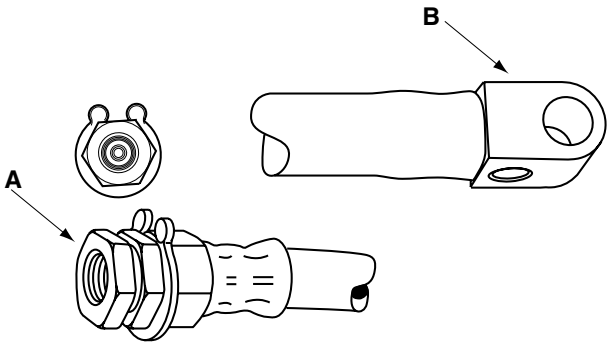

MERITOR NO.	REPLACES WAGNER NO.	FITTING SIZE A	FITTING SIZE B	FITTING SIZE C	BOLT HOLE	O.A.L.
R4511204	—	3/8"-24	No Thd.	—	—	17 51/64"

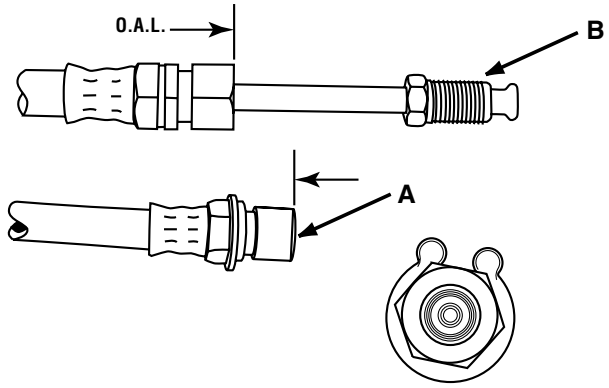

MERITOR NO.	REPLACES WAGNER NO.	FITTING SIZE A	FITTING SIZE B	FITTING SIZE C	BOLT HOLE	O.A.L.
R4511245	—	M10 x1	17MM	—	—	10.25"

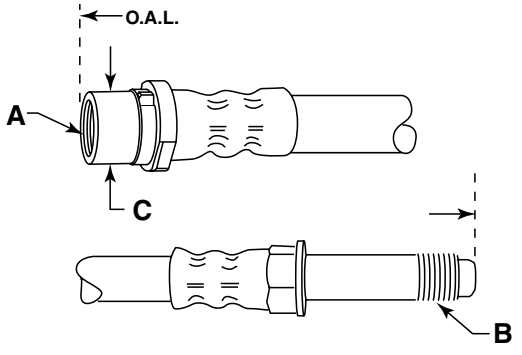

MERITOR NO.	REPLACES WAGNER NO.	FITTING SIZE A	FITTING SIZE B	FITTING SIZE C	BOLT HOLE	O.A.L.
R4512290	—	M10	M10	33/64"	—	16 11/32"

Drawing Not Available At Time of Printing

MERITOR NO.	REPLACES WAGNER NO.	FITTING SIZE A	FITTING SIZE B	FITTING SIZE C	BOLT HOLE	O.A.L.
R4511244	—	—	—	—	—	21 1/4"

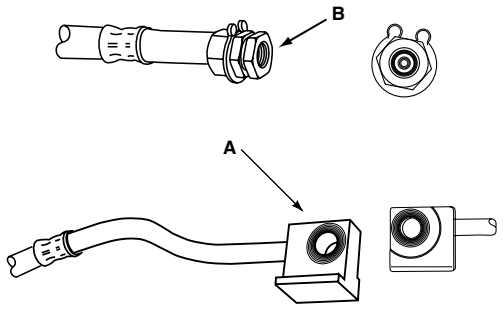

MERITOR NO.	REPLACES WAGNER NO.	FITTING SIZE A	FITTING SIZE B	FITTING SIZE C	BOLT HOLE	O.A.L.
R4511296	—	—	—	—	—	20 1/4"

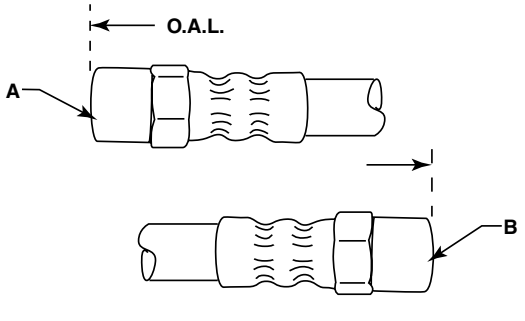

MERITOR NO.	REPLACES WAGNER NO.	FITTING SIZE A	FITTING SIZE B	FITTING SIZE C	BOLT HOLE	O.A.L.
R4512291	—	M10 x 1.1 Thd.	M10 x 1.1 Thd.	—	—	19 37/64"

HYDRAULIC BRAKE HOSES

Listed in Meritor Part Number Sequence

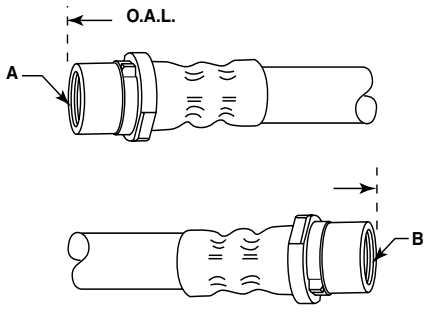

MERITOR NO.	REPLACES WAGNER NO.	FITTING SIZE A	FITTING SIZE B	FITTING SIZE C	BOLT HOLE	O.A.L.
R4512292	—	M10 x 1.1 (2x)	M10 x 1.1 (2x)	—	17/32"	15 5/8"

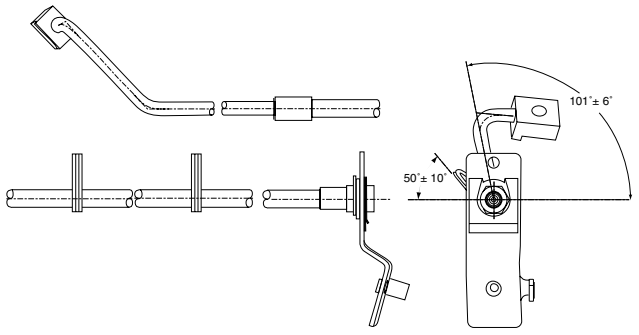

MERITOR NO.	REPLACES	FITTING SIZE A	FITTING SIZE B	FITTING SIZE C	BOLT HOLE	O.A.L.
R4512419	381262A	—	3/8"-24 Thd.	—	.382 .378	18.42 ± 1.2

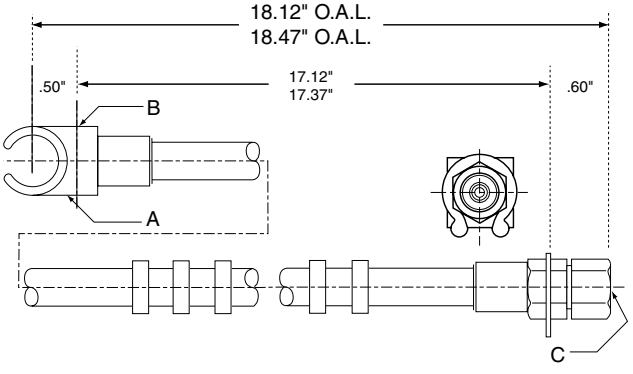

MERITOR NO.	REPLACES FEBI NO.	FITTING SIZE A	FITTING SIZE B	FITTING SIZE C	BOLT HOLE	O.A.L.
R4512421	381168	7/16"-24 UNS-2B Thd.	3/8"-24 UNF-2B Thd.	7/16"-24 UNS-2B Thd.	.61	17.12" 17.37"

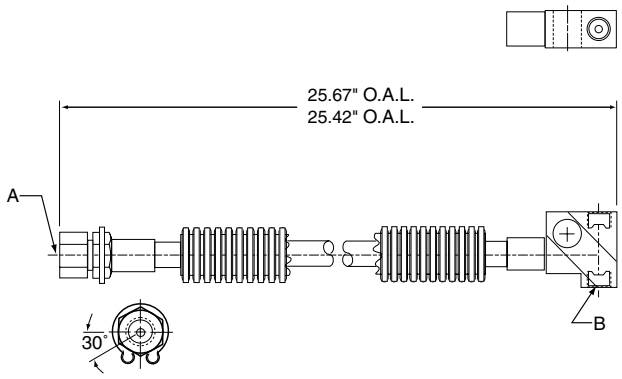

MERITOR NO.	REPLACES FEBI NO.	FITTING SIZE A	FITTING SIZE B	FITTING SIZE C	BOLT HOLE	O.A.L.
R4512400	381514	M12 x 1.0 Thd.	M11 x 1.5 Thd (2 plcs)	—	—	25.67" 25.42"

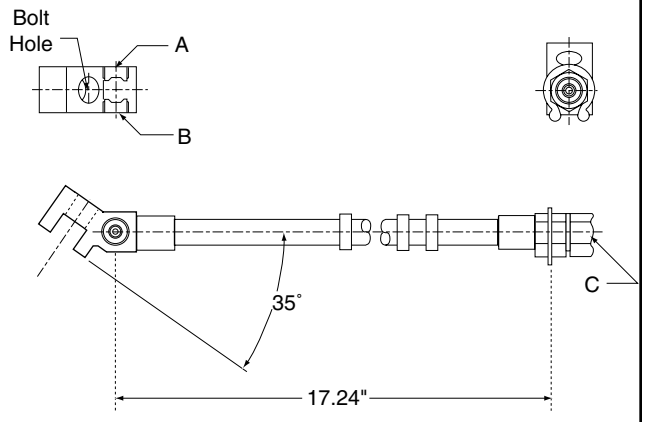

MERITOR NO.	REPLACES	FITTING SIZE A	FITTING SIZE B	FITTING SIZE C	BOLT HOLE	O.A.L.
R4512420	381166	3/8"-24 Thd.	7/16"-24 Thd.	7/16"-24 Thd.	.614	17.24"

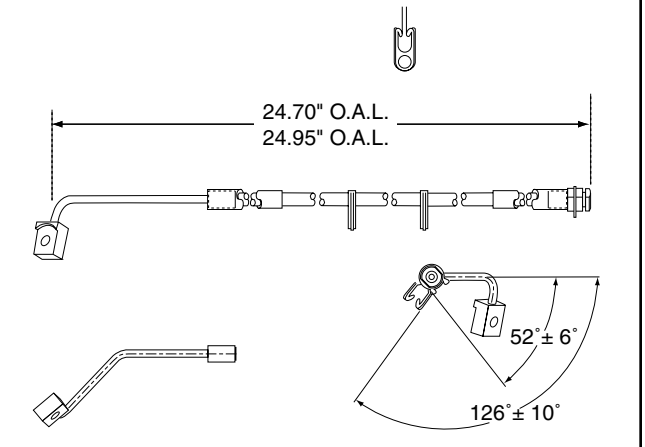

MERITOR NO.	REPLACES FEBI NO.	FITTING SIZE A	FITTING SIZE B	FITTING SIZE C	BOLT HOLE	O.A.L.
R4512427	381145A	—	3/8"-24 Thd.	—	—	24.70" 24.95"

HYDRAULIC BRAKE HOSES

Listed in Meritor Part Number Sequence

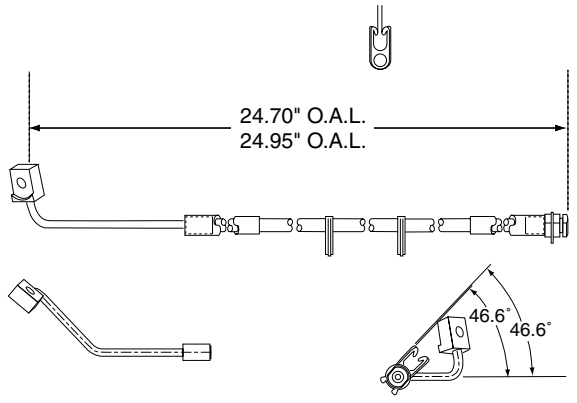

MERITOR NO.	REPLACES FEBI NO.	FITTING SIZE A	FITTING SIZE B	FITTING SIZE C	BOLT HOLE	O.A.L.
R4512428	381146A	—	3/8"-24 Thd	—	—	24.70" 24.95"

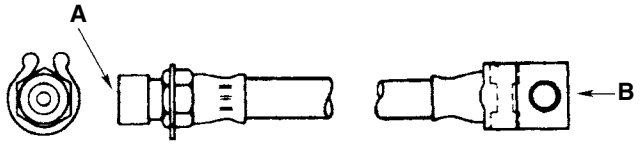

MERITOR NO.	REPLACES WAGNER NO.	FITTING SIZE A	FITTING SIZE B	FITTING SIZE C	BOLT HOLE	O.A.L.
R4577010	F80020 F86560 F88960 F97651	7/16"-24	3/8"-24	—	—	18 1/4"

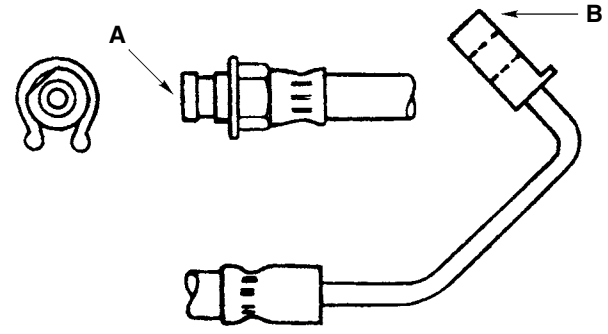

MERITOR NO.	REPLACES WAGNER NO.	FITTING SIZE A	FITTING SIZE B	FITTING SIZE C	BOLT HOLE	O.A.L.
R4577078	F102474	M10x1	M10x1	—	—	18"

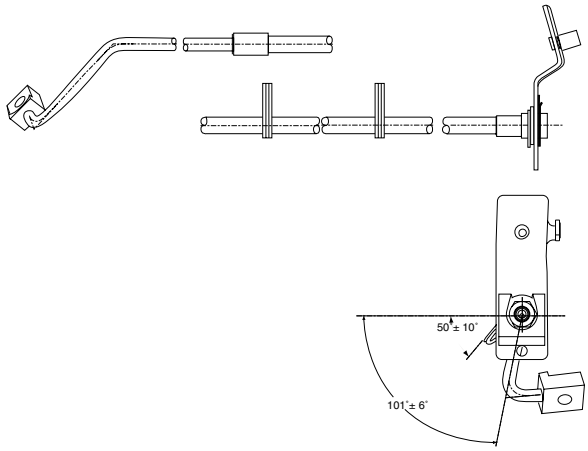

MERITOR NO.	REPLACES WAGNER NO.	FITTING SIZE A	FITTING SIZE B	FITTING SIZE C	BOLT HOLE	O.A.L.
R4512430	381263A	—	3/8"-24 Thd.	—	—	18.42 ± .12

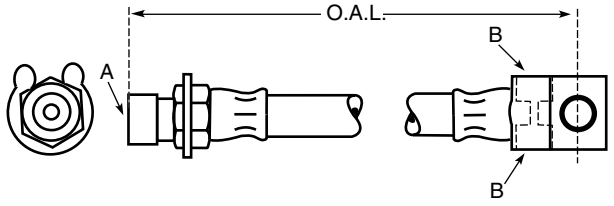

MERITOR NO.	REPLACES WAGNER NO.	FITTING SIZE A	FITTING SIZE B	FITTING SIZE C	BOLT HOLE	O.A.L.
R4577019	F86560	7/16"-24	3/8"-24	—	5/16"	18 3/8"

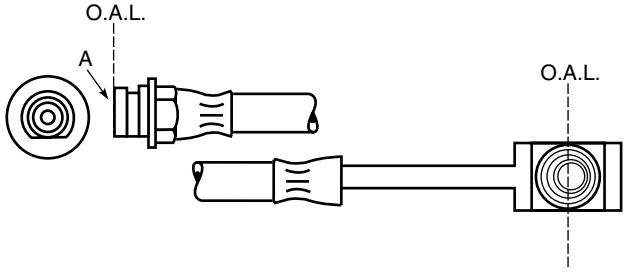

MERITOR NO.	REPLACES WAGNER NO.	FITTING SIZE A	FITTING SIZE B	FITTING SIZE C	BOLT HOLE	O.A.L.
R4577080	F80977	3/8"-24	—	—	3/8"	18 1/4"

HYDRAULIC BRAKE HOSES

Listed in Meritor Part Number Sequence

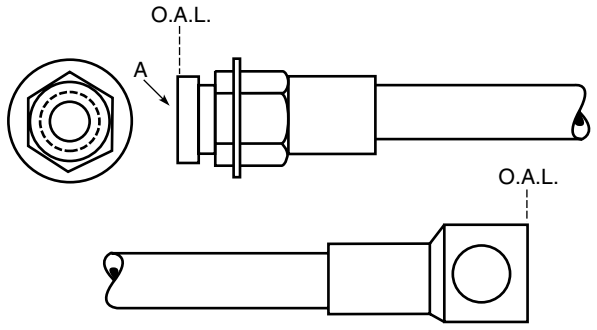

MERITOR NO.	REPLACES WAGNER NO.	FITTING SIZE A	FITTING SIZE B	FITTING SIZE C	BOLT HOLE	O.A.L.
R4577024	F97661	3/8"-24	—	—	7/16"	9 3/4"

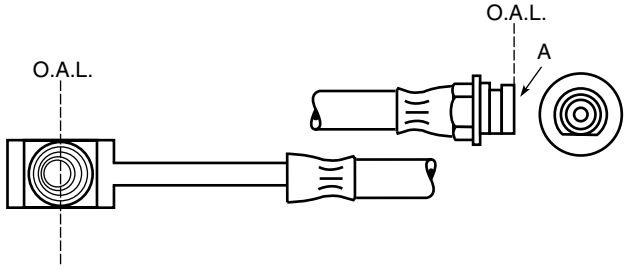

MERITOR NO.	REPLACES WAGNER NO.	FITTING SIZE A	FITTING SIZE B	FITTING SIZE C	BOLT HOLE	O.A.L.
R4577083	F80976	3/8"-24	—	—	3/8"	18 1/4"

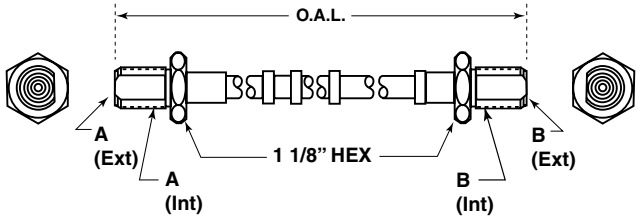

MERITOR NO.	REPLACES WAGNER NO.	FITTING SIZE A	FITTING SIZE B	BOLT HOLE	O.A.L.
R4577135	—	7/16"-24 UNS-2B (Ext) 3/4"-16 UNF-2A (Int)	3/4"-24 UNS-2B (Ext) 3/4"-16 UNF-2A (Int)	—	25 1/32" 25 9/32"

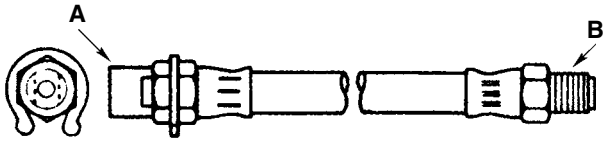

MERITOR NO.	REPLACES WAGNER NO.	FITTING SIZE A	FITTING SIZE B	FITTING SIZE C	BOLT HOLE	O.A.L.
R4577147	F71344 F80023 F86582	7/16"-24	7/16"-20	—	—	21 3/16"

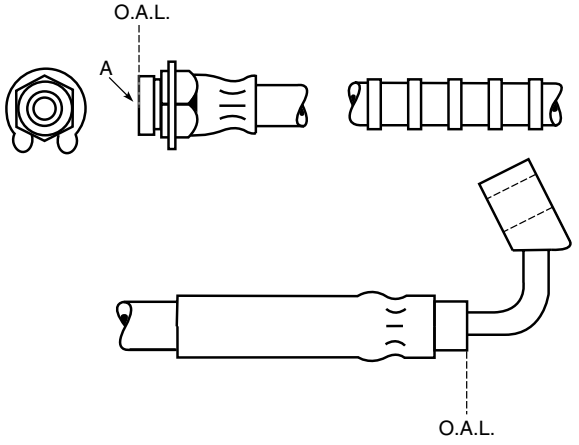

MERITOR NO.	REPLACES WAGNER NO.	FITTING SIZE A	FITTING SIZE B	FITTING SIZE C	BOLT HOLE	O.A.L.
R4577169	F106669	3/8"-24	—	—	7/16"	14 3/8"

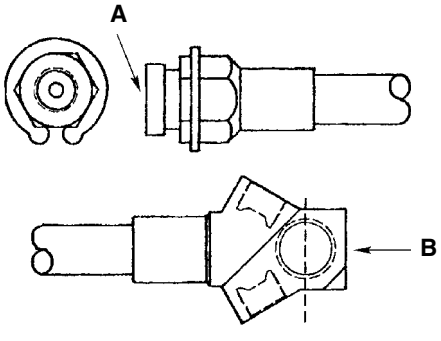

MERITOR NO.	REPLACES WAGNER NO.	FITTING SIZE A	FITTING SIZE B	FITTING SIZE C	BOLT HOLE	O.A.L.
R4577171	F113877	3/8"-24	3/8"-24	—	—	13 1/4"

HYDRAULIC BRAKE HOSES

Listed in Meritor Part Number Sequence

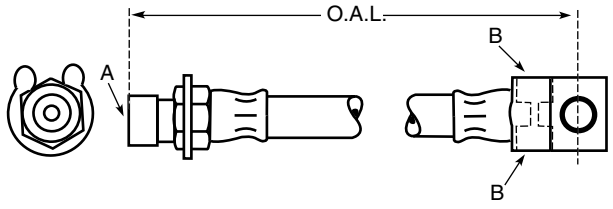

MERITOR NO.	REPLACES WAGNER NO.	FITTING SIZE A	FITTING SIZE B	FITTING SIZE C	BOLT HOLE	O.A.L.
R4577185	F106342	7/16"-24	3/8"-24	—	5/16"	10 11/16"

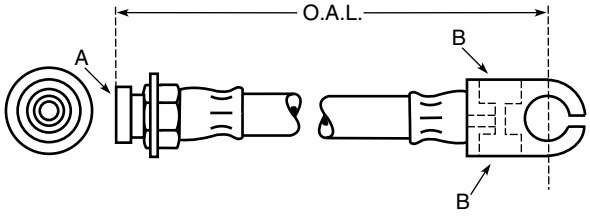

MERITOR NO.	REPLACES WAGNER NO.	FITTING SIZE A	FITTING SIZE B	FITTING SIZE C	BOLT HOLE	O.A.L.
R4577189	F98946	3/8"-24	3/8"-24	—	7/16"	19 9/16"

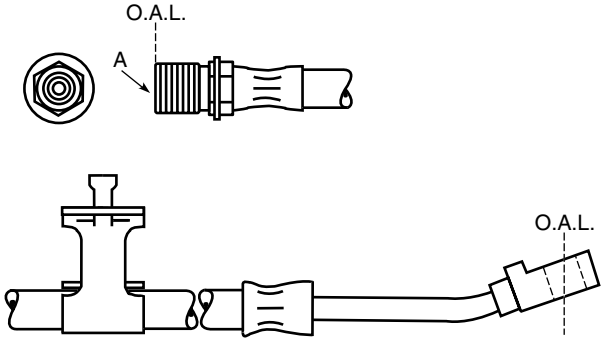

MERITOR NO.	REPLACES WAGNER NO.	FITTING SIZE A	FITTING SIZE B	FITTING SIZE C	BOLT HOLE	O.A.L.
R4577240	F88957	3/8"-24 Int. 5/8"-18 Ext.	—	—	7/16"	23 3/8"

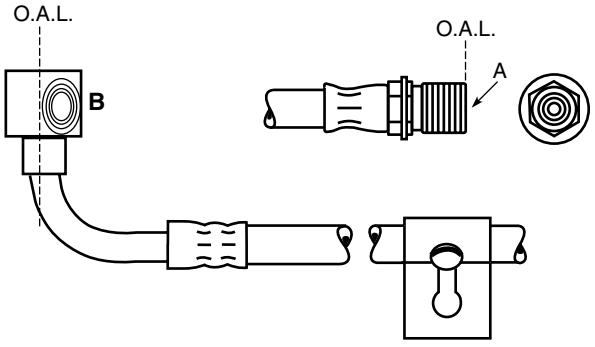

MERITOR NO.	REPLACES WAGNER NO.	FITTING SIZE A	FITTING SIZE B	FITTING SIZE C	BOLT HOLE	O.A.L.
R4577187	F102465 F98922	3/8"-24 Int. 5/8"-24 Ext.	No Thread	—	—	22 5/8"

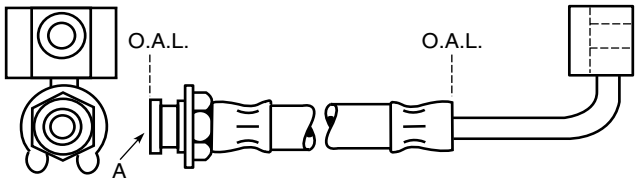

MERITOR NO.	REPLACES WAGNER NO.	FITTING SIZE A	FITTING SIZE B	FITTING SIZE C	BOLT HOLE	O.A.L.
R4577235	F103302	3/8"-24	—	—	3/8"	15"

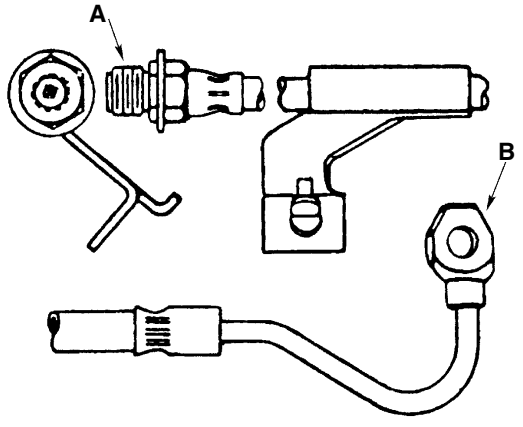

MERITOR NO.	REPLACES WAGNER NO.	FITTING SIZE A	FITTING SIZE B	FITTING SIZE C	BOLT HOLE	O.A.L.
R4577241	—	3/8"-24 Int. 5/8"-18 Ent.	No Thread	—	—	23 5/32"

HYDRAULIC BRAKE HOSES

Listed in Meritor Part Number Sequence

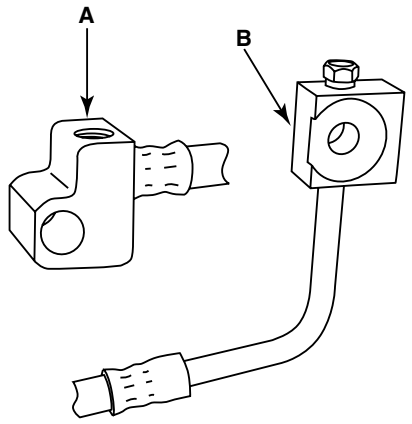

MERITOR NO.	REPLACES WAGNER NO.	FITTING SIZE A	FITTING SIZE B	FITTING SIZE C	BOLT HOLE	O.A.L.
R4577245	F128671	3/8"-24	No Thd.	—	—	21"

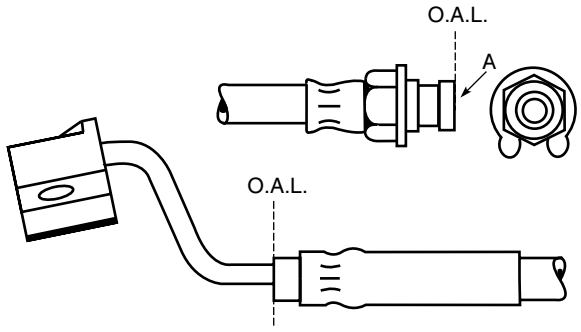

MERITOR NO.	REPLACES WAGNER NO.	FITTING SIZE A	FITTING SIZE B	FITTING SIZE C	BOLT HOLE	O.A.L.
R4577249	F103200	3/8"-24	—	—	3/8"	15 1/8"

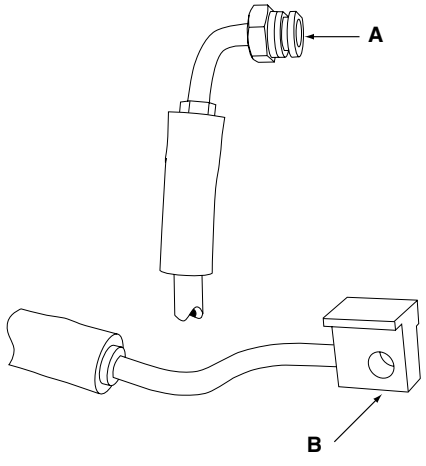

MERITOR NO.	REPLACES WAGNER NO.	FITTING SIZE A	FITTING SIZE B	FITTING SIZE C	BOLT HOLE	O.A.L.
R4577277	F130429	3/8"-24	No Thd.	—	—	20"

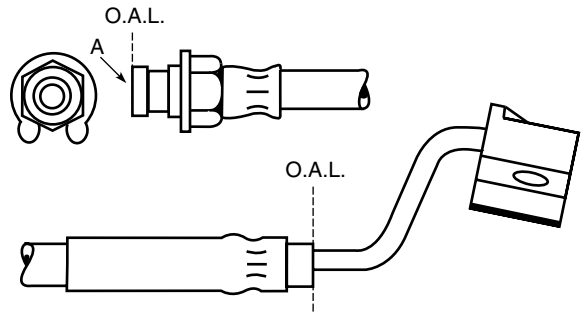

MERITOR NO.	REPLACES WAGNER NO.	FITTING SIZE A	FITTING SIZE B	FITTING SIZE C	BOLT HOLE	O.A.L.
R4577248	F103201	3/8"-24	—	—	3/8"	15 1/8"

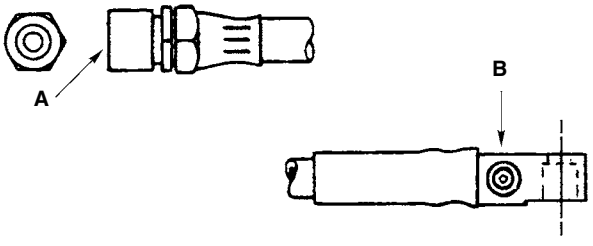

MERITOR NO.	REPLACES WAGNER NO.	FITTING SIZE A	FITTING SIZE B	FITTING SIZE C	BOLT HOLE	O.A.L.
R4577252	F102597	7/16"-24	7/16"-24	—	—	21 7/16"

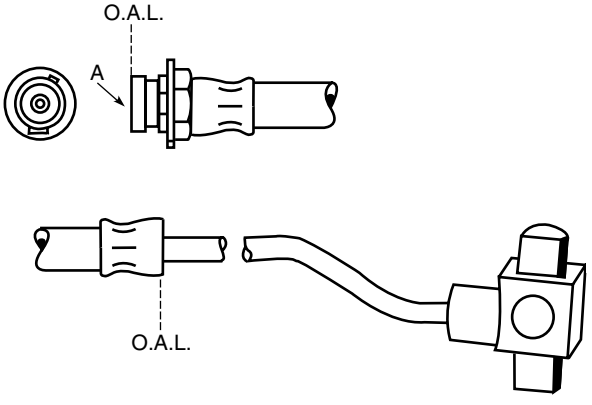

MERITOR NO.	REPLACES WAGNER NO.	FITTING SIZE A	FITTING SIZE B	FITTING SIZE C	BOLT HOLE	O.A.L.
R4577295	F104345	3/8"-24	—	—	3/8"	15 3/8"

HYDRAULIC BRAKE HOSES

Listed in Meritor Part Number Sequence

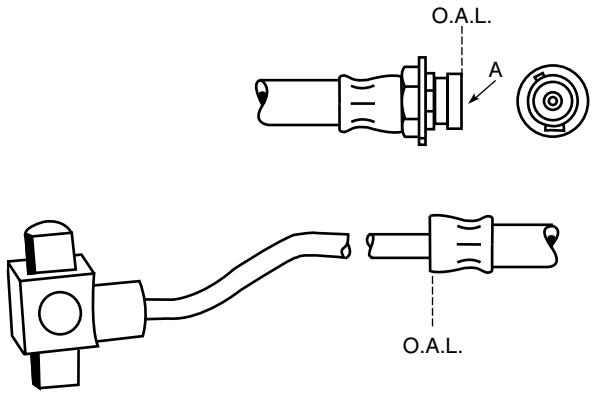

MERITOR NO.	REPLACES WAGNER NO.	FITTING SIZE A	FITTING SIZE B	FITTING SIZE C	BOLT HOLE	O.A.L.
R4577296	F104347	3/8"-24	—	—	3/8"	15 1/2"

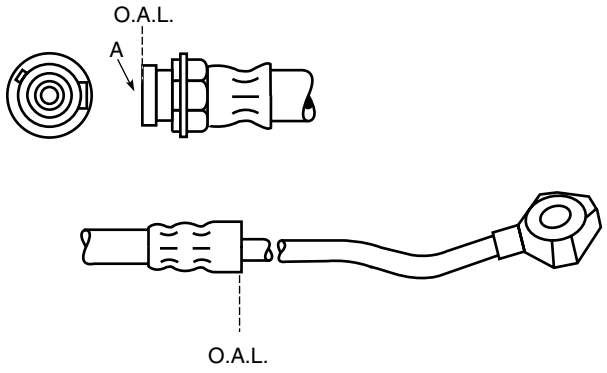

MERITOR NO.	REPLACES WAGNER NO.	FITTING SIZE A	FITTING SIZE B	FITTING SIZE C	BOLT HOLE	O.A.L.
R4577297	F104346	3/8"-24	—	—	3/8"	15 7/16"

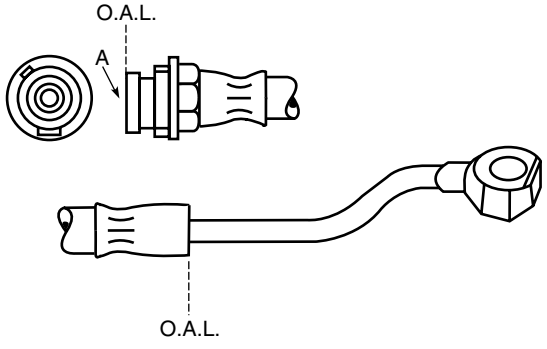

MERITOR NO.	REPLACES WAGNER NO.	FITTING SIZE A	FITTING SIZE B	FITTING SIZE C	BOLT HOLE	O.A.L.
R4577298	F106359	3/8"-24	—	—	3/8"	15 1/2"

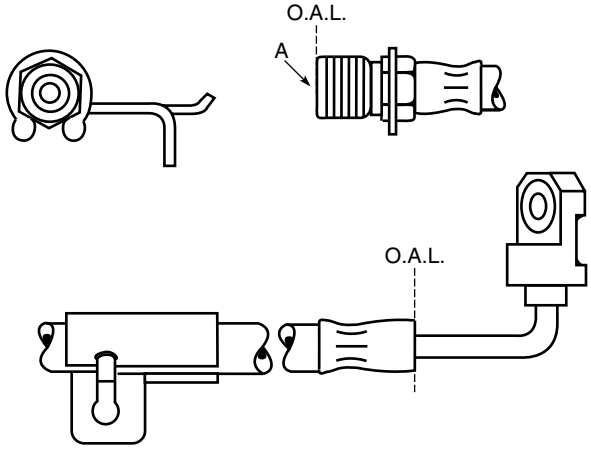

MERITOR NO.	REPLACES WAGNER NO.	FITTING SIZE A	FITTING SIZE B	FITTING SIZE C	BOLT HOLE	O.A.L.
R4577299	F106357	3/8"-24 Int. 5/8"-18 Ext.	—	—	3/8"	20 5/8"

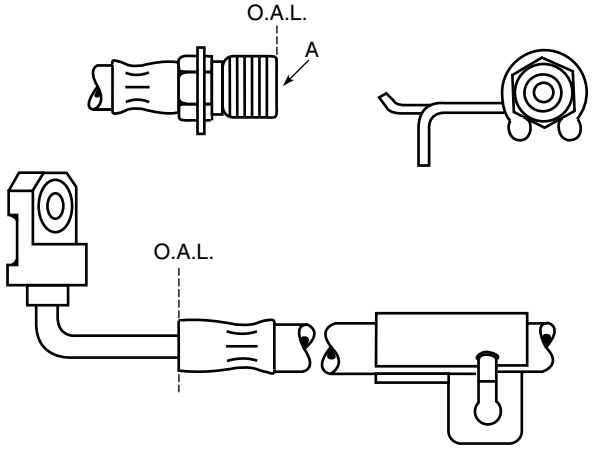

MERITOR NO.	REPLACES WAGNER NO.	FITTING SIZE A	FITTING SIZE B	FITTING SIZE C	BOLT HOLE	O.A.L.
R4577300	F106358	3/8"-24 Int. 5/8"-18 Ext.	—	—	3/8"	20 5/8"

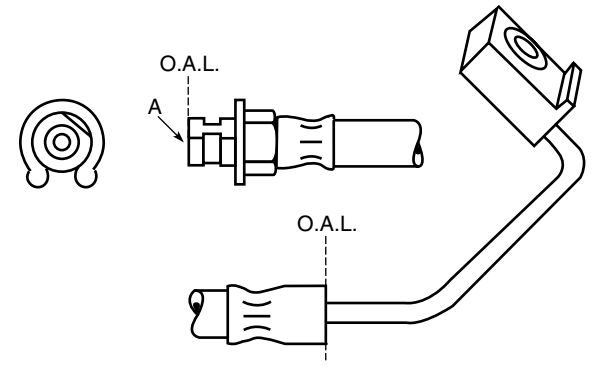

MERITOR NO.	REPLACES WAGNER NO.	FITTING SIZE A	FITTING SIZE B	FITTING SIZE C	BOLT HOLE	O.A.L.
R4577309	F106365	3/8"-24	—	—	3/8"	14 3/8"

HYDRAULIC BRAKE HOSES

Listed in Meritor Part Number Sequence

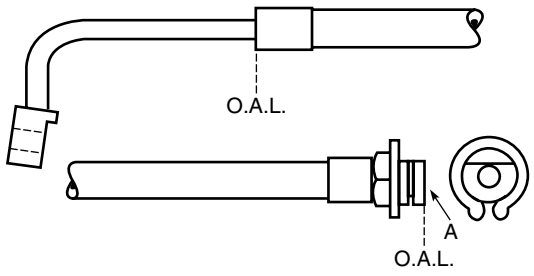

MERITOR NO.	REPLACES WAGNER NO.	FITTING SIZE A	B	C	BOLT HOLE	O.A.L.
R4577311	F106367	3/8"-24	—	—	5/16"	17 3/8"

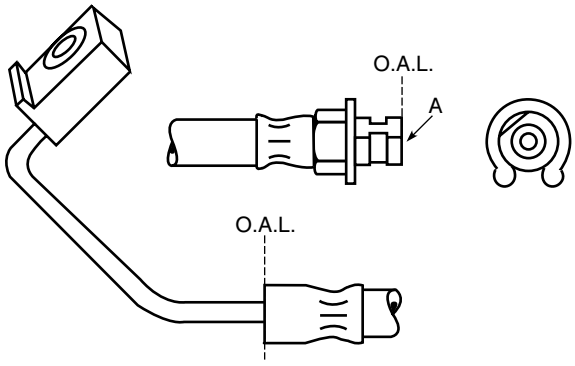

MERITOR NO.	REPLACES WAGNER NO.	FITTING SIZE A	B	C	BOLT HOLE	O.A.L.
R4577312	F107255	3/8"-24	—	—	3/8"	14 1/4"

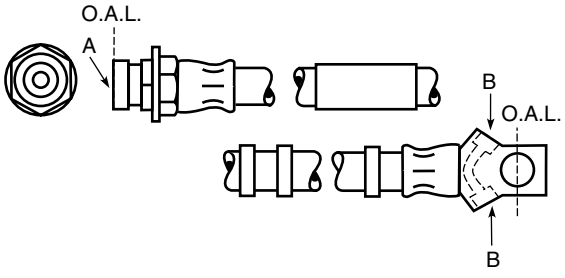

MERITOR NO.	REPLACES WAGNER NO.	FITTING SIZE A	B	C	BOLT HOLE	O.A.L.
R4577314	F106330	3/8"-24	3/8"-24	—	7/16"	26 1/8"

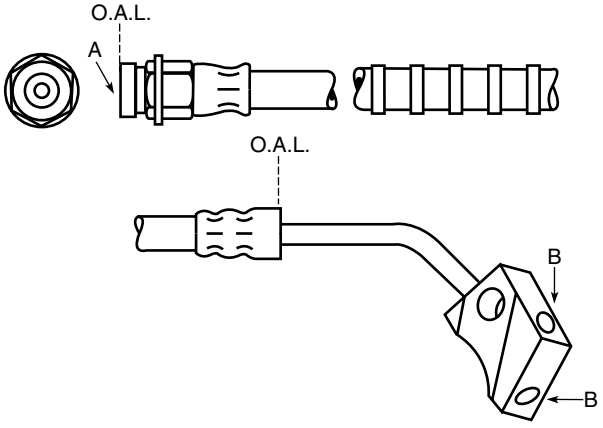

MERITOR NO.	REPLACES WAGNER NO.	FITTING SIZE A	B	C	BOLT HOLE	O.A.L.
R4577315	F106347	3/8"-24	3/8"-24	—	7/16"	21 1/8"

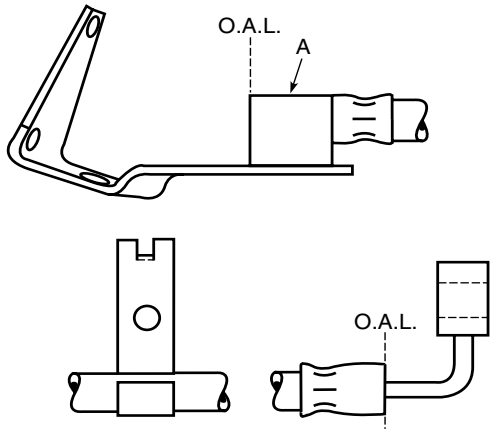

MERITOR NO.	REPLACES WAGNER NO.	FITTING SIZE A	B	C	BOLT HOLE	O.A.L.
R4577316	F106328	3/8"-24	—	—	7/16"	18 1/2"

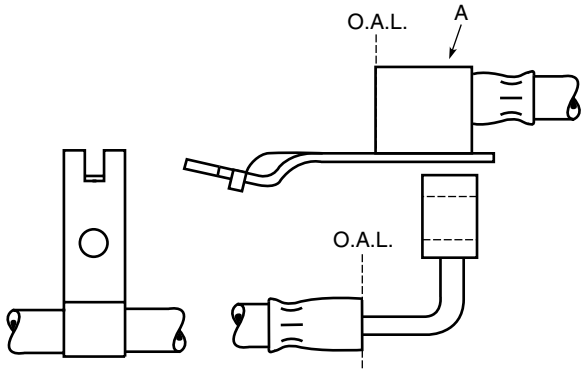

MERITOR NO.	REPLACES WAGNER NO.	FITTING SIZE A	B	C	BOLT HOLE	O.A.L.
R4577317	F106329	3/8"-24	—	—	7/16"	18 1/2"

HYDRAULIC BRAKE HOSES

Listed in Meritor Part Number Sequence

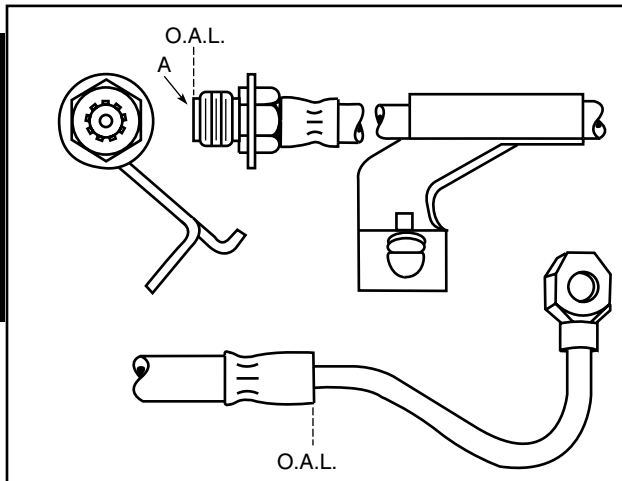

MERITOR NO.	REPLACES WAGNER NO.	FITTING SIZE A	FITTING SIZE B	FITTING SIZE C	BOLT HOLE	O.A.L.
R4577320	F110424	3/8"-24	—	—	3/8"	20 3/4"

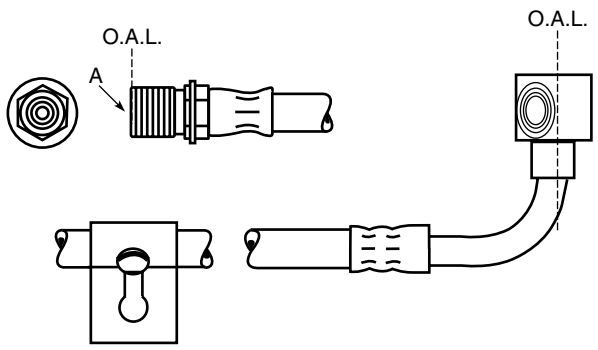

MERITOR NO.	REPLACES WAGNER NO.	FITTING SIZE A	FITTING SIZE B	FITTING SIZE C	BOLT HOLE	O.A.L.
R4577321	F102464	3/8"-24 Int. 5/8"-18 Ext.	—	—	3/8"	20 1/2"

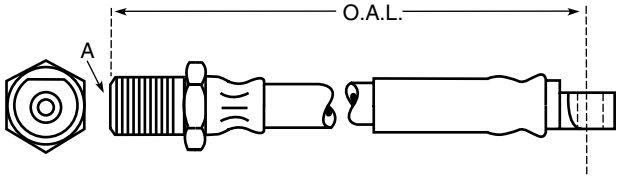

MERITOR NO.	REPLACES WAGNER NO.	FITTING SIZE A	FITTING SIZE B	FITTING SIZE C	BOLT HOLE	O.A.L.
R4577327	F106348	3/8"-24 Int. 3/4"-16 Ext.	—	—	3/8"	12"

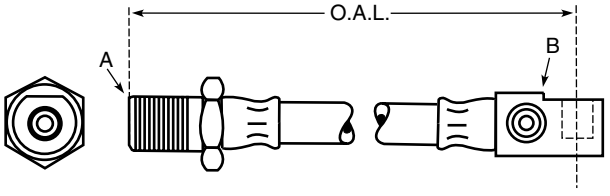

MERITOR NO.	REPLACES WAGNER NO.	FITTING SIZE A	FITTING SIZE B	FITTING SIZE C	BOLT HOLE	O.A.L.
R4577328	F106349	7/16"-24 Int. 3/4"-16 Ext.	3/8"-24	—	5/16"	18 5/16"

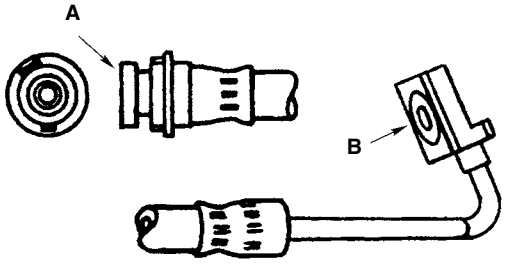

MERITOR NO.	REPLACES WAGNER NO.	FITTING SIZE A	FITTING SIZE B	FITTING SIZE C	BOLT HOLE	O.A.L.
R4577329	F104341	3/8"-24	No. Thd.	—	—	11 3/8"

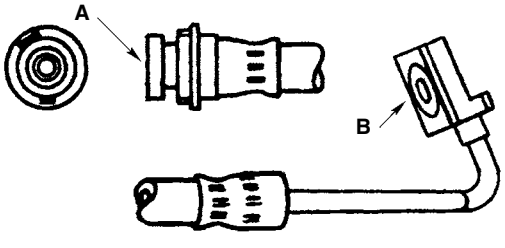

MERITOR NO.	REPLACES WAGNER NO.	FITTING SIZE A	FITTING SIZE B	FITTING SIZE C	BOLT HOLE	O.A.L.
R4577330	F104342	3/8"-24	No. Thd.	—	—	11 3/8"

HYDRAULIC BRAKE HOSES

Listed in Meritor Part Number Sequence

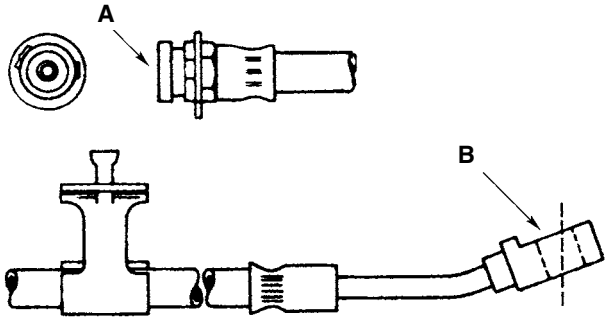

MERITOR NO.	REPLACES WAGNER NO.	FITTING SIZE A	FITTING SIZE B	FITTING SIZE C	BOLT HOLE	O.A.L.
R4577332	—	3/8"-24	No Thd.	—	—	23 1/4"

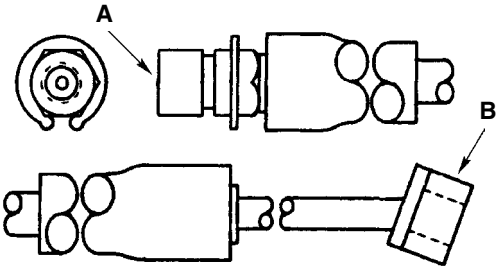

MERITOR NO.	REPLACES WAGNER NO.	FITTING SIZE A	FITTING SIZE B	FITTING SIZE C	BOLT HOLE	O.A.L.
R4577334	F98918	3/8"-24	No Thread	—	—	22"

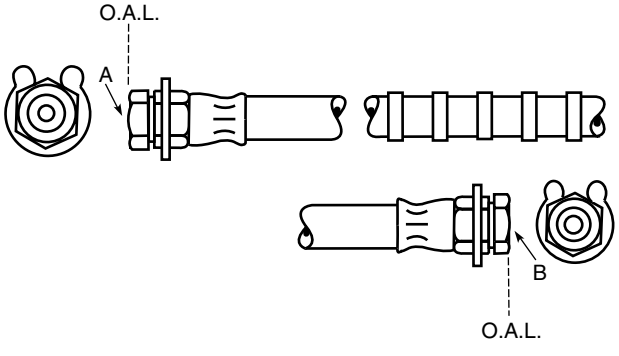

MERITOR NO.	REPLACES WAGNER NO.	FITTING SIZE A	FITTING SIZE B	FITTING SIZE C	BOLT HOLE	O.A.L.
R4577378	F110131	3/8"-24	3/8"-24	—	—	15 1/8"

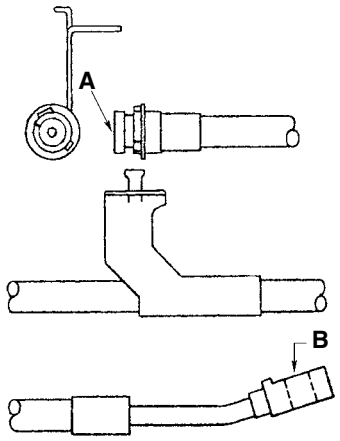

MERITOR NO.	REPLACES WAGNER NO.	FITTING SIZE A	FITTING SIZE B	FITTING SIZE C	BOLT HOLE	O.A.L.
R4577333	F113296 F88951	3/8"-24	No Thd.	—	—	23 7/8"

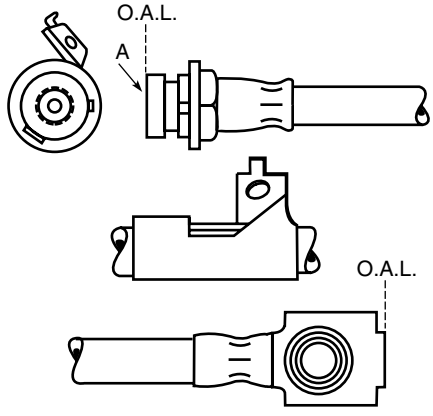

MERITOR NO.	REPLACES WAGNER NO.	FITTING SIZE A	FITTING SIZE B	FITTING SIZE C	BOLT HOLE	O.A.L.
R4577340	F110420	M10x1	—	—	10mm	17 3/4"

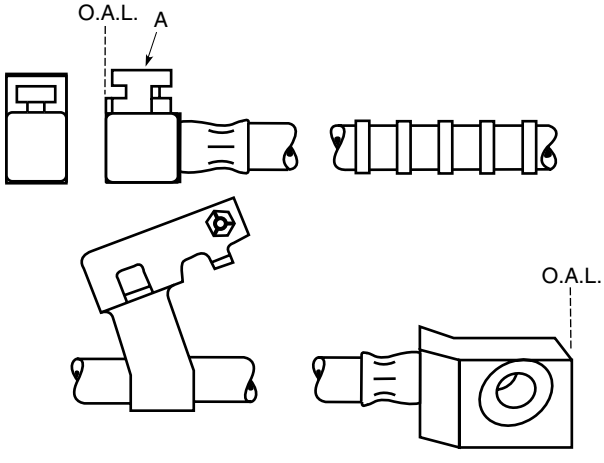

MERITOR NO.	REPLACES WAGNER NO.	FITTING SIZE A	FITTING SIZE B	FITTING SIZE C	BOLT HOLE	O.A.L.
R4577379	F107280	3/8"-24	—	—	7/16"	20 9/16"

HYDRAULIC BRAKE HOSES

Listed in Meritor Part Number Sequence

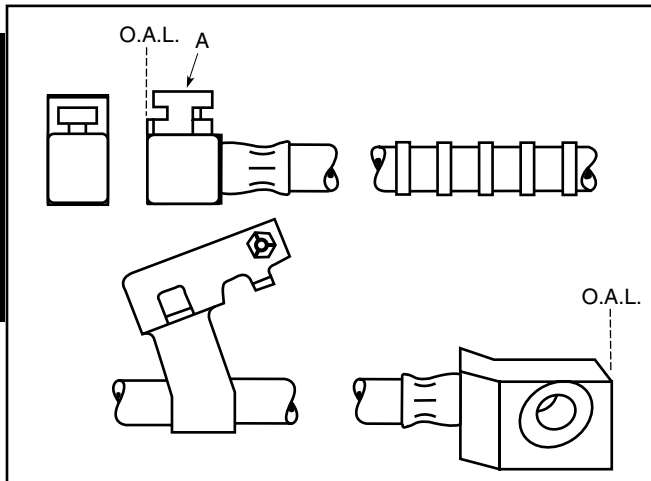

MERITOR NO.	REPLACES WAGNER NO.	FITTING SIZE A	FITTING SIZE B	FITTING SIZE C	BOLT HOLE	O.A.L.
R4577380	F107279	3/8"-24	—	—	7/16"	20 9/16"

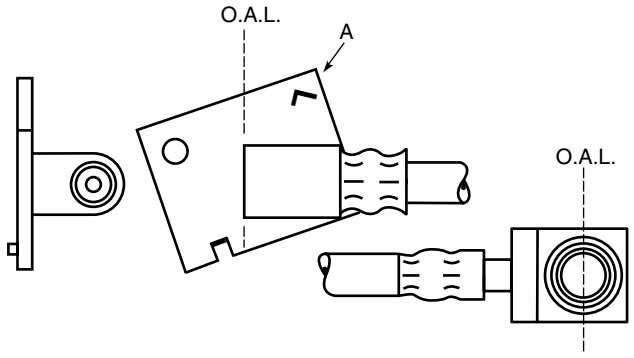

MERITOR NO.	REPLACES WAGNER NO.	FITTING SIZE A	FITTING SIZE B	FITTING SIZE C	BOLT HOLE	O.A.L.
R4577387	F98937	3/8"-24	—	—	7/16"	10 7/16"

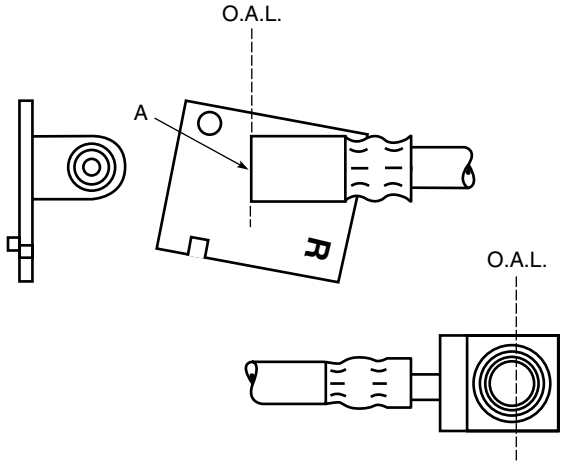

MERITOR NO.	REPLACES WAGNER NO.	FITTING SIZE A	FITTING SIZE B	FITTING SIZE C	BOLT HOLE	O.A.L.
R4577388	F98938	3/8"-24	—	—	7/16"	10 7/16"

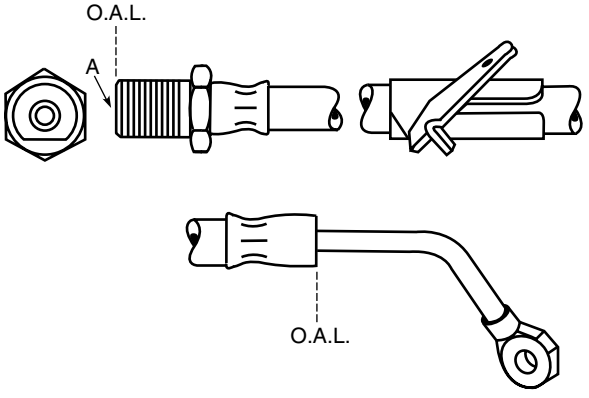

MERITOR NO.	REPLACES WAGNER NO.	FITTING SIZE A	FITTING SIZE B	FITTING SIZE C	BOLT HOLE	O.A.L.
R4577415	F107284	3/8"-24	—	—	3/8"	17 3/8"

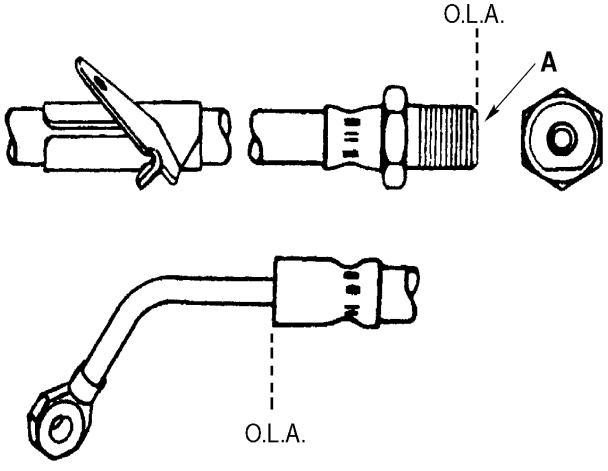

MERITOR NO.	REPLACES WAGNER NO.	FITTING SIZE A	FITTING SIZE B	FITTING SIZE C	BOLT HOLE	O.A.L.
R4577416	F107285	3/8"-24	—	—	3/8"	17 3/8"

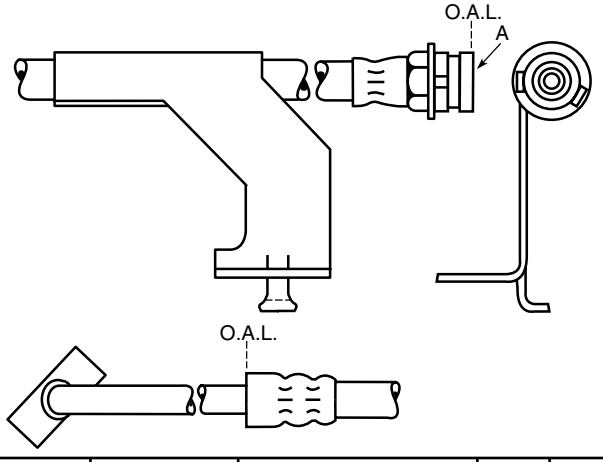

MERITOR NO.	REPLACES WAGNER NO.	FITTING SIZE A	FITTING SIZE B	FITTING SIZE C	BOLT HOLE	O.A.L.
R4577417	F110159	3/8"-24	—	—	3/8"	21 3/8"

HYDRAULIC BRAKE HOSES

Listed in Meritor Part Number Sequence

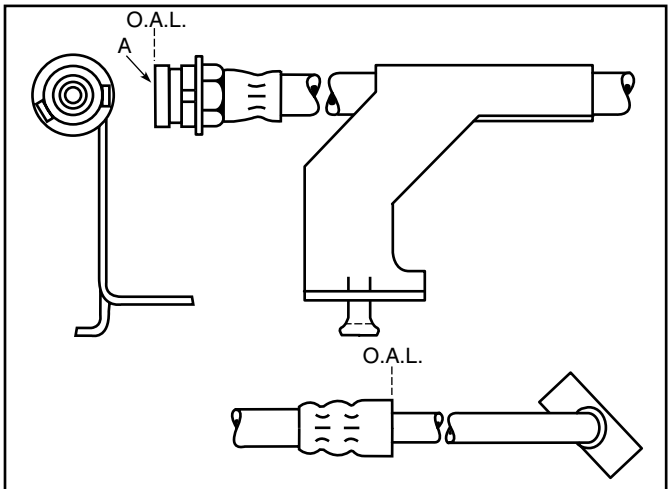

MERITOR NO.	REPLACES WAGNER NO.	FITTING SIZE A	FITTING SIZE B	FITTING SIZE C	BOLT HOLE	O.A.L.
R4577418	F110158	3/8"-24	—	—	3/8"	20 3/4"

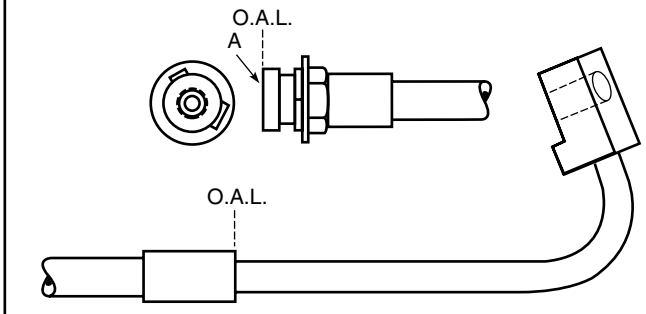

MERITOR NO.	REPLACES WAGNER NO.	FITTING SIZE A	FITTING SIZE B	FITTING SIZE C	BOLT HOLE	O.A.L.
R4577419	F107274	3/8"-24	—	—	3/8"	15 7/16"

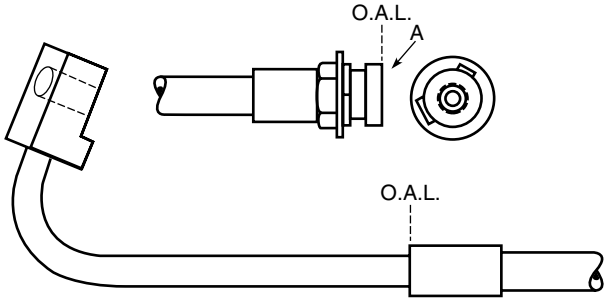

MERITOR NO.	REPLACES WAGNER NO.	FITTING SIZE A	FITTING SIZE B	FITTING SIZE C	BOLT HOLE	O.A.L.
R4577420	F107275	3/8"-24	—	—	3/8"	15 15/16"

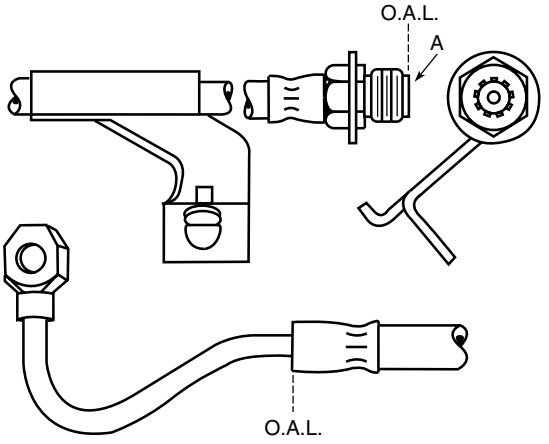

MERITOR NO.	REPLACES WAGNER NO.	FITTING SIZE A	FITTING SIZE B	FITTING SIZE C	BOLT HOLE	O.A.L.
R4577421	F110425	3/8"-24 Int. 5/8"-18 Ext.	—	—	3/8"	20 3/4"

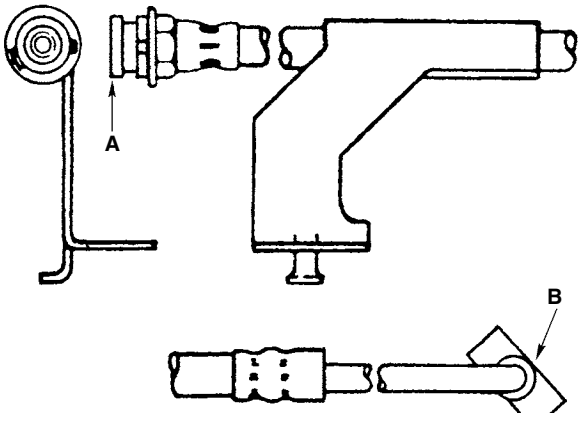

MERITOR NO.	REPLACES WAGNER NO.	FITTING SIZE A	FITTING SIZE B	FITTING SIZE C	BOLT HOLE	O.A.L.
R4577425	—	3/8"-24	No Thd.	—	—	23 1/4"

HYDRAULIC BRAKE HOSES

Listed in Meritor Part Number Sequence

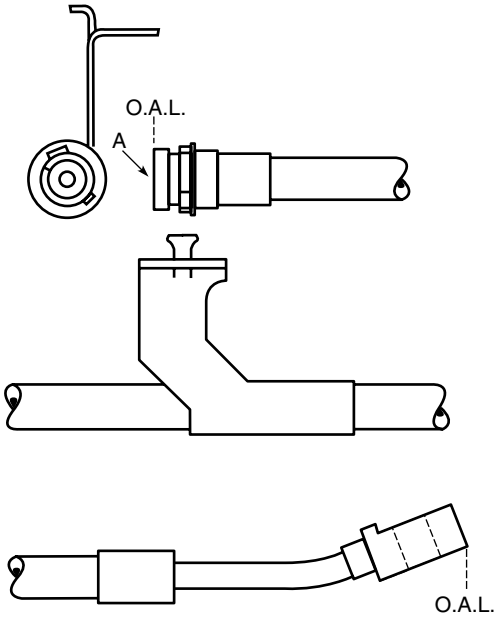

MERITOR NO.	REPLACES WAGNER NO.	FITTING SIZE A	FITTING SIZE B	FITTING SIZE C	BOLT HOLE	O.A.L.
R4577427	F107272	3/8"-24	—	—	3/8"	24 1/8"

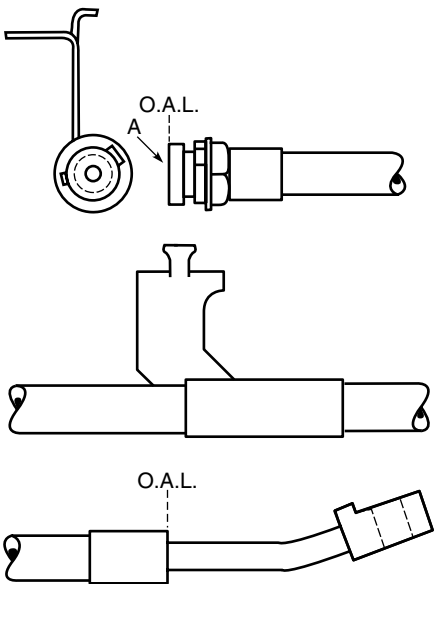

MERITOR NO.	REPLACES WAGNER NO.	FITTING SIZE A	FITTING SIZE B	FITTING SIZE C	BOLT HOLE	O.A.L.
R4577428	F107273	3/8"-24	—	—	3/8"	19 5/8"

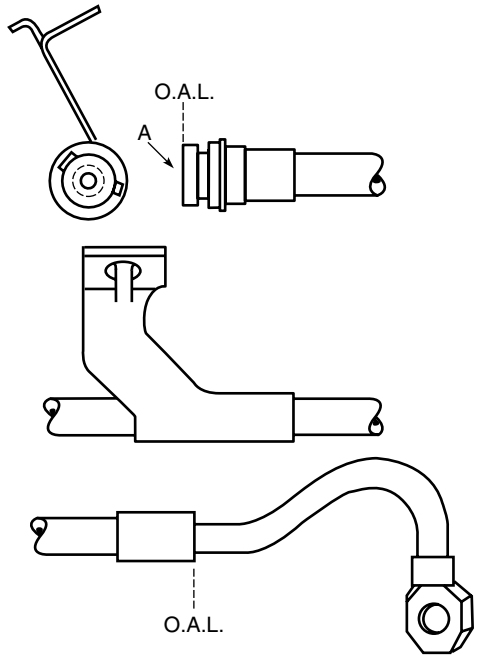

MERITOR NO.	REPLACES WAGNER NO.	FITTING SIZE A	FITTING SIZE B	FITTING SIZE C	BOLT HOLE	O.A.L.
R4577429	F110426	3/8"-24	—	—	3/8"	22"

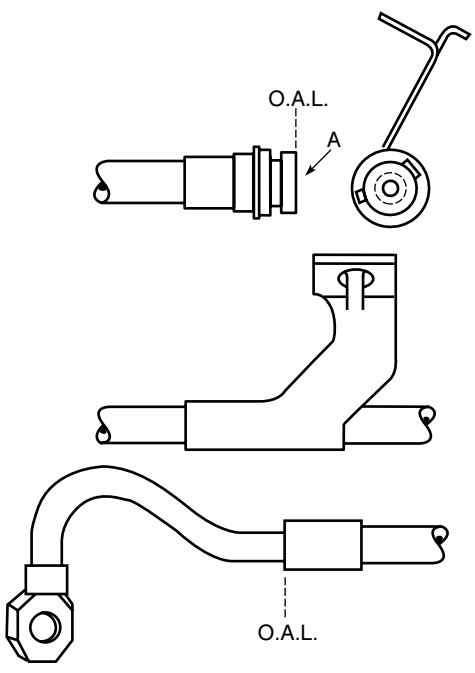

MERITOR NO.	REPLACES WAGNER NO.	FITTING SIZE A	FITTING SIZE B	FITTING SIZE C	BOLT HOLE	O.A.L.
R4577430	F110427	3/8"-24	—	—	3/8"	20 3/4"

HYDRAULIC BRAKE HOSES

Listed in Meritor Part Number Sequence

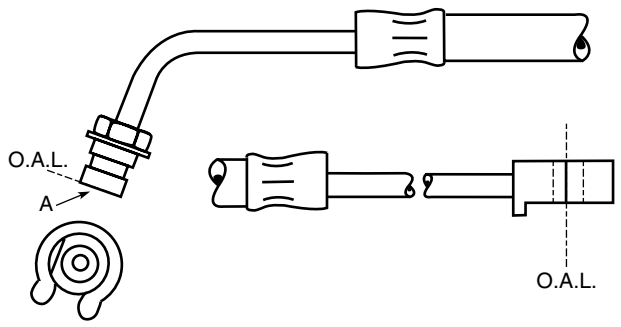

MERITOR NO.	REPLACES WAGNER NO.	FITTING SIZE A	FITTING SIZE B	FITTING SIZE C	BOLT HOLE	O.A.L.
R4577440	F107300	3/8"-24	—	—	3/8"	16 15/16"

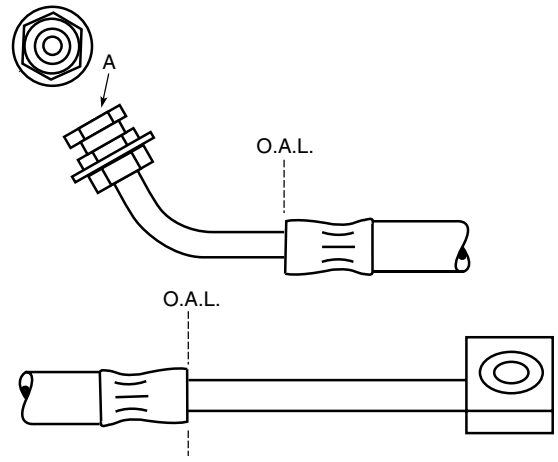

MERITOR NO.	REPLACES WAGNER NO.	FITTING SIZE A	FITTING SIZE B	FITTING SIZE C	BOLT HOLE	O.A.L.
R4577441	F106331	3/8"-24	—	—	3/8"	12 5/8"

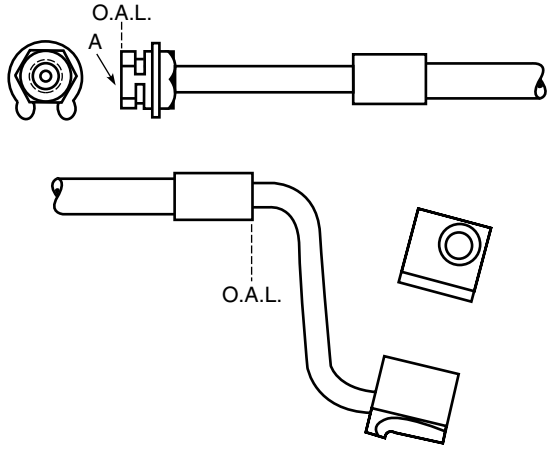

MERITOR NO.	REPLACES WAGNER NO.	FITTING SIZE A	FITTING SIZE B	FITTING SIZE C	BOLT HOLE	O.A.L.
R4577443	F111134	3/8"-24	—	—	3/8"	16 7/8"

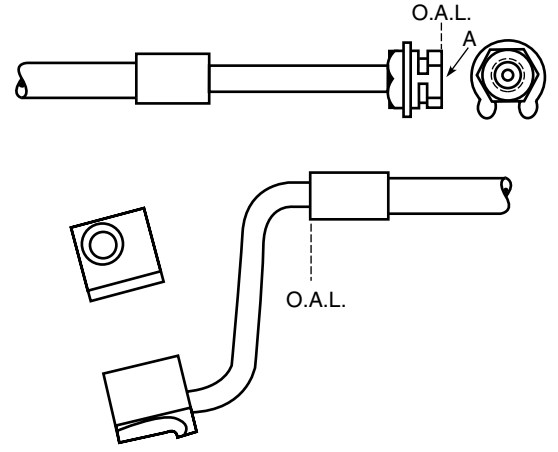

MERITOR NO.	REPLACES WAGNER NO.	FITTING SIZE A	FITTING SIZE B	FITTING SIZE C	BOLT HOLE	O.A.L.
R4577444	F111135	3/8"-24	—	—	3/8"	16 7/8"

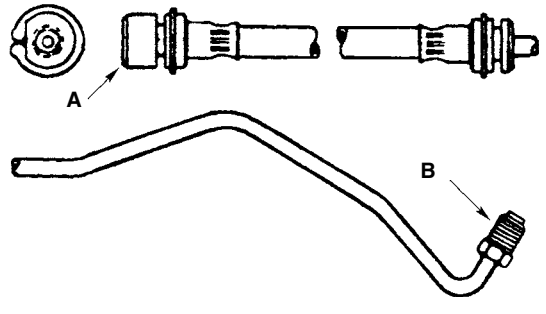

MERITOR NO.	REPLACES WAGNER NO.	FITTING SIZE A	FITTING SIZE B	FITTING SIZE C	BOLT HOLE	O.A.L.
R4577452	F103307	1/2"-20	7/16"-24	—	—	31 1/8"

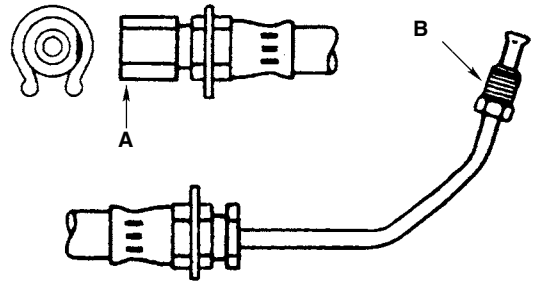

MERITOR NO.	REPLACES WAGNER NO.	FITTING SIZE A	FITTING SIZE B	FITTING SIZE C	BOLT HOLE	O.A.L.
R4577453	F103311	1/2"-20	7/16"-24	—	—	31 1/16"

HYDRAULIC BRAKE HOSES

Listed in Meritor Part Number Sequence

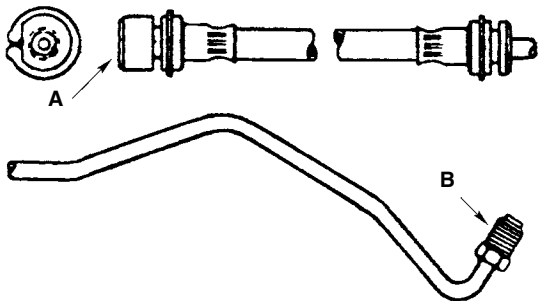

MERITOR NO.	REPLACES WAGNER NO.	FITTING SIZE A	FITTING SIZE B	FITTING SIZE C	BOLT HOLE	O.A.L.
R4577454	F103312	7/16"-24	7/16"-24	—	—	31 5/16"

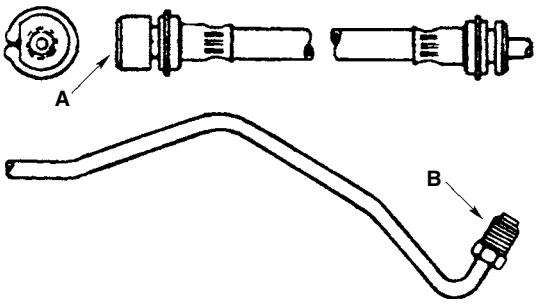

MERITOR NO.	REPLACES WAGNER NO.	FITTING SIZE A	FITTING SIZE B	FITTING SIZE C	BOLT HOLE	O.A.L.
R4577455	F103312	7/16"-24	7/16"-24	—	—	31 5/16"

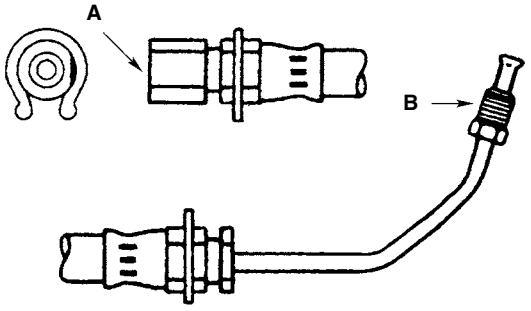

MERITOR NO.	REPLACES WAGNER NO.	FITTING SIZE A	FITTING SIZE B	FITTING SIZE C	BOLT HOLE	O.A.L.
R4577457	F103314	7/16"-24	7/16"-24	—	—	26 5/8"

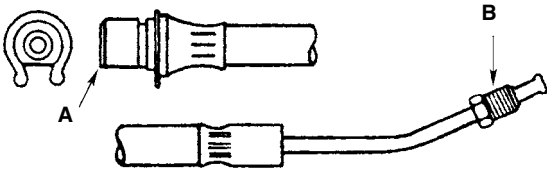

MERITOR NO.	REPLACES WAGNER NO.	FITTING SIZE A	FITTING SIZE B	FITTING SIZE C	BOLT HOLE	O.A.L.
R4577460	F106648 F106666	3/8"-24	7/16"-24	—	—	25 1/8"

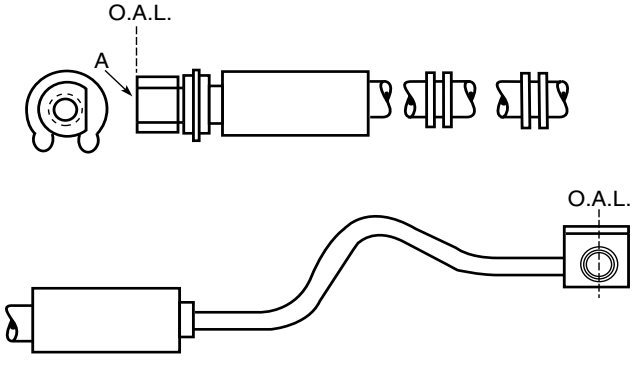

MERITOR NO.	REPLACES WAGNER NO.	FITTING SIZE A	FITTING SIZE B	FITTING SIZE C	BOLT HOLE	O.A.L.
R4577461	F111945	7/16"-24	—	—	7/16"	31 13/16"

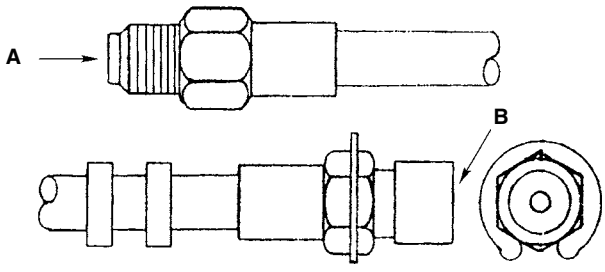

MERITOR NO.	REPLACES WAGNER NO.	FITTING SIZE A	FITTING SIZE B	FITTING SIZE C	BOLT HOLE	O.A.L.
R4577463	F111946	1/2"-20	7/16"-24	—	—	21 1/2"

HYDRAULIC BRAKE HOSES

Listed in Meritor Part Number Sequence

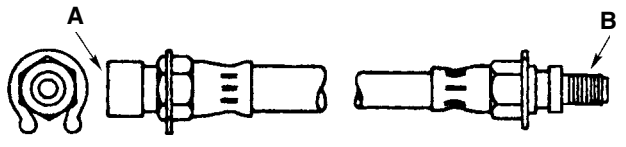

MERITOR NO.	REPLACES WAGNER NO.	FITTING SIZE A	FITTING SIZE B	FITTING SIZE C	BOLT HOLE	O.A.L.
R4577479	F71305 F98281	7/16"-20	7/16"-24	—	—	18 11/16"

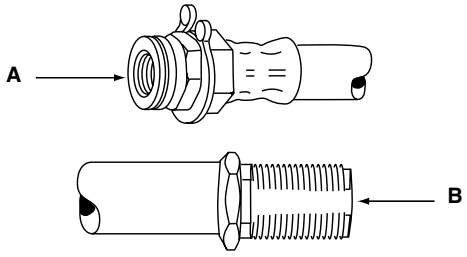

MERITOR NO.	REPLACES WAGNER NO.	FITTING SIZE A	FITTING SIZE B	FITTING SIZE C	BOLT HOLE	O.A.L.
R4577481	F102130 F102327 F109138	7/16"-24	7/8"-24 Int. 7/8"-14 Ext.	—	—	23 3/16"

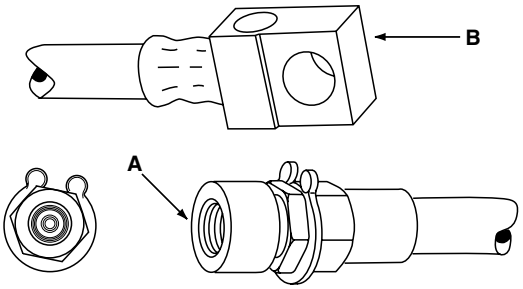

MERITOR NO.	REPLACES WAGNER NO.	FITTING SIZE A	FITTING SIZE B	FITTING SIZE C	BOLT HOLE	O.A.L.
R4577482	—	7/16"-24	7/16"-24 (2 Plcs)	—	—	18 29/64" 18 45/64"

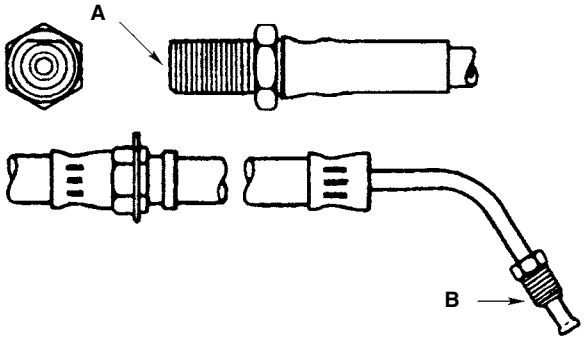

MERITOR NO.	REPLACES WAGNER NO.	FITTING SIZE A	FITTING SIZE B	FITTING SIZE C	BOLT HOLE	O.A.L.
R4577484	F106647	7/16"-24 Int. 7/8"-24 Ext.	7/16"-24	—	—	29 3/8"

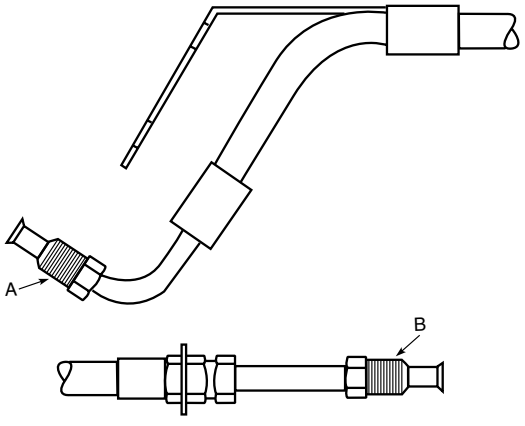

MERITOR NO.	REPLACES WAGNER NO.	FITTING SIZE A	FITTING SIZE B	FITTING SIZE C	BOLT HOLE	O.A.L.
R4577495	F107739	7/16"-24	7/16"-24	—	—	20 1/8"

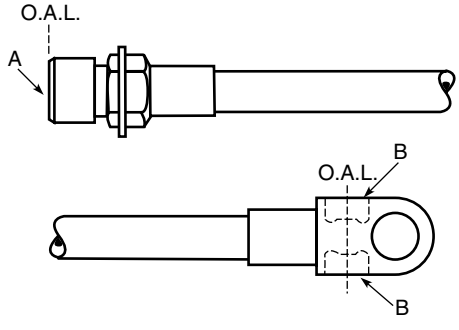

MERITOR NO.	REPLACES WAGNER NO.	FITTING SIZE A	FITTING SIZE B	FITTING SIZE C	BOLT HOLE	O.A.L.
R4577500	F107734	7/16"-24	7/16"-24	—	7/16"	18 5/16"

HYDRAULIC BRAKE HOSES

Listed in Meritor Part Number Sequence

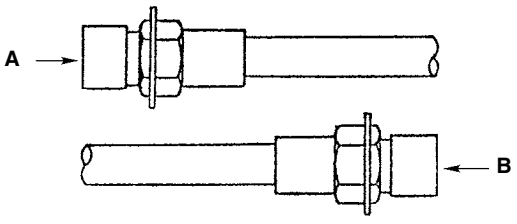

MERITOR NO.	REPLACES WAGNER NO.	FITTING SIZE A	FITTING SIZE B	FITTING SIZE C	BOLT HOLE	O.A.L.
R4577503	F111137	7/16"-24	7/16"-24	—	—	24 1/2"

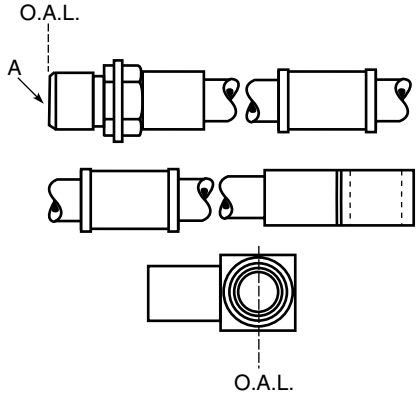

MERITOR NO.	REPLACES WAGNER NO.	FITTING SIZE A	FITTING SIZE B	FITTING SIZE C	BOLT HOLE	O.A.L.
R4577514	F113151	7/16"-24	—	—	3/8"	32 1/16"

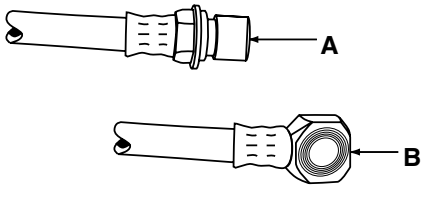

MERITOR NO.	REPLACES WAGNER NO.	FITTING SIZE A	FITTING SIZE B	FITTING SIZE C	BOLT HOLE	O.A.L.
R4577544	F124596 F132325	3/8"-24	No Thd.	—	—	36 3/4"

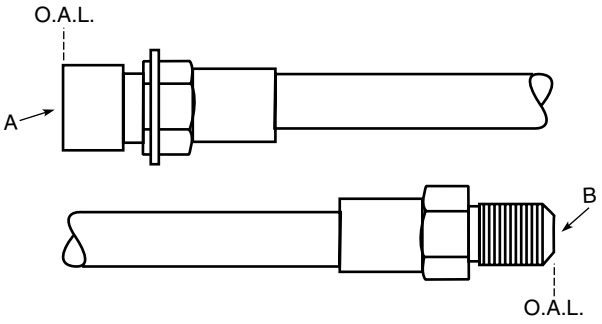

MERITOR NO.	REPLACES WAGNER NO.	FITTING SIZE A	FITTING SIZE B	FITTING SIZE C	BOLT HOLE	O.A.L.
R4577512	F113154	7/16"-24	7/16"-24	—	—	11 13/16"

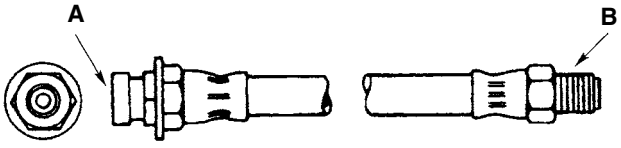

MERITOR NO.	REPLACES WAGNER NO.	FITTING SIZE A	FITTING SIZE B	FITTING SIZE C	BOLT HOLE	O.A.L.
R4577537	F78079	3/8"-24	7/16"-24	—	—	22 7/8"

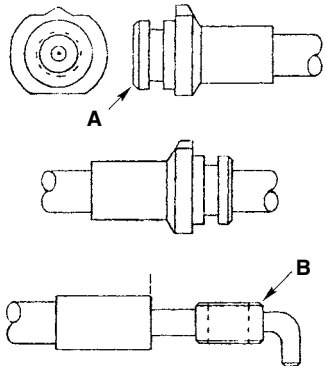

MERITOR NO.	REPLACES WAGNER NO.	FITTING SIZE A	FITTING SIZE B	FITTING SIZE C	BOLT HOLE	O.A.L.
R4577548	F88950	3/8"-24	No Thd.	—	—	22 7/8"

HYDRAULIC BRAKE HOSES

Listed in Meritor Part Number Sequence

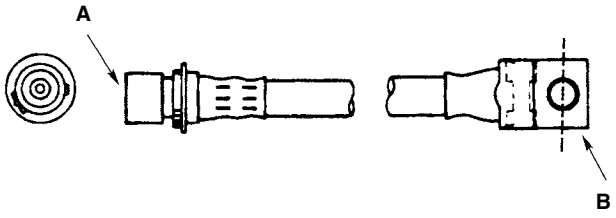

MERITOR NO.	REPLACES WAGNER NO.	FITTING SIZE A	FITTING SIZE B	FITTING SIZE C	BOLT HOLE	O.A.L.
R4577558	F111141	7/16"-24	3/8"-24	—	—	14 7/8"

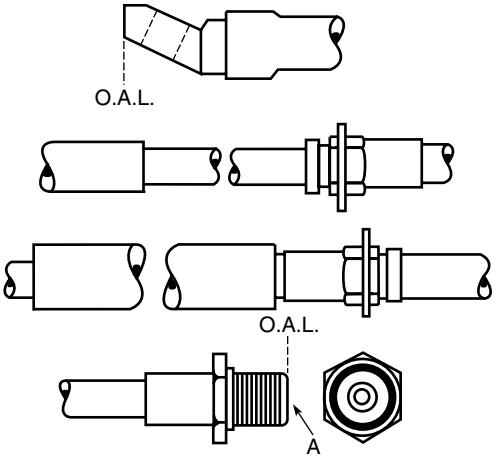

MERITOR NO.	REPLACES WAGNER NO.	FITTING SIZE A	FITTING SIZE B	FITTING SIZE C	BOLT HOLE	O.A.L.
R4577560	F111398	3/8"-24 Int. 5/8"-18 Ext.	—	—	10mm	24 5/16"

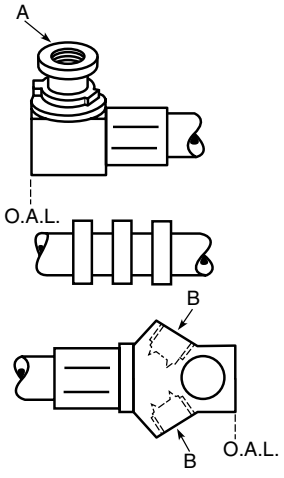

MERITOR NO.	REPLACES WAGNER NO.	FITTING SIZE A	FITTING SIZE B	FITTING SIZE C	BOLT HOLE	O.A.L.
R4577565	F111396	3/8"-24	3/8"-24	—	7/16"	12 1/4"

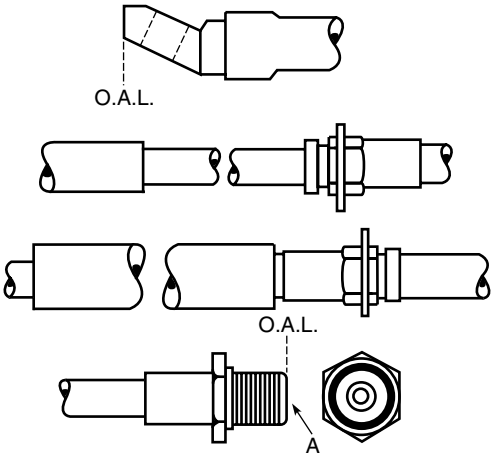

MERITOR NO.	REPLACES WAGNER NO.	FITTING SIZE A	FITTING SIZE B	FITTING SIZE C	BOLT HOLE	O.A.L.
R4577559	F111397	3/8"-24 Int. 5/8"-18 Ext.	—	—	10mm	37"

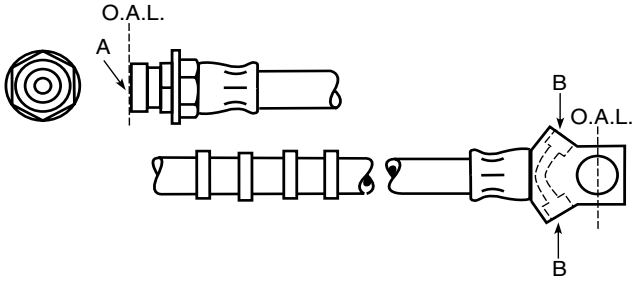

MERITOR NO.	REPLACES WAGNER NO.	FITTING SIZE A	FITTING SIZE B	FITTING SIZE C	BOLT HOLE	O.A.L.
R4577564	F107281	3/8"-24	3/8"-24	—	7/16"	22 3/8"

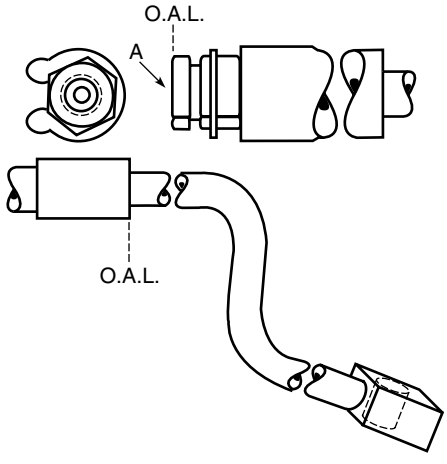

MERITOR NO.	REPLACES WAGNER NO.	FITTING SIZE A	FITTING SIZE B	FITTING SIZE C	BOLT HOLE	O.A.L.
R4577596	F111949	3/8"-24	—	—	3/8"	11 9/16"

HYDRAULIC BRAKE HOSES

Listed in Meritor Part Number Sequence

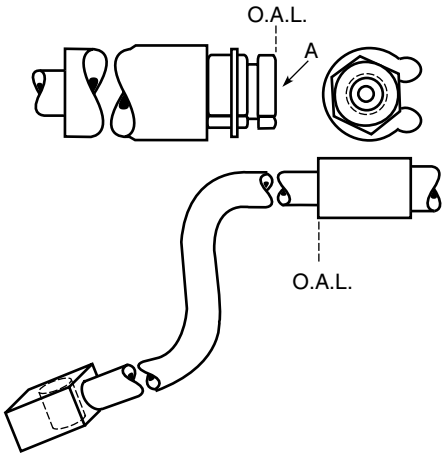

MERITOR NO.	REPLACES WAGNER NO.	FITTING SIZE A	FITTING SIZE B	FITTING SIZE C	BOLT HOLE	O.A.L.
R4577597	F111950	3/8"-24	—	—	3/8"	11 9/16"

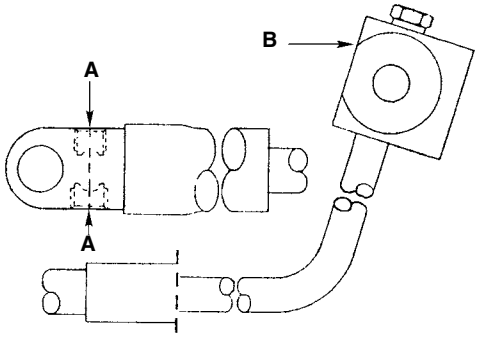

MERITOR NO.	REPLACES WAGNER NO.	FITTING SIZE A	FITTING SIZE B	FITTING SIZE C	BOLT HOLE	O.A.L.
R4577612	F113379	7/16"-24	3/8"-24	No. Thd.	—	19 5/8"

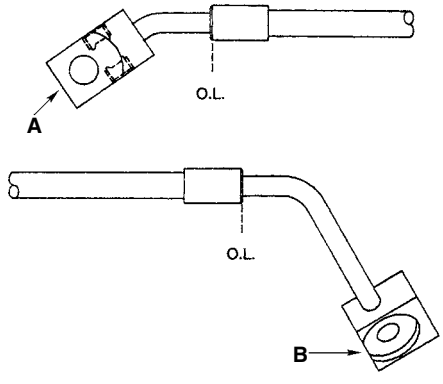

MERITOR NO.	REPLACES WAGNER NO.	FITTING SIZE A	FITTING SIZE B	FITTING SIZE C	BOLT HOLE	O.A.L.
R4577614	F113377	3/8"-24	No Thd.	—	—	20 1/2"

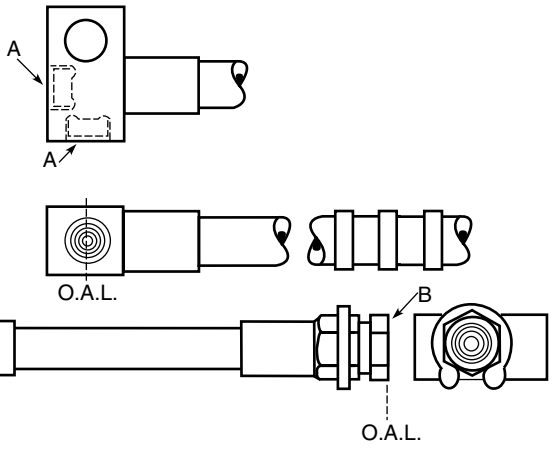

MERITOR NO.	REPLACES WAGNER NO.	FITTING SIZE A	FITTING SIZE B	FITTING SIZE C	BOLT HOLE	O.A.L.
R4577598	F114038	3/8"-24	3/8"-24	—	7/16"	16 1/4"

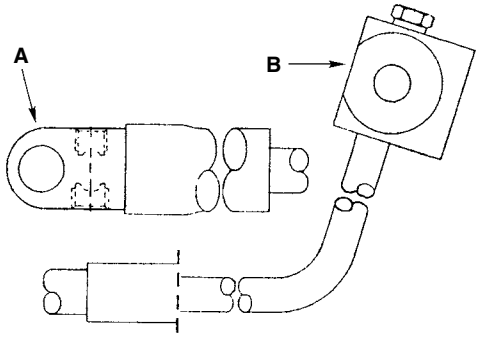

MERITOR NO.	REPLACES WAGNER NO.	FITTING SIZE A	FITTING SIZE B	FITTING SIZE C	BOLT HOLE	O.A.L.
R4577613	F113379 F71313 F71343	3/8"-24 7/16"-24	No Thread	—	—	19 1/4"

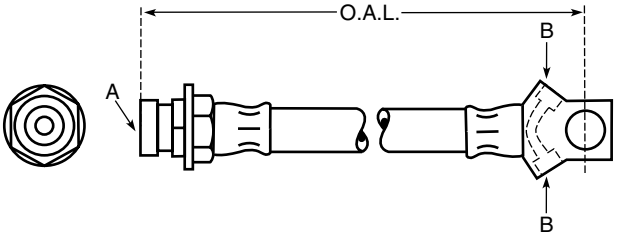

MERITOR NO.	REPLACES WAGNER NO.	FITTING SIZE A	FITTING SIZE B	FITTING SIZE C	BOLT HOLE	O.A.L.
R4577631	F97660	3/8"-24	3/8"-24	—	7/16"	13"

HYDRAULIC BRAKE HOSES

Listed in Meritor Part Number Sequence

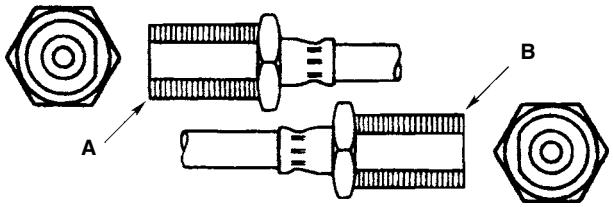

MERITOR NO.	REPLACES WAGNER NO.	FITTING SIZE A	FITTING SIZE B	FITTING SIZE C	BOLT HOLE	O.A.L.
R4577686	F124052 F80962	7/16"-24 Int. 3/4"-16 Ext.	7/16"-24 Int. 3/4"-16 Ext.	—	—	29 1/8"

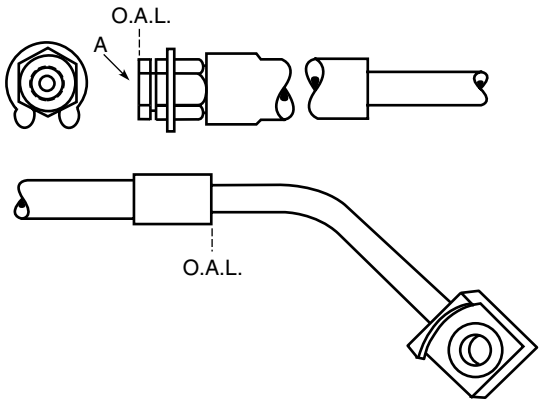

MERITOR NO.	REPLACES WAGNER NO.	FITTING SIZE A	FITTING SIZE B	FITTING SIZE C	BOLT HOLE	O.A.L.
R4577787	F118172	3/8"-24	—	—	3/8"	10 5/8"

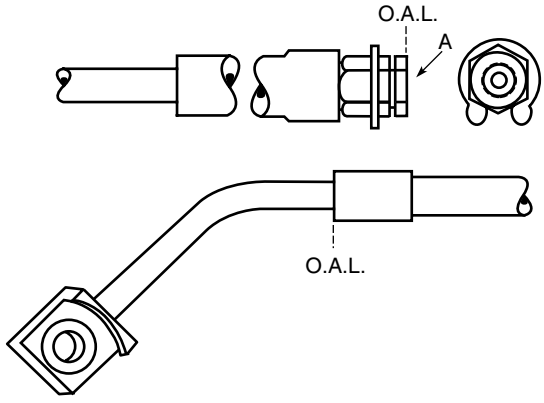

MERITOR NO.	REPLACES WAGNER NO.	FITTING SIZE A	FITTING SIZE B	FITTING SIZE C	BOLT HOLE	O.A.L.
R4577788	F118173	3/8"-24	—	—	3/8"	10 5/8"

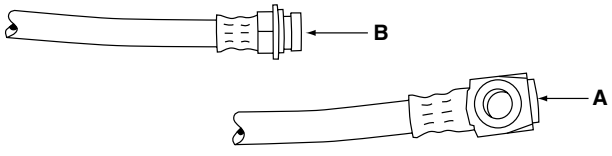

MERITOR NO.	REPLACES WAGNER NO.	FITTING SIZE A	FITTING SIZE B	FITTING SIZE C	BOLT HOLE	O.A.L.
R4577841	F123294	No Thd.	7/16"-24	—	—	—

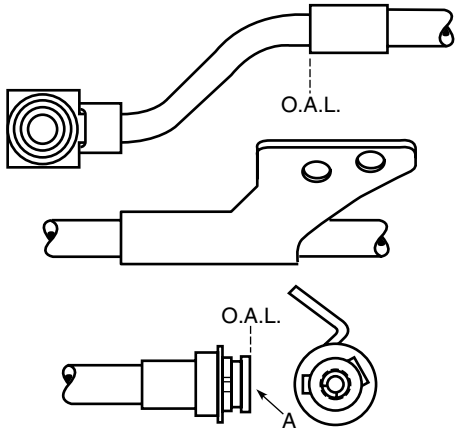

MERITOR NO.	REPLACES WAGNER NO.	FITTING SIZE A	FITTING SIZE B	FITTING SIZE C	BOLT HOLE	O.A.L.
R4577760	F116846	3/8"-24	—	—	3/8"	21 5/8"

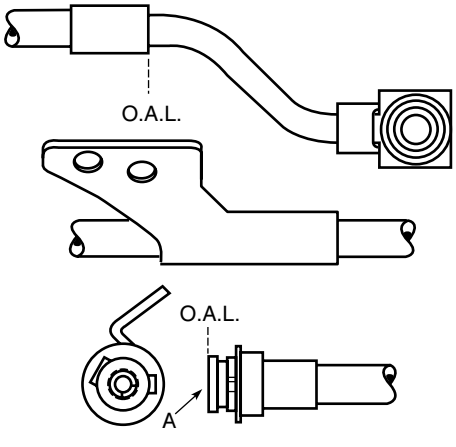

MERITOR NO.	REPLACES WAGNER NO.	FITTING SIZE A	FITTING SIZE B	FITTING SIZE C	BOLT HOLE	O.A.L.
R4577761	F116847	3/8"-24	—	—	3/8"	21 5/8"

HYDRAULIC BRAKE HOSES

Listed in Meritor Part Number Sequence

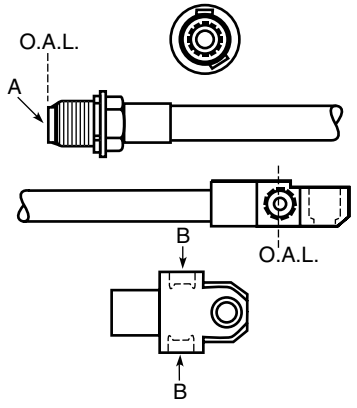

MERITOR NO.	REPLACES WAGNER NO.	FITTING SIZE A	FITTING SIZE B	FITTING SIZE C	BOLT HOLE	O.A.L.
R4577765	F118117	3/8"-24 Int. 5/8"-18 Ext.	3/8"-24	—	5/16"	16 13/16"

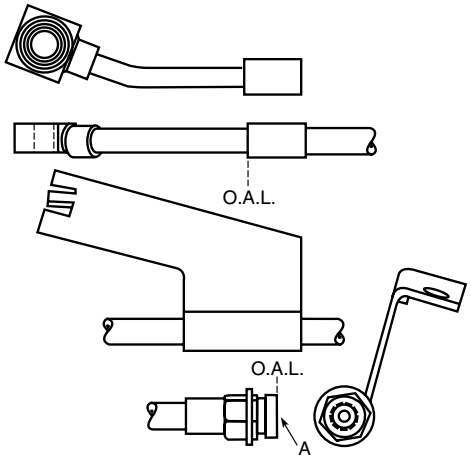

MERITOR NO.	REPLACES WAGNER NO.	FITTING SIZE A	FITTING SIZE B	FITTING SIZE C	BOLT HOLE	O.A.L.
R4577766	F116848	3/8"-24	—	—	3/8"	18 1/4"

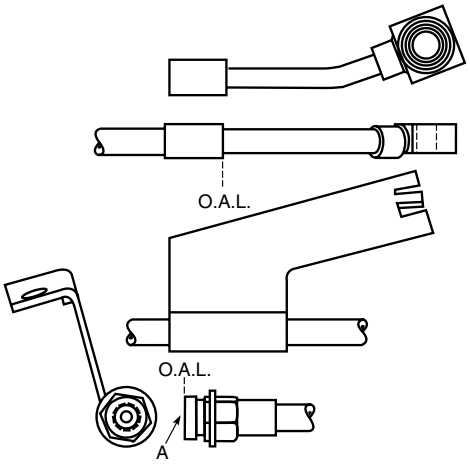

MERITOR NO.	REPLACES WAGNER NO.	FITTING SIZE A	FITTING SIZE B	FITTING SIZE C	BOLT HOLE	O.A.L.
R4577767	F116849	3/8"-24	—	—	3/8"	18 1/4"

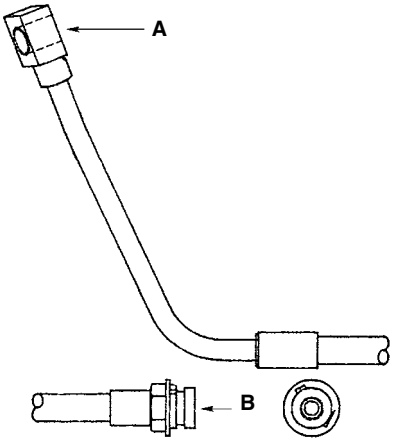

MERITOR NO.	REPLACES WAGNER NO.	FITTING SIZE A	FITTING SIZE B	FITTING SIZE C	BOLT HOLE	O.A.L.
R4577768	F118083	No Thd.	3/8"-14	—	—	19.50"

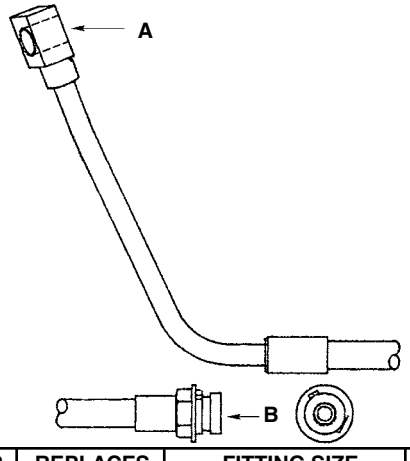

MERITOR NO.	REPLACES WAGNER NO.	FITTING SIZE A	FITTING SIZE B	FITTING SIZE C	BOLT HOLE	O.A.L.
R4577769	F118084	No Thd.	3/8"-24	—	—	19 1/2"

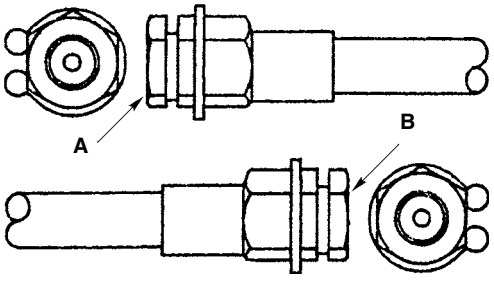

MERITOR NO.	REPLACES WAGNER NO.	FITTING SIZE A	FITTING SIZE B	FITTING SIZE C	BOLT HOLE	O.A.L.
R4577799	F112775 F117138	3/8"-24	3/8"-24	—	—	17 1/4"

HYDRAULIC BRAKE HOSES

Listed in Meritor Part Number Sequence

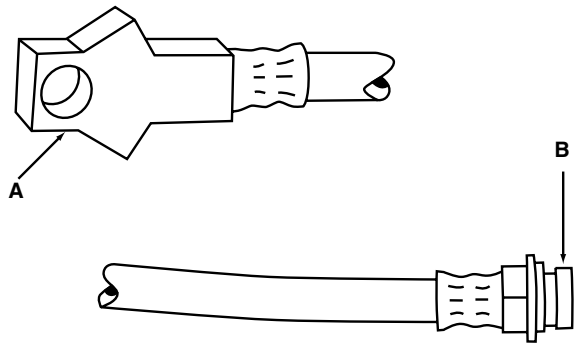

MERITOR NO.	REPLACES WAGNER NO.	FITTING SIZE A	FITTING SIZE B	FITTING SIZE C	BOLT HOLE	O.A.L.
R4577826	F124718	3/8"-24	3/8"-24	—	—	26 1/4"

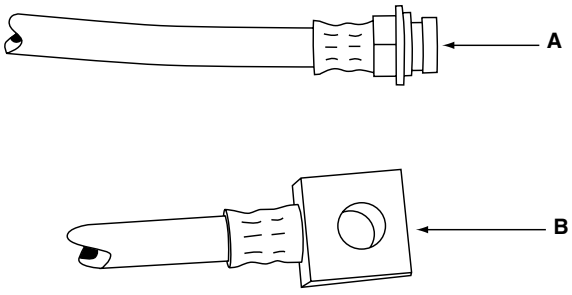

MERITOR NO.	REPLACES WAGNER NO.	FITTING SIZE A	FITTING SIZE B	FITTING SIZE C	BOLT HOLE	O.A.L.
R4577845	F123284	M10x1	No Thd.	—	—	16 3/8"

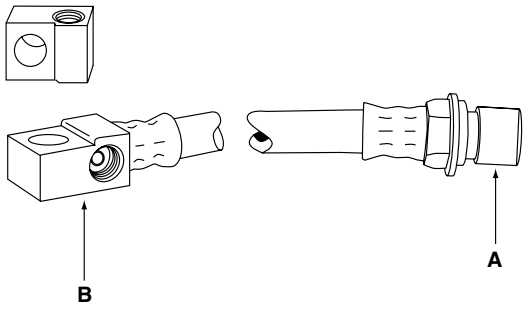

MERITOR NO.	REPLACES WAGNER NO.	FITTING SIZE A	FITTING SIZE B	FITTING SIZE C	BOLT HOLE	O.A.L.
R4577851	F124599	7/16"-24	3/8"-24	—	—	18 7/8"

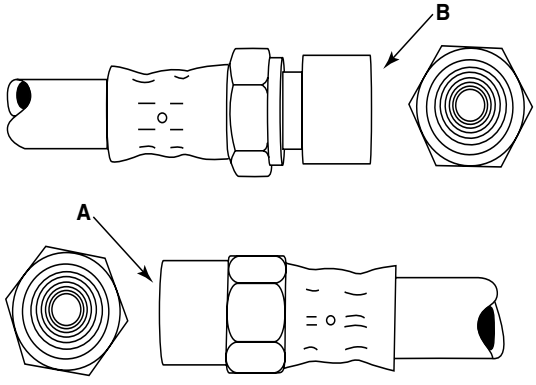

MERITOR NO.	REPLACES WAGNER NO.	FITTING SIZE A	FITTING SIZE B	FITTING SIZE C	BOLT HOLE	O.A.L.
R4577857	—	M10x1	M10x1 6H Thd	—	—	10 1/2"

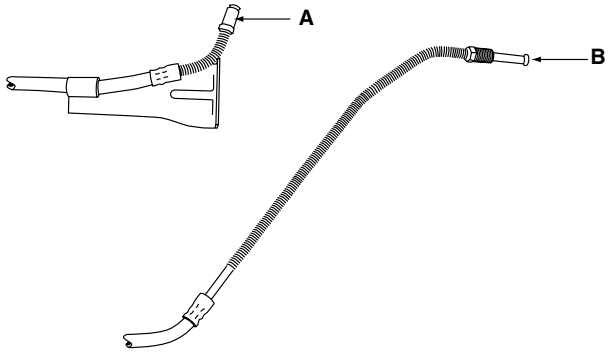

MERITOR NO.	REPLACES WAGNER NO.	FITTING SIZE A	FITTING SIZE B	FITTING SIZE C	BOLT HOLE	O.A.L.
R4577864	F132934	7/16"-24	7/16"-24	—	—	11 1/2"

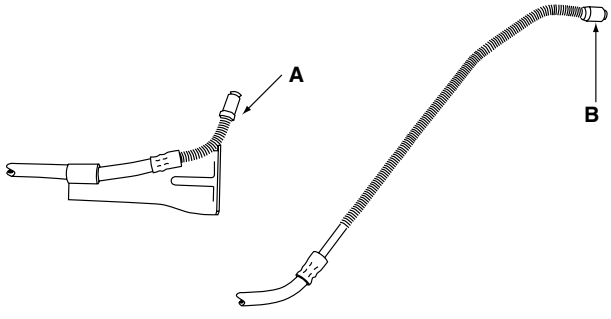

MERITOR NO.	REPLACES WAGNER NO.	FITTING SIZE A	FITTING SIZE B	FITTING SIZE C	BOLT HOLE	O.A.L.
R4577865	F132933	7/16"-24	7/16"-24	—	—	11"

HYDRAULIC BRAKE HOSES

Listed in Meritor Part Number Sequence

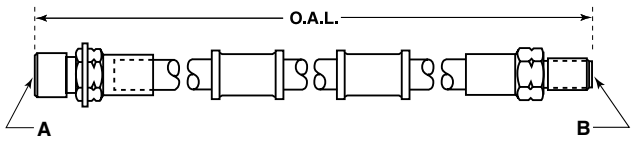

MERITOR NO.	REPLACES WAGNER NO.	FITTING SIZE A	FITTING SIZE B	FITTING SIZE C	BOLT HOLE	O.A.L.
R4577860	—	7/16"-24 UNS-2B	7/16"-24 UNS-2A	—	—	38 15/16" 39 5/16"

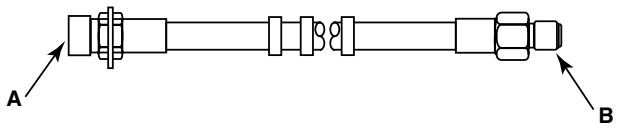

MERITOR NO.	REPLACES WAGNER NO.	FITTING SIZE A	FITTING SIZE B	FITTING SIZE C	BOLT HOLE	O.A.L.
R4577870	—	1/2"-20	7/16"-20	—	—	21 5/16"/ 21 45/64"

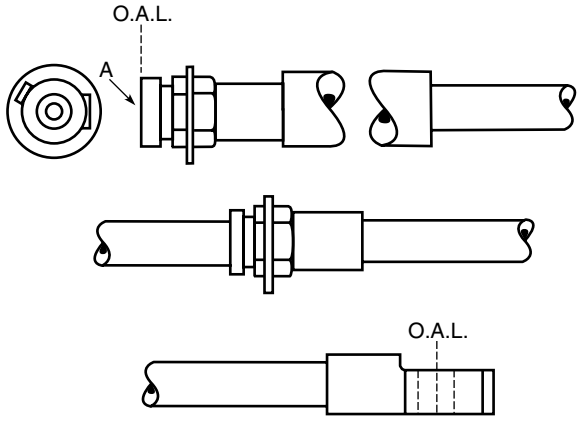

MERITOR NO.	REPLACES WAGNER NO.	FITTING SIZE A	FITTING SIZE B	FITTING SIZE C	BOLT HOLE	O.A.L.
R4577901	F123301	3/8"-24	—	—	3/8"	19 1/4"

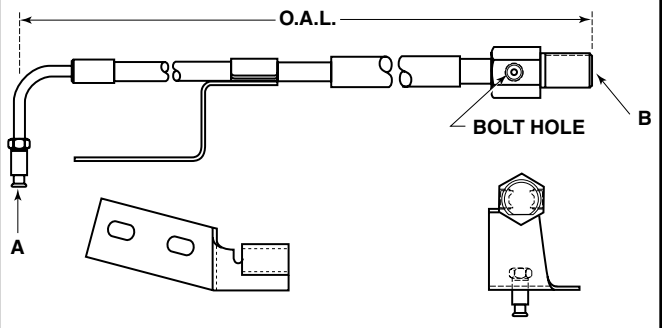

MERITOR NO.	REPLACES WAGNER NO.	FITTING SIZE A	FITTING SIZE B	FITTING SIZE C	BOLT HOLE	O.A.L.
R4577868	F132925	7/16"-24	7/16"-14 UNF-2A	—	7/16"-24 UNS-2B (2 Plcs)	32 31/64" 32 47/64"

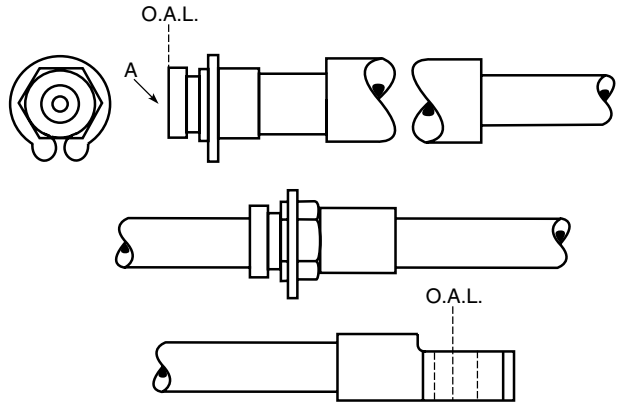

MERITOR NO.	REPLACES WAGNER NO.	FITTING SIZE A	FITTING SIZE B	FITTING SIZE C	BOLT HOLE	O.A.L.
R4577900	F123302	3/8"-24	—	—	3/8"	19 1/4"

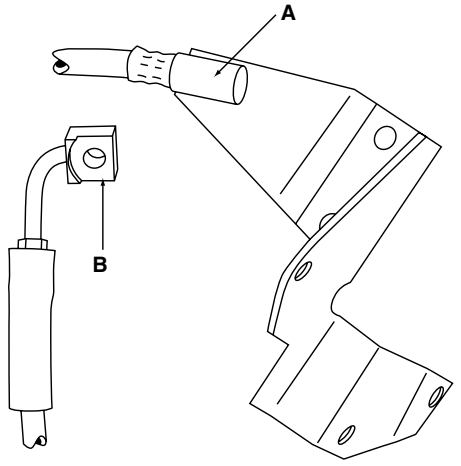

MERITOR NO.	REPLACES WAGNER NO.	FITTING SIZE A	FITTING SIZE B	FITTING SIZE C	BOLT HOLE	O.A.L.
R4577909	F124719	3/8"-24	No Thd.	—	—	19 7/8"

HYDRAULIC BRAKE HOSES

Listed in Meritor Part Number Sequence

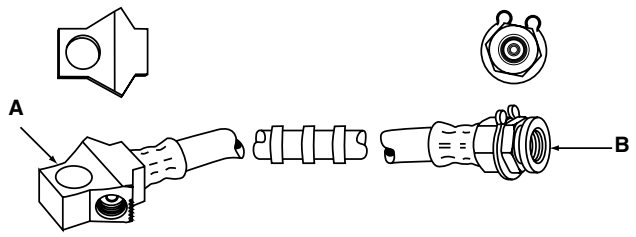

MERITOR NO.	REPLACES WAGNER NO.	FITTING SIZE A	FITTING SIZE B	FITTING SIZE C	BOLT HOLE	O.A.L.
R4577914	F123296	3/8"-24	3/8"-24	—	—	22 13/16"

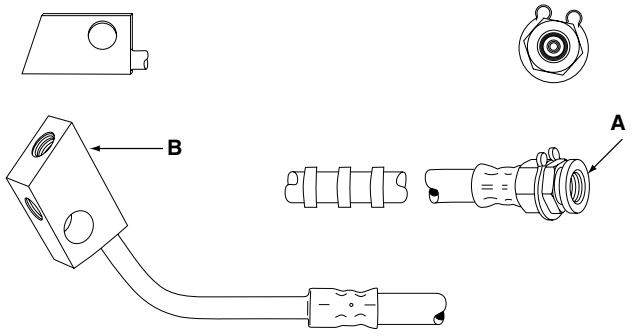

MERITOR NO.	REPLACES WAGNER NO.	FITTING SIZE A	FITTING SIZE B	FITTING SIZE C	BOLT HOLE	O.A.L.
R4577915	F123297	3/8"-24	3/8"-24	—	—	25"

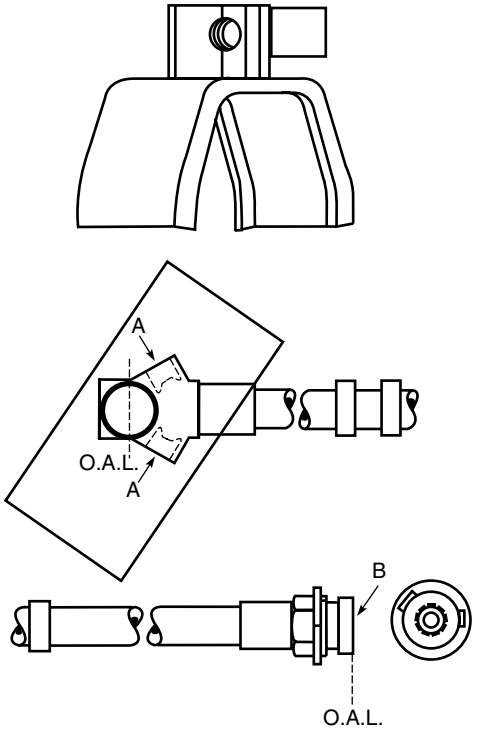

MERITOR NO.	REPLACES WAGNER NO.	FITTING SIZE A	FITTING SIZE B	FITTING SIZE C	BOLT HOLE	O.A.L.
R4577921	F120521	3/8"-24	3/8"-24	—	1/2"	11 3/8"

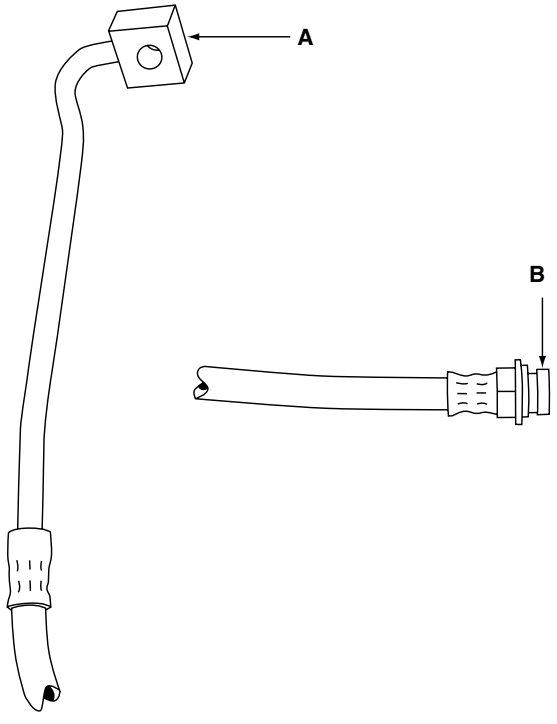

MERITOR NO.	REPLACES WAGNER NO.	FITTING SIZE A	FITTING SIZE B	FITTING SIZE C	BOLT HOLE	O.A.L.
R4577927	F132230	No Thd.	3/8"-24	—	—	20 1/2"

HYDRAULIC BRAKE HOSES

Listed in Meritor Part Number Sequence

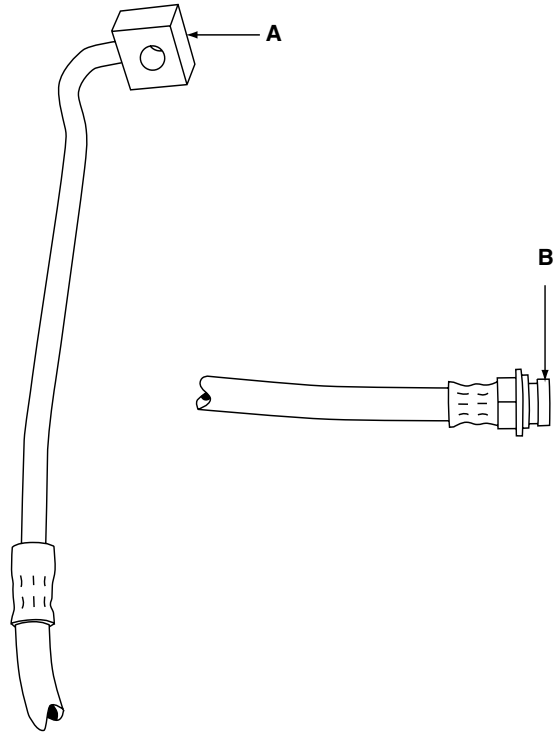

MERITOR NO.	REPLACES WAGNER NO.	FITTING SIZE A	FITTING SIZE B	FITTING SIZE C	BOLT HOLE	O.A.L.
R4577928	F132349	No Thd.	3/8"-24	—	—	21 23/64"

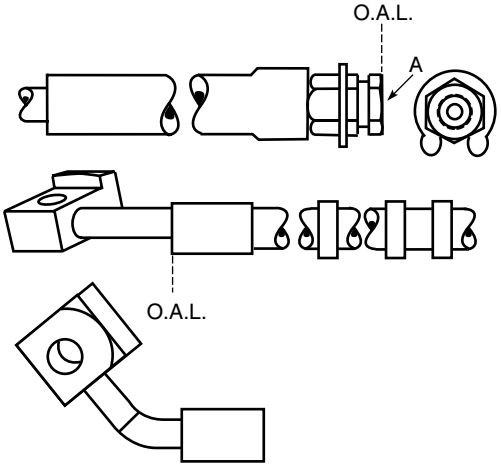

MERITOR NO.	REPLACES WAGNER NO.	FITTING SIZE A	FITTING SIZE B	FITTING SIZE C	BOLT HOLE	O.A.L.
R4578068	F123291	3/8"-24	—	—	3/8"	12 1/2"

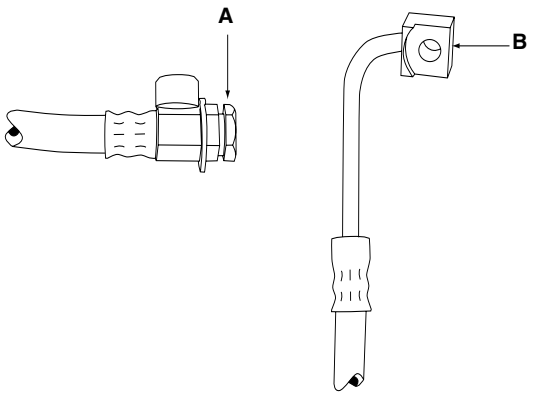

MERITOR NO.	REPLACES WAGNER NO.	FITTING SIZE A	FITTING SIZE B	FITTING SIZE C	BOLT HOLE	O.A.L.
R4578001	F124727	3/8"-24	No Thd.	—	—	23 3/4"

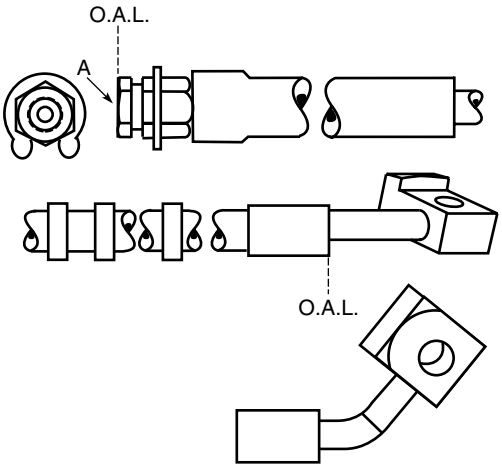

MERITOR NO.	REPLACES WAGNER NO.	FITTING SIZE A	FITTING SIZE B	FITTING SIZE C	BOLT HOLE	O.A.L.
R4578016	F123290	3/8"-24	—	—	3/8"	12 1/2"

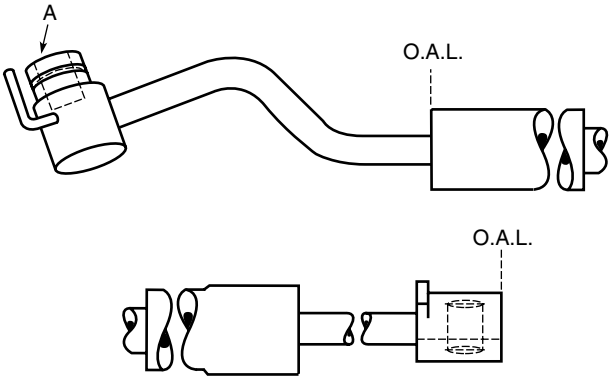

MERITOR NO.	REPLACES WAGNER NO.	FITTING SIZE A	FITTING SIZE B	FITTING SIZE C	BOLT HOLE	O.A.L.
R4578072	F116472	3/8"-24	—	—	3/8"	16 1/4"

HYDRAULIC BRAKE HOSES

Listed in Meritor Part Number Sequence

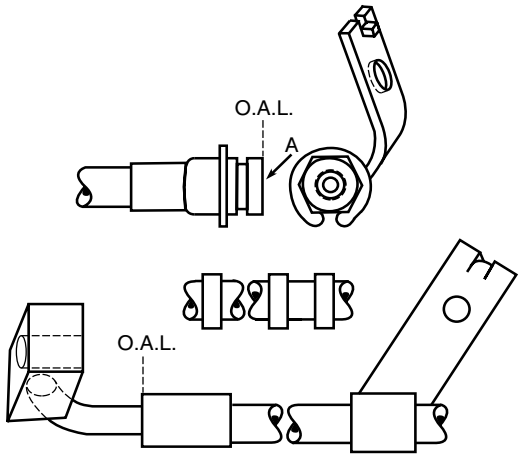

MERITOR NO.	REPLACES WAGNER NO.	FITTING SIZE A	FITTING SIZE B	FITTING SIZE C	BOLT HOLE	O.A.L.
R4578084	F113928	3/8"-24	—	—	7/16"	20 3/16"

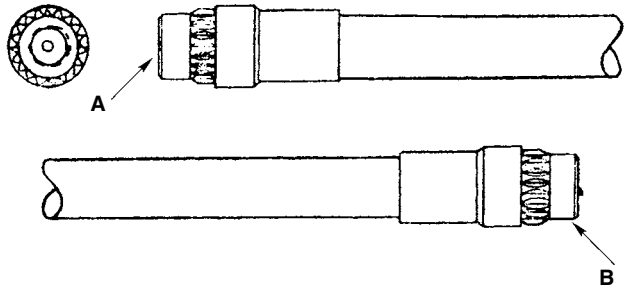

MERITOR NO.	REPLACES WAGNER NO.	FITTING SIZE A	FITTING SIZE B	FITTING SIZE C	BOLT HOLE	O.A.L.
R4578085	F113980 F118546	3/8"-24	3/8"-24	—	—	21 7/8"

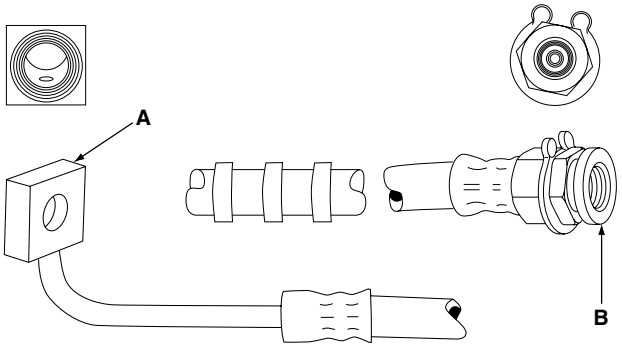

MERITOR NO.	REPLACES WAGNER NO.	FITTING SIZE A	FITTING SIZE B	FITTING SIZE C	BOLT HOLE	O.A.L.
R4578117	—	—	—	—	—	—

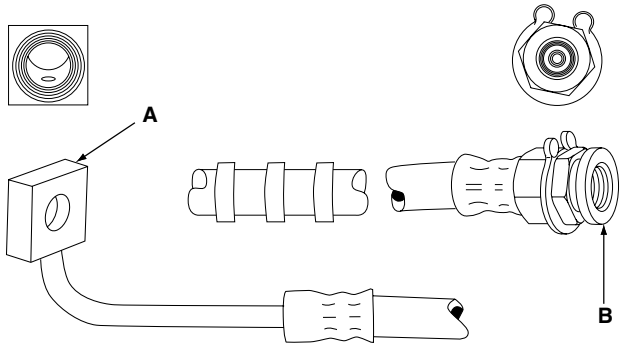

MERITOR NO.	REPLACES WAGNER NO.	FITTING SIZE A	FITTING SIZE B	FITTING SIZE C	BOLT HOLE	O.A.L.
R4578118	—	—	—	—	—	—

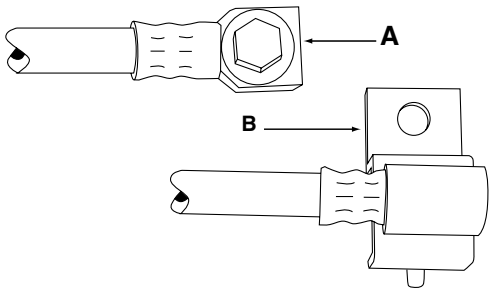

MERITOR NO.	REPLACES WAGNER NO.	FITTING SIZE A	FITTING SIZE B	FITTING SIZE C	BOLT HOLE	O.A.L.
R4578129	—	No Thd.	3/8"-24	—	—	19 7/8"

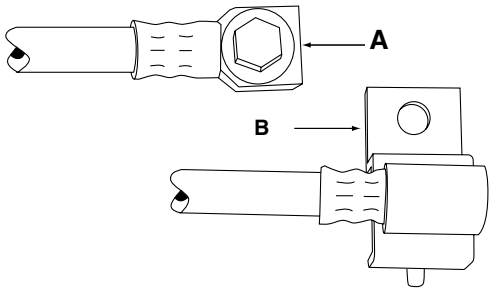

MERITOR NO.	REPLACES WAGNER NO.	FITTING SIZE A	FITTING SIZE B	FITTING SIZE C	BOLT HOLE	O.A.L.
R4578130	F132160	No Thd.	3/8"-24	—	—	19 7/8"

HYDRAULIC BRAKE HOSES

Listed in Meritor Part Number Sequence

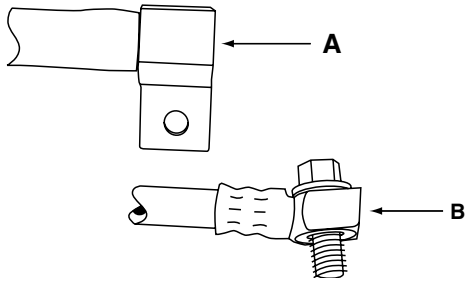

MERITOR NO.	REPLACES WAGNER NO.	FITTING SIZE A	FITTING SIZE B	FITTING SIZE C	BOLT HOLE	O.A.L.
R4578132	F132148	3/8"-24	No Thd.	—	—	23"

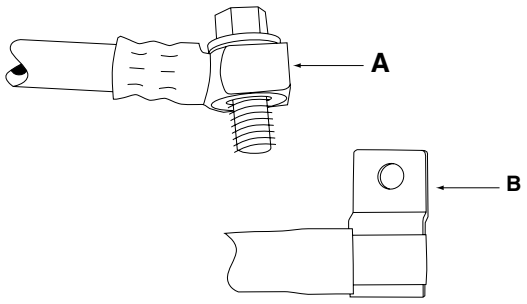

MERITOR NO.	REPLACES WAGNER NO.	FITTING SIZE A	FITTING SIZE B	FITTING SIZE C	BOLT HOLE	O.A.L.
R4578133	F132140	No Thd.	3/8"-24	—	—	21"

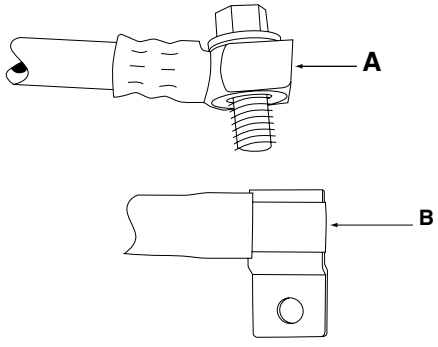

MERITOR NO.	REPLACES WAGNER NO.	FITTING SIZE A	FITTING SIZE B	FITTING SIZE C	BOLT HOLE	O.A.L.
R4578134	—	No Thd.	3/8"-24	—	—	20 1/4"

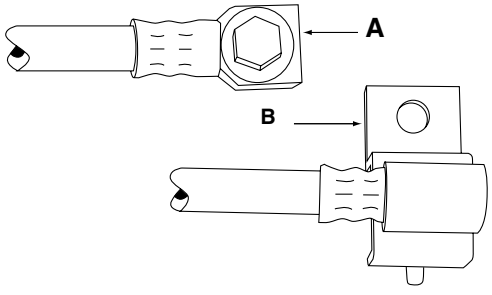

MERITOR NO.	REPLACES WAGNER NO.	FITTING SIZE A	FITTING SIZE B	FITTING SIZE C	BOLT HOLE	O.A.L.
R4578135	F132161	No Thd.	3/8"-24	—	—	10 1/2"

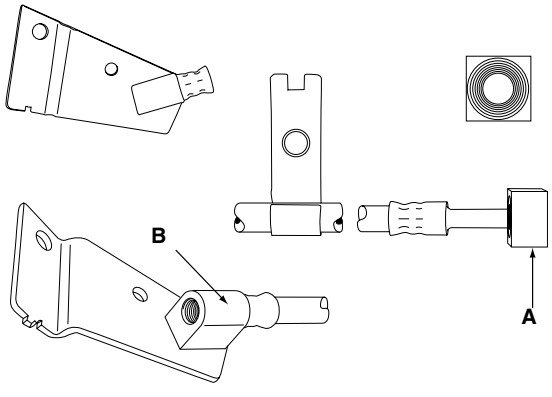

MERITOR NO.	REPLACES WAGNER NO.	FITTING SIZE A	FITTING SIZE B	FITTING SIZE C	BOLT HOLE	O.A.L.
R4578136	F132034	—	—	—	—	9 1/4"

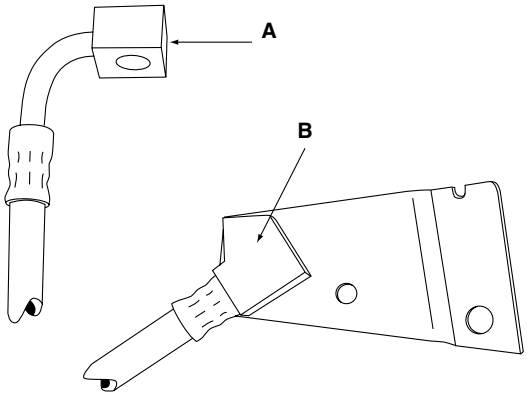

MERITOR NO.	REPLACES WAGNER NO.	FITTING SIZE A	FITTING SIZE B	FITTING SIZE C	BOLT HOLE	O.A.L.
R4578137	F132033	No Thd.	3/8"-24	—	—	21 1/8"

HYDRAULIC BRAKE HOSES

Listed in Meritor Part Number Sequence

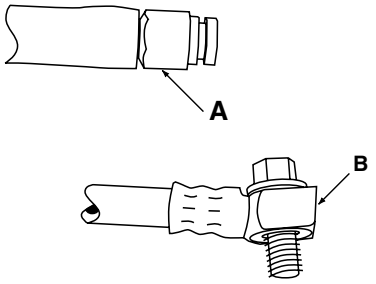

MERITOR NO.	REPLACES WAGNER NO.	FITTING SIZE A	FITTING SIZE B	FITTING SIZE C	BOLT HOLE	O.A.L.
R4578144	F132296	3/8"-24	No Thd.	—	—	19 1/2"

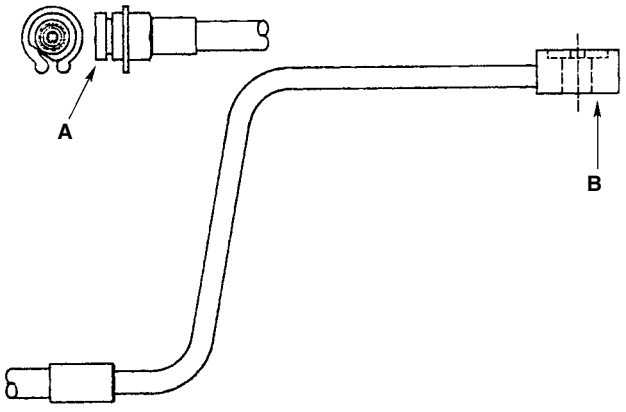

MERITOR NO.	REPLACES WAGNER NO.	FITTING SIZE A	FITTING SIZE B	FITTING SIZE C	BOLT HOLE	O.A.L.
R4578159	F120859	3/8"-24	No Thd.	—	—	24 5/8"

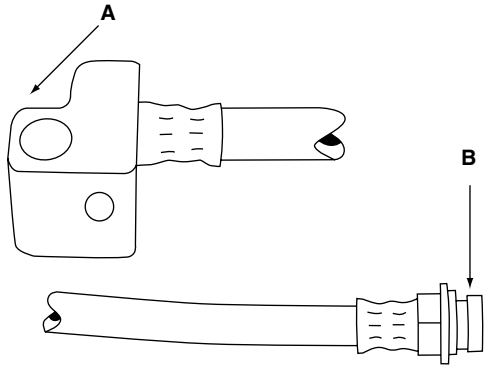

MERITOR NO.	REPLACES WAGNER NO.	FITTING SIZE A	FITTING SIZE B	FITTING SIZE C	BOLT HOLE	O.A.L.
R4578166	F128683	3/8"-24	3/8"-24	—	—	17 1/4"

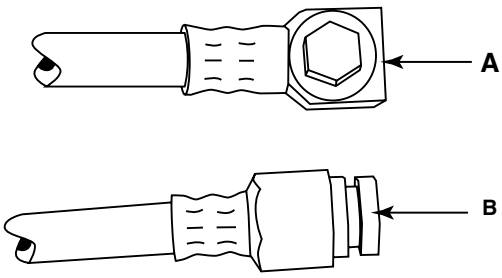

MERITOR NO.	REPLACES WAGNER NO.	FITTING SIZE A	FITTING SIZE B	FITTING SIZE C	BOLT HOLE	O.A.L.
R4578145	F132295	No Thd.	3/8"-24	—	—	16 1/8"

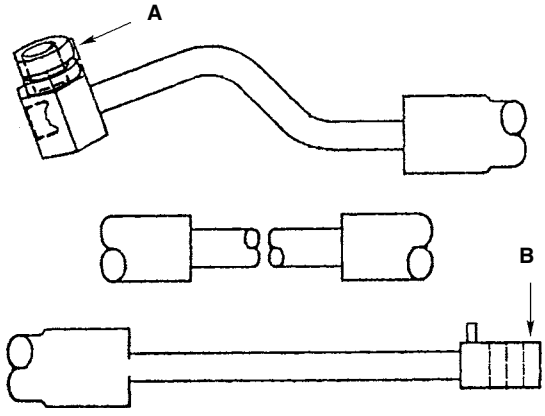

MERITOR NO.	REPLACES WAGNER NO.	FITTING SIZE A	FITTING SIZE B	FITTING SIZE C	BOLT HOLE	O.A.L.
R4578165	F120536	3/8"-24	No Thd.	—	—	20 3/4"

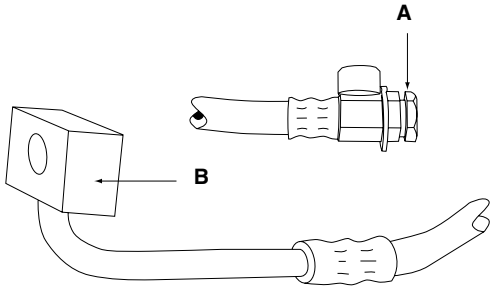

MERITOR NO.	REPLACES WAGNER NO.	FITTING SIZE A	FITTING SIZE B	FITTING SIZE C	BOLT HOLE	O.A.L.
R4578169	F124726	3/8"-24	No Thd.	—	—	18 3/4"

HYDRAULIC BRAKE HOSES

Listed in Meritor Part Number Sequence

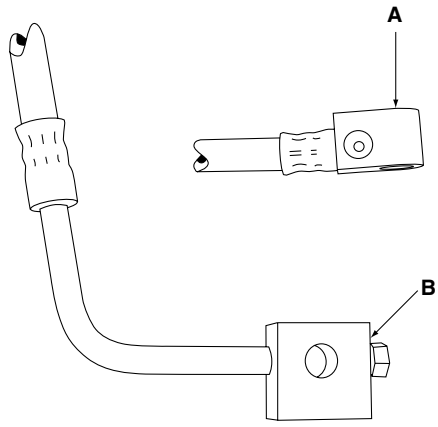

MERITOR NO.	REPLACES WAGNER NO.	FITTING SIZE A	FITTING SIZE B	FITTING SIZE C	BOLT HOLE	O.A.L.
R4578182	F130432	3/8"-24	No Thd.	—	—	12 1/8"

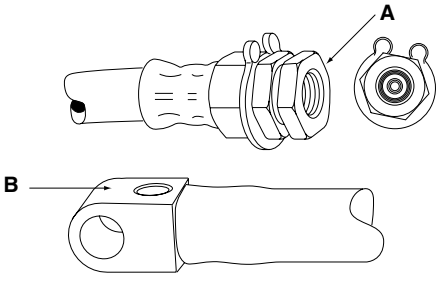

MERITOR NO.	REPLACES WAGNER NO.	FITTING SIZE A	FITTING SIZE B	FITTING SIZE C	BOLT HOLE	O.A.L.
R4578184	F130434	—	—	—	—	20 3/4"

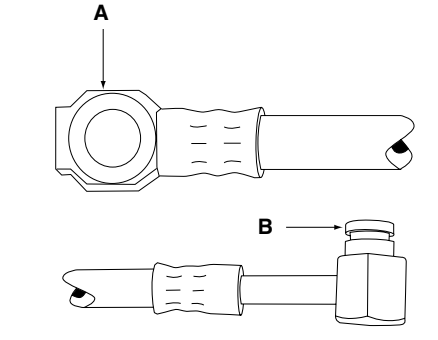

MERITOR NO.	REPLACES WAGNER NO.	FITTING SIZE A	FITTING SIZE B	FITTING SIZE C	BOLT HOLE	O.A.L.
R4578188	F130420	—	—	—	—	9 23/32"

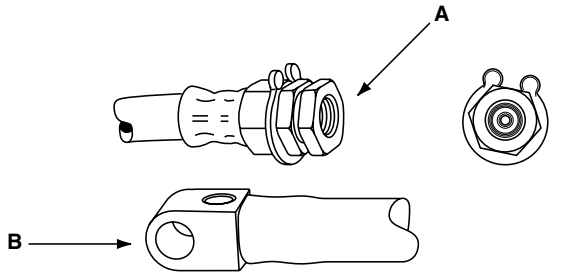

MERITOR NO.	REPLACES WAGNER NO.	FITTING SIZE A	FITTING SIZE B	FITTING SIZE C	BOLT HOLE	O.A.L.
R4578183	F130426	—	—	—	—	11 13/32"

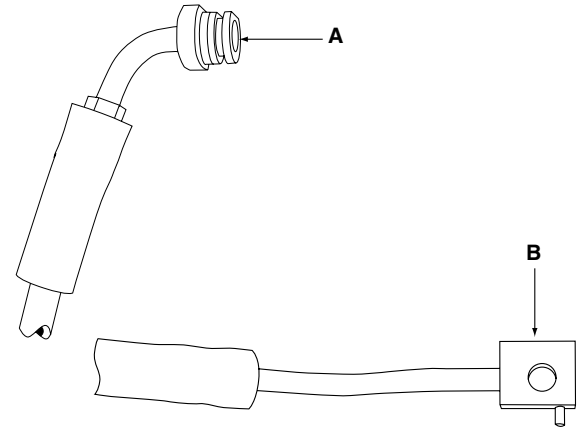

MERITOR NO.	REPLACES WAGNER NO.	FITTING SIZE A	FITTING SIZE B	FITTING SIZE C	BOLT HOLE	O.A.L.
R4578187	F132298	3/8"-24	No Thd.	—	—	20 3/4"

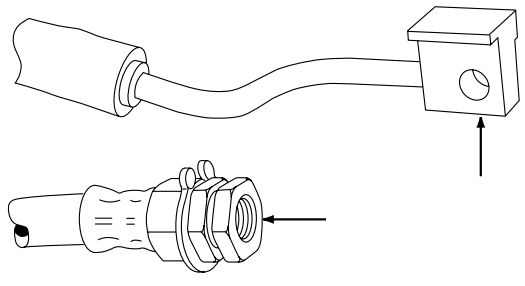

MERITOR NO.	REPLACES WAGNER NO.	FITTING SIZE A	FITTING SIZE B	FITTING SIZE C	BOLT HOLE	O.A.L.
R4578206	F132318	No Thd.	3/8"-24	—	—	18 3/8"

HYDRAULIC BRAKE HOSES

Listed in Meritor Part Number Sequence

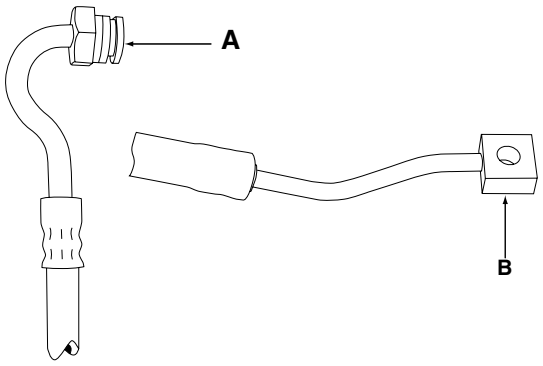

MERITOR NO.	REPLACES WAGNER NO.	FITTING SIZE A	FITTING SIZE B	FITTING SIZE C	BOLT HOLE	O.A.L.
R4578208	F132195	3/8"-24	No Thd.	—	—	24"

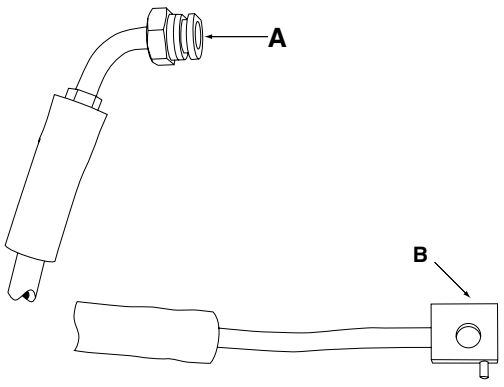

MERITOR NO.	REPLACES WAGNER NO.	FITTING SIZE A	FITTING SIZE B	FITTING SIZE C	BOLT HOLE	O.A.L.
R4578209	F133813	3/8"-24	No Thd.	—	—	24 1/4"

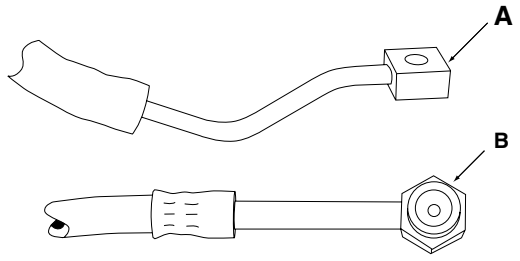

MERITOR NO.	REPLACES WAGNER NO.	FITTING SIZE A	FITTING SIZE B	FITTING SIZE C	BOLT HOLE	O.A.L.
R4578210	F132196	No Thd.	3/8"-24	—	—	13 1/4"

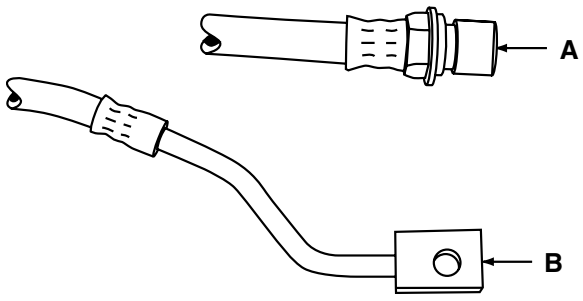

MERITOR NO.	REPLACES WAGNER NO.	FITTING SIZE A	FITTING SIZE B	FITTING SIZE C	BOLT HOLE	O.A.L.
R4578218	F103312	7/16"-24	7/16"-24	—	—	31 5/16"

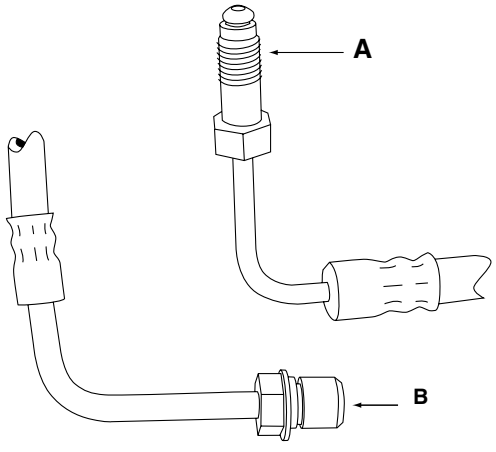

MERITOR NO.	REPLACES WAGNER NO.	FITTING SIZE A	FITTING SIZE B	FITTING SIZE C	BOLT HOLE	O.A.L.
R4578219	F132413	3/8"-24	No Thd.	—	—	20 3/4"

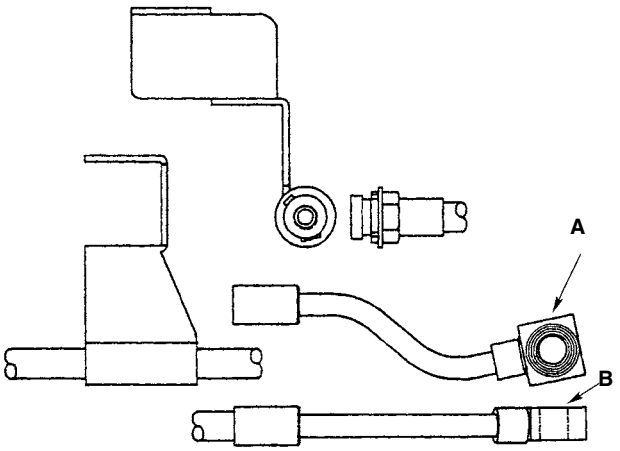

MERITOR NO.	REPLACES WAGNER NO.	FITTING SIZE A	FITTING SIZE B	FITTING SIZE C	BOLT HOLE	O.A.L.
R4578224	F116850 F120541	No Thd.	3/8"-24	—	—	25 3/4"

HYDRAULIC BRAKE HOSES

Listed in Meritor Part Number Sequence

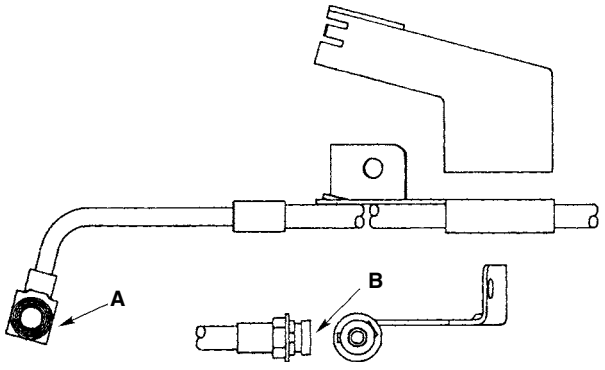

MERITOR NO.	REPLACES WAGNER NO.	FITTING SIZE A	FITTING SIZE B	FITTING SIZE C	BOLT HOLE	O.A.L.
R4578226	F123305	No Thd.	3/8"-24	—	—	22 1/2"

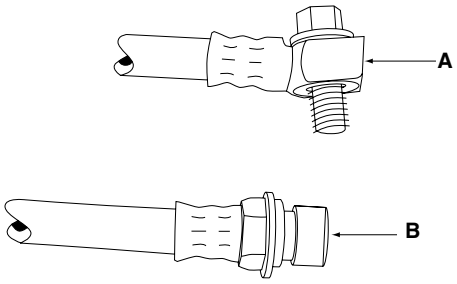

MERITOR NO.	REPLACES WAGNER NO.	FITTING SIZE A	FITTING SIZE B	FITTING SIZE C	BOLT HOLE	O.A.L.
R4578227	F124600	No Thd.	3/8"-24	.400"/ .405"	—	25 7/8"

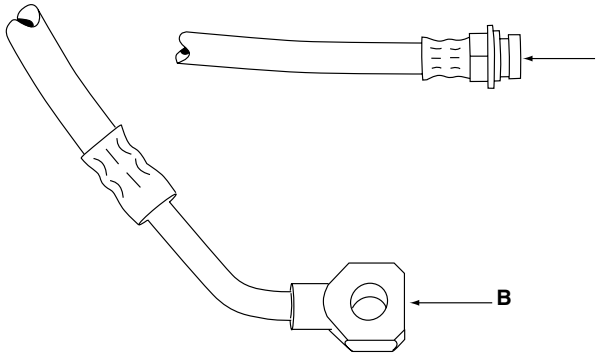

MERITOR NO.	REPLACES WAGNER NO.	FITTING SIZE A	FITTING SIZE B	FITTING SIZE C	BOLT HOLE	O.A.L.
R4578258	F133852	—	—	—	—	18 3/4"

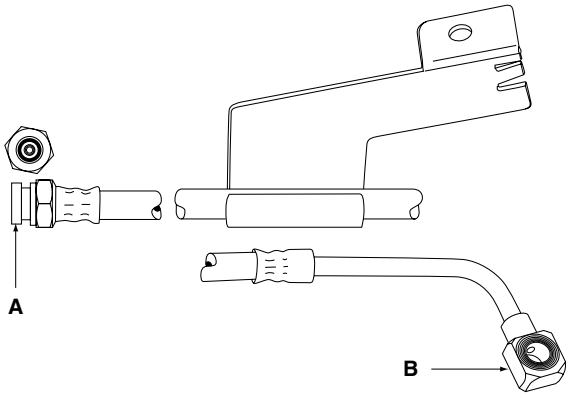

MERITOR NO.	REPLACES WAGNER NO.	FITTING SIZE A	FITTING SIZE B	FITTING SIZE C	BOLT HOLE	O.A.L.
R4578259	F133851	—	—	—	—	15 1/2"

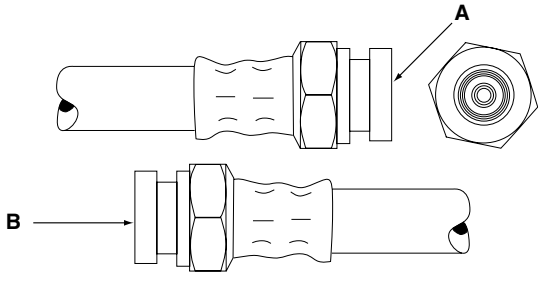

MERITOR NO.	REPLACES WAGNER NO.	FITTING SIZE A	FITTING SIZE B	FITTING SIZE C	BOLT HOLE	O.A.L.
R4578267	F123791	M10x1	M10x1	—	—	17 3/4"

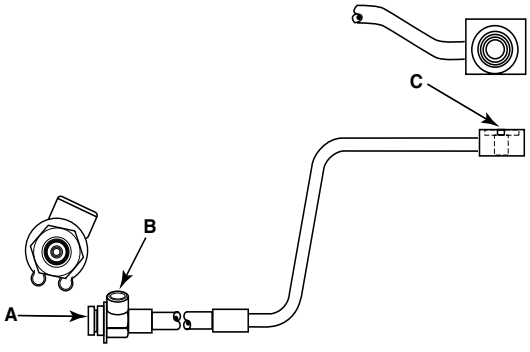

MERITOR NO.	REPLACES WAGNER NO.	FITTING SIZE A	FITTING SIZE B	FITTING SIZE C	BOLT HOLE	O.A.L.
R4578303	F133396 F124728	3/8"-24	3/8"-24.	3/8" No. Thd.	—	23 7/32"

HYDRAULIC BRAKE HOSES

Listed in Meritor Part Number Sequence

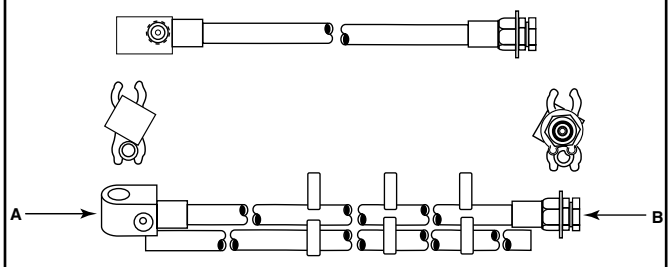

MERITOR NO.	REPLACES WAGNER NO.	FITTING SIZE A	FITTING SIZE B	FITTING SIZE C	BOLT HOLE	O.A.L.
R4578305	F133837	3/8"-24	3/8"-24	—	—	20 3/4"

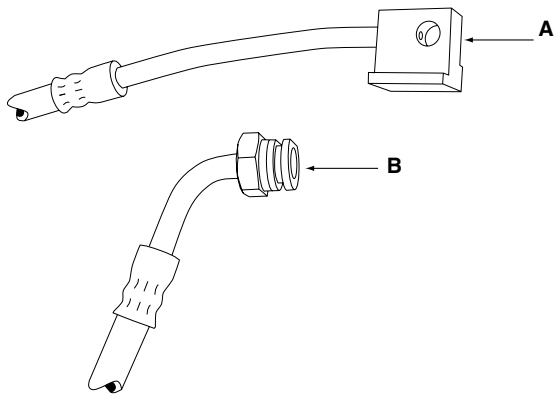

MERITOR NO.	REPLACES WAGNER NO.	FITTING SIZE A	FITTING SIZE B	FITTING SIZE C	BOLT HOLE	O.A.L.
R4578313	—	No Thd.	3/8"-24	—	—	27 3/4"

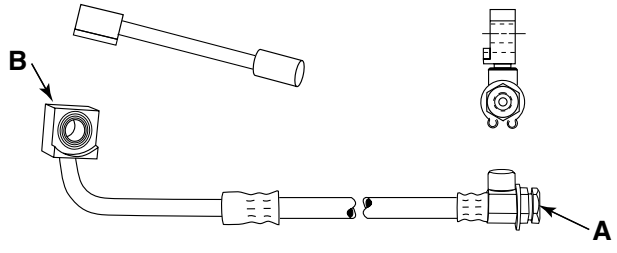

MERITOR NO.	REPLACES WAGNER NO.	FITTING SIZE A	FITTING SIZE B	FITTING SIZE C	BOLT HOLE	O.A.L.
R4578325	F132771	5/8" Ext. 3/8"-24 Int.	No. Thd.	—	—	24"

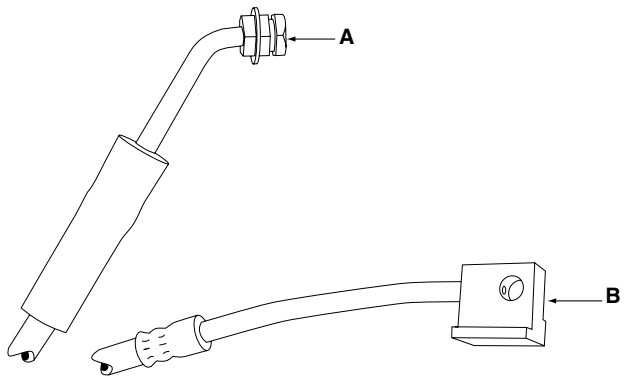

MERITOR NO.	REPLACES WAGNER NO.	FITTING SIZE A	FITTING SIZE B	FITTING SIZE C	BOLT HOLE	O.A.L.
R4578312	—	3/8"-24	No Thd.	—	—	16"

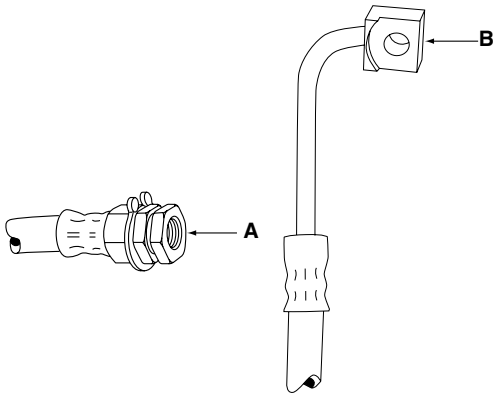

MERITOR NO.	REPLACES WAGNER NO.	FITTING SIZE A	FITTING SIZE B	FITTING SIZE C	BOLT HOLE	O.A.L.
R4578324	F132770	3/8"-24	No Thd.	—	—	22 3/4"

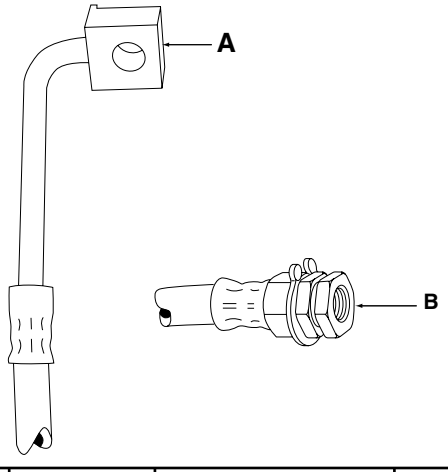

MERITOR NO.	REPLACES WAGNER NO.	FITTING SIZE A	FITTING SIZE B	FITTING SIZE C	BOLT HOLE	O.A.L.
R4578326	F132753	No Thd.	3/8"-24	—	—	13"

HYDRAULIC BRAKE HOSES

Listed in Meritor Part Number Sequence

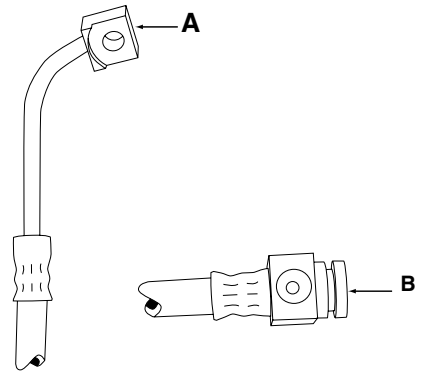

MERITOR NO.	REPLACES WAGNER NO.	FITTING SIZE A	FITTING SIZE B	FITTING SIZE C	BOLT HOLE	O.A.L.
R4578327	F132752	No Thd.	3/8"-24	—	—	15 1/2"

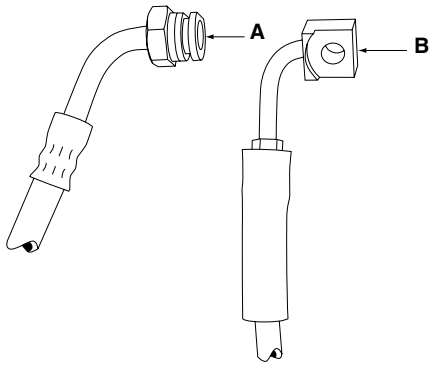

MERITOR NO.	REPLACES WAGNER NO.	FITTING SIZE A	FITTING SIZE B	FITTING SIZE C	BOLT HOLE	O.A.L.
R4578331	F132773	3/8"-24	No Thd.	—	—	15"

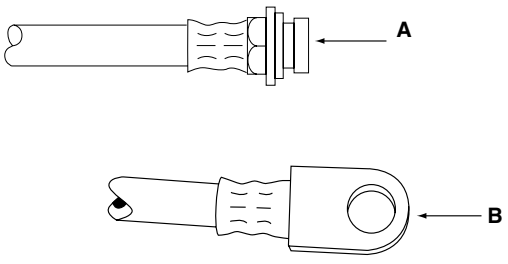

MERITOR NO.	REPLACES WAGNER NO.	FITTING SIZE A	FITTING SIZE B	FITTING SIZE C	BOLT HOLE	O.A.L.
R4578332	F132772	3/8"-24	No Thd.	—	—	20 1/4"

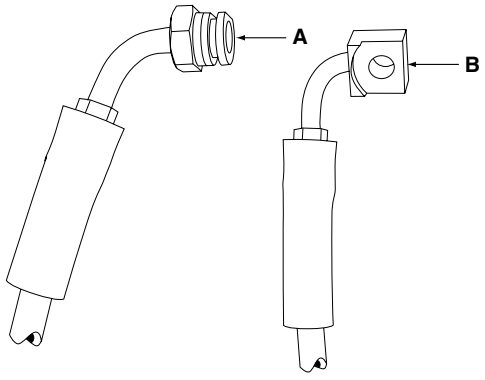

MERITOR NO.	REPLACES WAGNER NO.	FITTING SIZE A	FITTING SIZE B	FITTING SIZE C	BOLT HOLE	O.A.L.
R4578332	—	3/8"-24	No Thd.	—	—	8"

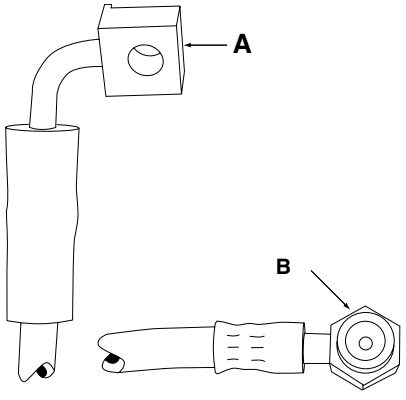

MERITOR NO.	REPLACES WAGNER NO.	FITTING SIZE A	FITTING SIZE B	FITTING SIZE C	BOLT HOLE	O.A.L.
R4578333	F132754	No Thd.	3/8"-24	—	—	15 1/4"

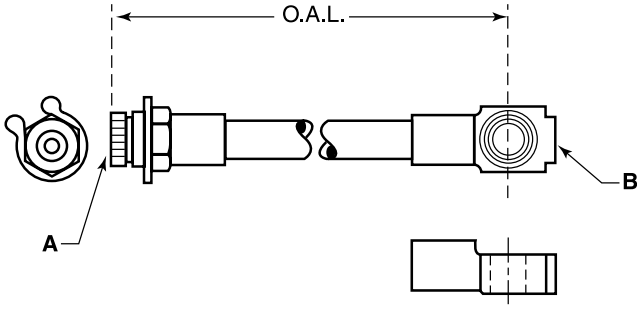

MERITOR NO.	REPLACES WAGNER NO.	FITTING SIZE A	FITTING SIZE B	FITTING SIZE C	BOLT HOLE	O.A.L.
R4578357	—	3/8"-24 Int.	No Thd.	—	3/8"	11 1/8"

HYDRAULIC BRAKE HOSES

Listed in Meritor Part Number Sequence

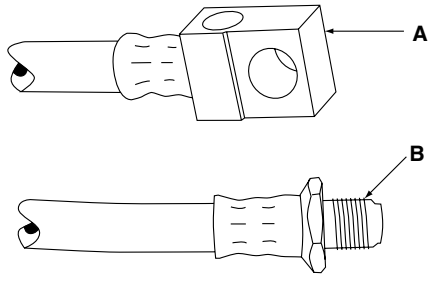

MERITOR NO.	REPLACES WAGNER NO.	FITTING SIZE A	FITTING SIZE B	FITTING SIZE C	BOLT HOLE	O.A.L.
R4578360	F123303	7/16"-24 Int. 5/8"-18 Ext.	3/8"-24	—	—	22 3/8"

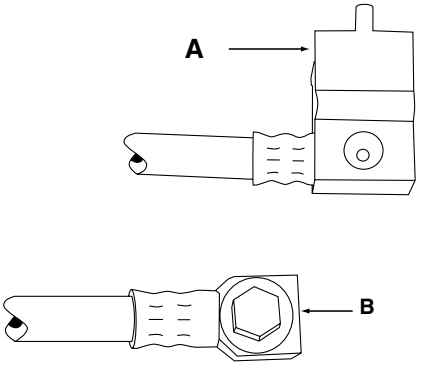

MERITOR NO.	REPLACES WAGNER NO.	FITTING SIZE A	FITTING SIZE B	FITTING SIZE C	BOLT HOLE	O.A.L.
R4578387	F132146	3/8"-24	No Thd.	—	—	39 1/4"

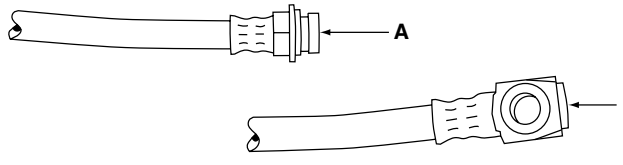

MERITOR NO.	REPLACES WAGNER NO.	FITTING SIZE A	FITTING SIZE B	FITTING SIZE C	BOLT HOLE	O.A.L.
R4578403	—	3/8"-24	No Thd.	—	—	15 1/2"

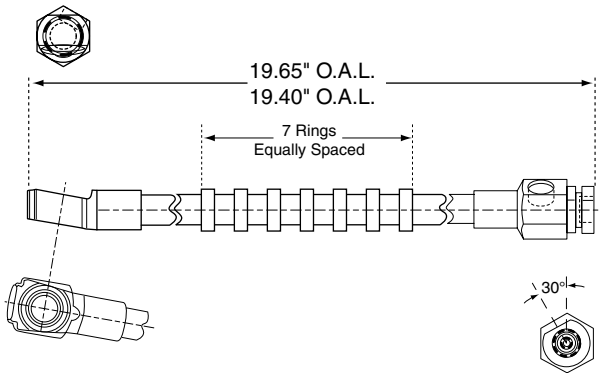

MERITOR NO.	REPLACES	FITTING SIZE A	FITTING SIZE B	FITTING SIZE C	BOLT HOLE	O.A.L.
R4578386	380747	No Thd.	3/8"-24 UNF-2B Thd.	3/4" Hex	39/64"	19.65" 19.40"

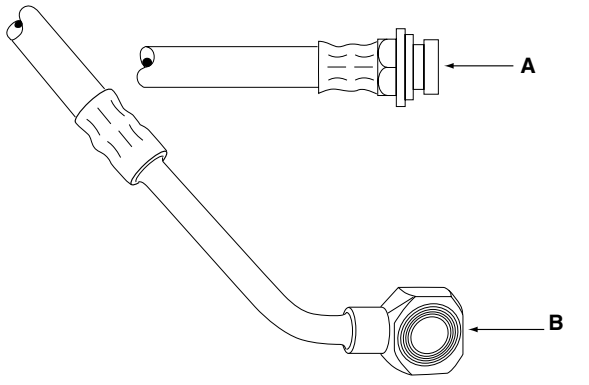

MERITOR NO.	REPLACES WAGNER NO.	FITTING SIZE A	FITTING SIZE B	FITTING SIZE C	BOLT HOLE	O.A.L.
R4578392	—	3/8"-24	No Thd.	—	—	21 1/4"

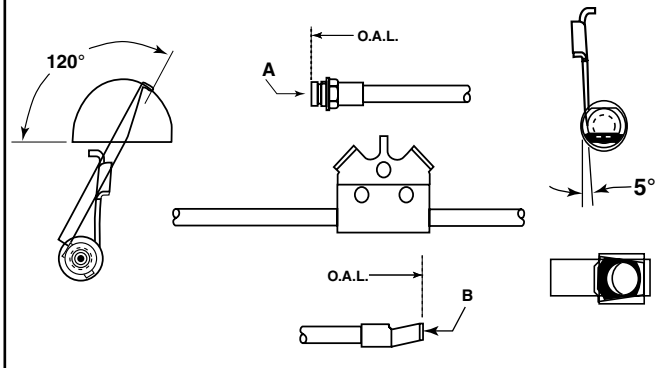

MERITOR NO.	REPLACES WAGNER NO.	FITTING SIZE A	FITTING SIZE B	FITTING SIZE C	BOLT HOLE	O.A.L.
R4578403	—	3/8"-24 UNF-2B	13/32"	—	—	25 3/8" 25 5/8"

HYDRAULIC BRAKE HOSES

Listed in Meritor Part Number Sequence

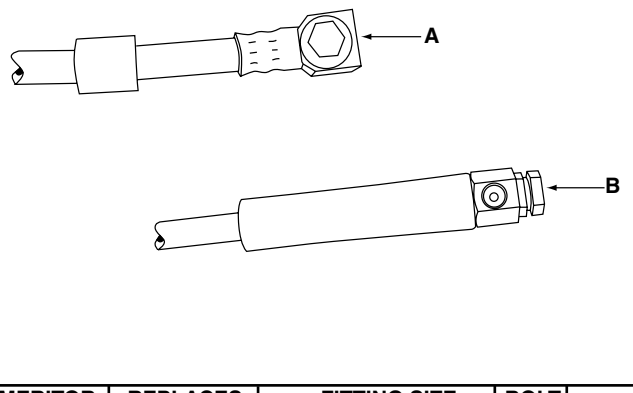

MERITOR NO.	REPLACES WAGNER NO.	FITTING SIZE A	FITTING SIZE B	FITTING SIZE C	BOLT HOLE	O.A.L.
R4578410	—	No Thd.	3/8"-24	—	—	15 1/4"

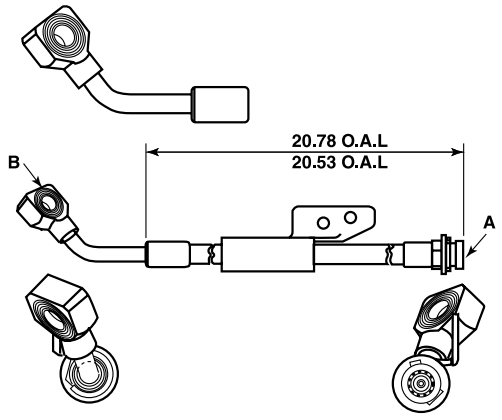

MERITOR NO.	REPLACES WAGNER NO.	FITTING SIZE A	FITTING SIZE B	FITTING SIZE C	BOLT HOLE	O.A.L.
R4578438	—	3/8"-24 UNF-2B	13/32" 25/64"	—	—	20 17/32" 20 25/32"

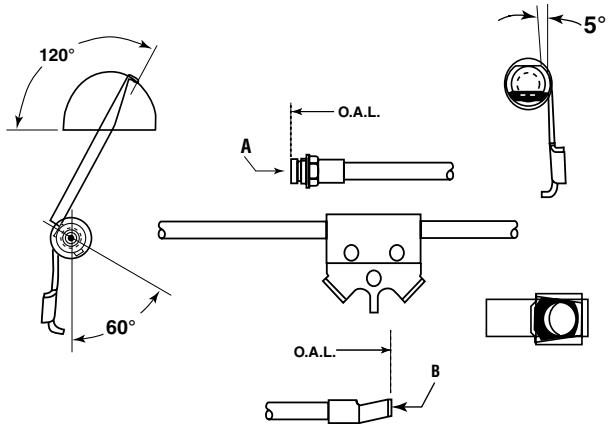

MERITOR NO.	REPLACES WAGNER NO.	FITTING SIZE A	FITTING SIZE B	FITTING SIZE C	BOLT HOLE	O.A.L.
R4578460	—	3/8"-24 UNF-2B	13/32"	—	—	25 3/8" 25 5/8"

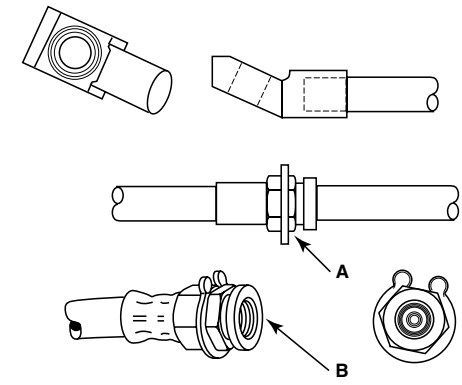

MERITOR NO.	REPLACES WAGNER NO.	FITTING SIZE A	FITTING SIZE B	FITTING SIZE C	BOLT HOLE	O.A.L.
R4578437	F124601	3/8"-24	3/8"-24	—	—	25 7/8"

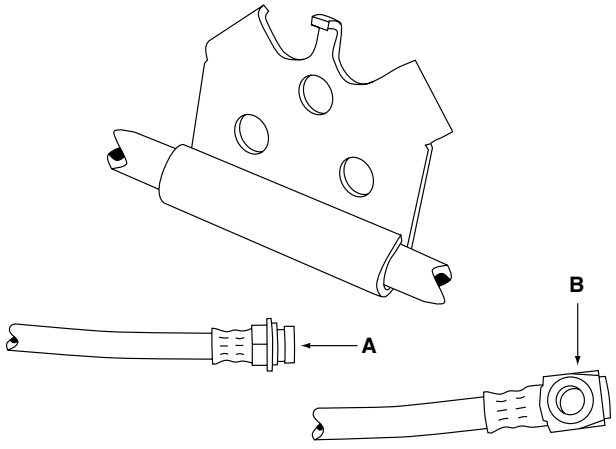

MERITOR NO.	REPLACES WAGNER NO.	FITTING SIZE A	FITTING SIZE B	FITTING SIZE C	BOLT HOLE	O.A.L.
R4578460	—	3/8"-24	No Thd.	—	—	15 1/4"

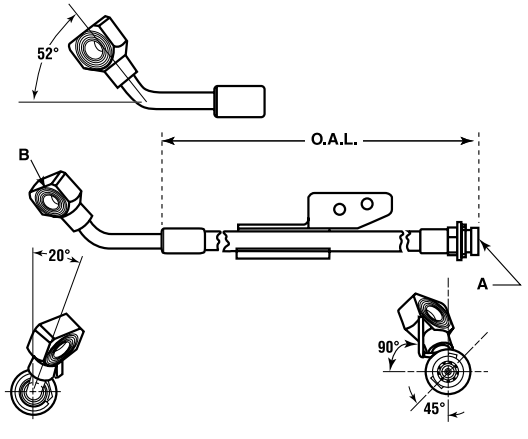

MERITOR NO.	REPLACES WAGNER NO.	FITTING SIZE A	FITTING SIZE B	FITTING SIZE C	BOLT HOLE	O.A.L.
R4578480	—	3/8"-24 UNF-2B	13/32" 25/64"	—	—	20 21/64" 20 5/64"

HYDRAULIC BRAKE HOSES

Listed in Meritor Part Number Sequence

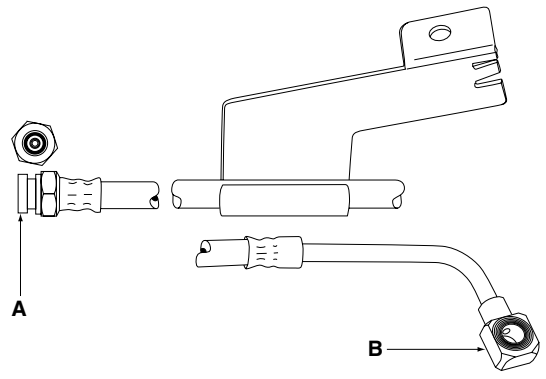

MERITOR NO.	REPLACES WAGNER NO.	FITTING SIZE A	FITTING SIZE B	FITTING SIZE C	BOLT HOLE	O.A.L.
R4578548	F123304	3/8"-24	No Thd.	—	—	23 1/4"

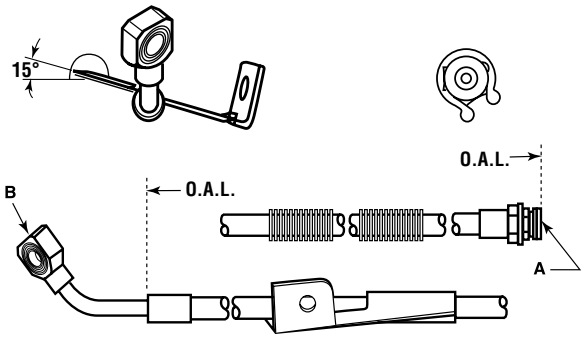

MERITOR NO.	REPLACES WAGNER NO.	FITTING SIZE A	FITTING SIZE B	FITTING SIZE C	BOLT HOLE	O.A.L.
R4578774	—	3/8"-24 UNF-2B	13/32" 25/64"	—	—	21 37/64" 21 21/64"

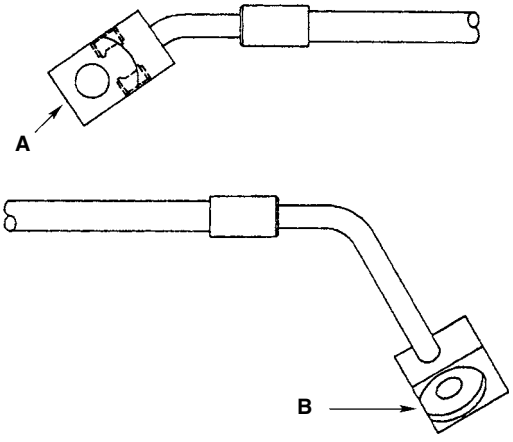

MERITOR NO.	REPLACES WAGNER NO.	FITTING SIZE A	FITTING SIZE B	FITTING SIZE C	BOLT HOLE	O.A.L.
R4578618	F120872	3/8"-24	No Thd.	—	—	21 1/2"

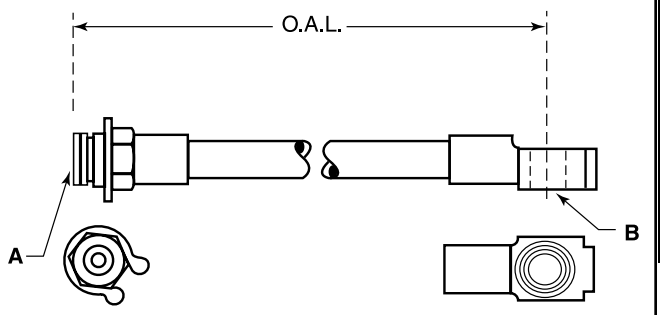

MERITOR NO.	REPLACES WAGNER NO.	FITTING SIZE A	FITTING SIZE B	FITTING SIZE C	BOLT HOLE	O.A.L.
R4578557	F132988	3/8"-24 Int.	No Thd.	—	3/8"	9 1/2"

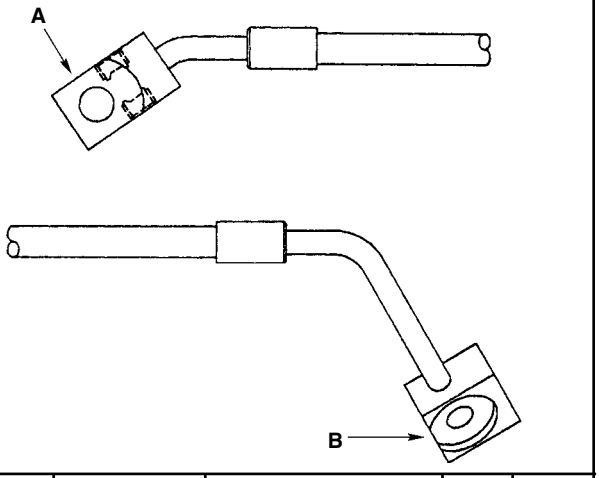

MERITOR NO.	REPLACES WAGNER NO.	FITTING SIZE A	FITTING SIZE B	FITTING SIZE C	BOLT HOLE	O.A.L.
R4578610	F128632	3/8"-24	3/8"-24	—	—	21 1/8"

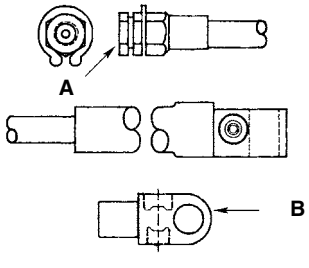

MERITOR NO.	REPLACES WAGNER NO.	FITTING SIZE A	FITTING SIZE B	FITTING SIZE C	BOLT HOLE	O.A.L.
R4578666	—	3/8"-24	3/8"-24	—	—	20 1/8"

HYDRAULIC BRAKE HOSES

Listed in Meritor Part Number Sequence

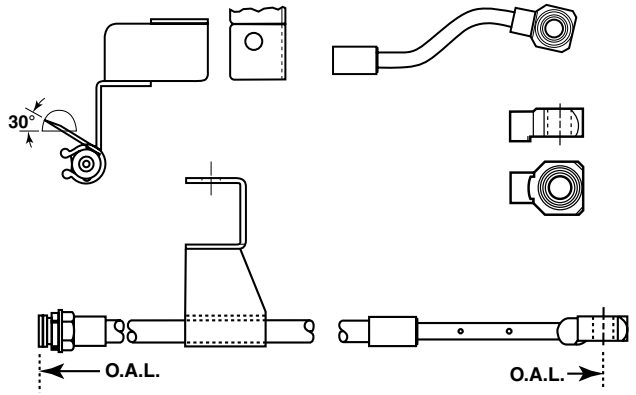

MERITOR NO.	REPLACES WAGNER NO.	FITTING SIZE A	FITTING SIZE B	FITTING SIZE C	BOLT HOLE	O.A.L.
R4578787	F116851 F120542	3/8"-24 UNF-2B	13/32"	—	—	25 5/16" 25 35/64"

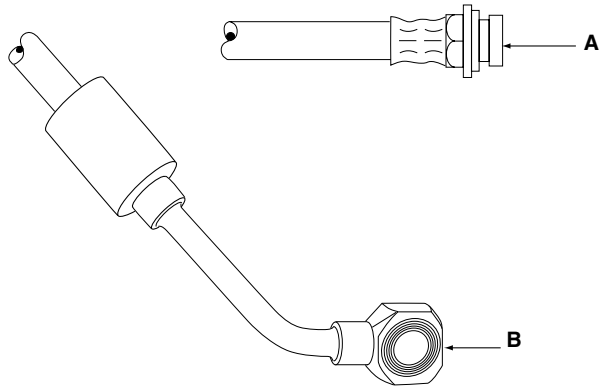

MERITOR NO.	REPLACES WAGNER NO.	FITTING SIZE A	FITTING SIZE B	FITTING SIZE C	BOLT HOLE	O.A.L.
R4578790	—	3/8"-24	No Thd.	—	—	21 1/4"

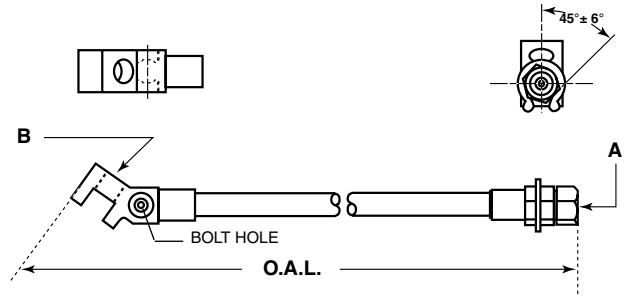

MERITOR NO.	REPLACES WAGNER NO.	FITTING SIZE A	FITTING SIZE B	FITTING SIZE C	BOLT HOLE	O.A.L.
R4578802	—	7/16"-24	29/64"	—	3/8"-24	18 3/4"

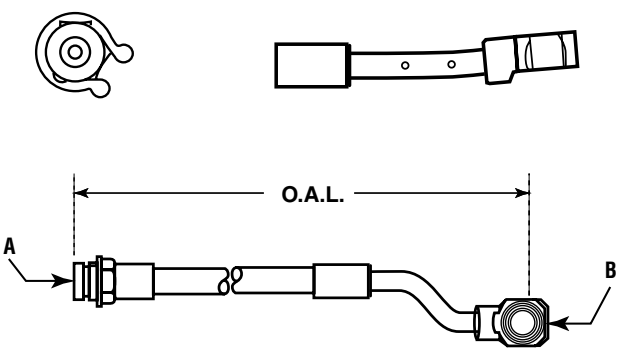

MERITOR NO.	REPLACES WAGNER NO.	FITTING SIZE A	FITTING SIZE B	FITTING SIZE C	BOLT HOLE	O.A.L.
R4578824	—	3/8"-24 UNF-2B	13/32" 25/64"	—	—	16 59/64" 17 5/32"

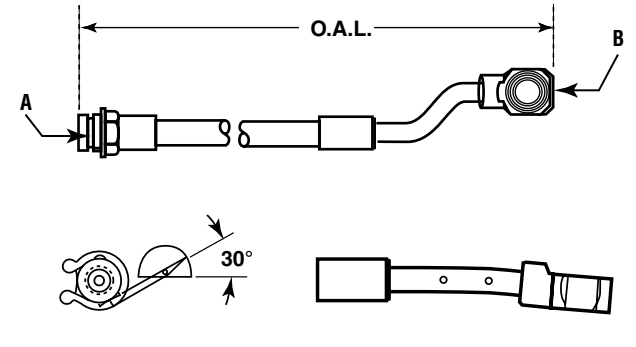

MERITOR NO.	REPLACES WAGNER NO.	FITTING SIZE A	FITTING SIZE B	FITTING SIZE C	BOLT HOLE	O.A.L.
R4578825	—	3/8"-24 UNF-2B	13/32"	—	—	16" 16 1/25"

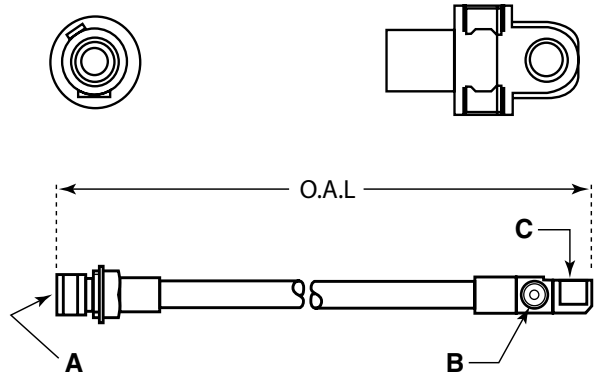

MERITOR NO.	REPLACES WAGNER NO.	FITTING SIZE A	FITTING SIZE B	FITTING SIZE C	BOLT HOLE	O.A.L.
R4578843	—	7/16"-24 THD.	3/8"-24 UNF-2B	23/64"	—	22 1/4" 22 1/2"

HYDRAULIC BRAKE HOSES

Listed in Meritor Part Number Sequence

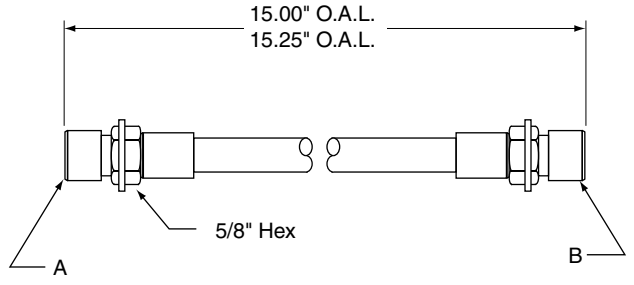

MERITOR NO.	REPLACES	FITTING SIZE A	FITTING SIZE B	FITTING SIZE C	BOLT HOLE	O.A.L.
R4578873	F132034	7/16"-24 UNS-2B Thd.	7/16"-24 UNS-2B Thd.	5/8" Hex	.610"	15" 15 1/4"

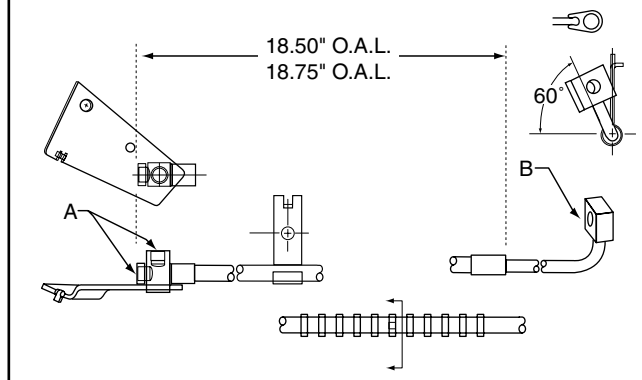

MERITOR NO.	REPLACES	FITTING SIZE A	FITTING SIZE B	FITTING SIZE C	BOLT HOLE	O.A.L.
R4578874	381161A	M10 x 1 Thd.	—	—	—	18 1/2" 18 3/4"

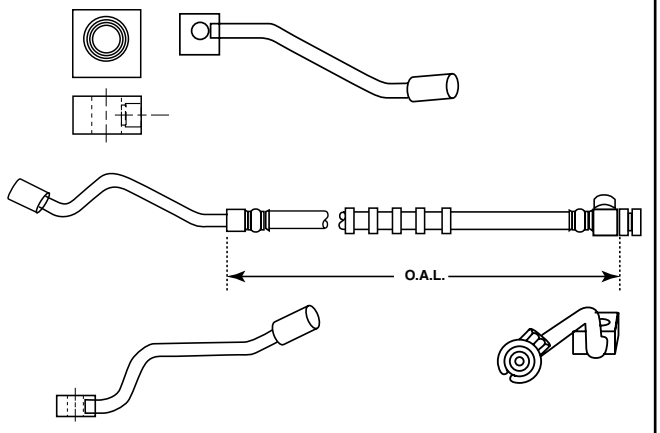

MERITOR NO.	REPLACES WAGNER NO.	FITTING SIZE A	FITTING SIZE B	FITTING SIZE C	HOLE	BOLT O.A.L.
R4578876	—	—	—	—	—	137.3"

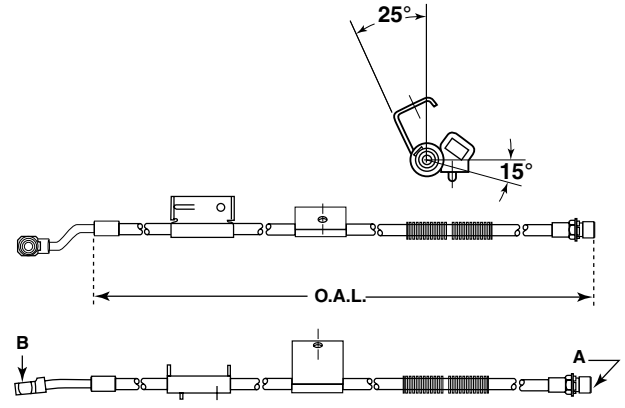

MERITOR NO.	REPLACES WAGNER NO.	FITTING SIZE A	FITTING SIZE B	FITTING SIZE C	HOLE	BOLT O.A.L.
R4578880	—	7/16"-24 THD.	—	—	—	27 29/32" 28 5/32"

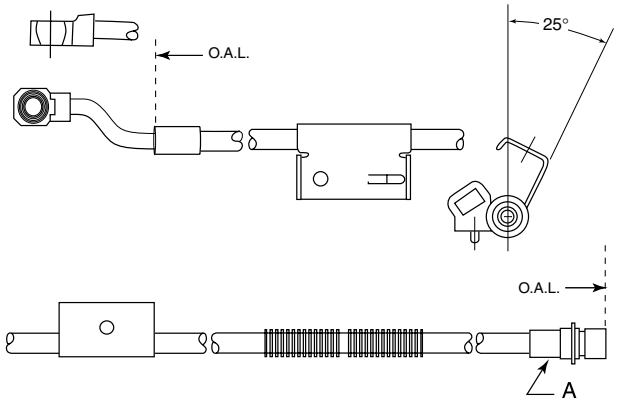

MERITOR NO.	REPLACES WAGNER NO.	FITTING SIZE A	FITTING SIZE B	FITTING SIZE C	BOLT HOLE	O.A.L.
R4578881	—	7/16"-24	—	—	—	28 9/64"

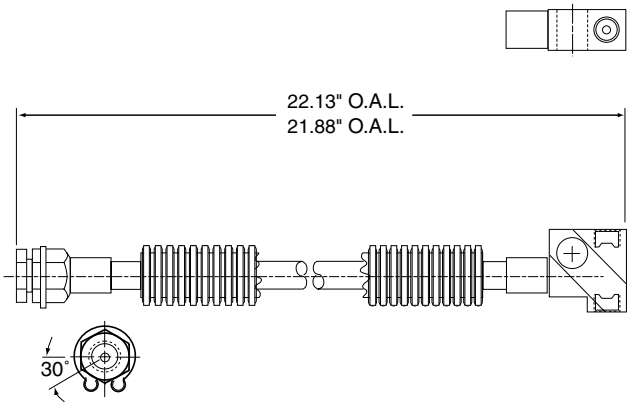

MERITOR NO.	REPLACES	FITTING SIZE A	FITTING SIZE B	FITTING SIZE C	BOLT HOLE	O.A.L.
R4578885	381367A	3/8"-24 UNF-2B Thd. (2 pls)	3/8"-24 UNF-2B Thd.		.470"	22.13" 21.88"

HYDRAULIC BRAKE HOSES

Listed in Meritor Part Number Sequence

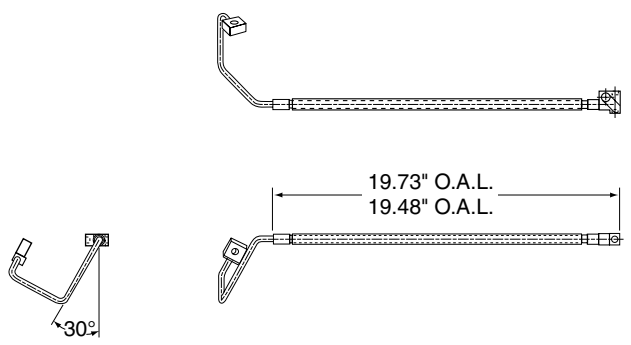

MERITOR NO.	REPLACES	FITTING SIZE A	FITTING SIZE B	FITTING SIZE C	BOLT HOLE	O.A.L.
R4578897	381282	No Thd.	15/32"	—	.382 .378	19.73" 19.48"

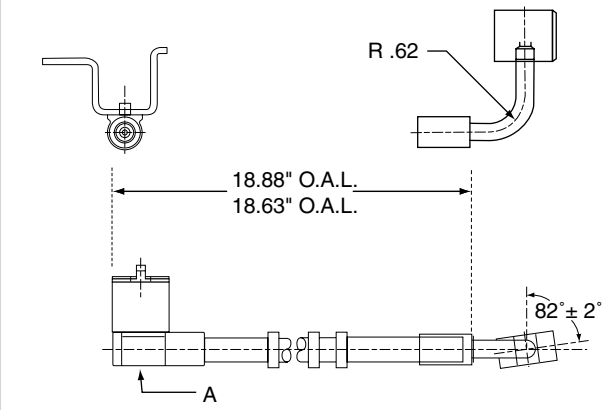

MERITOR NO.	REPLACES	FITTING SIZE A	FITTING SIZE B	FITTING SIZE C	BOLT HOLE	O.A.L.
R4578898	381339A	3/8"-24 Thd.	.382 .378	—	—	18.88 18.63

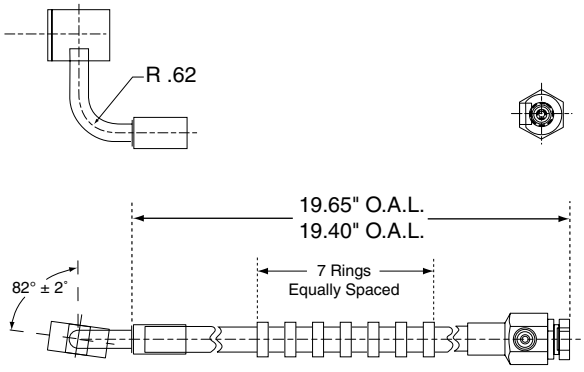

MERITOR NO.	REPLACES FEBI NO.	FITTING SIZE A	FITTING SIZE B	FITTING SIZE C	BOLT HOLE	O.A.L.
R4578899	381340A	5/16" x .060 Tubing	3/8"-24 UNF-2B Thd.	3/4" Hex	.678"	18.12" 17.88"

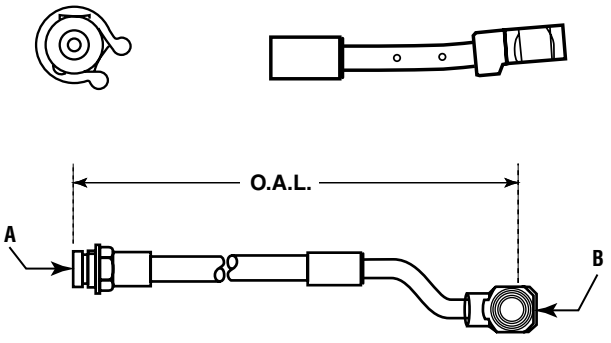

MERITOR NO.	REPLACES WAGNER NO.	FITTING SIZE A	FITTING SIZE B	FITTING SIZE C	BOLT HOLE	O.A.L.
R4578912	—	3/8"-24 UNF-2B	13/32" 25/64"	—	—	16 11/64" 15 59/64"

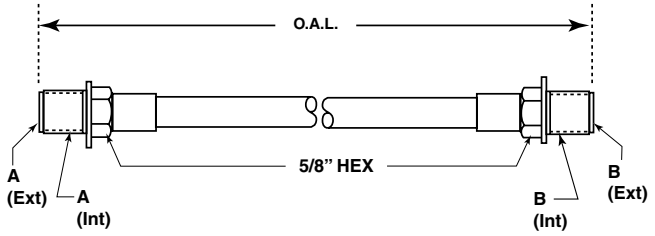

MERITOR NO.	REPLACES WAGNER NO.	FITTING SIZE A	FITTING SIZE B	BOLT HOLE	O.A.L.
R4588312	—	5/8"-18 NF-2A (Int) 7/16"-24 UNS-2B (Ext)	5/8"-18 NF-2A (Int) 7/16"-24 UNS-2B (Ext)		19 1/4" 19 1/2"

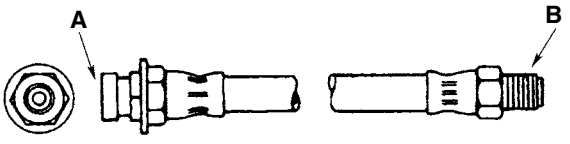

EUCLID NO.	REPLACES WAGNER NO.	FITTING SIZE A	FITTING SIZE B	FITTING SIZE C	BOLT HOLE	O.A.L.
R4588472	F102478 F80953 F98939	3/8"-24	7/16"-20	—	—	18 1/8"

HYDRAULIC BRAKE HOSES

Listed in Meritor Part Number Sequence

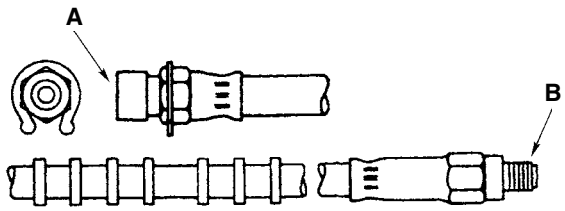

MERITOR NO.	REPLACES WAGNER NO.	FITTING SIZE A	FITTING SIZE B	FITTING SIZE C	BOLT HOLE	O.A.L.
R4588519	F78092 F80957	7/16"-24	7/16"-24	—	—	15 3/8"

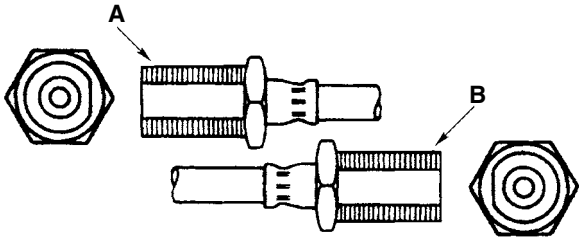

MERITOR NO.	REPLACES WAGNER NO.	FITTING SIZE A	FITTING SIZE B	FITTING SIZE C	BOLT HOLE	O.A.L.
R4588558	F79347	7/16"-24 Int. 3/4"-16 Ext.	7/16"-24 Int. 3/4"-16 Ext.	—	—	25 7/8"

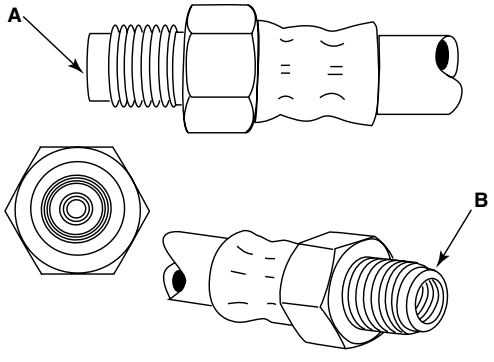

MERITOR NO.	REPLACES WAGNER NO.	FITTING SIZE A	FITTING SIZE B	FITTING SIZE C	BOLT HOLE	O.A.L.
R4588564	—	7/16"-24 5/8"-18	7/16"-24 5/8"-18	—	—	28 3/16"

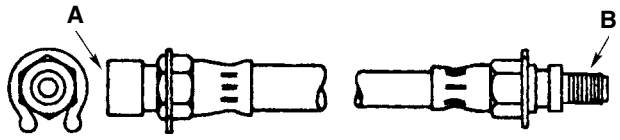

MERITOR NO.	REPLACES WAGNER NO.	FITTING SIZE A	FITTING SIZE B	FITTING SIZE C	BOLT HOLE	O.A.L.
R4588530	F71305 F98281	7/16"-20	7/16"-24	—	—	18 11/16"

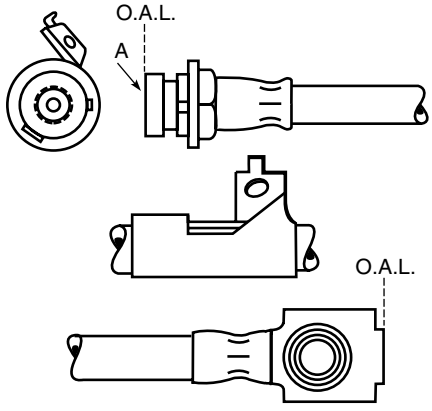

MERITOR NO.	REPLACES WAGNER NO.	FITTING SIZE A	FITTING SIZE B	FITTING SIZE C	BOLT HOLE	O.A.L.
R4588561	F39508 F107734	7/16"-24	7/16"-20	—	—	21 5/8"

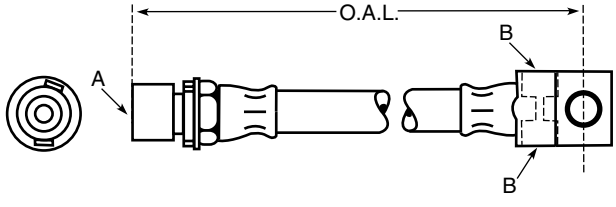

MERITOR NO.	REPLACES WAGNER NO.	FITTING SIZE A	FITTING SIZE B	FITTING SIZE C	BOLT HOLE	O.A.L.
R4588651	F80967	7/16"-24	3/8"-24	—	5/16"	14 3/4"

HYDRAULIC BRAKE HOSES

Listed in Meritor Part Number Sequence

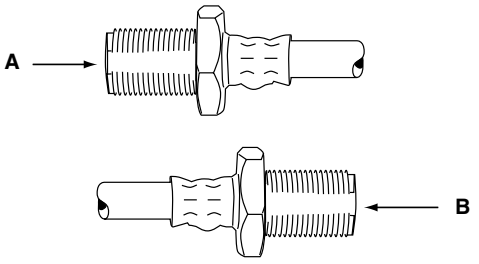

MERITOR NO.	REPLACES WAGNER NO.	FITTING SIZE			BOLT HOLE	O.A.L.
		A	B	C		
R45F124053	F124053	7/16"-24 Int.	7/16"-24 Int.	—	—	21 1/8"

STEEL BRAKE LINES AND FITTINGS

For Domestic Vehicles

STEEL BRAKE LINES

3/16" O.D.		1/4" O.D.		5/16" O.D.		3/8" O.D.	
Blue Label - 10 per Tube		Yellow Label - 10 per Tube		Orange Label - 5 per Tube		Green Label - 5 per Tube	
MERITOR NO.	LENGTH	MERITOR NO.	LENGTH	MERITOR NO.	LENGTH	MERITOR NO.	LENGTH
R45B308	8"	R45B408	8"	R45B508	8"	R45B608	8"
R45B312	12"	R45B412	12"	R45B512	12"	R45B612	12"
R45B320	20"	R45B420	20"	R45B520	20"	R45B620	20"
R45B330	30"	R45B430	30"	R45B530	30"	R45B630	30"
R45B340	40"	R45B440	40"	R45B540	40"	R45B640	40"
R45B351	51"	R45B451	51"	R45B551	51"	R45B651	51"
R45B360	60"	R45B460	60"	R45B560	60"	R45B660	60"

ADAPTER LINES

- All Adapter Lines are 8" Long
- Convert 3/16" and 1/4" Brake Lines to Fit Larger than Standard Openings

MERITOR NO.	TUBE O.D.	NUT COLOR	THREAD SIZES	APPLICATION
R458564	3/16"	Red	3/8"-24, 7/16"-24	General Motors
R458565	3/16"	Black	3/8"-24, 1/2"-20	Ford
R458566	3/16"	Green	3/8"-24, 1/2"-20	General Motors
R458567	3/16"	Olive	3/8"-24, 9/16"-18	Ford
R458568	1/4"	Blue	7/16"-24, 9/16"-18	General Motors
R458569	1/4"	Brass	7/16"-24, 7/16"-24	General Motors
R458570	1/4"	Silver	7/16"-24, 1/2"-20	Ford

FITTINGS

STEEL BRAKE LINE UNION
Hydraulic

MERITOR NO.	DESCRIPTION
R458639	For 3/16" Hydraulic Brake Line
R458640	For 1/4" Hydraulic Brake Line
R458641	For 5/16" Hydraulic Brake Line
R458642	For 3/8" Hydraulic Brake Line

COMPRESSION UNION
Air

MERITOR NO.	DESCRIPTION
R458643	For 3/16" Copper Air Brake Line
R458644	For 1/4" Copper Air Brake Line
R458645	For 5/16" Copper Air Brake Line
R458646	For 3/8" Copper Air Brake Line

STEEL BRAKE LINES AND FITTINGS

For Import Vehicles

Import Brake Lines			
Length	**European (ISO & Bubble Flare)**	**Japanese (Double Flare)**	**British (ISO and Bubble Flare)**
8"	**R457013680**	**R457013687**	**R457013694**
12"	**R457013681**	**R457013688**	**R457013695**
20"	**R457013682**	**R457013689**	**R457013696**
30"	**R457013683**	**R457013690**	**R457013697**
40"	**R457013684**	**R457013691**	**R457013698**
51"	**R457013685**	**R457013692**	**R457013699**
60"	**R457013686**	**R457013693**	**R457013700**

Import Brake Line Fittings			
Description	**Tube Size**	**Thread Size**	**Part Number**
European Nut	3/16"	M10 x 1.00	**R457013701**
Japanese Nut	3/16"	M10 x 1.00	**R457013702**
British Nut	3/16"	3/8" -24	**R457013703**

STEEL BRAKE LINE DISPLAYS

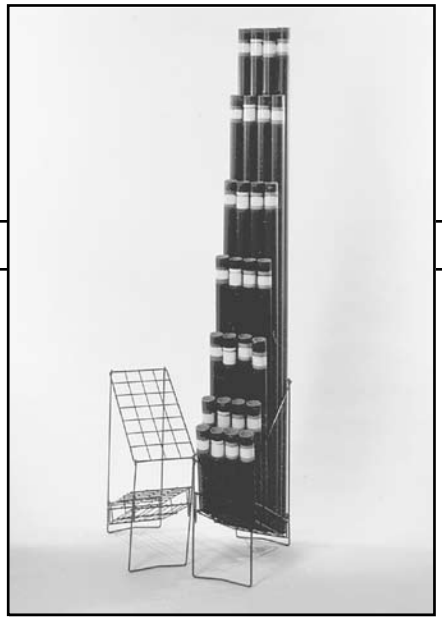

WIRE FLOOR RACK

7 1/2" Wide x 14" Long x 21" High
Holds 28 tubes of Steel Brake Line. (1 tube of each size)

MERITOR NO.	DESCRIPTION
R458692	Holds one tube of each size Steel Brake Line (Not Included).

MERITOR DOT 3 PLUS AND DOT 4 SUPER HEAVY-DUTY BRAKE FLUID

- Exceeds the Requirements of DOT 3 Brake Fluid
- Recommended for Cars, Trucks and Buses
- Operating Temperature Range of -60° F. to +450° F.
- Exceeds SAE J-1703, Federal Spec. VV-B-680 and Federal Safety Standard 116 DOT 3
- Available in Three Popular Fleet Sizes
- Plastic Containers — Won't Corrode or Rust
- Quarts and Gallons available in case quantities only.

MERITOR NO.	REPLACES	SIZE
R458571	Wagner FC9313	1 Quart — 12 per Case
R458572	Wagner FC9314	1 Gallon — 4 per Case
R458932	Wagner FC9315	5 Gallon Pail
R4512472	—	1 Quart — 12 per Case

DODGE, PLYMOUTH TRUCK

VEHICLE YEAR AND MODEL	DESCRIPTION	TYPE	PART MANUFACTURER	MERITOR NO.
DODGE 1 TON				
1969-71	Drum P3-300, M300 with Midland	HV	Midland	**R43MDC490X**
1957-66	Drum W-WM 300	HV	Midland	**R43MDCC462X**
DODGE HEAVY DUTY				
1974-77	D500, 600 Optional (Fire Wall Mount, Booster Only)	HV	Midland	**R43MDC4083X**
	Master Cylinder (Dual M/C)	HV	Midland	**R43MDC3502SBX**
1968-73	Bus S500-600 Opt. D400 thru 700 (Fire Wall Mount, Booster Only)	HV	Midland	**R43MDC4083X**
	Master Cylinder (Dual M/C)	HV	Midland	**R43MDC3502SBX**
1952-77	D, P, C, W, 400, 500, 600, 700, 800	HV	Midland	**R43MDC464X**
1971-77	3-4 Ton Various Models WT500	HV	Midland	**R43MDC448X**

If You Don't See A Booster You Want
CALL our
S.O.S. Department
1-888-725-9355

FORD TRUCK

VEHICLE YEAR AND MODEL	DESCRIPTION	TYPE	PART MANUFACTURER	MERITOR NO.
FORD 1 TON				
1963-66	F350 (Fire Wall Mount, Booster Only)	HV	Midland	**R43MDC4025X**
	Master Cylinder	HV	Midland	**R43MDC3472X**
FORD HEAVY DUTY & MOTOR HOME				
1970-82	LN-500, 600, 700, 750, 600, 7000 with Fire Wall Mount (Booster Only)	HV	Midland	**R43MDC4085X**
	Master Cylinder (Dual M/C)	HV	Midland	**R43MDC3500SFX**
	Master Cylinder (Single M/C)	HV	Midland	**R43MDC3507SBX**
1968-77	F, N, B-500, 600, 700, 750, with Fire Wall Mount (Booster Only)	HV	Midland	**R43MDC4085X**
	Master Cylinder (Dual M/C)	HV	Midland	**R43MDC3500SFX**
	Master Cylinder (Single M/C)	HV	Midland	**R43MDC3507SBX**
1967	F, B-500, 600, 800 with 15,000-22,000 G.V.W. (Fire Wall Mount, $3^{19}/_{32}$ x 5" Stud Pattern Booster Only)	HV	Midland	**R43MDC4044X**
	Master Cylinder	HV	Midland	**R43MDC3472X**
1963-68	B, F, N, 500, 600, 700 (Fire Wall Mount, $9^1/_2$" Clamp Band Diameter, Booster Only)	HV	Midland	**R43MDC4025X**
	Master Cylinder	HV	Midland	**R43MDC3472X**
1963-68	B, F, N-500, 700 (Fire Wall Mount, $11^1/_2$" Clamp Band Diameter, Booster Only)	HV	Midland	**R43MDC4029X**
	Master Cylinder	HV	Midland	**R43MDC3472X**
1952-63	B, C, F, P500, F600	HV	Midland	**R43MDC462X**
1947-63	Various Models with Midland Air over Hydraulic	HV	Midland	**R43MDKN35010X**

GM (CHEVROLET/GMC) TRUCK

VEHICLE YEAR AND MODEL	DESCRIPTION	TYPE	PART MANUFACTURER	MERITOR NO.
1 TON 30, 3500 SERIES				
1967	C, G, Drum with 11,000 lb. Axle with Midland	HV	Midland	**R43MDC4055X**
1963-70	C, G, P30 Drum with Midland	HV	Midland	**R43MDC468BX**
GMC TRUCK-HEAVY DUTY & SCHOOL BUS				
1990-95	Top Kick & Kodiac		Delco	**R43DE18014080X**
1973-96	4000-6000 series with Delco Hy-power	HP	Delco	**R43DE18001810X**
1985-87	C7D042, C7D064 Conventional Cab Single System with 15 x 6" Rear Brake	HV	Bendix	**R41R2515050**
1979-87	School bus with Delco dual power system Vacuum booster	VB	Delco	**R43DE18001072X**
	Hydraulic Booster	HB	Delco	**R43DE18001047X**
1977-85	C5D042 Conventional Cab Single System	HV	Bendix	**R41BN2515050**
1968-69	RM7500-P, SM5500-M, SM6500-M (19,000 lb. G.V.W.)	HV	Midland	**R43MDC4090X**
1968-69	School Bus SM, SS, SG5500M, SM6500M (Fire Wall Mount, Booster Only)	HV	Midland	**R43MDC4089X**
	Master Cylinder (Dual M/C)	HV	Midland	**R43MDC3503SX**
1967-71	TM7003, TM, TG7500V	HV	Midland	**R43MDC4058X**
1967-71	TM, TG, 5500, 6500V	HV	Midland	**R43MDC4056X**
1967-71	TM, TG, 5500, 6500V (23,000 G.V.W.)	HV	Midland	**R43MDC4055X**
1967-68	EG, EM, ES5500V, 6500, EG, EM ES, 4500V (Fire Wall Mount, Booster Only)	HV	Midland	**R43MDC4037X**
	Master Cylinder	HV	Midland	**R43MDC3492X**
1966-73	HG, HM-7500V (25,000-31,000 G.V.W.)	HV	Midland	**R43MDC4042X**
1966-73	JG, JM-7500V (34,000-45,000 G.V.W.)	HV	Midland	**R43MDC4036X**
1966-70	HG, HM-5500V (18,500-24,000 G.V.W.)	HV	Midland	**R43MDC4035X**
1966-70	HG-HM 5500V (15,000-20,000 G.V.W.)	HV	Midland	**R43MDC4034X**
1960-65	SPV, BWV, LWV, 5000, LV, BV, BWV5500, BV6000 with Midland (with 3 Hydraulic Lines)	HV	Midland	**R43MDC4013X**
1960-64	Uses with E-MDC4013X on Tandem Axles	HV	Midland	**R43MDC4007X**
1960-63	1 1/2 Ton 3000, 2 Ton 3500	HV	Midland	**R43MDC4003X**
1960-61	Various Models with Air over Hydraulic			
1959-62	V, BV, LV, SV 4000, 5000 (with 3 Hydraulic Lines)	HV	Midland	**R43MDC4012X**
1952-66	1 1/2 Ton over 8,800-16,000 lb.			
1947-62	Field Installation Air over Hydraulic	HV	Midland	**R43MDKN35010X**

INTERNATIONAL TRUCK and ENGINE

VEHICLE YEAR AND MODEL	DESCRIPTION	TYPE	PART MANUFACTURER	MERITOR NO.
HEAVY DUTY- MOTOR HOME & SCHOOL BUS				
1987-96	S-1654, S-1753, S-1754, S-1854,			
	S-1954, F-1854, F-1954, Metro II with disc	HM	Bendix	**R41R2771552**
	(pump & motor assembly)			**R41R2771494**
1985-86	C01650B Cargostar with disc	HM	Bendix	**R41R2771494**
	(pump & motor assembly)			**R41R2771494X**
1984-86	C01850B Cargostar with disc	HM	Bendix	
	(pump &motor assembly)			**R41R2771494**
1965-85	C01610B, C01710B Cargostar-single System			
	with 14 x 2½" Front brake	HV	Bendix	**R41R2514917**
	with 15 x 3" Front brake	HV	Bendix	**R41R2515029**
1965-85	C01750B, C01850B Cargostar-single system			
	with 15 x 7, 16 x 6 Rear brake	HV	Bendix	**R41R2515029**
1977-84	C01810B Cargostar-single system			
	with 15 x 6 Rear brake	HV	Bendix	**R41R2514917X**
	with 15 x 7, 16 x 6 Rear brake	HV	Bendix	**R41R2515029**
1979-83	S-1723, S1753 School bus-dual system 2 required	HV	Bendix	**R41R2512059**
1979-83	S-1724, S-1754, S-1824, S-1924, S-1854,			
	S-1954, F-1924, F-1954-single system			
	with 15 x 5, 15 x 6 Rear brake	HV	Bendix	**R41R2514917**
	with 15 x 7, 16 x 6 Rear brake	HV	Bendix	**R41R2515029**
1982-83	S-1654, Metro II single system	HV	Bendix	**R41R512059**
1979-83	S-1623, S-1723 School bus-dual system	HV	Bendix	**R41R2512059**
1979-83	S-1624	HV	Bendix	**R41R2514917**
1979-81	S-1654 Metro II All	HV	Bendix	**R41R2514917**
1979-81	S-1854 Single System			
	with 15 x 6 Rear brake	HV	Bendix	**R41R2514917**
	with 15 x 7, 16 x 6 Rear brake	HV	Bendix	**R41R2515029**
1978-84	S Models with Delco dual power system			
	15" vacuum booster	VB	Delco	**R43DE18003144X**
	Hydraulic Booster	HB	Delco	**R43DE18001047X**
1973-96	Models with Delco Hy-power	HP	Delco	**R43DE18003998X**
1977-81	C01910B Cargostar-single system			
	with 15 x 6 Rear brake	HV	Bendix	**R41R2514917**
	with 15 x 7, 16 x 6 Rear brake	HV	Bendix	**R41R2515029**
1977-79	1603 School bus duel system	HV	Bendix	**R41R2514917**
1968-79	1610 FC School bus dual system	HV	Bendix	**R41R2512059**
1977-78	1650 Economizer single system	HV	Bendix	**R41R2514917**
	1650 Economizer dual system	HV	Bendix	**R41R2512059**
1965-78	1750, 1800, 1850 Loadstar	HV	Bendix	**R41R2514917**
1968-78	F-1800, F1850 Loadstar	HV	Bendix	**R41R2514917**
1973-76	Drum Multistop-1210 & 1510			
	(Fire Wall Mount, Booster Only)	HV	Midland	**R43MDC4044X**
	Master Cylinder	HV	Midland	**R43MDC3510SAX**
1968-77	1500 Series (Fire Wall Mount, Booster Only)	HV	Midland	**R43MDC4044X**
	Master Cylinder	HV	Midland	**R43MDC3510SAX**
1969-77	1603 Series Bus, 1703 (Fire Wall Mount, Booster Only)	HV	Midland	**R43MDC4089X**
	Master Cylinder	HV	Midland	**R43MDC3500SEX**
1968-78	1600, 1603, 1700, 1703, 1800, 1803,			
	1853 School Bus with 16" Rear Brakes (2 Required)	HV	Bendix	**R41R2512059X**
1947-62	Various Field Installation with Midland Air over Hydraulic	HV	Midland	**R43MDKN35010X**

REMANUFACTURED POWER BRAKE BOOSTERS

BENDIX

- Common Replacement
  R41R2515050

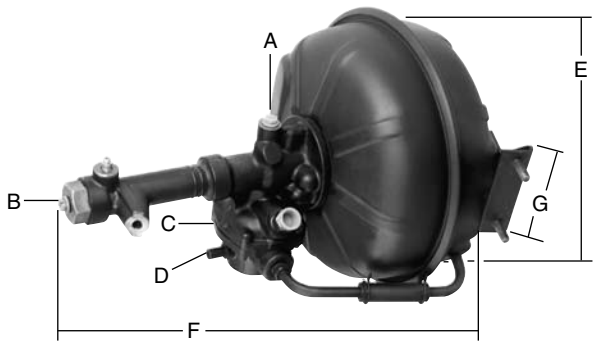

MERITOR NO.	REPLACES	A	B	C	D	E	F	G	RCV	GENERAL APPLICATION
R41R2512059	Bendix 2512059	1/4" IF	7/16"-20	1/2" PT	3/4"	12 3/4"	19"	1 3/8"	Yes	IHC

BENDIX

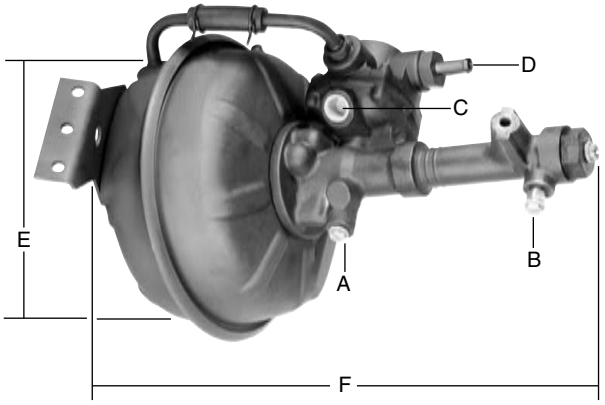

MERITOR NO.	REPLACES	A	B	C	D	E	F	G	RCV	GENERAL APPLICATION
R41R2514916	Bendix	1/4" IF	5/16" IF	1/2" IF	1/2"	11"	16"	—	No	GM

BENDIX

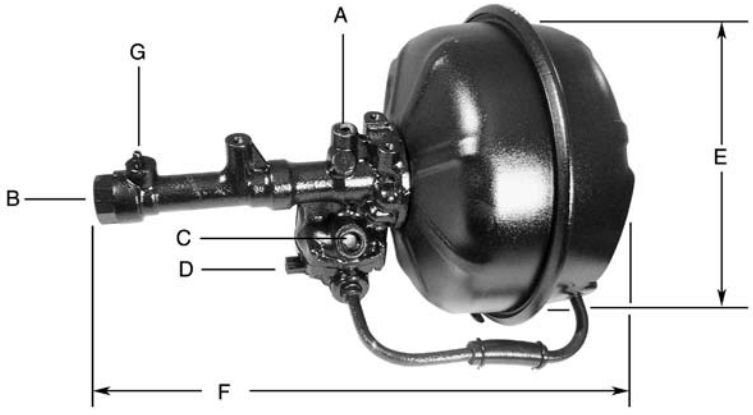

MERITOR NO.	REPLACES	A	B	C	D	E	F	G	RCV	GENERAL APPLICATION
R41R2514917	Bendix R2514917	1/4" IF	5/16" IF	1/2" IF	1/2"	11"	16"	—	No	GM

REMANUFACTURED POWER BRAKE BOOSTERS

BENDIX

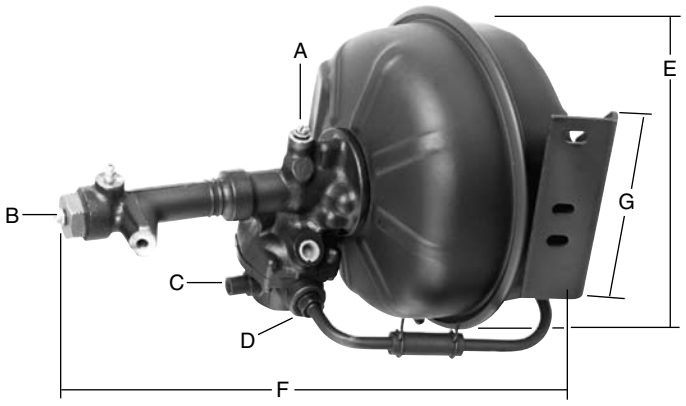

MERITOR NO.	REPLACES	A	B	C	D	E	F	G	RCV	GENERAL INFORMATION
R41R2514918	Bendix 2514918	1/4" IF	1/4" IF	3/8" PT	3/4"	12 3/4"	19"	7 3/16"	Yes	Ford

BENDIX

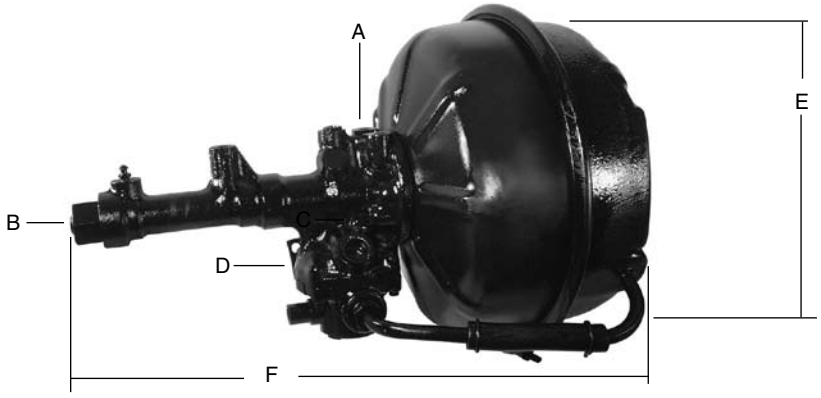

MERITOR NO.	REPLACES	A	B	C	D	E	F	G	RCV	GENERAL APPLICATION
R412514920	Bendix R2514920	1/4" IF	5/16" IF	1/2" IF	1/2"	11"	16"	—	No	GM

BENDIX

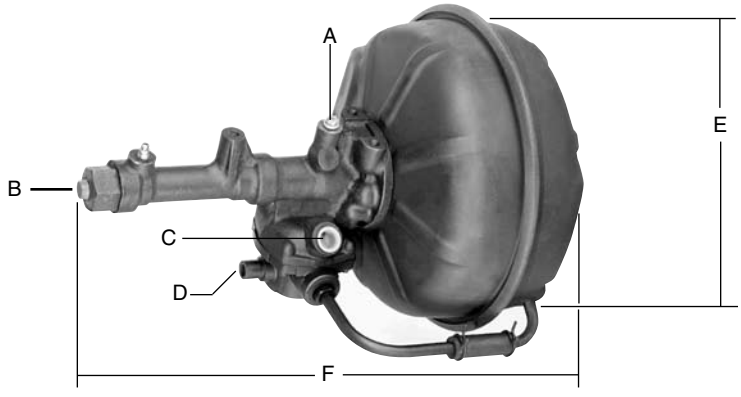

MERITOR NO.	REPLACES	A	B	C	D	E	F	RCV	GENERAL APPLICATION
R41R2515029	Bendix 2515029	1/4" IF	1/4" IF	1/2" IF	1/2"	12 3/4"	17 5/8"	Yes	Dodge

REMANUFACTURED POWER BRAKE BOOSTERS

BENDIX

PHOTO NOT AVAILABLE
AT TIME OF PRINTING

MERITOR NO.	REPLACES	A	B	C	D	E	F	G	RCV	GENERAL APPLICATION
R41R2515030	Bendix R2515030	1/4" IF	5/16" IF	1/2" IF	1/2"	11"	16"	—	No	GM

BENDIX

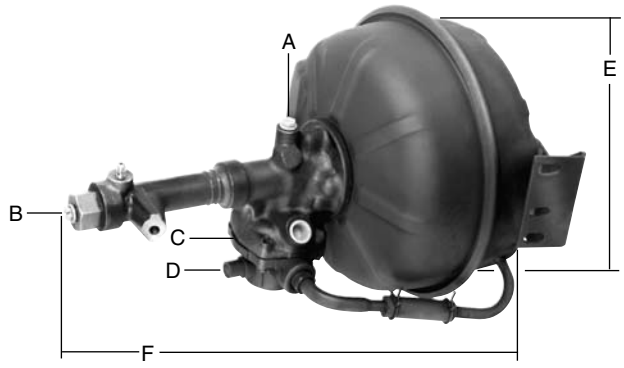

MERITOR NO.	REPLACES	A	B	C	D	E	F	RCV	GENERAL APPLICATION
R4152515050	Bendix 2515050	5/16" IF	5/16" IF	1/2" PT	3/4"	12 3/4"	19"	Yes	Ford

BENDIX

PHOTO NOT AVAILABLE
AT TIME OF PRINTING

MERITOR NO.	REPLACES	A	B	C	D	E	F	G	RCV	GENERAL APPLICATION
R41R2515074	Bendix R2515074	1/4" IF	5/16" IF	1/2" IF	1/2"	11"	16"	—	No	GM

REMANUFACTURED POWER BRAKE BOOSTERS

BENDIX

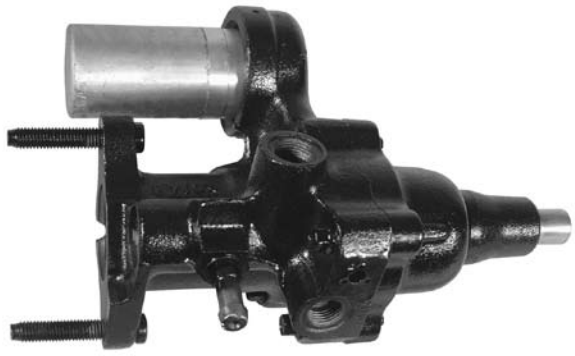

MERITOR NO.	REPLACES	A	B	C	D	E	F	G	RCV	GENERAL APPLICATION
R41R2771117	Bendix R2771117	1/4" IF	5/16" IF	1/2" IF	1/2"	11"	16"	—	No	GM

BENDIX

PHOTO NOT AVAILABLE
AT TIME OF PRINTING

MERITOR NO.	REPLACES	A	B	C	D	E	F	G	RCV	GENERAL APPLICATION
R41R2771250	Bendix R2771250	1/4" IF	5/16" IF	1/2" IF	1/2"	11"	16"	—	No	GM

BENDIX

PHOTO NOT AVAILABLE
AT TIME OF PRINTING

MERITOR NO.	REPLACES	A	B	C	D	E	F	G	RCV	GENERAL APPLICATION
R41R2771494	Bendix R2771494	1/4" IF	5/16" IF	1/2" IF	1/2"	11"	16"	—	No	GM

REMANUFACTURED POWER BRAKE BOOSTERS

BENDIX

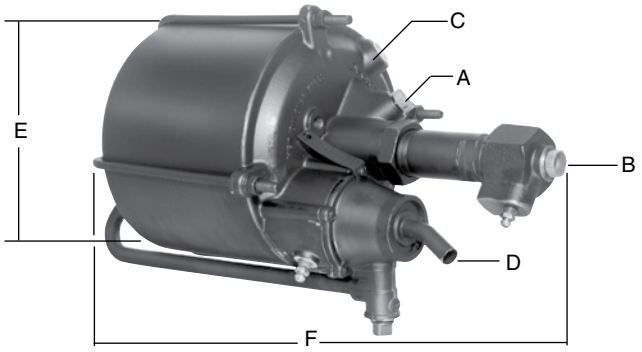

MERITOR NO.	REPLACES	A	B	C	D	E	F	RCV	GENERAL APPLICATION
R41R374980X	Bendix R374980	1/2"-20	1/2"-20	1/2" PT	3/4"	9 1/2"	17 1/4"	Yes	Ford, GM IHC

If You Don't See A Booster You Want
CALL our
S.O.S. Department
1-888-725-9355

If you detect any errors in this Catalog, please let us know.
We want the information to be as accurate as possible; we appreciate your help in making it so.
Write or call: Catalog Corrections
Meritor Industries, LLC
7975 Dixie Highway
Florence, KY 41042-2754
(859) 525-3500

HYDRAULIC ACTUATED UNITS

BENDIX HYDRO-MAX

MERITOR NO.	REPLACES	GENERAL APPLICATION
R41R2770433	Bendix R2770433	—
R41R2771552X	Bendix R2771552	International Truck & Engine (ITE)
R41R374980	Bendix R374980	—
R412515075	Bendix R2515075	—
R412518644	Bendix R2518644	—

SHAFT

The Shaft Helps to Identify the Unit

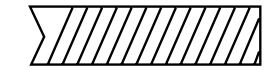

2771559
Threaded

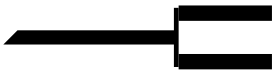

2771552
Double Clevis

FORD
Measurement

2771558 - 7-1/2"
2771558L - 9"

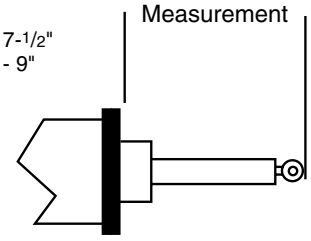

Shaft end has single clevis.
Measure length from housing to shaft end.

HYDRAULIC BRAKE TOOLS

BRAKE SHOE RETURN SPRING REMOVAL TOOL
for LUCAS BRAKE

MERITOR R476061

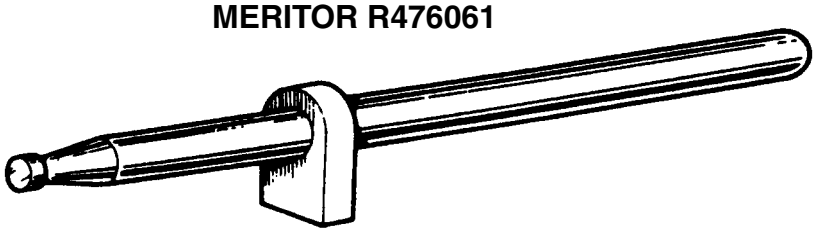

BRAKE SHOE RETURN SPRING
REMOVAL PROCEDURE

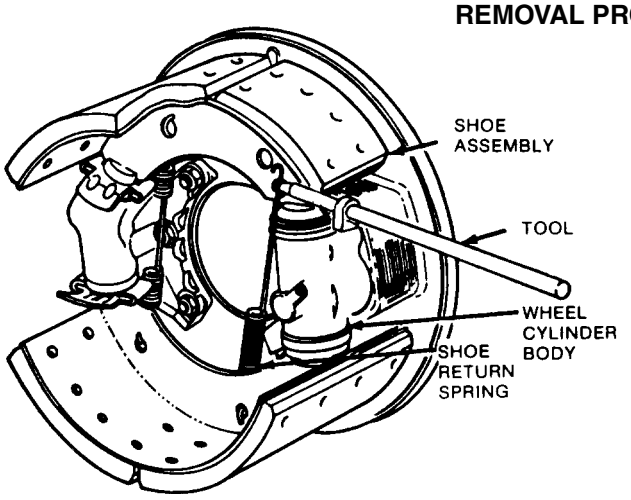

1. Insert the end of the bar into the loop on one of the shoe return springs.
2. Using the wheel cylinder body as a fulcrum, unhook the spring from the shoe web.
3. Support the lower shoe, unhook the second spring, and remove the shoes.

NOTE: The shoe return spring is hooked on the backside of the shoe web. Be careful not to damage the manual adjustment wheel or the rubber dust boot.

PRESSURE BLEEDER TANK

MERITOR R4745

Bleeds:

- Clutch Systems
- Tandem Safety Master Cylinders
- Dual Clutch and Brake Cylinders
- Power Brake Systems
- Any Master Cylinder — With or Without a Check Valve

INCLUDES	
1	Quick Disconnect Male Fitting
1	Ball Point Filler
1	Bleeder Hose
1	Adapter for Passenger Car/Light Trucks with Open Tank Tandems
1	Adapter for Round Open Tanks and Plastic Reservoirs with Screw-Caps
1	Adapter for Plastic Tanks

GLOSSARY OF TERMS AND ABBREVIATIONS

2WD: 2 Wheel Drive

2WS: 2 Wheel Steer

4WD: 4 Wheel Drive

4WS: 4 Wheel Steer

A/C: Air Conditioning

A/T: Automatic Transmission

(ABS) ANTI-LOCK BRAKE SYSTEM: An electronically controlled system that regulates brake line pressure to prevent wheel lock-up on any road surface and helps to maintain directional stability when braking.

alum: aluminum

AR: Axle Ratio

Chassis Cab: An incomplete vehicle consisting of a cab on a bare frame rail chassis, needing a body or load platform in order to become complete.

COE: Cab-Over-Engine design, were the engine is located below a tiltable cab enclosure.

Conventional Cab: A cab design in which the engine is located ahead, or mostly ahead of the cowl.

Cowl: The front part of a cab or body directly below the windshield base and between the firewall and instrument panel, usually including the hood.

Curb Weight: The weight of the empty vehicle (with out a load or driver), including fuel, coolant, oil, and standard equipment.

DRW: Dual Rear Wheel

FA: Front axle

Fd: Front axle disc brake.

FMSI: Friction Materials Standard Institute

GLOSSARY OF TERMS AND ABBREVIATIONS (Cont'd.)

Forward Control (FC): Vehicle with driver controls (pedals, steering wheel, instruments) located as far forward as possible. Supplied with out body, the controls are stationary mounted as apposed to the special mounting of a tilt cab.

FWD: Front Wheel Drive

(GCW) Gross Combination Weight: Actual weight of an entire vehicle at the ground with a trailer or trailers, including vehicle, equipment, driver, passengers, fuel and payload (everything that moves with the vehicle).

(GCWR) Gross Combination Weight Rating: The value specified by the vehicle manufacture as the GCW.

(GVW) Gross Vehicle Weight: the actual weight of an entire vehicle including all equipment, fuel, body, payload, driver excreta. This is for the individual unit only, such as a truck or tractor only, not including a trailer.

(GVWR) Gross Vehicle Weight Rating: The legal load capacity of a single vehicle, calculated by adding front and rear axle capacities, including suspension, wheel, tire and brake limitations (if suspension capacity is less than axle capacity, the lower capacity is used).

GVW (CLASS): The truck classes are determined by GVWR:

Class 2 = 6,001 – 10,000 lbs.	Class 3 = 10,001 – 14,000 lbs.
Class 4 = 14,011 – 16,000 lbs.	Class 5 = 16,001 – 19,500 lbs
Class 6 = 19,501 – 26,000 lbs.	Class 7 = 26,001 – 33,000 lbs
Class 8 = 33,001 lbs. and over	

H/D: Heavy Duty

Hi-Perf.: High Performance

Hyd: Hydraulic

L/D: Light Duty

OE: Original Equipment

RWAL: Rear Wheel Antilock Brakes

RA: Rear Axle

SL: Caliper suffix denoting loaded with new Disc Pads.

GLOSSARY OF TERMS AND ABBREVIATIONS (Cont'd.)

Tilt Cab: Vehicle designed with engine beneath cab and having provisions for tilting the cab forward on a pivot point near the front bumper to provide easy access to the engine. (see COE)

w: With

w/o: Without

WB: Wheel Base

whl: Wheel

Vacuum Assist Power Brakes: Standard type hydraulic brakes with a pressure assist cylinder having a vacuum chamber which when atmospheric pressure is allowed to one side of the piston or diaphragm, drives a plunger in the hydraulic system thereby increasing the effect of the pedal pressure.

ZR: Caliper suffix denoting loaded with new Performance Friction Z type Disc Pads.

Section 7
Index

PAGE
COMPETITIVE CROSS REFERENCE 7-2
OEM CROSS REFERENCE 7-37
NUMERICAL PARTS INDEX 7-56
WARRANTY 7-70

How to use this listing:

Look at one digit at a time until you find the part number you wish to locate. The listing is in numeric sequence and numbers have precedence over letters.

Example:

201179X would be followed by
201180
and
23123573002 would be followed by
29 1000
and
69420654 would be followed by
F7054D120

COMPETITIVE CROSS REFERENCE LISTING

BENDIX PART #	MERITOR PART #
12	**R4133312**
35	**R4133335**
96	**R4133396**
299	**R46299**
321	**R700321**
346	**R700346**
358	**R46358**
381	**R700381**
383	**R700383**
400	**R700400**
401	**R700401**
427	**R700427**
442	**R700442**
463	**R700463**
581	**R41581**
582	**R41582**
583	**R468140**
723	**R46723**
3571	**R4133714**
3572	**R4133715**
3598	**R4133206**
3643	**R4133206**
3647	**R4133206**
6532	**R406532**
6549	**R402235118**
6713	**60050136**
6780	**R4066780**
9021	**R4090021**
9055	**R402238231**
9070	**R4090070**
11046	**R4111046**
11119	**R4111119**
11120	**R4111120**
11122	**R4111122**
11123	**R4111123**
11129	**R4111129**
11150	**R4111150**
11151	**R4111151**
11161	**R4111161**
11191	**R4111191**
11206	**R4111206**
11208	**R4111208**
11266	**R4111266**
11318	**R4111318**
11320	**R4111320**
11395	**R4111395**
11451	**R4111451**

BENDIX PART #	MERITOR PART #
11454	**R4111454**
11455	**R4111455**
11455	**R4111455**
11456	**R4111456**
11466	**R4111466**
11467	**R4111467**
11468	**R4111468**
11494	**R4111494**
11576	**R4111494**
11582	**R4111582**
11583	**R4111583**
11584	**R4111584**
11618	**R4111618**
11619	**R4111619**
11622	**R4111622**
11624	**R4111624**
11626	**R4111626**
11629	**R4111629**
11630	**R4111630**
11631	**R4111631**
11632	**R4111632**
11633	**R4111633**
11634	**R4111634**
11635	**R4110435**
11641	**R4111641**
11668	**R4111668**
11669	**R4111669**
11676	**R4111676**
11682	**R4111682**
11730	**R4111730**
11730	**R4111730**
11732	**R4111732**
11732	**R4111732**
11738	**R4111738**
11739	**R4111739**
11758	**R4111758**
11768	**R4111768**
11772	**R4111772**
11773	**R4111773**
11775	**R4111775**
11801	**R4111801**
11854	**R4111854**
11856	**R4111856**
11860	**R4111860**
11861	**R4111861**
11863	**R4111863**
11864	**R4111864**

BENDIX PART #	MERITOR PART #
11865	**R4111865**
11873	**R4111873**
11885	**R4111885**
11892	**R4111892**
11896	**R4111896**
11898	**R4111898**
11902	**R4111902**
11905	**R4111905**
11908	**R4111908**
11909	**R4111909**
11910	**R4111910**
11911	**R4111911**
11912	**R4111912**
11913	**R4111913**
11915	**R4111915**
11916	**R4111916**
11917	**R4111917**
11923	**R4111923**
11926	**R4111926**
11930	**R4111930**
11931	**R4111931**
11937	**R4111937**
11944	**R4111944**
11957	**R4111957**
11959	**R4111959**
11982	**R4111982**
11983	**R4111983**
11989	**R4111989**
11992	**R4111992**
11993	**R4111993**
11994	**R4111294**
11994	**R4111994**
11995	**R4111995**
11995	**R4111995**
11999	**R4111999**
12002	**R4111917**
12007	**R4112007**
12008	**R4112008**
12026	**R4111959**
12029	**R4112029**
12052	**R4112052**
12054	**R4112054**
12055	**R4112055**
12058	**R4112058**
12058	**R4112058**
12066	**R4112066**
12073	**R4112073**

COMPETITIVE CROSS REFERENCE LISTING

BENDIX PART #	MERITOR PART #
12081	**R4111801**
12098	**R4112098**
12117	**R4112117**
12118	**R4112118**
12119	**R4112119**
12120	**R4112120**
12121	**R4112121**
12166	**R4112166**
12168	**R4112168**
12169	**R4112169**
12176	**R4112176**
12178	**R4112178**
12183	**R4112183**
12197	**R148228**
12197	**R4112197**
12198	**R4112198**
12200	**R4112197**
12200	**R4112200**
12219	**R4112219**
12220	**R4112220**
12266	**R4111923**
12313	**R4110352**
12314	**R4110352**
12342	**R4112342**
12343	**R4112198**
12357	**R4112357**
12466	**R4112466**
12492	**R4112492**
12493	**R4112058**
12519	**R4112519**
12575	**R4112575**
12641	**R4112641**
12833	**R4112833**
12834	**R4112834**
12840	**R4112840**
12842	**R4112842**
12843	**R4112843**
12845	**R148228**
13022	**R4113022**
13041	**R4113041**
13055	**R4110372**
13056	**R4113056**
13057	**R4113057**
13118	**R4113118**
13123	**R4113123**
13136	**R4112073**
13182	**R4113182**

BENDIX PART #	MERITOR PART #
13207	**R4113207**
13225	**R4110348**
13249	**R4110382**
13252	**R4110376**
13263	**R4113263**
13268	**R4110384**
13282	**R4113282**
13282	**R4113282**
13284	**R4113284**
13284	**R4113284**
13315	**R4113315**
13318	**R4113318**
13347	**R4113347**
13355	**R4113355**
13442	**R4113442**
13488	**R4113488**
13505	**R4113505**
13508	**R4113508**
13509	**R4113509**
13511	**R4113511**
13513	**R4113513**
13514	**R4113514**
13514	**R4113514**
13515	**R4113515**
13515	**R4113515**
13542	**R4513542**
13543	**R4113543**
13607	**R4113607**
13648	**R4113648**
13649	**R4113649**
22141	**R4122141**
22151	**R4122151**
22160	**R4122160**
22187	**R4122187**
22202	**R4122202**
22203	**R4122203**
22204	**R4122204**
22204	**R4122204**
22205	**R4122205**
22208	**R4122160**
22210	**R4122210**
22211	**R4122211**
22232	**R4122232**
22303	**R4122303**
22305	**R4122305**
22318	**R4122318**
22319	**R4122319**

BENDIX PART #	MERITOR PART #
22319	**R44140344**
22324	**R4122324**
22342	**R4122342**
22343	**R4122343**
22346	**R4122346**
22350	**R4122350**
22381	**R4122381**
22386	**R4122386**
22387	**R4122387**
22387	**R4122387**
22388	**R4122388**
22436	**R4122436**
22437	**R4122437**
22482	**R4122482**
22484	**R4122484**
22486	**R4122486**
22488	**R4122488**
22489	**R4122489**
22494	**R4122494**
22505	**R4122505**
22568	**R4122568**
22596	**R4122596**
22597	**R4122597**
22598	**R4122598**
22599	**R4122599**
22643	**R4122643**
22679	**R4122679**
22681	**R4122681**
22682	**R4122682**
22688	**R4122688**
22688	**R4122688**
22697	**R4122697**
22705	**R4122705**
22706	**R4122706**
22770	**R4122770**
22809	**R4122809**
22872	**R4122872**
22882	**R4122882**
22893	**R4122893**
22908	**R4122908**
22915	**R4122915**
22934	**R4122934**
22935	**R4122935**
22937	**R4122937**
22937	**R4122937**
22964	**R4122964**
23969	**R4023969**

COMPETITIVE CROSS REFERENCE LISTING

BENDIX PART #	MERITOR PART #
33002	**R4133002**
33003	**R4133003**
33004	**R4133004**
33005	**R4133005**
33136	**R4133136**
33206	**R4133206**
33207	**R4133207**
33230	**R4133230**
33231	**R4133231**
33256	**R4133256**
33257	**R4133257**
33278	**R4133278**
33279	**R4133279**
33312	**R4133312**
33315	**R4133315**
33316	**R4133316**
33320	**R4133320**
33321	**R4133321**
33335	**R4133335**
33336	**R4133336**
33338	**R4133338**
33366	**R4133366**
33367	**R4133367**
33376	**R4133376**
33377	**R4133377**
33379	**R4133379**
33380	**R4133380**
33390	**R4133390**
33396	**R4133396**
33400	**R4133400**
33406	**R4133406**
33407	**R4133407**
33420	**R4133420**
33447	**R4133447**
33469	**R4133469**
33484	**R4133484**
33485	**R4133485**
33540	**R4133540**
33541	**R4133541**
33580	**R4133580**
33581	**R4133581**
33582	**R4133582**
33584	**R4133584**
33595	**R4133595**
33596	**R4133596**
33597	**R4133597**
33600	**R4133230**

BENDIX PART #	MERITOR PART #
33601	**R4133231**
33606	**R4133606**
33607	**R4033607**
33608	**R4133608**
33614	**R4133614**
33615	**R4133615**
33627	**R4133627**
33628	**R4133628**
33637	**R4133637**
33638	**R4133638**
33655	**R4133655**
33656	**R4133656**
33708	**R4133708**
33709	**R4133709**
33714	**R4133714**
33715	**R4133715**
33716	**R4133716**
33717	**R4133717**
33718	**R4133718**
33719	**R4133719**
33720	**R4133581**
33720	**R4133720**
33721	**R4133721**
33722	**R4133722**
33723	**R4133723**
33725	**R4133725**
33726	**R4133726**
33753	**R4133279**
33757	**R4533757**
33791	**R4133791**
33792	**R4133792**
33792	**R417365**
33792	**R418145**
33792	**R418162**
33851	**R4133851**
33858	**R4133858**
33885	**R4133858**
33891	**R4133891**
33892	**R4133892**
33893	**R4133893**
33894	**201179**
33894	**201180**
33895	**201180**
33896	**201181**
33897	**201182**
33898	**201183**
33899	**201184**

BENDIX PART #	MERITOR PART #
33900	**201185**
33901	**201186**
33904	**R4133904**
33905	**R4133905**
33906	**R4133906**
33907	**R417372**
33909	**R417374**
33915	**R4133915**
33916	**R4133916**
33930	**R4133930**
33945	**R4133945**
33946	**R4133946**
33953	**201179**
33954	**201180**
33955	**201181**
33956	**201182**
33958	**R4133958**
33961	**R4133961**
33962	**R4133962**
33971	**R417363**
33972	**R417365**
33973	**R417364**
33974	**R417366**
33976	**R417379**
33977	**R417381**
33985	**R4133958**
34002	**R4111283**
34003	**R4111284**
34004	**R4111286**
34005	**R4111285**
34007	**R4111282**
34008	**R417415**
34009	**R417416**
34010	**R417401**
34019	**R417398**
34020	**R417397**
34021	**R417420**
34022	**R417422**
34023	**R417421**
34024	**R417423**
34028	**R4134028**
34037	**R4134037**
34047	**R4134037**
34054	**R4134054**
34064	**R4134064**
34075	**R4134075**
34076	**R4134076**

COMPETITIVE CROSS REFERENCE LISTING

BENDIX PART #	MERITOR PART #
34082	**R4134082**
34102	**R4134102**
34139	**R4134139**
34140	**R4134140**
37082	**R4134082**
39975	**R417375**
48654	**R4148654**
49624	**R4049624**
55098	**R4255098**
55099	**R4255099**
55245	**R424237A**
55250	**R4255250**
55251	**60050150**
55252	**60050145**
55252	**60050145X**
55313	**R4255313**
55314	**R424237A**
55656	**R4255656**
55717	**R424237A**
55849	**R424153263**
55850	**R424153216**
66204	**R4066204**
66209	**R4066209**
66211	**R4066211**
66215	**R4066215**
66262	**R4166262**
66297	**R4166297**
66298	**R4166298**
66305	**R4066305**
66306	**R4066306**
66307	**R4166307**
66330	**R4066330**
66341	**R417402**
66342	**R417399**
66344	**R417417**
66345	**R417424**
66349	**R4066306**
66350	**R40107771**
66365	**R4066365**
66368	**SP7873S**
66369	**SP7895S**
66381	**R4066365**
66395	**R4066395**
66448	**R4166448**
66455	**R417382**
66456	**291000**
66466	**291000**

BENDIX PART #	MERITOR PART #
66466	**SP7888S**
66467	**291000**
66467	**SP7887S**
66469	**SP7895S**
66470	**SP7895S**
66471	**SP7873S**
66472	**SP7895S**
66473	**SP7873S**
66477	**SP7873S**
66478	**SP7880S**
66503	**60050146**
66504	**60050266**
66510	**R4166510**
66517	**R4066517**
66530	**R4066530**
66532	**R406532**
66544	**R4066544**
66549	**R402235118**
66550	**R4166550**
66557	**R4066557**
66587	**R4066587**
66599	**R4166599**
66603	**R44145054**
66620	**R4166620**
66684	**R4166684**
66689	**R4166689**
66713	**60050136**
66715	**R4066715**
66764	**R418188**
66778	**R4066778**
66780	**R4066780**
66781	**R4066781**
66818	**R415181**
66818	**R418187**
66819	**R4166819**
66820	**R4166820**
66821	**R4166821**
66822	**R4166822**
66848	**R4066848**
66851	**R4066851**
66852	**R4166852**
66852	**R4166852**
66859	**R4166550**
66872	**R4166872**
66880	**R4166550**
66882	**R4166882**
66886	**R4166852**

BENDIX PART #	MERITOR PART #
66889	**R4166689**
66897	**R4166819**
66897	**R4166897**
66900	**R415181**
66917	**R4166917**
66923	**R4166923**
66926	**R415181**
66926	**R4166926**
66928	**R415181**
66928	**R415194**
66929	**R4166926**
66935	**R4166935**
66968	**R415181**
77010	**R4577010**
77019	**R4577010**
77019	**R4577019**
77024	**R4577024**
77024	**R4577024**
77078	**R4577078**
77080	**R4577080**
77083	**R4577083**
77135	**R4577135**
77147	**R4577147**
77167	**R4577167**
77169	**R4577169**
77171	**R4577171**
77172	**R4577172**
77173	**R4577173**
77185	**R4577185**
77187	**R4577187**
77187	**R4577187**
77189	**R4577189**
77211	**R4577169**
77235	**R4577235**
77237	**R4577172**
77240	**R4577240**
77241	**R4577241**
77245	**R4577245**
77245	**R4577245**
77245	**R4577245**
77247	**R4577247**
77247	**R4577247**
77248	**R4577248**
77249	**R4577249**
77252	**R4577252**
77273	**R4577273**
77277	**R4577277**

COMPETITIVE CROSS REFERENCE LISTING

BENDIX PART #	MERITOR PART #
77295	**R4577295**
77295	**R4577295**
77296	**R4577296**
77297	**R4577297**
77298	**R4577298**
77299	**R4577299**
77300	**R4577300**
77309	**R4577309**
77310	**R4577078**
77311	**R4577311**
77312	**R4577312**
77313	**R4577309**
77314	**R4577314**
77315	**R4577315**
77316	**R4577316**
77317	**R4577317**
77320	**R4577320**
77320	**R4577320**
77321	**R4577321**
77321	**R4577321**
77325	**R4577240**
77327	**R4577327**
77328	**R4577328**
77329	**R4577329**
77330	**R4577330**
77332	**R4577332**
77333	**R4577333**
77334	**R4577334**
77335	**R4577335**
77340	**R4577340**
77349	**R4133597**
77351	**R4133597**
77364	**R4577364**
77366	**R4577366**
77373	**R4577373**
77378	**R4577378**
77379	**R4577379**
77380	**R4577380**
77387	**R4577387**
77388	**R4577388**
77415	**R4577415**
77416	**R4577416**
77417	**R4577417**
77418	**R4577418**
77419	**R4577419**
77420	**R458529**
77421	**R4577421**

BENDIX PART #	MERITOR PART #
77421	**R4577421**
77425	**R4577425**
77426	**R4577010**
77427	**R4577427**
77428	**R4577428**
77429	**R4577429**
77430	**R4577430**
77440	**R4577440**
77441	**R4577441**
77443	**R4577443**
77443	**R4577443**
77444	**R4577444**
77444	**R4577444**
77452	**R4577452**
77453	**R4577453**
77454	**R4577454**
77455	**R4577455**
77457	**R4577457**
77460	**R4577460**
77461	**R4577461**
77461	**R4577461**
77463	**R4577463**
77479	**R4577479**
77481	**R4577481**
77482	**R4511240**
77484	**R4577484**
77495	**R4577495**
77500	**R458634**
77503	**R4577503**
77512	**R4577512**
77513	**R4577503**
77514	**R4577503**
77537	**R4577537**
77544	**R4577544**
77548	**R4577332**
77548	**R4577548**
77549	**R4577333**
77558	**R4577558**
77559	**R4577559**
77560	**R4577560**
77564	**R4577564**
77565	**R4577565**
77596	**R4577596**
77597	**R4577597**
77612	**R4577612**
77613	**R4577613**
77614	**R4577614**

BENDIX PART #	MERITOR PART #
77631	**R4577631**
77676	**R4577676**
77686	**R4577686**
77760	**R4577760**
77761	**R4577761**
77765	**R4577765**
77765	**R4577765**
77766	**R4577766**
77767	**R4577767**
77768	**R4577768**
77769	**R4577769**
77773	**R4511245**
77787	**R4577787**
77788	**R4577788**
77799	**R4577799**
77810	**R4577810**
77825	**R4577810**
77826	**R4577826**
77841	**R4577841**
77845	**R4577845**
77851	**R4577851**
77852	**R4577544**
77857	**R4577857**
77860	**R4577860**
77865	**R4510645**
77868	**R4577868**
77868	**R4577868**
77870	**R4577870**
77870	**R4577870**
77900	**R4577900**
77901	**R4577901**
77909	**R4577909**
77914	**R4577914**
77915	**R4577915**
77921	**R4577921**
77922	**R4577171**
77923	**R4577826**
77926	**R4577810**
77927	**R4577927**
77928	**R4577928**
77937	**R4577870**
78001	**R4578001**
78016	**R4578016**
78068	**R4578068**
78071	**R4578071**
78072	**R4578072**
78083	**R4578083**

COMPETITIVE CROSS REFERENCE LISTING

BENDIX PART #	MERITOR PART #
78084	**R4578084**
78085	**R4578085**
78117	**R4578117**
78118	**R4578118**
78129	**R4578129**
78130	**R4578130**
78132	**R4578132**
78133	**R4578133**
78134	**R4578134**
78135	**R4578135**
78136	**R4578136**
78137	**R4578137**
78142	**R4578133**
78143	**R4578132**
78144	**R4578144**
78145	**R4578145**
78158	**R451554**
78159	**R4578159**
78165	**R4578165**
78166	**R4578166**
78169	**R4578169**
78182	**R4578182**
78183	**R4578183**
78184	**R4578184**
78185	**R4577277**
78187	**R4578187**
78188	**R4578188**
78206	**R4578206**
78208	**R4578208**
78209	**R4578209**
78210	**R4578210**
78218	**R4578218**
78219	**R4578219**
78224	**R4578224**
78226	**R4578226**
78227	**R4578227**
78258	**R4578258**
78259	**R4578259**
78267	**R4578267**
78303	**R4578303**
78305	**R4578305**
78312	**R4578312**
78313	**R4578313**
78324	**R4578324**
78325	**R4578325**
78326	**R4578326**
78327	**R4578327**

BENDIX PART #	MERITOR PART #
78331	**R4578331**
78332	**R4578332**
78332	**R4578332**
78333	**R4578333**
78357	**R4578357**
78360	**R4578360**
78386	**R4578386**
78387	**R4578387**
78392	**R4578392**
78403	**R4578403**
78403	**R4578403**
78410	**R4578410**
78437	**R4578437**
78438	**R4578438**
78460	**R4578460**
78460	**R4578460**
78480	**R4578480**
78548	**R4578548**
78557	**R4578557**
78610	**R4578610**
78618	**R4578618**
78666	**R4578666**
78772	**R4578772**
78774	**R4578774**
78787	**R4578787**
78787	**R4578787**
78790	**R4578790**
78802	**R4578802**
78824	**R4578824**
78825	**R4578825**
78843	**R4578843**
78872	**R4578872**
78873	**R4578873**
78874	**R4578874**
78876	**R4578876**
78880	**R4578880**
78881	**R4578881**
78885	**R4578885**
78897	**R4578897**
78898	**R4578898**
78899	**R4578899**
78912	**R4578912**
88312	**R4588312**
88344	**R4511250**
88472	**R4588472**
88519	**R4588519**
88530	**R4577479**

BENDIX PART #	MERITOR PART #
88558	**R4588558**
88561	**R4588561**
88564	**R4588564**
88651	**R4588651**
88651	**R4588651**
90021	**R4090021**
90029	**R4090029**
90055	**R402238231**
90070	**R4090070**
90070	**R4090070P**
90071	**69270757**
90096	**R4090096**
94008	**R41302861**
94009	**R41301198**
94010	**R41301198**
96002	**R4533757**
107771	**R40107771**
140023	**R44140023**
140037	**R44140037**
140253	**R44140253**
140264	**R44140264**
140267	**R44140267**
140278	**R44140278**
140315	**R44140315**
140316	**R44140316**
140344	**R44140278**
140344	**R44140344**
140362	**R44140362**
140363	**R44140363**
140365	**R44140365**
140386	**R44140386**
140387	**R44140387**
140388	**R44140388**
140396	**R44140386**
140397	**R44140397**
140401	**R44140401**
140408	**R44140408**
140409	**R44140409**
140449	**R44140449**
140450	**R44140450**
140468	**R44140468**
140479	**R44140479**
140490	**R441404090**
140493	**R44140493**
140496	**R44140496**
140501	**R44140316**
140504	**R44140504**

COMPETITIVE CROSS REFERENCE LISTING

BENDIX PART #	MERITOR PART #
140510	**R44140510**
140520	**R44140520**
140536	**R44140536**
140540	**R44140540**
140541	**R44140541**
140542	**R44140542**
140543	**R44140543**
140545	**R44140545**
140547	**R44140547**
140550	**R44140468**
140583	**R44140583**
140600	**R44140600**
140604	**R44140604**
140613	**R44140388**
140619	**R44140387**
140619	**R44140619**
140619	**R44140619**
140620	**R44140620**
140620	**R44140620**
140622	**R44140622**
140624	**R44140541**
140657	**R44140657**
140657	**R44140657**
140658	**R44140658**
140675	**R44140675**
140679	**R44140679**
140682	**R44140682**
140685	**R44140685**
140686	**R44140686**
140712	**R44140712**
140716	**R44140716**
140722	**R4578872**
140724	**R44140724**
141043	**R44141043**
141049	**R44141049**
141067	**R44141067**
141088	**R44141088**
141089	**R44141089**
141127	**R44141127**
141130	**R44141130**
141152	**R44141152**
141153	**R44141153**
141154	**R44141154**
141174	**R44141174**
141179	**R44141179**
141186	**R44141186**
141193	**R44141193**

BENDIX PART #	MERITOR PART #
141197	**R44141197**
141219	**R44141219**
141233	**R44141233**
141234	**R44141234**
141235	**R44141235**
141237	**R44141237**
141247	**R44141179**
141251	**R44141251**
141261	**R44141261**
141269	**23122700002**
141270	**23122691002**
141271	**23122687002**
141272	**23122729002**
141272	**23123489002**
141273	**23122527002**
141274	**23122701002**
141275	**23122703002**
141276	**23122743002**
141375	**R44141127**
141381	**R44141381**
141382	**R44141382**
141389	**R44141389**
141391	**R44141391**
141397	**R44141397**
141414	**R44141414**
141450	**R44141450**
141453	**R44141453**
141454	**R44141454**
141455	**R44141455**
141457	**R44141457**
141468	**R44141468**
141469	**R44141469**
141475	**23-123572-004**
141476	**23-123573-004**
141477	**R44141477**
141480	**R44141480**
141481	**R44141481**
141482	**R44141482**
141483	**R44141483**
141487	**R44141487**
141488	**R44141488**
141489	**23123041002**
141490	**23123046002**
141493	**23122920002**
141494	**23122897002**
141495	**R44141455**
141505	**R44141127**

BENDIX PART #	MERITOR PART #
141507	**R44141507**
141508	**R44141508**
141540	**R44141540**
141547	**R44141547**
141583	**R44141583**
141584	**23122687002**
141585	**23122688002**
141586	**R44141586**
141599	**R44141599**
141599	**R44141599**
141606	**23122693002**
141607	**23122729002**
141608	**R44141608**
141621	**R44141621**
141627	**R44141627**
141628	**R44141628**
141629	**R44141629**
141630	**R44141630**
141663	**R44141663**
141664	**R44141664**
141730	**R44141730**
141741	**R44141741**
141770	**R4411260**
141770	**R44141770**
141798	**R44141798**
141806	**R44141806**
141808	**R44141174**
141808	**R44141808**
141818	**R44141818**
141829	**R44141829**
141856	**R44141856**
141858	**R44141858**
141859	**R44141859**
141860	**R44141599**
141860	**R44141599**
141861	**R44141861**
141862	**R44141862**
141866	**R44141866**
141874	**23123296002**
141877	**23122687002**
141903	**R44141903**
141906	**R44141906**
141917	**R44141917**
141922	**R44141922**
141923	**R44141923**
141924	**R44141924**
141927	**R44141927**

COMPETITIVE CROSS REFERENCE LISTING

BENDIX PART #	MERITOR PART #
141927	**R449886**
141934	**R44141934**
145027	**R4411316**
145028	**R44145028**
145028	**R44145028**
145049	**R44145049**
145050	**R44145050**
145054	**R44145054**
145055	**R44145055**
145057	**R44145057**
145058	**23123439002**
145065	**R44145065**
145068	**R44145068**
145071	**R44145071**
145075	**R44145075**
145107	**R44145107**
145108	**R44145108**
145134	**R44145134**
145139	**R44145139**
145141	**R44145141**
145145	**R44145145**
145152	**R44145152**
145162	**R44145162**
145186	**R44145071**
145192	**R44145068**
145192	**R44145192**
145202	**R44145202**
145245	**R44145245**
145251	**R44145251**
145255	**R44145255**
145256	**R44145256**
145257	**R44145257**
145258	**R44145258**
145259	**R44145259**
145260	**R44145260**
145261	**R44145261**
145262	**R44145262**
145267	**R44145267**
145268	**R44145268**
145274	**R44145274**
145279	**R44145279**
145280	**R44145280**
145283	**R44145357**
145309	**R4466924**
145316	**R44145316**
145317	**R44145317**
145325	**R44145325**

BENDIX PART #	MERITOR PART #
145339	**R44145339**
145345	**R44145345**
145357	**R44145357**
145360	**R44145360**
145368	**R44145368**
145452	**R44145452**
145456	**R44145456**
145574	**23-123486-002**
145575	**23123495002**
301198	**R41301198**
302861	**R41302861**
616972	**R45616972**
616973	**R45616973**
618406	**R41618406**
2235118	**R402235118**
2238231	**R402238231**
2238679	**R4011758**
3213580	**R4011752**
4150389	**R402235118**
4151706	**R404151706**
4153216	**R424153216**
4153217	**R4011757**
4153219	**R4011758**
4153231	**R4011754**
4153232	**R4011754**
4153235	**R4011754**
4153264	**R4011751**
4153266	**R4011752**
4153300	**MD786**
4153301	**MD786A**
204022606	**R43204022606**
21493R	**R4421493R**
21503R	**R4421503R**
21513R	**R4421513R**
22915S	**R4122915S**
90013S	**R4090013S**
90015S	**R4090015S**
90018P	**R4090018P**
90018S	**R4090018S**
90019S	**R4090019S**
90019S	**R4090019S**
90020S	**R4090020S**
90020S	**R4090020S**
90023S	**R4090023S**
90028S	**R4090028S**
90063P	**R4090063P**
90063S	**R4090063S**

BENDIX PART #	MERITOR PART #
90068S	**R4090068S**
90072A	**69270702**
90074P	**R4090074P**
90085S	**R4090085S**
90087S	**R4090087S**
90088S	**R4090088S**
90100P	**R4090100P**
90101S	**R4090101S**
90126S	**R4090126S**
90180P	**R4090180P**
90186P	**R4090186P**
90192P	**R4090192P**
AF299	**R46299**
AF357	**R46357**
AF358	**R46358**
AF445	**R46445**
AF446	**R46446**
AF462	**R46462**
AF473	**R46473**
AF569	**R41569**
B308	**R45B308**
B312	**R45B312**
B320	**R45B320**
B330	**R45B330**
B340	**R45B340**
B351	**R45B351**
B360	**R45B360**
B408	**R45B408**
B412	**R45B412**
B420	**R45B420**
B430	**R45B430**
B440	**R45B440**
B451	**R45B451**
B460	**R45B460**
B508	**R45B508**
B512	**R45B512**
B520	**R45B520**
B530	**R45B530**
B540	**R45B540**
B551	**R45B551**
B560	**R45B560**
B608	**R45B608**
B612	**R45B612**
B620	**R45B620**
B630	**R45B630**
B640	**R45B640**
B651	**R45B651**

COMPETITIVE CROSS REFERENCE LISTING

BENDIX PART #	MERITOR PART #
B660	**R45B660**
BD125660	**R44145258**
BH38046	**R4577379**
D4749	**R44141508**
F12478	**R45F124053**
H102	**R40H102**
H111	**R40H111**
H1110	**R4049624**
H1110DP	**R4049624**
H1132	**R4023969**
H1177	**R40H1177**
H130	**R40H130**
H133	**R40H133**
H140	**R40H140**
H1456	**R40H1456**
H15009	**R40H15009**
H15039	**R40H15039**
H15051	**R40H15051**
H15068	**R40H15068**
H15070	**R40H15070**
H15074	**R40H15074**
H15086	**R40H15086**
H15087	**R40H15087**
H15088	**R40H15088**
H1600	**R40H1600**
H1601	**R40H1601**
H1805	**R40H1805**
H1807	**R40H1807**
H1808	**R40H1808**
H1842	**R40H1842**
H1843	**R40H1843**
H1860	**R40H1860**
H1861	**R40H1861**
H1864	**R40H1864**
H1865	**R40H1865**
H1868	**R40H1868**
H1869	**R40H1869**
H1875	**R40H1875**
H1879	**R40H1879**
H1900	**R40H1900**
H1901	**R40H1901**
H1902	**R40H1902**
H1903	**R40H1903**
H1909	**R40H1909**
H1916	**R40H1916**
H1917	**R40H1917**
H2527	**R40H2527**
H2528	**R40H2528**
H2529	**R40H2529**
H2534	**R40H2534**
H2535	**R40H2535**
H2544	**R40H2544**
H2545	**R40H2545**
H2576	**R40H2576**
H2586	**R40H2586**
H2587	**R40H2587**
H2588	**R40H2588**
H2589	**R40H2589**
H2590	**R40H2586**
H2591	**R40H2587**
H2596	**R40H2596**
H2597	**R40H2597**
H2598	**R40H2598**
H2599	**R40H2599**
H2622	**R40H2622**
H2623	**R40H2623**
H2638	**R40H2638**
H2643	**R40H2643**
H2644	**R40H2644**
H330	**R40H330**
H3500	**R40H3500**
H3501	**R40H3501**
H3502	**R40H3502**
H3503	**R40H3503**
H3510	**R40H3510**
H3511	**R40H3511**
H3514	**R40H3514**
H3524	**R40H3524**
H3534	**R404177**
H3535	**R404176**
H3536	**R40H3536**
H3537	**R40H3537**
H3538	**R40H3538**
H3539	**R40H3539**
H3540	**R40H3540**
H3541	**R40H3541**
H3556	**R404117A**
H3557	**R404116A**
H357	**R40H357**
H364	**R40H364**
H366	**R40H366**
H367	**R40H367**
H369	**R40H369**
H370	**R40H370**
H378	**R40H378**
H385	**R40H370**
H4019DP	**R40H4019DP**
H4030DP	**R40H4030DP**
H4030DP	**R40H4030DP**
H4049DP	**R40H4049DP**
H4072DP	**R40H4072DP**
H4073	**R40H4072DP**
H4073DP	**R40H4072DP**
H4074	**R40H4074**
H4074DP	**R40H4074**
H4075DP	**R40H4075DP**
H4087	**R40H4087**
H4087DP	**R40H4087**
H4090DP	**R40H4090DP**
H4100DP	**R40H4100DP**
H500	**R40H500**
H5004DP	**R40H5004DP**
H5010	**R40H5010**
H5010DP	**R40H5010**
H5016	**R40H5016**
H5025	**R40H05025**
H5025DP	**R40H05025**
H5045	**R40H5045**
H5045DP	**R40H5045**
H5074	**R40H5074**
H5074DP	**R40H5074**
H5083	**R40H5083**
H5083DP	**R40H5083**
H510	**R40H510**
H521	**R40H521**
H5412	**R40H5412**
H5420	**R40H5420**
H5422	**69160441**
H546	**R40H546**
H547	**R40H547**
H550	**R40H550**
H5500	**R40H5500**
H5509	**R407991**
H5516	**R40H5516**
H5519	**R40H5519**
H5522	**R40H5522**
H5523	**R40H5523**
H5529	**R40H5529**
H5533	**60050135**
H5536	**R40H5536**
H5536DP	**R40H5536**

COMPETITIVE CROSS REFERENCE LISTING

BENDIX PART #	MERITOR PART #
H5539	**R40H5500**
H5545	**R40H5545**
H5585	**60050135**
H5594	**R40H5594**
H5601	**R40H5601**
H5604	**R40H5604**
H5605	**R40H5605**
H5606	**R40H5606**
H5607	**R40H5607**
H5608	**R40H5608**
H5610	**R40H5536**
H5610DP	**R40H5536**
H5634	**R40H5519**
H5634	**R40H5634**
H5635	**R40H5522**
H5636	**60050153**
H5637	**R40H5523**
H5642	**60050135**
H5653	**R40H5653**
H5654	**R40H5654**
H5663	**R404151706**
H5664	**R40H5664**
H5707	**R40H5707**
H5719	**R40H5719**
H5735	**R40H5735**
H5788	**R40H5788**
H5808	**R40H5808**
H5815	**R40H5815**
H5841	**R40H5841**
H5858	**R40H5858**
H5864	**R4011132**
H5864	**R4011133**
H5864	**R40H5864**
H5864	**R40H5864**
H5866	**R40H5866**
H5873	**R40H5873**
H5875	**R40H5875**
H5895	**R4011234**
H5896	**R40H5896**
H5897	**R40H5897**
H5928	**R40H5928**
H5929	**R40H5929**
H5930	**R40H5930**
H5931	**R40H5931**
H595	**R40H595**
H596	**R40H596**
H5967	**R40H5967**

BENDIX PART #	MERITOR PART #
H597	**R40H597**
H5974	**R44145456**
H5975	**R40H5975**
H599	**R40H599**
H608	**R40H608**
H618	**R40H618**
H619	**R40H618**
H7044	**R40H7044**
H7046	**R40H7046**
H7055	**R40H7055**
H7055	**R40H7055**
H7128	**R40H7128**
H7133	**R40H7133**
H7145	**R40H7145**
H7146	**R40H7146**
H7149	**R40H7149**
H7181	**R40H7181**
H7199	**R40H7199**
H7225	**R40H7225**
H7230	**R40H7230**
H7249	**R40H7044**
H7276	**R40H7276**
H7284	**R40H7284**
H7299	**R40H7299**
H7324	**R40H7324**
H7357	**R407999**
H8200	**R40H8200**
H8202	**R40H8202**
H8203	**R40H8203**
H9200	**R40H9200**
H9201	**R40H9201**
H9202	**R40H9201**
H9204	**R40H9204**
H9206	**R40H9206**
H9207	**R40H9207**
H9209	**R404121**
H9210	**R404208**
H9219	**R40H9219**
H9220	**R40H9220**
H9223	**R40H9223**
H9224	**R40H9224**
H9235	**R40H618**
H9237	**R40H597**
H9237	**R40H9237**
H9238	**R40H9238**
L55098PREM	**R42LV55098**
L55099PREM	**R42LV55099**

BENDIX PART #	MERITOR PART #
L55199FM	**R42L55199**
L55199PREM	**R42LV55199**
L55200FM	**R42L55200**
L55200PREM	**R42LV55200**
L55250PREM	**R42LV55250**
L55252PREM	**60050145XV**
L55314PREM	**R42LV55717**
L55604M	**R4255604**
L55604M	**R42LV55604**
L55604PREM	**R42LV55604**
L55605M	**R4255605**
L55605M	**R42LV55605**
L55605PREM	**R42LV55605**
L55748M	**R4255748**
L55749M	**R4255749**
L55794PM	**R4255794**
L55795PM	**R4255795**
L55845PREM	**R42LV55245**
L55857PM	**R4255857**
L55858PM	**R4255858**
L55861PM	**R4255861**
L55862PM	**R4255862**
L55865PFM	**R4255865**
L55866PFM	**R4255866**
L55866PM	**R4255865**
L55866PM	**R4255866**
L55887PFM	**R4255887**
L55888PFM	**R4255888**
L55889PM	**R4255889**
L55890PM	**R4255890**
L56544M	**R4256544**
L56545M	**R4256545**
L56546M	**R4256546**
L56547M	**R4256547**
MK120HD	**MD120**
MK149HD	**MD149**
MK184PREM	**MVD380**
MK224HD	**MD224**
MK224PREM	**MVD224**
MK225HD	**MD225**
MK225PREM	**MVD225**
MK236HD	**MD236**
MK236PREM	**MVD236**
MK379HD	**MD379**
MKD120	**MVD120**
MKD149	**MVD149**
MKD153	**MVD392**

COMPETITIVE CROSS REFERENCE LISTING

BENDIX PART #	MERITOR PART #
MKD184	**MVD380**
MKD184FE	**MVD380**
MKD224	**MVD224**
MKD224FE	**MD224**
MKD225	**MVD225**
MKD225FE	**MD225**
MKD236	**MVD236**
MKD236FE	**MD236**
MKD50	**MVD50**
MKD505	**MVD505**
MKD557	**MVD557**
MKD786	**MVD786**
MKD786A	**MVD786A**
R55060	**R42R55060**
R55061	**R42R55061**
R55094	**R42R55094**
R55095	**R42R55095**
R55098	**R424235X**
R55099	**R424236X**
R55116	**R42R55116**
R55117	**R42R55117**
R55118	**R42R55118**
R55119	**R42R55119**
R55193	**R42R55193**
R55194	**R42R55194**
R55199	**R42R55199**
R55200	**R42R55200**
R55205	**R42R55205**
R55206	**R42R55206**
R55207	**R42R55207**
R55208	**R42R55208**
R55209	**R42R55209**
R55210	**R42R55210**
R55215	**R42R55215**
R55216	**R42R55216**
R55233	**R42R55233**
R55234	**R42R55234**
R55243	**R42R55243**
R55244	**R42R55244**
R55245	**R42R55245**
R55248	**R42R55248**
R55249	**R42R55249**
R55250	**R424238X**
R55251	**60050150X**
R55252	**60050145X**
R55254	**R42R55254**
R55255	**R42R55255**

BENDIX PART #	MERITOR PART #
R55258	**R42R55258**
R55259	**R42R55259**
R55264	**R42R55264**
R55265	**R42R55265**
R55278	**R42R55278**
R55279	**R42R55279**
R55292	**R42R55254**
R55293	**R42R55255**
R55304	**R42R55304**
R55305	**R42R55305**
R55313	**R4211118X**
R55314	**R424237AX**
R55381	**R42R55381**
R55382	**R42R55382**
R55383	**R42R55207**
R55384	**R42R55208**
R55411	**R42R55411**
R55412	**R42R55412**
R55413	**R42R55413**
R55414	**R42R55413**
R55454	**R42R55454**
R55455	**R42R55455**
R55456	**R42R55456**
R55457	**R42R55456**
R55460	**R42R55460**
R55460P	**R42R55460P**
R55461	**R42R55461**
R55461P	**R42R55461P**
R55496	**R42R55496**
R55497	**R42R55497**
R55498	**R42R55498**
R55499	**R42R55499**
R55500	**R42R55500**
R55501	**R42R55501**
R55506	**R42R55506**
R55507	**R42R55507**
R55518	**R42R55518**
R55519	**R42R55519**
R55520	**R42R55520**
R55521	**R42R55521**
R55590	**R42R55590**
R55591	**R42R55591**
R55604	**R4255604**
R55604	**R42R55604**
R55605	**R4255605**
R55605	**R42R55605**
R55616	**R42R55616**

BENDIX PART #	MERITOR PART #
R55617	**R42R55617**
R55630	**R42R55630**
R55631	**R42R55631**
R55634	**R42R55634**
R55635	**R42R55635**
R55656	**R4210685X**
R55687	**R4211252X**
R55688	**R4211254X**
R55717	**R424237AX**
R55736	**R4211220X**
R55737	**R4211221X**
R55748	**R4255748**
R55749	**R4255749**
R55827	**R4255604**
R55828	**R4255605**
R55849	**R424153263**
R55850	**R424153216**
R55857	**R4255857**
R55858	**R4255858**
R55865	**R4255865**
R55866	**R4255866**
R55887	**R4255887**
R55888	**R4255888**
R55889	**R4255889**
R55890	**R4255890**
R55915	**R4255915**
R55916	**R4255916**
R55972	**R4255966**
R55972	**R4255972**
R55973	**R4255967**
R55973	**R4255973**
SL55988	**R4255988**
SL55989	**R4255989**
SP8705	**R4577481**

COMPETITIVE CROSS REFERENCE LISTING

NEW FORMULA BLUE PART NO.	MERITOR PART NO.
E13984020	**201179**
E13984020	**201179**
E13984021	**201180**
E13984021	**201180**
E13984022	**201181**
E13984023	**201182**
E13984024	**201183**
E13984024	**201183**
E13984025	**201184**
E13984025	**201184**
E13984026	**201185**
E13984027	**201186**
E12270008	**60050135**
E14870010	**60050136**
E146840062	**60050145**
E146841062	**60050150**
E12588006	**23122527002**
E12585013	**23122687002**
E12613013	**23122687002**
E12685009	**23122688002**
E12584019	**23122691002**
E12584020	**23122700002**
E12684020	**23122700002**
E12588007	**23122701002**
E12584021	**23122703002**
E12585014	**23123041002**
E12585015	**23123046002**
E12585016	**23123296002**
E12613016	**23123296002**
E12584027	**23123439002**
E12684027	**23123439002**
E12585006	**23123489002**
E12613006	**23123489002**
E12588019	**23-123550-004**
E12588018	**23-123552-004**
E12588020	**23-123572-004**
E14684006	**60050145X**
E146840061	**60050145X**
E14684106	**60050150X**
E146841061	**60050150X**
E11101530	**MD153**
E11101540	**MD154**
E11107170	**MD184**
E11101840	**MD184**
E11102240	**MD224**
E11102250	**MD225**

NEW FORMULA BLUE PART NO.	MERITOR PART NO.
E11102360	**MD236**
E11103680	**MD368**
E11103690	**MD369**
E11103750	**MD375**
E11104590	**MD459**
E11100520	**MD52**
E11105570	**MD557**
E11105910	**MD591**
E11106320	**MD632**
E11106520	**MD652**
E11106550	**MD655**
E11107020	**MD702**
E11107860	**MD786**
E11107861	**MD786A**
E11108210	**MD821**
E11108250	**MD825**
E11108260	**MD826**
E11108270	**MD827**
E10908210	**MD859**
E11109280	**MD928**
E11109490	**MD949**
E11109500	**MD950**
E10909650	**MD965**
E11109650	**MD965**
E11009741	**MD974**
E11109741	**MD974**
E11109740	**MD974**
E10704500	**MVD120**
E11104500	**MVD120**
E11105430	**MVD149**
E10901540	**MVD154**
E10902150	**MVD215**
E10902240	**MVD224**
E10902250	**MVD225**
E10902360	**MVD236**
E10902590	**MVD259**
E10903680	**MVD368**
E10903690	**MVD369**
E10903750	**MVD375**
E11103790	**MVD379**
E10901840	**MVD380**
E10901530	**MVD392**
E10704330	**MVD433**
E11104330	**MVD433**
E10904590	**MVD459**
E10904770	**MVD477**

NEW FORMULA BLUE PART NO.	MERITOR PART NO.
E10900500	**MVD50**
E10905050	**MVD505**
E10900520	**MVD52**
E10905240	**MVD521**
E10905220	**MVD522**
E10905290	**MVD529**
E10905570	**MVD557**
E10905910	**MVD591**
E10906420	**MVD591**
E10906010	**MVD601**
E10906320	**MVD632**
E10906520	**MVD652**
E10906550	**MVD655**
E11105460	**MVD675**
E10907020	**MVD702**
E11107021	**MVD702**
E10907110	**MVD711**
E11007290	**MVD729**
E11107290	**MVD729**
E11107690	**MVD769**
E11107770	**MVD777**
E11107840	**MVD784**
E11007850	**MVD785**
E11107850	**MVD785**
E10907860	**MVD786**
E10707860	**MVD786A**
E10908020	**MVD802**
E10907560	**MVD824**
E11107560	**MVD824**
E11109090	**MVD909**
E13570008	**R148228**
E13670008	**R148228**
E12270014	**R4011132**
E12266032	**R4011234**
E13966013	**R4033607**
E12385007	**R404121**
E14867024	**R4066715**
E14867026	**R4066848**
E12467042	**R40H2527**
E12469008	**R40H2544**
E12463006	**R40H2545**
E12467018	**R40H2586**
E12467019	**R40H2587**
E12473010	**R40H2588**
E12473011	**R40H2589**
E12473012	**R40H2598**

COMPETITIVE CROSS REFERENCE LISTING

NEW FORMULA BLUE PART NO.	MERITOR PART NO.
E12473013	**R40H2599**
E12467028	**R40H2622**
E12467029	**R40H2623**
E12467037	**R40H2638**
E12471010	**R40H2643**
E12471011	**R40H2644**
E12485006	**R40H3500**
E12485007	**R40H3501**
E12484008	**R40H3502**
E12484009	**R40H3503**
E12485008	**R40H3510**
E12485009	**R40H3511**
E12487006	**R40H3524**
E12484006	**R40H3536**
E12484007	**R40H3537**
E12484010	**R40H3538**
E12484011	**R40H3539**
E12487010	**R40H3540**
E12487011	**R40H3541**
E12267016	**R40H5500**
E12268008	**R40H5516**
E12268010	**R40H5519**
E12271011	**R40H5519**
E12245006	**R40H5522**
E12284007	**R40H5523**
E12272006	**R40H5529**
E12267019	**R40H5536**
E12266023	**R40H5653**
E12267027	**R40H5707**
E12267035	**R40H5788**
E12270010	**R40H5808**
E12270012	**R40H5815**
E12270013	**R40H5858**
E12270015	**R40H5875**
E12270016	**R40H5896**
E12271015	**R40H5930**
E12387007	**R40H597**
E12367022	**R40H7046**
E12370009	**R40H7146**
E12366027	**R40H7181**
E12366019	**R40H7225**
E12368017	**R40H7276**
E12366026	**R40H7299**
E12367032	**R40H7324**
E12387008	**R40H9200**
E12387006	**R40H9201**

NEW FORMULA BLUE PART NO.	MERITOR PART NO.
E12385006	**R40H9206**
E12387010	**R40H9219**
E12384009	**R40H9220**
E12387011	**R40H9223**
E12385009	**R40H9238**
E13571034	**R4110372**
E13671034	**R4110372**
E13671036	**R4110376**
E13570059	**R4110382**
E13584013	**R4110435**
E13584019	**R4110435**
E13584006	**R4111046**
E13588007	**R4111119**
E13588008	**R4111120**
E13588009	**R4111122**
E13588010	**R4111123**
E13584007	**R4111129**
E13584008	**R4111150**
E14184007	**R4111161**
E14384006	**R4111206**
E13584011	**R4111266**
E13588018	**R4111294**
E14184008	**R4111318**
E14384012	**R4111320**
E13585010	**R4111451**
E13585012	**R4111455**
E13585013	**R4111456**
E14375006	**R4111466**
E14175006	**R4111467**
E14188008	**R4111468**
E13572007	**R4111494**
E13573006	**R4111583**
E13571010	**R4111584**
E13671010	**R4111584**
E13588011	**R4111619**
E13584028	**R4111622**
E13584017	**R4111632**
E13571011	**R4111641**
E13671011	**R4111668**
E13570051	**R4111682**
E13670051	**R4111682**
E13571013	**R4111730**
E13671013	**R4111730**
E14384007	**R4111768**
E13585017	**R4111773**
E13572011	**R4111775**

NEW FORMULA BLUE PART NO.	MERITOR PART NO.
E13672011	**R4111775**
E13570028	**R4111854**
E13670028	**R4111854**
E13585020	**R4111885**
E13585021	**R4111892**
E13588015	**R4111908**
E13584021	**R4111909**
E13588016	**R4111910**
E13584022	**R4111911**
E13588017	**R4111912**
E14384015	**R4111916**
E13667006	**R4111944**
E13571017	**R4111982**
E13671017	**R4111982**
E13571018	**R4111989**
E13671018	**R4111989**
E13584025	**R4111992**
E13587007	**R4111993**
E13584026	**R4111995**
E13584030	**R4111999**
E13570036	**R4112008**
E13670036	**R4112008**
E13571019	**R4112029**
E13571020	**R4112058**
E13671020	**R4112058**
E13585019	**R4112066**
E14170014	**R4112117**
E14170006	**R4112118**
E14370006	**R4112120**
E13570006	**R4112198**
E13670006	**R4112198**
E13571026	**R4112219**
E13671026	**R4112219**
E13570039	**R4112357**
E13670039	**R4112357**
E13570042	**R4112575**
E13670042	**R4112575**
E13570046	**R4112840**
E13570047	**R4112843**
E13670047	**R4112843**
E13571035	**R4113056**
E13671035	**R4113056**
E13571036	**R4113057**
E14371011	**R4113207**
E13570098	**R4113284**
E13570058	**R4113355**

COMPETITIVE CROSS REFERENCE LISTING

NEW FORMULA BLUE PART NO.	MERITOR PART NO.
E13572028	**R4113442**
E13969009	**R4133003**
E13969010	**R4133004**
E13969018	**R4133004**
E14069010	**R4133004**
E13969011	**R4133005**
E13969019	**R4133005**
E14069011	**R4133005**
E13987008	**R4133136**
E13973011	**R4133207**
E14073011	**R4133207**
E13969006	**R4133230**
E14069006	**R4133230**
E13969007	**R4133231**
E14069007	**R4133231**
E13984006	**R4133256**
E13987009	**R4133257**
E13973014	**R4133278**
E13973015	**R4133279**
E13987010	**R4133312**
E13987012	**R4133315**
E13987013	**R4133316**
E13985006	**R4133320**
E13985007	**R4133321**
E13987015	**R4133335**
E13985010	**R4133336**
E13967010	**R4133338**
E13984007	**R4133366**
E13984008	**R4133367**
E13985011	**R4133376**
E13985012	**R4133377**
E13985013	**R4133379**
E13985014	**R4133380**
E13987016	**R4133390**
E13988010	**R4133396**
E13967011	**R4133400**
E13985015	**R4133406**
E13985016	**R4133407**
E13987017	**R4133420**
E13967006	**R4133469**
E14067006	**R4133469**
E13969017	**R4133484**
E13969016	**R4133485**
E13987020	**R4133580**
E13987021	**R4133581**
E13984016	**R4133581**
E13987022	**R4133582**
E13987023	**R4133584**
E13975011	**R4133595**
E14012011	**R4133595**
E13975012	**R4133596**
E14012012	**R4133596**
E13984011	**R4133606**
E13967007	**R4133608**
E14067007	**R4133608**
E13966011	**R4133627**
E14066011	**R4133627**
E13966012	**R4133628**
E14066012	**R4133628**
E13971016	**R4133655**
E13971017	**R4133656**
E13971018	**R4133708**
E14071018	**R4133708**
E13971019	**R4133709**
E14071019	**R4133709**
E13987024	**R4133714**
E13987025	**R4133715**
E13984012	**R4133716**
E13984013	**R4133717**
E13984014	**R4133718**
E13984015	**R4133719**
E13984017	**R4133721**
E13984018	**R4133722**
E13984019	**R4133723**
E13970011	**R4133725**
E14070011	**R4133725**
E13970012	**R4133726**
E14070012	**R4133726**
E13973020	**R4133791**
E14073020	**R4133791**
E13972017	**R4133858**
E14072017	**R4133858**
E13988012	**R4133905**
E13988013	**R4133906**
E13984028	**R4133915**
E13984029	**R4133916**
E13970018	**R4133945**
E13970019	**R4133946**
E13971023	**R4133961**
E14071023	**R4133961**
E13970020	**R4134028**
E14070020	**R4134028**
E13971025	**R4134037**
E14071025	**R4134037**
E13971028	**R4134082**
E14071028	**R4134082**
E13972021	**R4134102**
E14072021	**R4134102**
E13970033	**R4134139**
E13970032	**R4134140**
E11705810	**R41581**
E14987020	**R4166689**
E14969014	**R4166822**
E14987021	**R4166917**
E13973021	**R417365**
E14073021	**R417365**
E13981014	**R417379**
E13981016	**R417381**
E14688006	**R4210685X**
E146880061	**R4210685X**
E14675008	**R4211118X**
E146750081	**R4211118X**
E146710261	**R4211252X**
E146710271	**R4211254X**
E146700361	**R4211435X**
E14670037	**R4211436X**
E146700371	**R4211436X**
E146710151	**R424235X**
E146710141	**R424236X**
E14671017	**R424236X**
E146750062	**R424237A**
E146750072	**R424237A**
E146750061	**R424237AX**
E146750071	**R424237AX**
E14685008	**R424238X**
E146850081	**R424238X**
E146710152	**R4255098**
E146710142	**R4255099**
E146850082	**R4255250**
E146750082	**R4255313**
E146880062	**R4255656**
E14671014	**R42R55199**
E14671015	**R42R55200**
E14667072	**R42R55264**
E14667057	**R42R55265**
E14670024	**R42R55411**
E146700241	**R42R55411**
E14670025	**R42R55412**

COMPETITIVE CROSS REFERENCE LISTING

NEW FORMULA BLUE PART NO.	MERITOR PART NO.
E146700251	**R42R55412**
E14670022	**R42R55413**
E146700281	**R42R55460**
E146700291	**R42R55461**
E146710241	**R42R55496**
E146710251	**R42R55497**
E146710061	**R42R55498**
E146710071	**R42R55499**
E146710231	**R42R55501**
E14670020	**R42R55604**
E146700201	**R42R55604**
E146700211	**R42R55605**
E14671012	**R42R55853**
E14671013	**R42R55854**
E14671008	**R42R55855**
E14671009	**R42R55856**
E146700481	**R42R55861**
E146700491	**R42R55862**
E12571036	**R4411316**
E12671036	**R4411316**
E12771005	**R44140023**
E12871005	**R44140023**
E12772009	**R44140264**
E12872009	**R44140264**
E12772007	**R44140267**
E12872007	**R44140267**
E12770019	**R44140278**
E12870019	**R44140278**
E12770017	**R44140278**
E12870017	**R44140278**
E12771015	**R44140316**
E12871015	**R44140316**
E12770020	**R44140362**
E12771014	**R44140363**
E12871014	**R44140363**
E12771034	**R44140388**
E12871034	**R44140388**
E12771020	**R44140449**
E12871020	**R44140449**
E12770031	**R44140468**
E12770030	**R44140504**
E12870030	**R44140504**
E12770032	**R44140520**
E12870032	**R44140520**
E12771025	**R44140540**
E12871025	**R44140540**

NEW FORMULA BLUE PART NO.	MERITOR PART NO.
E12771026	**R44140541**
E12871026	**R44140541**
E12772025	**R44140542**
E12872025	**R44140542**
E12771023	**R44140543**
E12871023	**R44140543**
E12770034	**R44140545**
E12870034	**R44140545**
E12772018	**R44140547**
E12872018	**R44140547**
E12771038	**R44140600**
E12770040	**R44140620**
E12870040	**R44140620**
E12771036	**R44140622**
E12871036	**R44140622**
E12772031	**R44140657**
E12872031	**R44140657**
E12772032	**R44140658**
E12872032	**R44140658**
E12770041	**R44140675**
E12870041	**R44140675**
E12772035	**R44140685**
E12872035	**R44140685**
E12772036	**R44140686**
E12872036	**R44140686**
E12770044	**R44140712**
E12870044	**R44140712**
E12772040	**R44140716**
E12872040	**R44140716**
E12571005	**R44141043**
E12671005	**R44141043**
E12573006	**R44141049**
E12673006	**R44141049**
E12570006	**R44141067**
E12670006	**R44141067**
E12572008	**R44141089**
E12672008	**R44141089**
E12570011	**R44141127**
E12670011	**R44141127**
E12571006	**R44141130**
E12671006	**R44141130**
E12671007	**R44141152**
E12571010	**R44141186**
E12671010	**R44141186**
E12572009	**R44141193**
E12672009	**R44141193**

NEW FORMULA BLUE PART NO.	MERITOR PART NO.
E12670015	**R44141234**
E12570017	**R44141237**
E12670017	**R44141237**
E12571011	**R44141261**
E12671011	**R44141261**
E12572012	**R44141382**
E12672012	**R44141382**
E12584023	**R44141450**
E12571014	**R44141453**
E12671014	**R44141453**
E12570025	**R44141455**
E12670025	**R44141455**
E12571009	**R44141468**
E12567047	**R44141477**
E12667047	**R44141477**
E12571020	**R44141480**
E12671020	**R44141480**
E12571015	**R44141482**
E12671015	**R44141482**
E12571023	**R44141483**
E12671023	**R44141483**
E12570031	**R44141487**
E12670031	**R44141487**
E12571025	**R44141508**
E12671025	**R44141508**
E12585010	**R44141583**
E12613010	**R44141583**
E12545027	**R44141586**
E12570032	**R44141599**
E12588012	**R44141608**
E12566034	**R44141621**
E12666034	**R44141621**
E12588013	**R44141627**
E12588008	**R44141628**
E12588014	**R44141629**
E12672029	**R44141663**
E12581006	**R44141730**
E12681006	**R44141730**
E12570042	**R44141798**
E12670042	**R44141798**
E12670013	**R44141808**
E12571032	**R44141818**
E12671032	**R44141818**
E12571030	**R44141829**
E12671030	**R44141829**
E12588005	**R44141858**

COMPETITIVE CROSS REFERENCE LISTING

NEW FORMULA BLUE PART NO.	MERITOR PART NO.
E12571035	**R44141859**
E12671035	**R44141859**
E12571029	**R44141861**
E12671029	**R44141861**
E12571026	**R44141862**
E12671026	**R44141862**
E12571028	**R44141866**
E12671028	**R44141866**
E12566056	**R44141903**
E12570045	**R44141906**
E12670045	**R44141906**
E12570043	**R44141917**
E12670043	**R44141917**
E12572035	**R44141923**
E12672035	**R44141923**
E12572036	**R44141927**
E12571037	**R44145028**
E12671037	**R44145028**
E12570050	**R44145049**
E12670050	**R44145049**
E12566054	**R44145050**
E12570049	**R44145054**
E12670049	**R44145054**
E12570058	**R44145055**
E12670058	**R44145055**
E12570051	**R44145057**
E12670051	**R44145057**
E12570048	**R44145068**
E12570047	**R44145071**
E12670047	**R44145071**
E12570059	**R44145075**
E12670059	**R44145075**
E12571040	**R44145107**
E12671040	**R44145107**
E12572040	**R44145108**
E12672040	**R44145108**
E12571039	**R44145134**
E12671039	**R44145134**
E12570066	**R44145139**
E12670068	**R44145141**
E12570067	**R44145145**
E12572044	**R44145152**
E12672044	**R44145152**
E12570069	**R44145162**
E12670069	**R44145162**
E12572045	**R44145202**

NEW FORMULA BLUE PART NO.	MERITOR PART NO.
E12672045	**R44145202**
E12570072	**R44145245**
E12670072	**R44145245**
E12570083	**R44145251**
E12670083	**R44145251**
E12570078	**R44145255**
E12670078	**R44145255**
E12570077	**R44145256**
E12670077	**R44145256**
E12570073	**R44145257**
E12570076	**R44145258**
E12670076	**R44145258**
E12571045	**R44145259**
E12671045	**R44145259**
E12571049	**R44145260**
E12671049	**R44145260**
E12571047	**R44145261**
E12671047	**R44145261**
E12571048	**R44145262**
E12671048	**R44145262**
E12570079	**R44145267**
E12670079	**R44145267**
E12570084	**R44145268**
E12670084	**R44145268**
E12670091	**R44145274**
E12570075	**R44145280**
E12670075	**R44145280**
E12571064	**R44145316**
E12570074	**R44145325**
E12670074	**R44145325**
E12571055	**R44145339**
E12671055	**R44145339**
E12585007	**R44145345**
E12572051	**R44145357**
E12672051	**R44145357**
E12572056	**R44145357**
E12672056	**R44145357**
E12571054	**R44145360**
E12571042	**R44145368**
E12572066	**R44145456**
E12672066	**R44145456**
E12570092	**R4466924**
E12670092	**R4466924**
E15585306	**R4510645**
E15585305	**R4511240**
E15573016	**R4511250**

NEW FORMULA BLUE PART NO.	MERITOR PART NO.
E15584007	**R451554**
E15570058	**R4577135**
E15584318	**R4577147**
E15571010	**R4577187**
E15570036	**R4577235**
E15571012	**R4577240**
E15571013	**R4577241**
E15571021	**R4577321**
E15571312	**R4577329**
E15571313	**R4577330**
E15571044	**R4577332**
E15571026	**R4577333**
E15572033	**R4577387**
E15572034	**R4577388**
E15571040	**R4577428**
E15584015	**R4577453**
E15584016	**R4577454**
E15584017	**R4577455**
E15584027	**R4577460**
E15584011	**R4577461**
E15571307	**R4577479**
E15585006	**R4577481**
E15585010	**R4577484**
E15585007	**R4577495**
E15588305	**R4577512**
E15571046	**R4577559**
E15571047	**R4577560**
E15571048	**R4577760**
E15571049	**R4577761**
E15571317	**R4577765**
E15571052	**R4577768**
E15571053	**R4577769**
E15588009	**R4577860**
E15585016	**R4577868**
E15584315	**R4577870**
E15571054	**R4577901**
E15572065	**R4578133**
E15572076	**R4578145**
E15570095	**R4578206**
E15571056	**R4578224**
E15571067	**R4578227**
E15571051	**R4578258**
E15571050	**R4578259**
E15584008	**R4578303**
E15570108	**R4578333**
E15571323	**R4578357**

COMPETITIVE CROSS REFERENCE LISTING

NEW FORMULA BLUE PART NO.	MERITOR PART NO.
E15571069	**R4578392**
E15572067	**R4578410**
E15571074	**R4578772**
E15571073	**R4578774**
E15571057	**R4578787**
E12772044	**R4578872**
E12872044	**R4578872**
E15570152	**R4578876**
E15588306	**R458634**
E15586007	**R4588312**
E15584022	**R4588558**
E15573023	**R4588561**
E15571309	**R4588651**
E11703570	**R46357**
E11703580	**R46358**
E11604450	**R46445**
E11704510	**R46451**
E11704520	**R46452**
E11704620	**R46462**
E11704730	**R46473**
E11705830	**R468140**
E11707050	**R46AF705**

CENTRIC PART #	MERITOR PART #
100.070	**MVD646**
100.073	**MVD734**
100.074	**MVD735**
106.005	**MVD52**
106.015	**MVD392**
106.015	**MVD154**
106.022	**MVD224**
106.023	**MVD225**
106.024	**MVD236**
106.037	**MVD369**
106.037	**MVD370**
106.038	**MVD375**
106.039	**MVD387**
106.041	**MVD411**
106.045	**MVD450**
106.046	**MVD459**
106.054	**MVD149**
106.055	**MVD675**
106.056	**MVD557**
106.063	**MVD632**
106.066	**MVD655**
106.070	**MVD702**
106.072	**MVD380**
106.076	**MVD756**
106.076	**MVD757**
106.077	**MD769**
106.078	**MVD777**
106.078	**MVD784**
106.079	**MVD785**
106.079	**MVD786**
106.079	**MVD786A**
106.080	**MVD802**
106.083	**MVD825**
106.083	**MVD826**
106.083	**MVD827**
106.091	**MVD909**
106.095	**MVD949**
106.101	**MVD1010**
106.106	**MVD1064**
110.036	**R46357**
110.045	**R46451**
111.036	**R46358**
111.045	**R46452**
111.047	**R46473**
111.058	**R468140**
112.036	**R46357**
112.036	**R46358**

CENTRIC PART #	MERITOR PART #
112.045	**R46451**
112.058	**R468140**
112.068	**R4112444**
117.620	**R40H5788**
117.630	**R40H5516**
117.650	**60050135**
117.650	**R40H5815**
117.650	**R40H5735**
117.660	**R40H5931**
117.670	**R40H5529**
117.760	**R4112503**
117.760	**R4112504**
118.610	**R40H608**
118.660	**R40H378**
118.740	**R4612442**
119.680	**R40H2588**
119.680	**R40H2589**
120.430	**R4421493R**
120.461	**R4212432**
120.461	**R4212451**
120.650	**R44141067**
120.650	**R44141127**
120.650	**R44141237**
120.650	**R44141455**
120.650	**R44141934**
120.650	**R44145071**
120.650	**R44145071**
120.650	**R44145068**
120.650	**R44145049**
120.650	**R44145057**
120.650	**R44145057**
120.651	**R44145162**
120.651	**R44145325**
120.651	**R44145280**
120.651	**R44145267**
120.651	**R44145268**
120.651	**R44145251**
120.651	**R44145268**
120.651	**R4466924**
120.660	**R44141130**
120.660	**R44141152**
120.660	**R44141186**
120.660	**R44141480**
120.660	**R44141483**
120.660	**R44141862**
120.660	**R44141859**
120.660	**R4411316**

COMPETITIVE CROSS REFERENCE LISTING

CENTRIC PART #	MERITOR PART #
120.660	**R44145028**
120.660	**R44145028**
120.660	**R44145134**
120.660	**R44145368**
120.660	**R44145259**
120.660	**R44145261**
120.660	**R44145360**
120.670	**R44141193**
120.670	**R44141382**
120.670	**R44141924**
120.740	**R4212450**
120.760	**R44141730**
120.790	**23122703002**
120.790	**23-123498-002**
120.790	**23123458002**
120.790	**23-123461-002**
120.790	**23-123528-002**
122.650	**R44140278**
122.650	**R44140504**
122.650	**R44140545**
122.650	**R44140493**
122.660	**R44140363**
122.660	**R44140388**
122.661	**R44140619**
122.670	**R44140267**
122.670	**R44140547**
122.670	**R44140542**
122.670	**R44140685**
122.670	**R44140686**
122.670	**R44140679**
122.740	**R4612443**
130.650	**R4112198**
130.650	**R148228**
130.650	**R4112197**
130.650	**R4112357**
130.650	**R4112840**
130.660	**R4111584**
130.660	**R4111641**
130.660	**R4111982**
130.660	**R4110372**
130.670	**R4112519**
130.670	**R4111775**
130.680	**R4111583**
130.760	**R4412506**
130.760	**R4412505**
134.610	**R4133627**
134.610	**R4133628**

CENTRIC PART #	MERITOR PART #
134.610	**R4033607**
134.620	**R4133469**
134.620	**R4133608**
134.640	**R4133230**
134.640	**R4133231**
134.640	**R4133004**
134.640	**R4133005**
134.640	**R4133485**
134.640	**R4133484**
134.640	**R4133004**
134.640	**R4133005**
134.650	**R4133725**
134.650	**R4133726**
134.650	**R4133945**
134.650	**R4133946**
134.660	**R4133708**
134.660	**R4133709**
134.670	**R4134102**
134.680	**R4133206**
134.680	**R4133207**
134.680	**R4133207**
134.740	**R4112446**
134.740	**R4112447**
134.740	**R4112448**
134.740	**R4112449**
134.830	**R4133396**
136.650	**R4113508**
136.790	**R4111161**
138.620	**R4112168**
138.630	**R4111959**
138.660	**R4113207**
138.700	**R4111466**
138.790	**R4111206**
141.650	**R4255604**
141.650	**R4255605**
141.650	**R42R55460**
141.650	**R42R55461**
141.650	**R42R55748**
141.650	**R42R55749**
141.655	**R42R55857**
141.655	**R42R55858**
141.660	**R42R55855**
141.660	**R42R55856**
141.660	**R42R55199**
141.660	**R42R55200**
141.660	**R42R55098**
141.660	**R42R55099**

CENTRIC PART #	MERITOR PART #
141.660	**R42R55496**
141.660	**R42R55497**
141.760	**R4212272X**
141.760	**R4212271X**
141.760	**R4212278X**
141.760	**R4212277X**
141.760	**R4212276**
141.760	**R4212275**
141.760	**R4212270**
141.760	**R4212269**
141.800	**R42R55805**
141.800	**R42R12067**
141.800	**R42R12068**
141.800	**R42R12069**
141.830	**R42R55849**
141.830	**R42R55850**
142.650	**R42LV55460**
142.650	**R42LV55461**
142.650	**R42LV55636**
142.650	**R42LV55637**
142.650	**R42LV55749**
142.650	**R42LV55748**
142.655	**R42LV55857**
142.655	**R42LV55858**
142.660	**R42LV55687**
142.660	**R42LV55688**
142.670	**R42LV55118**
142.670	**R42LV55119**
150.065	**R4578331**
150.650	**R4577312**
150.650	**R4577309**
150.651	**R4578332**
150.653	**R4578610**
150.654	**R4578618**
150.661	**R4578774**
150.661	**R4578772**
150.663	**R4577765**
150.670	**R4577317**
150.671	**R4578137**
150.671	**R4578136**
150.671	**R4577909**
150.673	**R4577915**
150.790	**R4577461**

COMPETITIVE CROSS REFERENCE LISTING

RAYBESTOS PART #	MERITOR PART #
1009	**R44140408**
1013	**R44140450**
1345	**R44140267**
1350	**R44140542**
1603	**R44140493**
1657	**R44140468**
1657	**R44140468**
1661	**R44140278**
1661	**R44140278**
1665	**R44140344**
1665	**R44140344**
1667	**R44140362**
1669	**R44140397**
1961	**R44140264**
2071	**R44140253**
2081	**R44140315**
2083	**R44140316**
2083	**R44140316**
2169	**R44140543**
2320	**R44140504**
2325	**R44140520**
2345	**R44140386**
2345	**R44140386**
2547	**R44140536**
2568	**R44140604**
2572	**R44140540**
2586	**R44140541**
2586	**R44140541**
2590	**R44140387**
2590	**R44140387**
2591	**R44140388**
2591	**R44140388**
2592	**R44140600**
2677	**R44140479**
2751	**R44140545**
2905	**R441404090**
2912	**R44140510**
2953	**R44140365**
2987	**R44140496**
3931	**R44141481**
5006	**R44141043**
5010	**R44141186**
5011	**R44141391**
5014	**R44141049**
5016	**R44141152**
5020	**R44141088**
5022	**R44141130**

RAYBESTOS PART #	MERITOR PART #
5036	**R44141261**
5038	**R44141219**
5046	**R44141468**
5046	**R44141469**
5064	**R44141233**
5925	**R44141483**
5937	**R44141806**
5962	**R44141453**
5973	**R44141457**
5973	**R44141488**
5974	**R44141540**
5976	**R44141482**
5977	**R44141454**
5980	**R44141480**
6032	**R44141067**
6050	**R44141127**
6050	**R44141127**
6050	**R44141127**
6052	**R44141154**
6054	**R44141153**
6058	**R44141174**
6058	**R44141174**
6070	**R44141197**
6074	**R44141235**
6078	**R44141234**
6084	**R44141237**
6141	**R44141599**
6141	**R44141599**
6163	**R44141487**
6978	**R44141808**
7009	**R44141381**
7022	**R44141193**
7023	**R44141089**
7040	**R44141382**
7054	**R44141397**
7864	**R44141664**
7929	**R44141389**
7979	**R44141414**
8005	**R44141630**
8022	**R44140409**
8024	**R44140449**
8027	**R44140363**
8102	**R44140547**
8510	**23122729002**
8510	**23122729002**
8510	**23122729002**
8514	**23122700002**

RAYBESTOS PART #	MERITOR PART #
8514	**23122700002**
8518	**23122701002**
8518	**23122701002**
8520	**23122527002**
8520	**23122527002**
8521	**23-123573-004**
8521	**23-123573-004**
8522	**R44141629**
8523	**23-123572-004**
8523	**23-123572-004**
8524	**R44141628**
8527	**R44141627**
8529	**R44141608**
8533	**23123296002**
8533	**23123296002**
8535	**R44141858**
9204	**R44141179**
9204	**R44141179**
9238	**R44141251**
9349	**R44140401**
9480	**R44140583**
9530	**R44140622**
9531	**R44140619**
9531	**R44140619**
9533	**R44140620**
9533	**R44140620**
9560	**R44140682**
9568	**R44140658**
9569	**R44140657**
9569	**R44140657**
9611	**R44141586**
9620	**R44140675**
9625	**R44140685**
9635	**R44140679**
9636	**R44140686**
9652	**R44140712**
9669	**R44140716**
9672	**R44140724**
9696	**R4578872**
9696	**R4578872**
46999	**R44145317**
56022	**R44141508**
56022	**R44141508**
56189	**R44141866**
56242	**R44141477**
56258	**R44141829**
56263	**R44141818**

COMPETITIVE CROSS REFERENCE LISTING

RAYBESTOS PART #	MERITOR PART #
56324	**R4411260**
56331	**R44141861**
56396	**R44141859**
56397	**R44141862**
56417	**R44141583**
56418	**23122687002**
56418	**23122687002**
56418	**23122687002**
56418	**23122687002**
56493	**R44145028**
56495	**R44145028**
56496	**R4411316**
56579	**R44145107**
56591	**R44145065**
56593	**R44145134**
56750	**R44145368**
56825	**R44145259**
56828	**R44145260**
56829	**R44145261**
56830	**R44145262**
56930	**2312344002**
56930	**2312344002**
56995	**23123489002**
56995	**23123489002**
56996	**23123495002**
56996	**23123495002**
60814	**R44141450**
64442	**R44141903**
66204	**R44141741**
66205	**R44141455**
66205	**R44141455**
66238	**R44141547**
66259	**R44141798**
66276	**R44141621**
66416	**R44141599**
66416	**R44141599**
66476	**R44145055**
66501	**23123439002**
66501	**23123439002**
66527	**R44145049**
66528	**R44145057**
66529	**R44145071**
66529	**R44145071**
66529	**R44145071**
66530	**R44145068**
66530	**R44145068**
66530	**R44145192**

RAYBESTOS PART #	MERITOR PART #
66603	**R44145054**
66648	**R44145145**
66653	**R44145141**
66671	**R44145139**
66695	**R44145162**
66746	**R44145245**
66749	**R44145050**
66761	**R44145325**
66768	**R44145267**
66785	**R44145255**
66786	**R44145256**
66789	**R44145279**
66798	**R44145257**
66799	**R44145251**
66823	**R44145258**
66823	**R44145258**
66824	**R44145280**
66834	**R44145268**
66914	**R44145274**
66924	**R4466924**
76025	**R44141663**
76395	**R44141922**
76399	**R44141924**
76452	**R44141923**
76465	**R44141927**
76465	**R449886**
76599	**R44145108**
76646	**R44145152**
76808	**R44145202**
76920	**R44145283**
96043	**R44141507**
96229	**R44141730**
96470	**R44141856**
580000	**R44145316**
780020	**R44145357**
780020	**R44145357**
780139	**R44145452**
780143	**R44145456**
780143	**R44145456**
05104758AA	**R4212490**
05104759AA	**R4212491**
27757B	**R4066306**
383MR	**R700383**
427MR	**R700427**
442MR	**R700442**
723N	**R46723**
723N	**R46723**

RAYBESTOS PART #	MERITOR PART #
BH36512	**R4588561**
BH36564	**R4577479**
BH36564	**R4577479**
BH36649	**R4588519**
BH36664	**R4588472**
BH36697	**R4511250**
BH36748	**R4577080**
BH36749	**R4577083**
BH36758	**R4577537**
BH36765	**R4588651**
BH36765	**R4588651**
BH36806	**R4588558**
BH36814	**R4577147**
BH36850	**R4577189**
BH36855	**R4577187**
BH36855	**R4577187**
BH36951	**R4577235**
BH36952	**R4577240**
BH36952	**R4577240**
BH36954	**R4577320**
BH36954	**R4577320**
BH36957	**R4577241**
BH36963	**R4577167**
BH36981	**R4577334**
BH36982	**R4577078**
BH36982	**R4577078**
BH36983	**R4577248**
BH36984	**R4577249**
BH36996	**R4577335**
BH38	**R4578410**
BH380002	**R4588312**
BH380039	**R4577927**
BH380040	**R4577928**
BH380045	**R4578182**
BH380046	**R4578183**
BH380075	**R4577277**
BH380075	**R4577277**
BH380077	**R4578188**
BH380143	**R458634**
BH380171	**R4511245**
BH380195	**R4578187**
BH380196	**R4578184**
BH380216	**R4578136**
BH380217	**R4578137**
BH380248	**R4578258**
BH380249	**R4578259**
BH380264	**R4578218**

COMPETITIVE CROSS REFERENCE LISTING

RAYBESTOS PART #	MERITOR PART #
BH380280	**R4577544**
BH380280	**R4577544**
BH380295	**R4578144**
BH380298	**R4578206**
BH380303	**R4578145**
BH380321	**R4578208**
BH380322	**R4578209**
BH380326	**R4578219**
BH380339	**R4578387**
BH380340	**R4578129**
BH380341	**R4578130**
BH380342	**R4578135**
BH380343	**R4578132**
BH380343	**R4578132**
BH380344	**R4578133**
BH380344	**R4578133**
BH380345	**R4578134**
BH380352	**R4578210**
BH380353	**R4578327**
BH380354	**R4578326**
BH380355	**R4578333**
BH380369	**R4578312**
BH380370	**R4578313**
BH380383	**R4578324**
BH380384	**R4578325**
BH380385	**R4578305**
BH380386	**R4578332**
BH380387	**R4578331**
BH380387	**R4578332**
BH38044	**R4577247**
BH38045	**R4577380**
BH38046	**R4577379**
BH38046	**R4577379**
BH380468	**R4578357**
BH380469	**R4578557**
BH38047	**R4577173**
BH38048	**R4577172**
BH38048	**R4577172**
BH38049	**R4577388**
BH380497	**R4577868**
BH380497	**R4577868**
BH38050	**R4577387**
BH380500	**R4510645**
BH380518	**R4578790**
BH380519	**R4578392**
BH380525	**R4510650**
BH380526	**R4510651**

RAYBESTOS PART #	MERITOR PART #
BH380527	**R4510652**
BH380533	**R4578403**
BH380533	**R4578403**
BH380534	**R4578460**
BH380534	**R4578460**
BH380541	**R4578438**
BH380553	**R4578514**
BH380554	**R4578513**
BH380555	**R4578516**
BH380556	**R4578515**
BH38058	**R4577297**
BH380587	**R4578772**
BH380588	**R4578774**
BH38059	**R4577295**
BH38059	**R4577295**
BH38061	**R4577296**
BH38066	**R4577298**
BH38068	**R4577010**
BH38068	**R4577010**
BH38068	**R4577010**
BH38068	**R4577019**
BH380747	**R4578386**
BH380752	**R4578438**
BH380753	**R451667**
BH380753	**R4578480**
BH38082	**R4577315**
BH38090	**R4577171**
BH38090	**R4577171**
BH38099	**R4577631**
BH380995	**R4577857**
BH38105	**R4577309**
BH38105	**R4577309**
BH38106	**R4577312**
BH38107	**R4577327**
BH38108	**R4577328**
BH381082	**R4577860**
BH381145	**R4512427**
BH381146	**R4512428**
BH381160	**R4578873**
BH381161	**R4578874**
BH381163	**R4578802**
BH381166	**R4512420**
BH381168	**R4512421**
BH38121	**R4577311**
BH381262	**R4512419**
BH381272	**R4578843**
BH381276	**R4578824**

RAYBESTOS PART #	MERITOR PART #
BH381276	**R4578825**
BH381280	**R4578876**
BH381298	**R4578880**
BH381299	**R4578881**
BH381367	**R4578885**
BH38138	**R4577415**
BH38139	**R4577416**
BH38166	**R4577332**
BH38166	**R4577332**
BH38167	**R4577333**
BH38167	**R4577333**
BH38171	**R4577169**
BH38171	**R4577169**
BH38182	**R4577417**
BH38183	**R4577418**
BH38184	**R4577429**
BH38185	**R4577430**
BH38186	**R4577321**
BH38186	**R4577321**
BH38199	**R4577316**
BH38200	**R4577317**
BH38212	**R4577503**
BH38212	**R4577503**
BH38212	**R4577503**
BH38244	**R4577565**
BH38245	**R4577378**
BH38256	**R4577676**
BH38261	**R4577558**
BH38264	**R4577329**
BH38265	**R458529**
BH38266	**R4577419**
BH38267	**R4577330**
BH38268	**R4577427**
BH38285	**R4577560**
BH38286	**R4577559**
BH38289	**R4577481**
BH38289	**R4577481**
BH38290	**R4577495**
BH38292	**R4577484**
BH38297	**R4588564**
BH38304	**R45F124053**
BH38307	**R4577457**
BH38311	**R4577454**
BH38312	**R4577455**
BH38313	**R4577686**
BH38314	**R4577452**
BH38315	**R4577453**

COMPETITIVE CROSS REFERENCE LISTING

RAYBESTOS PART #	MERITOR PART #
BH38316	**R4577460**
BH38317	**R4577461**
BH38317	**R4577461**
BH38320	**R4577135**
BH38332	**R4577613**
BH38334	**R4577614**
BH38339	**R4577612**
BH38421	**R4577024**
BH38421	**R4577024**
BH38453	**R4577425**
BH38454	**R4577428**
BH38510	**R4577512**
BH38520	**R4511240**
BH38535	**R4577252**
BH38563	**R4577421**
BH38576	**R4578085**
BH38605	**R4577799**
BH38620	**R4577760**
BH38621	**R4577761**
BH38622	**R4578224**
BH38623	**R4578787**
BH38623	**R4578787**
BH38624	**R4577765**
BH38624	**R4577765**
BH38629	**R4578165**
BH38630	**R4578618**
BH38631	**R4578666**
BH38633	**R4577921**
BH38635	**R4577548**
BH38636	**R4577810**
BH38636	**R4577810**
BH38636	**R4577810**
BH38637	**R4577845**
BH38642	**R4578166**
BH38662	**R4577766**
BH38663	**R4577767**
BH38664	**R4577768**
BH38665	**R4577769**
BH38742	**R4577914**
BH38743	**R4577909**
BH38744	**R4577826**
BH38744	**R4577826**
BH38745	**R4577915**
BH38747	**R4577841**
BH38764	**R4578267**
BH38808	**R4578226**
BH38810	**R4577463**

RAYBESTOS PART #	MERITOR PART #
BH38814	**R4578016**
BH38815	**R4578068**
BH38816	**R4577870**
BH38816	**R4577870**
BH38820	**R451534**
BH38823	**R4578360**
BH38824	**R4578548**
BH38851	**R4577901**
BH38852	**R4577900**
BH38867	**R451537**
BH38871	**R4577851**
BH38872	**R4578437**
BH38873	**R4578227**
BH38890	**R4578117**
BH38891	**R4578118**
BH38897	**R4578169**
BH38898	**R4578001**
BH38901	**R4578610**
BH38913	**R458635**
BH38947	**R451554**
BH38948	**R4578159**
BH38949	**R4577245**
BH38949	**R4577245**
BH38950	**R4578303**
BH38960	**R4577870**
CKS1939	**R4122210**
CMA33466	**R4111161**
CMA36126	**R4111318**
CMA36149	**R4111191**
CMA36153	**R4111467**
CMA36340	**R4111468**
CMA39386	**R4112073**
CMA39386	**R4112073**
CMA39560	**R4112117**
CMA39569	**R4112118**
CMA39573	**R4112119**
CMA39723	**R4111957**
CMA39730	**R4112169**
CMA39732	**R4112176**
CMA39813	**R4122204**
CMK1513	**R4122305**
CMK1931	**R4122205**
CMK1935	**R4122318**
CMK1956	**R4122204**
CMK212	**R4122882**
CMK430	**R4122908**
CMK432	**R4122872**

RAYBESTOS PART #	MERITOR PART #
CMK433	**R4122770**
CSK1836	**R4122211**
CSK1867	**R4122160**
CSK1867	**R4122160**
CSK1869	**R40H1869**
CSK1927	**R4122342**
CSK2156	**R4122151**
CSK259	**R4122893**
CSK328	**R4122697**
CSK328	**R4122915**
CSK437	**R4122915S**
D505	**MD505**
D505	**MD505**
D557	**MD557**
D557	**MD557**
DP85019	**R4090019S**
DP85020	**R4090018P**
DP85030	**R4090029**
DP85030	**R4090180P**
DP85051	**R4090021**
DP85051	**R4090021**
DP85055	**R4090020S**
DP85072	**R4090020S**
DP85072	**R4090063P**
DP85076	**R4090074P**
DP85080	**R4090070**
DP85080	**R4090070**
DP85080	**R4090070P**
DP85081	**69270757**
DP85082	**R402238231**
DP85082	**R402238231**
DP85082	**R402238231**
DP85417	**R4090096**
DP85432	**R4090192P**
DPA85084	**69270702**
DPS85010	**R4090013S**
DPS85016	**R4090015S**
DPS85019	**R4090019S**
DPS85020	**R4090018S**
DPS85032	**R4090028S**
DPS85050	**R4090068S**
DPS85072	**R4090063S**
DPS85155	**R4090088S**
DPS85156	**R4090101S**
DPS85157	**R4090087S**
DPS85158	**R4090085S**
DPS85205	**R4090126S**

COMPETITIVE CROSS REFERENCE LISTING

RAYBESTOS PART #	MERITOR PART #
DPS85392	**R4090186P**
FRC11171	**R424153263**
FRC11171	**R424153263**
FRC11173	**R424153216**
FRC11173	**R424153216**
FRC11173	**R424153216**
G1245	**R4533757**
G1245	**R4533757**
G3877	**R45616973**
H102	**R40H102**
H111	**R40H111**
H1132	**R4023969**
H1132	**R4023969**
H1177	**R40H1177**
H130	**R40H130**
H133	**R40H133**
H140	**R40H140**
H1456	**R40H1456**
H15020	**R40H5016**
H15171	**R40H15074**
H15527-2	**R40H5594**
H15792	**R40H5873**
H1805	**R40H1805**
H1807	**R40H1807**
H1808	**R40H1808**
H1842	**R40H1842**
H1843	**R40H1843**
H1860	**R40H1860**
H1861	**R40H1861**
H1864	**R40H1864**
H1865	**R40H1865**
H1868	**R40H1868**
H1876	**R40H1875**
H1879	**R40H1879**
H1900	**R40H1900**
H1901	**R40H1901**
H1902	**R40H1902**
H1903	**R40H1903**
H1909	**R40H1909**
H1916	**R40H1916**
H1917	**R40H1917**
H2527	**R40H2527**
H2528	**R40H2528**
H2529	**R40H2529**
H2534	**R40H2534**
H2535	**R40H2535**
H2544	**R40H2544**

RAYBESTOS PART #	MERITOR PART #
H2545	**R40H2545**
H2580	**R40H2588**
H2581	**R40H2589**
H-2584	**R40H2586**
H-2584	**R40H2586**
H2585	**R40H2587**
H2585	**R40H2587**
H2588	**R40H2598**
H2589	**R40H2599**
H2592	**R40H2596**
H2597	**R40H2597**
H2622	**R40H2622**
H2623	**R40H2623**
H2640	**R40H2643**
H2641	**R40H2644**
H2644	**R40H2638**
H324	**R40H369**
H325	**R40H370**
H325	**R40H370**
H330	**R40H330**
H333	**R40H378**
H336	**R40H367**
H338	**R40H357**
H338	**R40H366**
H345	**R40H364**
H3500	**R40H3500**
H3501	**R40H3501**
H3510	**R40H3510**
H3511	**R40H3511**
H3514	**R40H3514**
H3524	**R40H3524**
H3534	**R404177**
H3535	**R404176**
H3536	**R40H3536**
H3537	**R40H3537**
H3538	**R40H3538**
H3539	**R40H3539**
H3540	**R40H3540**
H3541	**R40H3541**
H3556	**R404117A**
H3557	**R404116A**
H3572	**R40H3502**
H3573	**R40H3503**
H3580	**291000**
H3580	**291000**
H3580	**291000**
H4018-2	**R40H4072DP**

RAYBESTOS PART #	MERITOR PART #
H4018-2	**R40H4072DP**
H4018-2	**R40H4072DP**
H4019-2	**R40H4019DP**
H4030-2	**R40H4030DP**
H4049-2	**R40H4049DP**
H4074	**R40H4074**
H4074	**R40H4074**
H4079-2	**R40H4090DP**
H4087	**R40H4087**
H4087	**R40H4087**
H4099	**R40H4100DP**
H4100	**R40H4075DP**
H500	**R40H500**
H5004-2	**R40H5004DP**
H5019	**R40H5010**
H5019	**R40H5010**
H5031-2	**R40H5045**
H5031-2	**R40H5045**
H5044	**R40H5083**
H5044	**R40H5083**
H5055	**R40H15039**
H5067	**R40H15068**
H5072	**R40H15087**
H5077	**R40H15088**
H5078	**R40H15086**
H510	**R40H510**
H521	**R40H521**
H5420	**R40H5420**
H5422	**69160441**
H546	**R40H546**
H547	**R40H547**
H5500	**R40H5500**
H5500	**R40H5500**
H5509	**R407991**
H5515	**R40H5545**
H5516	**R40H5516**
H552	**R40H550**
H5524	**R40H5536**
H5524	**R40H5536**
H5524	**R40H5536**
H5524	**R40H5536**
H5529	**60050135**
H5529	**60050135**
H5529	**R40H5529**
H5541	**R40H5601**
H5548	**R40H5808**
H5554-2	**R40H5654**

COMPETITIVE CROSS REFERENCE LISTING

RAYBESTOS PART #	MERITOR PART #
H5581	**R40H5522**
H5581	**R40H5522**
H5582	**60050153**
H5583	**R40H5523**
H5583	**R40H5523**
H5585	**R40H5519**
H5585	**R40H5519**
H5591A	**R40H5719**
H5594-2	**R40H5707**
H5602	**R40H5735**
H5609	**R40H5788**
H5617	**R40H5815**
H5622	**R40H5841**
H5623	**R40H5858**
H5624	**R40H5866**
H5630	**R40H5875**
H5634	**R40H5897**
H5635	**R4011234**
H5645	**R40H5931**
H5647	**R40H5929**
H5648	**R40H5928**
H5649	**R40H5930**
H5676	**R40H5974**
H5677	**R40H5975**
H601	**R40H599**
H602	**R40H596**
H605	**R40H597**
H605	**R40H597**
H612	**R40H595**
H615	**R40H608**
H7041	**R40H7225**
H7041-2	**R40H4030DP**
H7042	**R40H7199**
H7044	**R40H7044**
H7044	**R40H7044**
H7046	**R40H7046**
H7055	**R40H7055**
H7055	**R40H7055**
H7128	**R40H7128**
H7133	**R40H7133**
H7145	**R40H7145**
H7146	**R40H7146**
H7149	**R40H7149**
H7157	**R40H7230**
H7164	**R40H7181**
H7170	**R40H7276**
H7209-2	**R40H7299**

RAYBESTOS PART #	MERITOR PART #
H7267	**R40H7284**
H7276-2	**R40H7324**
H7284	**R407999**
H8200	**R40H8200**
H8202	**R40H8202**
H8204	**R40H8203**
H8205	**R40H5664**
H9200	**R40H9200**
H9201	**R40H9201**
H9201	**R40H9201**
H9204	**R40H9204**
H9206	**R40H9206**
H9207	**R40H9207**
H9210	**R404208**
H9210	**R404208**
H9219	**R40H9219**
H9220	**R40H9220**
H9223	**R40H9223**
H9224	**R40H9224**
H9235	**R40H618**
H9235	**R40H618**
H9235	**R40H618**
H9236	**R404121**
H9237	**R40H9237**
HI5069	**R40H15009**
MC19450	**R4111150**
MC19451	**R4111151**
MC22977	**R4111129**
MC2657	**R4111120**
MC2842	**R4111122**
MC2842	**R4111624**
MC2951	**R4111123**
MC36127	**R4111266**
MC36229	**R4111773**
MC36230	**R4111451**
MC36289	**R4111454**
MC36306	**R4111944**
MC36344	**R4111619**
MC36350	**R4111626**
MC36351	**R4111455**
MC36351	**R4111455**
MC36358	**R4111395**
MC36399	**R4111669**
MC36460	**R4111633**
MC36461	**R4111494**
MC36461	**R4111494**
MC36463	**R4111758**

RAYBESTOS PART #	MERITOR PART #
MC36465	**R4111456**
MC36467	**R4111618**
MC36474	**R4111622**
MC36492	**R4111632**
MC390063	**R4112058**
MC390063	**R4112058**
MC39009	**R4111732**
MC39009	**R4111732**
MC39011	**R4111854**
MC390117	**R4112641**
MC39012	**R4111583**
MC390158	**R4112843**
MC39016	**R4111738**
MC39017	**R4111584**
MC390182	**R4112842**
MC390183	**R4112833**
MC390184	**R4112840**
MC390190	**R4112834**
MC390216	**R4110352**
MC390216	**R4110352**
MC390257	**R4113056**
MC390258	**R4113057**
MC390259	**R4110372**
MC390278	**R4513542**
MC390279	**R4110376**
MC390336	**R4113355**
MC390337	**R4110382**
MC390338	**R4113263**
MC390339	**R4110384**
MC390364	**R4113543**
MC390388	**R4111294**
MC390388	**R4111994**
MC390389	**R4113284**
MC390389	**R4113284**
MC390394	**R4113282**
MC390394	**R4113282**
MC390426	**R4113442**
MC390516	**R4113488**
MC390530	**R4113649**
MC390531	**R4113648**
MC390590	**R4112426**
MC39075	**R4111730**
MC39077	**R4112121**
MC39081	**R4111801**
MC39081	**R4111801**
MC39116	**R4111682**
MC39172	**R4111861**

COMPETITIVE CROSS REFERENCE LISTING

RAYBESTOS PART #	MERITOR PART #
MC39173	**R4111856**
MC39177	**R4111582**
MC39178	**R4111860**
MC39210	**R4111739**
MC39223	**R4111873**
MC39223	**R4112058**
MC39308	**R4111863**
MC39309	**R4111641**
MC39317	**R4111937**
MC39324	**R4111989**
MC39330	**R4111865**
MC39335	**R4111629**
MC39337	**R4111631**
MC39338	**R4111634**
MC39339	**R4111630**
MC39340	**R4111772**
MC39343	**R4110435**
MC39344	**R4111905**
MC39353	**R4111902**
MC39364	**R4111917**
MC39364	**R4111917**
MC39368	**R4111676**
MC39375	**R4111931**
MC39376	**R4111926**
MC39381	**R4111923**
MC39381	**R4111923**
MC39388	**R4111930**
MC39419	**R4111896**
MC39434	**R4111730**
MC39435	**R4111982**
MC39441	**R4111864**
MC39445	**R4112008**
MC39446	**R4112007**
MC39457	**R4111892**
MC39459	**R4111885**
MC39461	**R4111911**
MC39462	**R4111909**
MC39476	**R4111983**
MC39477	**R4111910**
MC39522	**R4111908**
MC39525	**R4112178**
MC39528	**R4111993**
MC39529	**R4111898**
MC39530	**R4111912**
MC39540	**R4112183**
MC39546	**R4112066**
MC39574	**R4111995**

RAYBESTOS PART #	MERITOR PART #
MC39574	**R4111995**
MC39577	**R4111999**
MC39579	**R4111992**
MC39622	**R4111668**
MC39630	**R4112029**
MC39631	**R4111913**
MC39634	**R4112198**
MC39634	**R4112198**
MC39635	**R4112197**
MC39635	**R4112197**
MC39635	**R4112200**
MC39636	**R148228**
MC39636	**R148228**
MC39646	**R4112219**
MC39649	**R4112220**
MC39712	**R4111775**
MC39767	**R4113022**
MC39849	**R4112342**
MC39860	**R4112466**
MC39862	**R4112519**
MC39871	**R4113123**
MC39872	**R4110348**
MC39875	**R4113182**
MC39876	**R4112357**
MC39953	**R4112575**
MC39961	**R4112492**
MC39964	**R4113041**
MC4572	**R4111046**
MC661	**R4111119**
MK1	**R4122964**
MK1025	**R4122436**
MK1108	**R4122643**
MK1141	**R4122494**
MK1197	**R4122489**
MK135	**R4122937**
MK1356	**R4122350**
MK1418	**R4122437**
MK1423	**R4122568**
MK1425	**R4122688**
MK1426	**R4122488**
MK1429	**R4122486**
MK1430	**R4122484**
MK1433	**R4122388**
MK1502	**R4122381**
MK1518	**R4122324**
MK1624	**R4122386**
MK1625	**R4122387**

RAYBESTOS PART #	MERITOR PART #
MK1625	**R4122387**
MK1699	**R4122203**
MK1706	**R4122346**
MK1710	**R4122343**
MK1721	**R4122232**
MK1736	**R4122187**
MK1737	**R4122202**
MK1746	**R4122937**
MK175	**R4122935**
MK1854	**R4122596**
MK1855	**R4122141**
MK1857	**R4110406**
MK1859	**R4122303**
MK1905	**R4122688**
MK196	**R4122934**
MK2062	**R4110409**
MK2065	**R4110410**
MK2895	**R4110411**
MK39	**R4110412**
MK469	**R4122682**
MK473	**R4122681**
MK478	**R4122809**
MK583	**R4122705**
MK772	**R4122505**
MK775	**R4122679**
MK836	**R4122706**
MK872	**R4122597**
MK889	**R4122482**
MK891	**R4122599**
MK899	**R4122598**
RC10183	**R4211254X**
RC10184	**R4211252X**
RC4088	**R4255099**
RWC-4049	**R42R55456**
RWC-4049	**R42R55456**
RWC-4071	**R42R55454**
RWC4072	**R42R55455**
RWC-4215	**R42R55278**
RWC-4216	**R42R55279**
RWC-4217	**R42R55304**
RWC-4218	**R42R55305**
RWC-4245	**R42R55258**
RWC-4246	**R42R55259**
RWC-4255	**R42R55254**
RWC-4255	**R42R55254**
RWC-4256	**R42R55255**
RWC-4256	**R42R55255**

COMPETITIVE CROSS REFERENCE LISTING

RAYBESTOS PART #	MERITOR PART #
RWC-4287	**R42R55520**
RWC-4288	**R42R55521**
RWC-4413	**R42R55496**
RWC-4414	**R42R55497**
RWC-4415	**R42R55498**
RWC-4416	**R42R55499**
RWC-4417	**R42R55500**
RWC-4418	**R42R55501**
RWC-50006	**R42R55616**
RWC-50007	**R42R55617**
RWC-50070	**R42R55590**
RWC-50071	**R42R55591**
RWC-50072	**R42R55630**
RWC-50073	**R42R55631**
RWC-50104	**R42R55636**
RWC-50105	**R42R55637**
RWC-50106	**R42R55460P**
RWC-50107	**R42R55461P**
RWC-50124	**R42R55634**
RWC-50125	**R42R55635**
RWC-5038	**R42R55215**
RWC-5039	**R42R55216**
RWC-5060	**R42R55060**
RWC-5061	**R42R55061**
RWC-5094	**R42R55094**
RWC-5095	**R42R55095**
RWC-5098	**R424235X**
RWC-5098	**R424235X**
RWC-5098	**R4255098**
RWC-5099	**R424236X**
RWC-5099	**R424236X**
RWC-5116	**R42R55116**
RWC-5117	**R42R55117**
RWC-5118	**R42R55118**
RWC-5119	**R42R55119**
RWC-5182	**R42R55413**
RWC-5182	**R42R55413**
RWC-5193	**R42R55193**
RWC-5199	**R42R55199**
RWC-5200	**R42R55200**
RWC-5205	**R42R55205**
RWC-5206	**R42R55206**
RWC-5207	**R42R55207**
RWC-5207	**R42R55207**
RWC-5208	**R42R55208**
RWC-5208	**R42R55208**
RWC-5209	**R42R55209**

RAYBESTOS PART #	MERITOR PART #
RWC-5210	**R42R55210**
RWC-5219	**R42R55264**
RWC-5220	**R42R55265**
RWC-5221	**R42R55381**
RWC-5222	**R42R55382**
RWC-5233	**R42R55233**
RWC-5234	**R42R55234**
RWC-5243	**R42R55243**
RWC-5244	**R42R55244**
RWC-5248	**R42R55248**
RWC-5249	**R42R55249**
RWC-5277	**R42R55506**
RWC-5278	**R42R55507**
RWC-6015	**R42R55460**
RWC-6016	**R42R55461**
RWC-6021	**R42R55518**
RWC-6022	**R42R55519**
RWC-7007	**R42R55411**
RWC-7008	**R42R55412**
RWC-7025	**R42R55604**
RWC-7026	**R42R55605**
RWC7700	**R4255250**
RWC-7700	**R424238X**
RWC-7700	**R424238X**
RWC7800	**60050150**
RWC-7800	**60050150X**
RWC-7800	**60050150X**
RWC-7900	**60050145X**
RWC-7900	**60050145X**
RWC-7900	**60050145X**
RWC9154	**R42R55194**
S11410	**R41301198**
S11410	**R41301198**
S11410	**R41301198**
S33512	**R41302861**
S33512	**R41302861**
S6324	**R44141770**
S6446	**R4148654**
S6858	**R41618406**
SC33721	**R4111206**
SC33722	**R4111208**
SC36164	**R4111768**
SC36169	**R4111320**
SC36170	**R4111466**
SC37723	**R4112120**
SC37724	**R4112055**
SC37725	**R4112054**

RAYBESTOS PART #	MERITOR PART #
SC37728	**R4112166**
SC37745	**R4112052**
SC37791	**R4112168**
SC37793	**R4111959**
SC37793	**R4111959**
SC37823	**R4111916**
SC37824	**R4111915**
WC 37729	**201184**
WC 37762	**201179**
WC 37762	**201179**
WC 37763	**201180**
WC 37763	**201180**
WC 37763	**201180**
WC13368	**R4133540**
WC13369	**R4133541**
WC13388	**R4133726**
WC17507	**R4133627**
WC17508	**R4133628**
WC17509	**R4133230**
WC17509	**R4133230**
WC17510	**R4133231**
WC17510	**R4133231**
WC19090	**R4133406**
WC19091	**R4133407**
WC19109	**R4133335**
WC19109	**R4133335**
WC19111	**R4133420**
WC19746	**R4133336**
WC24489	**R4133338**
WC26172	**R4133400**
WC28661	**R4133390**
WC28850	**R4133256**
WC28851	**R4133257**
WC36017	**R4133614**
WC36018	**R4133615**
WC36043	**R4133366**
WC36044	**R4133367**
WC36057	**R4133206**
WC36057	**R4133206**
WC36057	**R4133206**
WC36057	**R4133206**
WC36058	**R4133207**
WC36076	**R4133278**
WC36077	**R4133279**
WC36077	**R4133279**
WC370042	**R4134139**
WC370043	**R4134140**

COMPETITIVE CROSS REFERENCE LISTING

RAYBESTOS PART #	MERITOR PART #
WC37024	**R4133447**
WC37033	**R4133714**
WC37033	**R4133714**
WC37034	**R4133715**
WC37034	**R4133715**
WC37048	**R4133469**
WC37080	**R4133608**
WC37091	**R4133376**
WC37092	**R4133377**
WC37118	**R4133484**
WC37119	**R4133485**
WC37132	**R4133725**
WC37149	**R4033607**
WC37152	**R4133606**
WC37167	**R4133581**
WC37167	**R4133581**
WC37168	**R4133582**
WC37180	**R4133580**
WC37218	**R4133791**
WC37219	**R418145**
WC37222	**R4133584**
WC37227	**R4133718**
WC37228	**R4133719**
WC37235	**R4133597**
WC37235	**R4133597**
WC37235	**R4133597**
WC37240	**R4133655**
WC37241	**R4133656**
WC37248	**R4133379**
WC37249	**R4133380**
WC37250	**R4133945**
WC37251	**R4133946**
WC37252	**R4133717**
WC37253	**R4133716**
WC37254	**R4133722**
WC37255	**R4133723**
WC37256	**R4133720**
WC37257	**R4133721**
WC37262	**R4133596**
WC37263	**R4133595**
WC37267	**R4133637**
WC37268	**R4133638**
WC37290	**R4133709**
WC37317	**R4133312**
WC37317	**R4133312**
WC37337	**R4133708**
WC37400	**R4133858**

RAYBESTOS PART #	MERITOR PART #
WC37400	**R4133858**
WC37517	**R4133891**
WC37537	**R4133792**
WC37538	**R418162**
WC37540	**R4133892**
WC37574	**R4133851**
WC37593	**R4133915**
WC37594	**R4133916**
WC37640	**R4133904**
WC37643	**R4133893**
WC37663	**R4133930**
WC37730	**201183**
WC37731	**201186**
WC37732	**201185**
WC37760	**R4133905**
WC37761	**R4133906**
WC37764	**201181**
WC37764	**201181**
WC37765	**201182**
WC37765	**201182**
WC37779	**R4133958**
WC37779	**R4133958**
WC37781	**R4134037**
WC37781	**R4134037**
WC37784	**R4133962**
WC37785	**R4133961**
WC37854	**R4134075**
WC37855	**R4134054**
WC37855	**R4134064**
WC37856	**R4134028**
WC37863	**R4134076**
WC37873	**R417375**
WC37874	**R417381**
WC37878	**R417379**
WC37879	**R417401**
WC37880	**R417398**
WC37881	**R417397**
WC37882	**R417416**
WC37883	**R417415**
WC37884	**R417423**
WC37885	**R417421**
WC37886	**R417422**
WC37887	**R417420**
WC37938	**R4111282**
WC37940	**R4111283**
WC37941	**R4111284**
WC37942	**R4111285**

RAYBESTOS PART #	MERITOR PART #
WC37943	**R4111286**
WC37967	**R4134082**
WC37967	**R4134082**
WC37985	**R4134102**
WC4419	**R4133396**
WC4419	**R4133396**
WC7563	**R4133002**
WC7564	**R4133003**
WC8806	**R4133315**
WC8807	**R4133316**
WC8852	**R4133320**
WC8853	**R4133321**
WC9025	**R4133004**
WC9026	**R4133005**
WK 1908	**SP7880S**
WK1077	**R4166599**
WK1148	**60050136**
WK1148	**60050136**
WK129	**R4166820**
WK13	**R4166852**
WK1314	**R4066557**
WK1372	**R4066851**
WK1455	**R4166550**
WK1455	**R4166550**
WK1455	**R4166550**
WK1473	**R4066544**
WK149	**R4166926**
WK149	**R4166926**
WK152	**R4166923**
WK15306	**R4133136**
WK1565	**R4066530**
WK1579	**R4066517**
WK1667	**R402235118**
WK1667	**R402235118**
WK1667	**R402235118**
WK1667	**R402235118**
WK1671	**R4166510**
WK1680	**60050146**
WK1681	**60050266**
WK1708	**R406532**
WK1708	**R406532**
WK1708	**R4066365**
WK1708	**R4066365**
WK173	**R4166917**
WK174	**R4166689**
WK174	**R4166689**
WK1755	**R4166307**

COMPETITIVE CROSS REFERENCE LISTING

RAYBESTOS PART #	MERITOR PART #
WK176	**R4166897**
WK178	**R415181**
WK178	**R415181**
WK178	**R415181**
WK178	**R415181**
WK178	**R415181**
WK1838	**R4066395**
WK1853	**R4166448**
WK195	**R415194**
WK1951	**R4166298**
WK1952	**R4166297**
WK1966	**R4066204**
WK1973	**R4066305**
WK20	**R4166821**
WK2005	**R4066306**
WK2033	**R4066211**
WK21	**R4166822**
WK2110	**R4066330**
WK2131	**R4166262**
WK264	**R4166935**
WK2777	**R4066209**
WK35	**R4166819**
WK35	**R4166819**
WK36	**R418187**
WK422	**R4166882**
WK423	**R4166852**
WK423	**R4166852**
WK442	**R4166872**
WK471	**R418188**
WK491	**R4066587**
WK524	**R4066848**
WK535	**R415193**
WK629	**R4166620**
WK698	**R4066778**
WK705	**R4066781**
WK7933	**R4066715**
WK806	**R4066780**
WK806	**R4066780**
WK886	**R4166684**

WAGNER #	MERITOR PART #
59160	**R40H3503**
14781901	**R4212490**
14781902	**R4212491**
ANA169R	**R41581**
ANA263R	**R41582**
ANA299R	**R46299**
ANA357AR	**R46357**
ANA358AR	**R46358**
ANA445R	**R46445**
ANA446R	**R46446**
ANA451R	**R46451**
ANA452R	**R46452**
ANA462R	**R46462**
ANA473R	**R46473**
ANA474R	**R41569**
ANA538R	**R46538**
ANA583R	**R468140**
BD102074	**R44141219**
BD102075	**R44141261**
BD102137	**R44141397**
BD102138	**R44141414**
BD125051	**R44140604**
BD125052	**R44140600**
BD125085	**23122700002**
BD125086	**23122743002**
BD125086	**23122743002**
BD125087	**23122703002**
BD125088	**23122687002**
BD125089	**23123046002**
BD125090	**23122729002**
BD125096	**23122527002**
BD125097	**23122897002**
BD125098	**23122701002**
BD125115	**23123041002**
BD125160	**R44141599**
BD125160	**R44141599**
BD125160	**R44141599**
BD125167	**R44141866**
BD125169	**R44141741**
BD125201	**R44140264**
BD125201	**R44140542**
BD125206	**R44141829**
BD125207	**R44140622**
BD125208	**R44141806**
BD125212	**R44141818**
BD125214	**23122691002**
BD125224	**R44141798**

WAGNER #	MERITOR PART #
BD125244	**23122920002**
BD125245	**R44140387**
BD125246	**R44140619**
BD125324	**R44141730**
BD125331	**R44141861**
BD125339	**23123296002**
BD125346	**R4411260**
BD125357	**R44141583**
BD125358	**23122688002**
BD125361	**23-123573-004**
BD125362	**23-123572-004**
BD125379	**R44141862**
BD125395	**R44140657**
BD125395	**R44140657**
BD125399	**R44141927**
BD125404	**R44141906**
BD125407	**R44140682**
BD125410	**R44141934**
BD125411	**R44141917**
BD125445	**R44141924**
BD125468	**R44145049**
BD125474	**R44145055**
BD125477	**R44145057**
BD125478	**R4411316**
BD125497	**R44145068**
BD125500	**R44140675**
BD125529	**R44145145**
BD125530	**R44145139**
BD125550	**R44145162**
BD125552	**R44145054**
BD125592	**R44145107**
BD125630	**R44145071**
BD125649	**R44145325**
BD125714	**R4466924**
BD125715	**R44145274**
BD60187	**R44140365**
BD60258	**R44141043**
BD60296	**R44140253**
BD60302	**R44140267**
BD60330	**R44140278**
BD60340	**R44140312**
BD60341	**R44140315**
BD60343	**R44140316**
BD60351	**R44140479**
BD60356	**R44140388**
BD60357	**R44140387**
BD60359	**R44140363**

COMPETITIVE CROSS REFERENCE LISTING

WAGNER #	MERITOR PART #
BD60393	**R44140397**
BD60394	**R44141237**
BD60397	**R44140386**
BD60402	**R44141186**
BD60413	**R44141088**
BD60427	**R44141049**
BD60428	**R44141067**
BD60434	**R44141089**
BD60451	**R44141152**
BD60465	**R44140344**
BD60466	**R44140362**
BD60468	**R44141127**
BD60469	**R44141154**
BD60470	**R44141153**
BD60501	**R44141179**
BD60530	**R44141174**
BD60532	**R44141197**
BD60541	**R44141235**
BD60542	**R44141234**
BD60583	**R44140401**
BD60584	**R44141251**
BD60593	**R44141483**
BD60595	**R44140408**
BD60597	**R44141468**
BD60610	**R44141664**
BD60617	**R44141193**
BD60622	**R44141469**
BD60623	**R44140409**
BD60625	**R44140510**
BD60627	**R44141233**
BD60724	**R44140450**
BD60727	**R44140449**
BD60729	**R44141391**
BD60731	**R44141382**
BD60732	**R441404090**
BD60784	**R44141381**
BD60793	**R44140493**
BD60818	**R44140468**
BD60818	**R44140468**
BD60819	**R44140504**
BD60868	**R44140520**
BD60875	**R44141389**
BD60880	**R44140547**
BD60883	**R44140496**
BD60885	**R44140545**
BD60889	**R44141481**
BD61808	**R44141480**
BD61809	**R44141454**
BD61812	**R44141453**
BD61813	**R44141482**
BD61814	**R44141540**
BD61815	**R44141488**
BD61817	**R44140543**
BD61819	**R44141457**
BD61823	**R44140540**
BD61832	**R44140541**
BD61833	**R44141455**
BD61846	**R44141508**
BD61880	**R44141630**
BD61891	**R44140536**
BD61910	**R44141487**
BD61915	**R44141663**
BD61918	**R44141477**
CM250042	**R4113118**
CM350038	**R4113315**
CM350080	**R4113318**
CM350134	**R4113508**
CM350135	**R4113509**
CM350172	**R4113511**
CM360058	**R4113207**
CM360071	**R4113505**
CM360107	**R4113513**
CM360108	**R4113514**
CM360108	**R4113514**
CM360109	**R4113515**
CM36027	**R4113347**
CR102425	**R42R55233**
CR102428	**R42R55234**
CR102430	**R42R55412**
CR102431	**R42R55411**
CR102432	**R42R55244**
CR102433	**R42R55243**
CR104396	**R42R55119**
CR104397	**R42R55118**
CR105668	**R42R55456**
CR105668	**R42R55456**
CR105669	**R42R55413**
CR105669	**R42R55413**
CR107084	**R42R55305**
CR107085	**R42R55304**
CR108723	**60050145X**
CR108723	**60050145X**
CR108723	**60050145X**
CR110413RM	**R42R55249**
CR110414	**R42R55248**
CR110447	**R42R55279**
CR110448	**R42R55278**
CR112057	**R424237AX**
CR112480	**R42R55259**
CR112481	**R42R55258**
CR112482	**R42R55255**
CR112483	**R42R55254**
CR116290	**R42R55499**
CR116291	**R42R55498**
CR116292	**R42R55501**
CR116293	**R42R55500**
CR116294	**R42R55497**
CR116295	**R42R55496**
CR116344	**R42R55519**
CR116345	**R42R55518**
CR116742	**R42R55605**
CR116743	**R42R55604**
CR116931	**R42R55461**
CR116932	**R42R55460**
CR119052	**R42R55507**
CR119053	**R42R55506**
CR119332	**R42R55521**
CR119333	**R42R55520**
CR120313	**60050150X**
CR120313	**60050150X**
CR120549	**R424238X**
CR120549	**R424238X**
CR123141	**R42R55617**
CR123142	**R42R55616**
CR123606	**R42R55631**
CR123607	**R42R55630**
CR123608	**R42R55591**
CR123609	**R42R55590**
CR124108	**R42R55635**
CR124109	**R42R55634**
CR128780P	**R42R55637**
CR128781P	**R42R55636**
CR128856	**R42R55461P**
CR128857	**R42R55460P**
CR130210	**R424236X**
CR130210	**R424236X**
CR130211	**R424235X**
CR130211	**R424235X**
CR76050	**R42R55216**
CR76051	**R42R55215**
CR76816	**R42R55061**

COMPETITIVE CROSS REFERENCE LISTING

WAGNER #	MERITOR PART #
CR76817	**R42R55060**
CR76818	**R42R55095**
CR76819	**R42R55094**
CR83262	**R42R55117**
CR83263	**R42R55116**
CR83308	**R42R55455**
CR83309	**R42R55454**
CR98670	**R42R55194**
CR98671	**R42R55193**
CR98884	**R42R55208**
CR98884	**R42R55208**
CR98885	**R42R55207**
CR98885	**R42R55207**
CR98886	**R42R55206**
CR98887	**R42R55205**
CR98888	**R42R55265**
CR98889	**R42R55264**
CR98906	**R42R55200**
CR98907	**R42R55199**
CR98954	**R42R55382**
CR98955	**R42R55381**
CR99022	**R42R55210**
CR99023	**R42R55209**
F100325	**R4111768**
F100558	**R4111456**
F100559	**R4111451**
F100560	**R4111773**
F100771	**R4577167**
F100986	**R4111801**
F101253	**R4111738**
F101254	**R4111944**
F101262	**R4111739**
F101263	**R4122494**
F101266	**R4111730**
F101267	**R4111732**
F101268	**R4112121**
F101491	**R4066587**
F101673	**R4166599**
F101928	**R4122388**
F102130	**R4577481**
F102130	**R4577481**
F102204	**R4577373**
F102325	**R4111885**
F102336	**R4511240**
F102420	**R4111861**
F102421	**R4111856**
F102464	**R4577321**

WAGNER #	MERITOR PART #
F102465	**R4577187**
F102465	**R4577187**
F102466	**R4577320**
F102467	**R4577421**
F102474	**R4577078**
F102474	**R4577078**
F102478	**R4588472**
F102553	**R40H5545**
F102597	**R4577252**
F103200	**R4577249**
F103201	**R4577248**
F103202	**R4577245**
F103202	**R4577245**
F103223	**R4133915**
F103224	**R4133916**
F103238	**R4111641**
F103239	**R4111668**
F103254	**R4111911**
F103255	**R4122387**
F103255	**R4122387**
F103301	**R4577309**
F103301	**R4577309**
F103302	**R4577235**
F103304	**R4577273**
F103307	**R4577452**
F103308	**R4577454**
F103311	**R4577453**
F103312	**R4577455**
F103314	**R4577457**
F103460	**R4111959**
F103471	**R4112166**
F103473	**R4112055**
F103474	**R4112054**
F103476	**R4112052**
F103483	**R4112168**
F103485	**R4112120**
F103538	**R4122211**
F103539	**R4122319**
F103540	**R4122210**
F103542	**R4122160**
F104341	**R4577329**
F104342	**R4577330**
F104345	**R4577295**
F104345	**R4577295**
F104346	**R4577297**
F104347	**R4577296**
F104352	**R4577379**

WAGNER #	MERITOR PART #
F104352	**R4577379**
F104353	**R4577380**
F104456	**R4111863**
F104459	**R4122202**
F104464	**R4111989**
F104467	**R4122232**
F104514	**R4111865**
F104516	**R4112058**
F104545	**R4111864**
F104631	**R40H7230**
F105252	**R4111937**
F105263	**R4111917**
F105676	**R4166550**
F105798	**R4111902**
F105801	**R4111905**
F105802	**R4122350**
F105833	**R4122346**
F105837	**R4122381**
F105838	**R4122437**
F105841	**R40H5601**
F105852	**R40H4030DP**
F105876	**R4111896**
F10602	**R404132**
F106315	**R4133597**
F106328	**R4577316**
F106329	**R4577317**
F106330	**R4577314**
F106331	**R4577441**
F106342	**R4577185**
F106347	**R4577315**
F106348	**R4577327**
F106349	**R4577328**
F106351	**R4122809**
F106353	**R4122872**
F106354	**R4122882**
F106357	**R4577299**
F106358	**R4577300**
F106359	**R4577298**
F106366	**R4577247**
F106366	**R4577247**
F106367	**R4577311**
F106374	**R4577366**
F106380	**R4066544**
F106387	**R4066530**
F106431	**R4111931**
F106432	**R4122324**
F106433	**R4111930**

COMPETITIVE CROSS REFERENCE LISTING

WAGNER #	MERITOR PART #
F106467	**R4122908**
F106473	**R4122682**
F106492	**R4133851**
F106625	**R4577172**
F106646	**R4577484**
F106648	**R4577460**
F106669	**R4577169**
F106669	**R4577169**
F106922	**R4133792**
F106923	**R418162**
F107050	**R4111926**
F107197	**R40H608**
F107255	**R4577312**
F107272	**R4577427**
F107273	**R4577428**
F107274	**R4577419**
F107281	**R4577564**
F107284	**R4577415**
F107285	**R4577416**
F107300	**R4577440**
F107533	**R4090020S**
F107734	**R4588561**
F107747	**R4111923**
F108042	**R4112073**
F108043	**R4122305**
F108120	**R4122386**
F108145	**R4111982**
F108148	**R4111730**
F108158	**R4090070**
F108158	**R4090070**
F108158	**R4090070P**
F108159	**R4090063P**
F108159	**R4090063S**
F108168	**R4111983**
F108211	**R4111957**
F108212	**R4122318**
F108217	**R406532**
F108217	**R406532**
F108241	**R4066517**
F108245	**69270757**
F108817	**SP7895S**
F108818	**SP7873S**
F108819	**69270702**
F108820	**60050146**
F108900	**R402238231**
F109168	**R4090074P**
F109532	**R4133858**

WAGNER #	MERITOR PART #
F110117	**R4112169**
F110118	**R4122205**
F110130	**R4577870**
F110130	**R4577870**
F110131	**R4577378**
F110134	**R4577364**
F110158	**R4577418**
F110159	**R4577417**
F110260	**R4133891**
F110261	**R4133892**
F110262	**R4166510**
F110263	**R4133893**
F110267	**R4112098**
F110269	**R4112118**
F110270	**R4112119**
F110273	**R4112176**
F110274	**R4122204**
F110403	**60050266**
F110420	**R4577340**
F110424	**R4577320**
F110425	**R4577421**
F110426	**R4577429**
F110427	**R4577430**
F110710	**R4112117**
F110873(L&R)	**R4133904**
F110886	**R4112178**
F110888	**R4112029**
F110889	**R4122187**
F110917	**R4112007**
F110919	**R4112008**
F110937	**R40H2622**
F110938	**R40H2623**
F110980	**R4111995**
F110980	**R4111995**
F111134	**R4577443**
F111134	**R4577443**
F111135	**R4577444**
F111135	**R4577444**
F111137	**R4577503**
F111141	**R4577558**
F111231	**R40H5045**
F111231	**R40H5045**
F111396	**R4577565**
F111397	**R4577559**
F111398	**R4577560**
F111820	**R40H7284**
F111945	**R4577461**

WAGNER #	MERITOR PART #
F111945	**R4577461**
F111946	**R4577463**
F111949	**R4577596**
F111950	**R4577597**
F112090	**R40H5522**
F112090	**R40H5522**
F112091	**60050153**
F112096	**R40H618**
F112097	**291000**
F112246	**R4122303**
F112409	**R4133930**
F112461	**R402235118**
F112593	**R4112183**
F112775	**R4577799**
F112957	**R40H4100DP**
F11303	**R4166820**
F11304	**R4166926**
F113148	**R4588651**
F113296	**R4577333**
F113343	**R40H7276**
F11336	**R4166923**
F113377	**R4577614**
F113378	**R4577612**
F113379	**R4577613**
F113704	**R4134064**
F113751	**R4111294**
F113751	**R4111994**
F113757	**R4133945**
F113758	**R4133946**
F113857	**R40H5719**
F113877	**R4577171**
F113927	**R4578083**
F113928	**R4578084**
F113980	**R4578085**
F114079	**R148228**
F114079	**R4112197**
F11410	**R41301198**
F114401	**R4066395**
F114476	**R40H5654**
F114477	**60050135**
F116224	**R4133961**
F116225	**R4166297**
F116226	**R4166298**
F116263	**R4133962**
F116321	**R4066305**
F116322	**R4066306**
F116323	**R4066330**

COMPETITIVE CROSS REFERENCE LISTING

WAGNER #	MERITOR PART #
F116324	**R4090085S**
F116325	**R4090087S**
F116326	**R4090101S**
F116359	**R4134037**
F116367	**R4133958**
F116370	**R4166307**
F116446	**R4122204**
F116472	**R4578072**
F116473	**R4578071**
F116627	**R4112220**
F116628	**R4122141**
F116680	**R4577676**
F116702	**R4111993**
F116846	**R4577760**
F116847	**R4577761**
F116848	**R4577766**
F116849	**R4577767**
F116850	**R4578224**
F116851	**R4578787**
F116881	**R4112219**
F117014	**R40H595**
F117014	**R40H9220**
F117027	**R40H597**
F117027	**R40H9200**
F117127	**R40H7225**
F117152	**R40H596**
F117217	**R40H7299**
F117225	**R40H5707**
F117226	**R40H7324**
F118083	**R4577768**
F118084	**R4577769**
F118100	**201179**
F118101	**201180**
F118104	**201183**
F118105	**201184**
F118110	**201181**
F118111	**201182**
F118117	**R4577765**
F118117	**R4577765**
F118118	**R4577857**
F118172	**R4577787**
F118173	**R4577788**
F119395	**R4111908**
F119396	**R4111912**
F119397	**R4111910**
F119398	**R4111992**
F119399	**R4111892**
F119400	**R4111999**
F119401	**R4111909**
F119402	**R4111898**
F119434	**R4090088S**
F119435	**R4066204**
F120368	**R4112200**
F120368	**R4112833**
F120369	**R4112198**
F120520	**R4577810**
F120521	**R4577921**
F120536	**R4578165**
F120590	**R4110376**
F120590	**R4113022**
F120598	**R4112492**
F120599	**R4112058**
F120859	**R4578159**
F12086	**R40H1807**
F120860	**R451554**
F120872	**R4578618**
F122222	**R4134082**
F122226	**R4113123**
F122227	**R4110409**
F122230	**R4113182**
F122406	**R4134028**
F122573	**R4110352**
F122576	**R4112575**
F122909	**R4166262**
F123199	**R4134075**
F123262	**R4111282**
F123264	**R4111284**
F123265	**R4111286**
F123266	**R4111283**
F123267	**R4111285**
F123284	**R4577845**
F123290	**R4578016**
F123291	**R4578068**
F123294	**R4577841**
F123296	**R4577914**
F123297	**R4577915**
F123301	**R4577901**
F123302	**R4577900**
F123303	**R4578360**
F123304	**R4578548**
F123305	**R4578226**
F123306	**R451534**
F123524	**R4112519**
F123791	**R4578267**
F123794	**R4577868**
F124052	**R4577686**
F124053	**R45F124053**
F124054	**R4577495**
F124110	**R4111320**
F124111	**R4111206**
F124112	**R4111208**
F124483	**R40H2643**
F124484	**R40H2644**
F124501	**R40H5735**
F124595	**R451537**
F124596	**R4577544**
F124599	**R4577851**
F124600	**R4578227**
F124601	**R4578437**
F124718	**R4577826**
F124718	**R4577826**
F124719	**R4577909**
F124726	**R4578169**
F124727	**R4578001**
F124728	**R4578303**
F124756	**R4578118**
F124757	**R4578117**
F124997	**R4510645**
F126896	**R40H2638**
F128098	**R4112342**
F128443	**R4110348**
F128671	**R4577245**
F128682	**R4578610**
F128683	**R4578166**
F128892	**R40H3511**
F128923	**69160441**
F128951	**R4510651**
F128952	**R4510652**
F128953	**R4510650**
F129285	**R4112641**
F129443	**R4134054**
F130426	**R4578183**
F130429	**R4577277**
F130430	**R4578188**
F130431	**R4578184**
F130432	**R4578182**
F131211	**R4112842**
F131212	**R4112843**
F131225	**R4134102**
F131306	**R4112840**
F131468	**R4110372**

COMPETITIVE CROSS REFERENCE LISTING

WAGNER #	MERITOR PART #
F131471	**R4113057**
F131472	**R4113056**
F132033	**R4578137**
F132034	**R4578136**
F132146	**R4578387**
F132148	**R4578132**
F132149	**R4578133**
F132160	**R4578130**
F132161	**R4578135**
F132195	**R4578208**
F132196	**R4578210**
F132230	**R4577927**
F132295	**R4578145**
F132296	**R4578144**
F132298	**R4578187**
F132318	**R4578206**
F132320	**R4578218**
F132349	**R4577928**
F132413	**R4578219**
F132752	**R4578327**
F132753	**R4578326**
F132754	**R4578333**
F132762	**R4578312**
F132763	**R4578313**
F132770	**R4578324**
F132771	**R4578325**
F132772	**R4578332**
F132773	**R4578331**
F132773	**R4578332**
F132988	**R4578557**
F13368	**R4133540**
F13369	**R4133541**
F133813	**R4578209**
F133837	**R4578305**
F133851	**R4578259**
F133852	**R4578258**
F13620	**R418187**
F139932	**R4578898**
F139933	**R4512407**
F139934	**R4512408**
F139948	**R4512409**
F139949	**R4512410**
F139950	**R4512411**
F139951	**R4512412**
F139959	**R4113543**
F17507	**R4133627**
F17508	**R4133628**

WAGNER #	MERITOR PART #
F17814	**R40H1456**
F18789	**R40F18789**
F18984	**R4133791**
F18985	**R418145**
F19109	**R4133335**
F19109	**R4133335**
F19111	**R4133420**
F19146	**R40H1869**
F19293	**R40H1808**
F19309	**R40H8200**
F19341	**R4166917**
F19349	**R4166689**
F19350	**R415181**
F19350	**R4166897**
F19381	**R415194**
F19386	**R4166819**
F19408	**R40H9201**
F19436	**R4111129**
F19450	**R4111150**
F19451	**R4111151**
F19471	**R40H4030DP**
F19472	**R40H4049DP**
F19746	**R4133336**
F199931	**R4578899**
F21211	**R40H1909**
F23880	**R4023969**
F24489	**R4133338**
F26048	**R40H1902**
F26049	**R40H1903**
F26052	**R40H1900**
F26053	**R40H1901**
F26104	**R4122893**
F26115	**R415193**
F26159	**R4133580**
F26172	**R4133400**
F26181	**R4133584**
F2842	**R4111122**
F28661	**R4133390**
F28850	**R4133256**
F28851	**R4133257**
F2951	**R4111123**
F32349	**R4133376**
F32350	**R4133377**
F32357	**R4133379**
F32358	**R4133380**
F33130	**R4122915**
F33149	**R418188**

WAGNER #	MERITOR PART #
F33512	**R41302861**
F34072	**R4133366**
F34073	**R4133367**
F34173	**R4111191**
F34401	**R4133406**
F34402	**R4133407**
F35325	**R4133206**
F35326	**R4133207**
F35417	**R4111318**
F3600	**R4166822**
F3608	**R4166852**
F3609	**R4166821**
F36094	**R4166935**
F3613	**R4122964**
F3622	**R4122937**
F36403	**R40H111**
F36445	**R40H521**
F36449	**R40H140**
F36454	**R40H102**
F36460	**R40H133**
F36466	**R40H370**
F36466	**R40H370**
F36481	**R40H366**
F36764	**R4111161**
F37782	**R4133278**
F37783	**R4133279**
F37783	**R4133279**
F39083	**R4122697**
F3909	**R40H3524**
F39148	**R4122915S**
F40951	**R4133614**
F40952	**R4133615**
F41	**R4112066**
F42082	**R4111468**
F42194	**R4111266**
F43260	**R4111466**
F43375	**R4133714**
F43376	**R4133715**
F43383	**R4133581**
F43384	**R4133582**
F4572	**R4111046**
F45873	**R4133447**
F45923	**R40H510**
F45927	**R40H369**
F45941	**R40H367**
F46348	**R4166852**
F46349	**R4166872**

COMPETITIVE CROSS REFERENCE LISTING

WAGNER #	MERITOR PART #
F46351	**R4122568**
F46352	**R4122937**
F46386	**R4122770**
F5035	**R45616973**
F51081	**R4133469**
F51088	**R4133608**
F54695	**R4111455**
F54699	**R4111467**
F55890	**R4133484**
F55891	**R4133485**
F56789	**R4111455**
F57146	**R4133725**
F57147	**R4133726**
F57505	**R40H1917**
F57506	**R40H1916**
F57597	**R4111454**
F5795	**R45616972**
F59000	**R4122681**
F59013	**R4122679**
F59054	**R40H4087**
F59100	**R40H378**
F59157	**R40H3540**
F59158	**R40H3541**
F59159	**R40H3502**
F59176	**R4066848**
F59177	**R4066851**
F59240	**R4133230**
F59241	**R4133231**
F59302	**R40H1860**
F59303	**R40H1861**
F59339	**R40H1868**
F59351	**R40H1805**
F59531	**R40H1865**
F59532	**R40H1864**
F602	**R4533757**
F6446	**R4148654**
F6477	**R40H1177**
F661	**R4111119**
F67412	**R40H4019DP**
F67455	**R40H546**
F6858	**R41618406**
F71237	**R4033607**
F71238	**R4133606**
F71305	**R4577479**
F71344	**R4577147**
F71602	**R4122688**
F71603	**R4122688**

WAGNER #	MERITOR PART #
F71664	**R4122706**
F71668	**R4166620**
F71689	**R4122486**
F71690	**R4122484**
F71691	**R4122488**
F71940	**R4133718**
F71941	**R4133719**
F72537	**R40H330**
F73106	**R40H364**
F73143	**R40H599**
F73207	**R40H547**
F73231	**R40H357**
F73247	**R4511250**
F73355	**R4111395**
F73399	**R40H9237**
F73500	**R4133716**
F73501	**R4133717**
F73537	**R4133722**
F73538	**R4133723**
F73543	**R4133720**
F73544	**R4133721**
F73614	**R4133596**
F73615	**R4133595**
F73620	**R4133637**
F73621	**R4133638**
F73674	**R40H5500**
F73674	**R40H5500**
F73682	**R407991**
F746	**R4133312**
F74891	**R4111619**
F75775	**R40H1875**
F75779	**R40H1879**
F75994	**R4111629**
F75995	**R4111631**
F75996	**R4111634**
F75997	**R4111630**
F75998	**R4111772**
F76008	**R4090013S**
F76019	**R4090015S**
F76021	**R4090018P**
F76021	**R4090018S**
F76024	**R4090019S**
F76024	**R4090019S**
F76027	**R4090020S**
F76028	**R4090021**
F76028	**R4090021**
F76033	**R4090028S**

WAGNER #	MERITOR PART #
F76074	**R40H5004DP**
F76090	**R4066781**
F76151	**R4111626**
F76154	**R4111624**
F76178	**R40H5516**
F77034	**R4111618**
F77763	**R4111632**
F77764	**R4111622**
F78079	**R4577537**
F78092	**R4588519**
F78540	**R40H7128**
F78544	**R40H7133**
F78731	**R4122343**
F78744	**R4133655**
F78745	**R4133656**
F78974	**R4133004**
F78975	**R4133005**
F79347	**R4588558**
F79359	**R4588564**
F79767	**R4133709**
F79768	**R4133708**
F79781	**R4111494**
F79781	**R4111494**
F80018	**R4577240**
F80018	**R4577240**
F80020	**R4577010**
F80569	**R4122705**
F80967	**R4588651**
F80976	**R4577083**
F80977	**R4577080**
F83297	**R4066780**
F83691	**R4066778**
F84051	**R4122599**
F84052	**R4111582**
F84058	**R4111583**
F84059	**R4122598**
F8449	**R4122935**
F84529	**R4577024**
F8456	**R4122934**
F86408	**R40H550**
F86444	**R4133905**
F86445	**R4133906**
F86511	**R4122597**
F86560	**R4577019**
F86626	**R4122596**
F87354	**R40H7149**
F8806	**R4133315**

COMPETITIVE CROSS REFERENCE LISTING

WAGNER #	MERITOR PART #
F8807	**R4133316**
F8852	**R4133320**
F8853	**R4133321**
F88652	**60050136**
F88754	**R40H7199**
F88783	**R4111633**
F88856	**R4111913**
F88950	**R4577548**
F88958	**R4577241**
F9336	**R4133002**
F9337	**R4133003**
F97612	**R4122505**
F97660	**R4577631**
F97661	**R4577024**
F97864	**R4166448**
F97924	**R4111669**
F97934	**R4111854**
F97936	**R4111676**
F97938	**R4111682**
F98059	**R4122436**
F98103	**R4122342**
F98300	**R40H130**
F98316	**R40H500**
F98357	**R40H2527**
F98358	**R40H2528**
F98359	**R40H2529**
F98364	**R40H2534**
F98365	**R40H2535**
F98374	**R40H2544**
F98375	**R40H2545**
F98404	**R40H2586**
F98404	**R40H2586**
F98405	**R40H2587**
F98405	**R40H2587**
F98406	**R40H2588**
F98407	**R40H2589**
F98414	**R40H2596**
F98415	**R40H2597**
F98416	**R40H2598**
F98417	**R40H2599**
F98422	**R40H4072DP**
F98423	**R40H4074**
F98423	**R40H4074**
F98424	**R40H4075DP**
F98454	**R40H7044**
F98455	**R40H7046**
F98457	**R40H7055**

WAGNER #	MERITOR PART #
F98457S	**R40H7055**
F98663	**R4111916**
F98664	**R4111915**
F98895	**R4111860**
F98896	**R4111775**
F98918	**R4577334**
F98919	**R4577335**
F98931	**R4577173**
F98937	**R4577387**
F98938	**R4577388**
F98946	**R4577189**
F98950	**R4122489**
F98953	**R4111584**
F98956	**R4066557**
F98957	**R4090068S**
F98974	**R40H4090DP**
F99024	**R4066715**
F99032	**R4122482**
F99104	**R4166684**
F99299	**R4111758**
F99333	**R40H5536**
F99980	**R4090029**
FC004395	**R40FC004395**
FD70310	**R700346**
FD70311	**R700381**
FD70312	**R700383**
FE31993	**R700235**
FE32479	**R700463**
FE57763	**R700321**
FE59210	**R464004**
MX7224	**MVD326**
MX728A	**MVD52**
MX7425	**MVD675**
PX7054R	**MVD120**
PX7054R	**MVD120**
PX7179R	**MVD269**
R104516	**R4111873**
R134735	**R4113607**
R134792	**R4113648**
SX7013A	**MD50**
SX7054	**MD120**
SX7054	**MD120**
SX7081A	**MD149**
SX7081A	**MD149**
SX7136	**MD215**
SX7141	**MD224**
SX7141	**MD224**

WAGNER #	MERITOR PART #
SX7141	**MD224**
SX7142	**MD225**
SX7142	**MD225**
SX7142	**MD225**
SX7149	**MD236**
SX7179	**MD269**
SX7259	**MD368**
SX7259A	**MD369**
SX7260	**MD370**
SX7264	**MD375**
SX728A	**MD52**
SX7299	**MD411**

OEM CROSS REFERENCE LISTING

CHRYSLER PART NUMBER	MERITOR PART	DESCRIPTION
431333	**R4133206**	WHEEL CYLINDER
2830784	**R4588472**	HYDRAULIC HOSE
2881676	**R40H133**	SPRING KIT
2908734	**R4133715**	WHEEL CYLINDER
2908735	**R4133714**	WHEEL CYLINDER
2909476	**R4133715**	WHEEL CYLINDER
2954606	**R40H1903**	BRACKET ASM
2954607	**R40H1902**	BRACKET ASM
3004864	**R407991**	BRAKE KIT
3225198	**R4133206**	WHEEL CYLINDER
3491483	**R4577537**	HYDRAULIC HOSE
3491500	**R4111494**	MASTER CYLINDER
3491672	**R44140312**	BRAKE DRUM
3496560	**R44140264**	BRAKE DRUM
3496563	**R44140264**	BRAKE DRUM
3497366	**R44140312**	BRAKE DRUM
3497367	**R44140312**	BRAKE DRUM
3519825	**R44140312**	BRAKE DRUM
3549824	**R44140312**	BRAKE DRUM
3580093	**R4111633**	MASTER CYLINDER
3580242	**R4111633**	MASTER CYLINDER
3580795	**R4090020S**	PISTON
3580819	**R4090018P**	PISTON
3580819	**R4090018S**	PISTON
3633321	**R4133791**	WHEEL CYLINDER
3633322	**R418145**	WHEEL CYLINDER
3633517	**R4133005**	WHEEL CYLINDER
3633852	**R4133207**	WHEEL CYLINDER
3633853	**R4133206**	WHEEL CYLINDER
3637626	**R44141193**	ROTOR
3637776	**R44140264**	BRAKE DRUM
3640588	**R4588472**	HYDRAULIC HOSE
3699241	**R4111633**	MASTER CYLINDER
3766183	**R4111860**	MASTER CYLINDER
3766201	**R4111860**	MASTER CYLINDER
3821532	**R44141397**	ROTOR
3821533	**R44141397**	ROTOR
3821534	**R44141414**	ROTOR
3821715	**R4111494**	MASTER CYLINDER
3823032	**R4577024**	HYDRAULIC HOSE
3823032	**R4577024**	HYDRAULIC HOSE
3879253	**R4122596**	MASTER CYL KIT
3893589	**R4111758**	MASTER CYLINDER
3894703	**R4577024**	HYDRAULIC HOSE
3894703	**R4577024**	HYDRAULIC HOSE
3894707	**R4577024**	HYDRAULIC HOSE

CHRYSLER PART NUMBER	MERITOR PART	DESCRIPTION
3894751	**R4588472**	HYDRAULIC HOSE
3894752	**R4577537**	HYDRAULIC HOSE
3898996	**R4577171**	HYDRAULIC HOSE
4026123	**R4090015S**	PISTON
4030474	**R4577024**	HYDRAULIC HOSE
4030474	**R4577024**	HYDRAULIC HOSE
4037687	**R44140542**	BRAKE DRUM
4037711	**R4577167**	HYDRAULIC HOSE
4037875	**R44141382**	HUB/ROTOR
4086502	**R4133207**	WHEEL CYLINDER
4086503	**R4133206**	WHEEL CYLINDER
4086503	**R4133207**	WHEEL CYLINDER
4086748	**R4577172**	HYDRAULIC HOSE
4086749	**R4577173**	HYDRAULIC HOSE
4086830	**R44141382**	HUB/ROTOR
4088892	**R4133628**	WHEEL CYLINDER
4088893	**R4133627**	WHEEL CYLINDER
4088898	**R4133004**	WHEEL CYLINDER
4088898	**R4133005**	WHEEL CYLINDER
4088899	**R4133004**	WHEEL CYLINDER
4088899	**R4133005**	WHEEL CYLINDER
4088910	**R418145**	WHEEL CYLINDER
4088911	**R4133791**	WHEEL CYLINDER
4089212	**R4111494**	MASTER CYLINDER
4089222	**R4111758**	MASTER CYLINDER
4094104	**R4090020S**	PISTON
4112325	**R4577171**	HYDRAULIC HOSE
4112626	**R44140542**	BRAKE DRUM
4112654	**R4111775**	MASTER CYLINDER
4115552	**R4577024**	HYDRAULIC HOSE
4115552	**R4577024**	HYDRAULIC HOSE
4115557	**R4577167**	HYDRAULIC HOSE
4115563	**R4588472**	HYDRAULIC HOSE
4115565	**R4588472**	HYDRAULIC HOSE
4115566	**R4577537**	HYDRAULIC HOSE
4116932	**R44141193**	ROTOR
4126838	**R4577380**	HYDRAULIC HOSE
4126839	**R4577379**	HYDRAULIC HOSE
4164160	**R44140510**	BRAKE DRUM
4176773	**R4122388**	MASTER CYL KIT
4176774	**R4122388**	MASTER CYL KIT
4205975	**R4122388**	MASTER CYL KIT
4205976	**R4122388**	MASTER CYL KIT
4210866	**R4577172**	HYDRAULIC HOSE
4210867	**R4577173**	HYDRAULIC HOSE
4213241	**R4111860**	MASTER CYLINDER

OEM CROSS REFERENCE LISTING

CHRYSLER PART NUMBER	MERITOR PART	DESCRIPTION
4213242	**R4111860**	MASTER CYLINDER
4219048	**R418162**	WHEEL CYLINDER
4219049	**R4133792**	WHEEL CYLINDER
4238197	**R4111860**	MASTER CYLINDER
4238199	**R4111860**	MASTER CYLINDER
4238578	**R4577380**	HYDRAULIC HOSE
4238579	**R4577379**	HYDRAULIC HOSE
4238865	**R441404090**	BRAKE DRUM
4267347	**R44140510**	BRAKE DRUM
4294152	**R4111983**	MASTER CYLINDER
4294548	**R4113041**	MASTER CYLINDER
4294773	**R4111860**	MASTER CYLINDER
4294884	**R4111860**	MASTER CYLINDER
4294946	**R4111983**	MASTER CYLINDER
4313056	**R4133858**	WHEEL CYLINDER
4313080	**R46538**	LINED SHOE SET
4313243	**R4090074P**	PISTON
4313332	**R4133206**	WHEEL CYLINDER
4313332	**R4133207**	WHEEL CYLINDER
4313333	**R4133206**	WHEEL CYLINDER
4313333	**R4133207**	WHEEL CYLINDER
4313483	**R44141389**	ROTOR
4313493	**R4134064**	WHEEL CYLINDER
4313521	**R4578085**	HYDRAULIC HOSE
4313562	**R4577380**	HYDRAULIC HOSE
4313563	**R4577379**	HYDRAULIC HOSE
4313630	**R4577380**	HYDRAULIC HOSE
4313631	**R4577379**	HYDRAULIC HOSE
4313656	**R4133206**	WHEEL CYLINDER
4313656	**R4133207**	WHEEL CYLINDER
4313657	**R4133206**	WHEEL CYLINDER
4313868	**R4090063P**	PISTON
4313898	**R4133207**	WHEEL CYLINDER
4313899	**R4133206**	WHEEL CYLINDER
4318720	**R4111983**	MASTER CYLINDER
4318739	**R4111860**	MASTER CYLINDER
4364780	**R4090074P**	PISTON
4364786	**R46445**	LINED SHOE SET
4383067	**R4577171**	HYDRAULIC HOSE
4383429	**R44140264**	BRAKE DRUM
4383838	**R4577799**	HYDRAULIC HOSE
4383843	**R4578085**	HYDRAULIC HOSE
4383929	**R4577810**	HYDRAULIC HOSE
4383931	**R4577826**	HYDRAULIC HOSE
4485299	**R4111983**	MASTER CYLINDER
4636389	**R4577826**	HYDRAULIC HOSE

CHRYSLER PART NUMBER	MERITOR PART	DESCRIPTION
4636392	**R4577810**	HYDRAULIC HOSE
4636393	**R4577914**	HYDRAULIC HOSE
4636394	**R4577915**	HYDRAULIC HOSE
4746402	**R4112834**	MASTER CYLINDER
4761602	**R4134102**	WHEEL CYLINDER
4778453	**R4113056**	MASTER CYLINDER
4778456	**R4113057**	MASTER CYLINDER
4798314	**R4411260**	ROTOR
22113474	**R4578360**	HYDRAULIC HOSE
52004200	**R4577914**	HYDRAULIC HOSE
52004251	**R4577909**	HYDRAULIC HOSE
52004620	**R4112519**	MASTER CYLINDER
52006132	**R4578117**	HYDRAULIC HOSE
52006133	**R4578118**	HYDRAULIC HOSE
52007593	**R44140264**	BRAKE DRUM
52007662	**R44141927**	ROTOR
52007675	**R4578387**	HYDRAULIC HOSE
52007676	**R4578129**	HYDRAULIC HOSE
52007677	**R4578130**	HYDRAULIC HOSE
52007715	**R44141924**	ROTOR
52007902	**R44140657**	BRAKE DRUM
52007902	**R44140657**	DRUM
52007935	**R4577927**	HYDRAULIC HOSE
52007936	**R4577928**	HYDRAULIC HOSE
52007937	**R4577927**	HYDRAULIC HOSE
52008005	**R4578132**	HYDRAULIC HOSE
52008008	**R4578133**	HYDRAULIC HOSE
52008009	**R4578134**	HYDRAULIC HOSE
52008207	**R4411260**	ROTOR
52008208	**R4411260**	ROTOR
52008239	**R4578135**	HYDRAULIC HOSE
52008293	**R4578137**	HYDRAULIC HOSE
52008295	**R4578136**	HYDRAULIC HOSE
52008509	**R4578137**	HYDRAULIC HOSE
52008866	**R4578129**	HYDRAULIC HOSE
52008867	**R4578387**	HYDRAULIC HOSE
52008868	**R4578410**	HYDRAULIC HOSE
52008870	**R4578133**	HYDRAULIC HOSE
52008871	**R4578132**	HYDRAULIC HOSE
52008895	**R4578410**	HYDRAULIC HOSE
52008897	**R4578144**	HYDRAULIC HOSE
52008923	**R4578145**	HYDRAULIC HOSE
52009575	**R4578085**	HYDRAULIC HOSE
53002928	**R44141481**	ROTOR
53007766	**R44140264**	BRAKE DRUM
53007767	**R44140542**	BRAKE DRUM

OEM CROSS REFERENCE LISTING

CHRYSLER PART NUMBER	MERITOR PART	DESCRIPTION
3-1288	**R44140312**	BRAKE DRUM
52069877AA	**R4411260**	ROTOR
52069878AA	**R4411260**	ROTOR
52069879AA	**R4411260**	ROTOR
H-35325	**R4133206**	WHEEL CYLINDER
H-35326	**R4133207**	WHEEL CYLINDER
H-43375	**R4133714**	WHEEL CYLINDER
H-43376	**R4133715**	WHEEL CYLINDER
H-43377	**R4133714**	WHEEL CYLINDER
H-43378	**R4133715**	WHEEL CYLINDER
H-68602	**R4133207**	WHEEL CYLINDER
H-68603	**R4133206**	WHEEL CYLINDER
H-71940	**R4133718**	WHEEL CYLINDER
H-71941	**R4133719**	WHEEL CYLINDER
H-78079	**R4577537**	HYDRAULIC HOSE
H-80953	**R4588472**	HYDRAULIC HOSE
H-80957	**R4588519**	HYDRAULIC HOSE
H-84529	**R4577024**	HYDRAULIC HOSE
J3196564	**R4133627**	WHEEL CYLINDER
J3196565	**R4133628**	WHEEL CYLINDER
J3225198	**R4133206**	WHEEL CYLINDER
J3241807	**R4111896**	MASTER CYLINDER
J5352266	**R44140386**	BRAKE DRUM
J5352269	**R44141088**	ROTOR
J5352636	**R44141049**	ROTOR
J5357391	**R44141088**	ROTOR
J5359275	**R44141049**	ROTOR
J8124571	**R4090013S**	PISTON
J8126714	**R4133628**	WHEEL CYLINDER
J8126715	**R4133627**	WHEEL CYLINDER
J8126717	**R4133279**	WHEEL CYLINDER
J8126718	**R4133278**	WHEEL CYLINDER
J8126760	**R4090020S**	PISTON
J8126953	**R4111944**	MASTER CYLINDER
J8129723	**R4133469**	WHEEL CYLINDER
J8129724	**R4133608**	WHEEL CYLINDER
J8129731	**R4111944**	MASTER CYLINDER
J924794	**R4111206**	SLAVE CYLINDER
J937959	**R4133725**	WHEEL CYLINDER
J937960	**R4133726**	WHEEL CYLINDER
MB012096	**R4112073**	MASTER CYLINDER
MB012098	**R4112073**	MASTER CYLINDER
MB012542	**R4112073**	MASTER CYLINDER
MB555115	**R4112073**	MASTER CYLINDER
MB857585	**R4577870**	HYDRAULIC HOSE

DODGE PART NUMBER	MERITOR PART	DESCRIPTION
05003894AA	**R4255915**	CALIPER
05003895AA	**R4255916**	CALIPER
05003906AA	**R4255887**	CALIPER
05003906AB	**R4255887**	CALIPER
05003907AA	**R4255888**	CALIPER
05003907AB	**R4255888**	CALIPER
05018236AA	**R4255865**	CALIPER
05018237AA	**R4255866**	CALIPER
05093266AA	**R421005093266AA**	CALIPER
05093269AA	**R421005093269AA**	CALIPER
05102062AA	**R421005102062AA**	CALIPER
05102063AA	**R421005102063AA**	CALIPER
05103550AA	**R4512290**	BRAKE HOSE
05103602AA	**R4421503R**	ROTOR
05103602AB	**R4421503R**	ROTOR
05103602AC	**R4421503R**	ROTOR
05103603AA	**R4412287**	ROTOR
05103603AB	**R4412287**	ROTOR
05103606AA	**R4412288**	ROTOR
05104561AA	**R4421513R**	ROTOR
05104561AB	**R4421513R**	ROTOR
05104562AA	**R4412289**	ROTOR
05129204AA	**R4512291**	BRAKE HOSE
05129214AA	**R4512292**	BRAKE HOSE

OEM CROSS REFERENCE LISTING

FORD PART NUMBER	MERITOR PART	DESCRIPTION
2C4Z2001AA	**6924083**	DISC BRAKE PAD
2C4Z2B120CA	**60450468002**	CALIPER
2C4Z2B121CA	**60450469002**	CALIPER NEW EX-CHAN
4C4Z1125A	**23-123552-004**	ROTOR
4C4Z1125CA	**23-123552-004**	ROTOR
4C4Z1125GC	**23-123573-004**	ROTOR SAME AS E-61
4C4Z2007EB	**MD786**	STOPMATE DISC
4C4Z2007FB	**MD786A**	MEGA DISC PADS
5C3Z-2552-AA	**R4212244**	CALIPER
5C3Z-2552-BA	**R4212249**	CALIPER
5C3Z-2553-AA	**R4212243**	CALIPER
5C3Z-2553-BA	**R4212248**	CALIPER
5C3Z-2B120-AA	**R4212083**	CALIPER
5C3Z-2B120-BA	**R4212253**	CALIPER
5C3Z-2B120-CA	**R4212077**	CALIPER
5C3Z-2B121-AA	**R4212084**	CALIPER
5C3Z-2B121-BA	**R4212254**	CALIPER
5C3Z-2B121-CA	**R4212078**	CALIPER
6C3Z-2C150-BA	**R4012268**	CALIPER HARDWARE K
B6Q2218A	**R700346**	SHOE
B6Q2221A	**R4166689**	CYLINDER KIT
B6QH2221A	**R4166917**	CYLINDER KIT
B6QH2261B	**R4133420**	WHEEL CYLINDER
B7Q2140A	**R4111150**	MASTER CYLINDER
B7QH2140A	**R4111151**	MASTER CYLINDER
B7T7578A	**R4122882**	REPAIR KIT
B8QH2261A	**R4133336**	WHEEL CYLINDER
B8T2261	**R4133256**	WHEEL CYLINDER
B8T7578A	**R4122882**	REPAIR KIT
B9J2140A	**R4111046**	MASTER CYLINDER
B9TZ7A508A	**R4111208**	SLAVE CYLINDER
C0TT2262A	**R4133390**	WHEEL CYLINDER
C1SS2062A	**R4133484**	WHEEL CYLINDER
C1TT2061C	**R4133366**	WHEEL CYLINDER
C1TT2062C	**R4133367**	WHEEL CYLINDER
C1TT2261A	**R4133207**	WHEEL CYLINDER
C1TT2262A	**R4133206**	WHEEL CYLINDER
C1TT7A542A	**R4111318**	CLUTCH CYLINDER
C1TT7A543G	**R4111161**	CLUTCH CYLINDER
C1TZ7578B	**R4122882**	REPAIR KIT
C1VV2061A	**R4133485**	WHEEL CYLINDER
C1VV2062A	**R4133484**	WHEEL CYLINDER
C2BY2062A	**R4133484**	WHEEL CYLINDER
C2OZ2061C	**R4133615**	WHEEL CYLINDER

FORD PART NUMBER	MERITOR PART	DESCRIPTION
C2OZ2062A	**R4133614**	WHEEL CYLINDER
C2OZ2062C	**R4133614**	WHEEL CYLINDER
C2SZ2261A	**R4133230**	WHEEL CYLINDER
C2VY2061A	**R4133485**	WHEEL CYLINDER
C2VY2062A	**R4133484**	WHEEL CYLINDER
C3AZ2221A	**R4166819**	CYLINDER KIT
C3OZ2061B	**R4133615**	WHEEL CYLINDER
C3TZ-2140C	**R4111266**	MASTER CYLINDER
C3TZ-2140D	**R4111266**	MASTER CYLINDER
C3TZ-2140L	**R4111266**	MASTER CYLINDER
C3TZ7560B	**R4122915**	SLAVE CYL KIT
C4TZ2061D	**R4133715**	WHEEL CYLINDER
C4TZ2062D	**R4133714**	WHEEL CYLINDER
C4TZ2221C	**R4166926**	CYLINDER KIT
C4Z2C026AA	**23-123528-002**	ROTOR
C5TZ2221A	**R4166821**	CYLINDER KIT
C5TZ2261A	**R4133400**	WHEEL CYLINDER
C5TZ2261B	**R4133338**	WHEEL CYLINDER
C5TZ7A508B	**R4111320**	SLAVE CYLINDER
C5TZ7A508D	**R4111206**	SLAVE CYLINDER
C7AZ2261A	**R4133231**	WHEEL CYLINDER
C7AZ2262A	**R4133230**	WHEEL CYLINDER
C8AZ2221A	**R4066851**	SEAL KIT
C8HZ2004A	**R4122934**	CYLINDER KIT
C8HZ2140A	**R4111123**	MASTER CYLINDER
C8TZ1102H	**R44140278**	BRAKE DRUM
C8TZ2004L	**R4122688**	CYLINDER KIT
C8TZ2004M	**R4122688**	CYLINDER KIT
C8TZ2061A	**R4133615**	WHEEL CYLINDER
C8TZ2128A	**R415181**	CYLINDER KIT
C8TZ2218B	**R700401**	SHOE
C8TZ2218C	**R700400**	SHOE
C8TZ2218H	**R700383**	SHOE
C8TZ2218J	**R700381**	SHOE
C8TZ2261B	**R4033607**	WHEEL CYLINDER
C8TZ2261C	**R4133606**	WHEEL CYLINDER
C8TZ2261F	**R4133256**	WHEEL CYLINDER
C8TZ2262E	**R4133584**	WHEEL CYLINDER
C8TZ2262F	**R4133256**	WHEEL CYLINDER
C8UZ2061A	**R4133206**	WHEEL CYLINDER
C8UZ2062A	**R4133206**	WHEEL CYLINDER
C9TZ2061A	**R4133715**	WHEEL CYLINDER
C9TZ2061B	**R4133485**	WHEEL CYLINDER
C9TZ2062A	**R4133714**	WHEEL CYLINDER
C9TZ2062B	**R4133484**	WHEEL CYLINDER
C9TZ2078D	**R4588558**	HYDRAULIC HOSE

OEM CROSS REFERENCE LISTING

FORD PART NUMBER	MERITOR PART	DESCRIPTION
C9TZ-2140L	**R4111266**	MASTER CYLINDER
D0HZ2004B	**R4122688**	CYLINDER KIT
D0HZ2004G	**R4122688**	CYLINDER KIT
D0HZ2140D	**R4111630**	MASTER CYLINDER
D0HZ2140G	**R4111629**	MASTER CYLINDER
D0HZ2140J	**R4111630**	MASTER CYLINDER
D0TZ2061A	**R4133716**	WHEEL CYLINDER
D0TZ2061B	**R4133719**	WHEEL CYLINDER
D0TZ2061C	**R4133582**	WHEEL CYLINDER
D0TZ2061D	**R4133721**	WHEEL CYLINDER
D0TZ2061E	**R4133723**	WHEEL CYLINDER
D0TZ2062A	**R4133717**	WHEEL CYLINDER
D0TZ2062B	**R4133718**	WHEEL CYLINDER
D0TZ2062C	**R4133581**	WHEEL CYLINDER
D0TZ2062D	**R4133720**	WHEEL CYLINDER
D0TZ2062E	**R4133722**	WHEEL CYLINDER
D0TZ2221A	**R4166923**	CYLINDER KIT
D1AZ2262A	**R4133230**	WHEEL CYLINDER
D1FZ2296A	**R40H364**	SPRING KIT
D1TZ1126D	**R44140278**	BRAKE DRUM
D1TZ2061A	**R4133207**	WHEEL CYLINDER
D1TZ2062A	**R4133206**	WHEEL CYLINDER
D1TZ2261A	**R4033607**	WHEEL CYLINDER
D20Z2078A	**R4588519**	HYDRAULIC HOSE
D20Z2196A	**R4090018P**	PISTON
D2AZ2221A	**R4166819**	CYLINDER KIT
D2AZ2221B	**R418187**	CYLINDER KIT
D2HZ2004A	**R4122484**	MASTER CYL KIT
D2HZ2004B	**R4122486**	MASTER CYL KIT
D2HZ2004E	**R4122488**	MASTER CYL KIT
D2HZ2140C	**R4111629**	MASTER CYLINDER
D2HZ2140D	**R4111631**	MASTER CYLINDER
D2HZ2140E	**R4111630**	MASTER CYLINDER
D2HZ2140F	**R4111634**	MASTER CYLINDER
D2HZ2140G	**R4111772**	MASTER CYLINDER
D2OZ2078A	**R4588519**	HYDRAULIC HOSE
D2OZ2262A	**R4133230**	WHEEL CYLINDER
D2SZ2128A	**R4166822**	CYLINDER KIT
D2SZ2261A	**R4133005**	WHEEL CYLINDER
D2SZ2262A	**R4133004**	WHEEL CYLINDER
D2TZ-2140B	**R4111266**	MASTER CYLINDER
D2ZZ2262A	**R4133627**	WHEEL CYLINDER
D30Z2261A	**R4133638**	WHEEL CYLINDER
D30Z2261D	**R4133005**	WHEEL CYLINDER
D30Z2262A	**R4133637**	WHEEL CYLINDER
D30Z2262D	**R4133004**	WHEEL CYLINDER

FORD PART NUMBER	MERITOR PART	DESCRIPTION
D3AZ2078A	**R4588519**	HYDRAULIC HOSE
D3DZ2296A	**R40H133**	SPRING KIT
D3HZ2078D	**R4577686**	HYDRAULIC HOSE
D3OZ2261C	**R4133231**	WHEEL CYLINDER
D3SZ2261A	**R4133005**	WHEEL CYLINDER
D3SZ2262A	**R4133004**	WHEEL CYLINDER
D3TZ1102D	**R44141067**	HUB/ROTOR
D3TZ2061A	**R4133207**	WHEEL CYLINDER
D3TZ2062A	**R4133206**	WHEEL CYLINDER
D3TZ2062B	**R4133206**	WHEEL CYLINDER
D3TZ2078G	**R4588558**	HYDRAULIC HOSE
D3TZ2120A	**R4066781**	SEAL KIT
D3TZ2128A	**R4166820**	CYLINDER KIT
D3TZ2140G	**R4111632**	MASTER CYLINDER
D3TZ2194A	**R4090019S**	PISTON
D3TZ2194A	**R4090019S**	PISTON
D3TZ2221C	**R418187**	CYLINDER KIT
D3TZ2261A	**R4133628**	WHEEL CYLINDER
D3TZ2261C	**R4133279**	WHEEL CYLINDER
D3TZ2261D	**R418145**	WHEEL CYLINDER
D3TZ2261E	**R4133279**	WHEEL CYLINDER
D3TZ2262A	**R4133627**	WHEEL CYLINDER
D3TZ2262B	**R4133230**	WHEEL CYLINDER
D3TZ2262C	**R4133278**	WHEEL CYLINDER
D3TZ2262D	**R4133791**	WHEEL CYLINDER
D3TZ2262E	**R4133278**	WHEEL CYLINDER
D3TZ7A564A	**R4112052**	SLAVE CYLINDER
D3UZ2061A	**R4133207**	WHEEL CYLINDER
D3UZ2061B	**R4133206**	WHEEL CYLINDER
D3UZ2062A	**R4133206**	WHEEL CYLINDER
D3UZ2062B	**R4133207**	WHEEL CYLINDER
D3UZ2221B	**R4166935**	CYLINDER KIT
D3ZZ2261A	**R4133628**	WHEEL CYLINDER
D3ZZ2262A	**R4133627**	WHEEL CYLINDER
D4FZ2196A	**R4090020S**	PISTON
D4FZ2221A	**R4066778**	SEAL KIT
D4UZ1113A	**R44140344**	BRAKE DRUM
D4UZ1114A	**R44140344**	BRAKE DRUM
D5DZ2261A	**R4133231**	WHEEL CYLINDER
D5DZ2262A	**R4133230**	WHEEL CYLINDER
D5HZ1102A	**R44141856**	ROTOR
D5HZ2078A	**R45F124053**	HYDRAULIC HOSE
D5HZ2078G	**R4577686**	HYDRAULIC HOSE
D5MZ2B595	**R4066778**	SEAL KIT
D5TZ1102A	**R44141067**	HUB/ROTOR
D6AZ2078A	**R4588519**	HYDRAULIC HOSE

OEM CROSS REFERENCE LISTING

FORD PART NUMBER	MERITOR PART	DESCRIPTION
D6TZ1102B	**R44141154**	HUB/ROTOR
D6TZ1102C	**R44141153**	HUB/ROTOR
D6TZ1102D	**R44141127**	ROTOR
D6TZ1111A	**R44141127**	ROTOR
D6TZ1126A	**R44140479**	BRAKE DRUM
D6TZ2061A	**R418145**	WHEEL CYLINDER
D6TZ2140B	**R4111669**	MASTER CYLINDER
D6TZ2140L	**R4111931**	MASTER CYLINDER
D6TZ2261A	**R4133726**	WHEEL CYLINDER
D6TZ2261B	**R4133726**	WHEEL CYLINDER
D6TZ2262A	**R4133725**	WHEEL CYLINDER
D6TZ2262B	**R4133725**	WHEEL CYLINDER
D6UZ1113A	**R44140362**	BRAKE DRUM
D6UZ1114A	**R44140362**	BRAKE DRUM
D6UZ2140A	**R4111669**	MASTER CYLINDER
D7HZ-2140A	**R4111913**	MASTER CYLINDER
D7TZ1102A	**R44141174**	ROTOR
D7TZ2140A	**R4111682**	MASTER CYLINDER
D7TZ2140B	**R4111676**	MASTER CYLINDER
D7TZ2140C	**R4111854**	MASTER CYLINDER
D8BZ2261B	**R4133279**	WHEEL CYLINDER
D8BZ2262A	**R4133278**	WHEEL CYLINDER
D8HZ7560A	**R4122342**	SLAVE CYL KIT
D8TZ1102A	**R44141174**	ROTOR
D8TZ1113A	**R44140278**	BRAKE DRUM
D8TZ1113C	**R44140344**	BRAKE DRUM
D8TZ1114A	**R44140278**	BRAKE DRUM
D8TZ1114B	**R44140344**	BRAKE DRUM
D9AZ2221A	**R4066781**	SEAL KIT
D9HZ7A508A	**R4111916**	SLAVE CYLINDER
D9HZ7A508B	**R4111915**	SLAVE CYLINDER
D9HZ7A508D	**R4111768**	SLAVE CYLINDER
E0HT2078LB	**R4577452**	HYDRAULIC HOSE
E0HZ2004A	**R4122387**	CYLINDER KIT
E0HZ2004A	**R4122387**	MASTER CYL KIT
E0HZ2061A	**R4133916**	WHEEL CYLINDER
E0HZ2062A	**R4133915**	WHEEL CYLINDER
E0HZ2078A	**R4577457**	HYDRAULIC HOSE
E0HZ2078F	**R4577454**	HYDRAULIC HOSE
E0HZ2078G	**R4577455**	HYDRAULIC HOSE
E0HZ2078H	**R4577452**	HYDRAULIC HOSE
E0HZ2078J	**R4577453**	HYDRAULIC HOSE
E0HZ2078K	**R4577686**	HYDRAULIC HOSE
E0HZ2078M	**R4577452**	HYDRAULIC HOSE
E0HZ2078N	**R4577453**	HYDRAULIC HOSE
E0HZ2078P	**R4577460**	HYDRAULIC HOSE

FORD PART NUMBER	MERITOR PART	DESCRIPTION
E0HZ2140A	**R4111911**	MASTER CYLINDER
E0TZ1102B	**R44141197**	HUB/ROTOR
E0TZ1102C	**R44141234**	HUB/ROTOR
E0TZ1102D	**R44141127**	ROTOR
E0TZ1102E	**R44141235**	HUB/ROTOR
E0TZ1102F	**R44141237**	ROTOR
E0TZ1102G	**R44141237**	ROTOR
E0TZ1102H	**R44141237**	ROTOR
E0TZ1102J	**R44141234**	HUB/ROTOR
E0TZ1102L	**R44141127**	ROTOR
E0TZ1126B	**R44140397**	BRAKE DRUM
E0TZ2078E	**R4577309**	HYDRAULIC HOSE
E0TZ2078F	**R4577078**	HYDRAULIC HOSE
E0TZ2140A	**R4111861**	MASTER CYLINDER
E0TZ2140B	**R4111856**	MASTER CYLINDER
E0TZ2196A	**R4090020S**	PISTON
E0TZ2196B	**R4090019S**	PISTON
E0TZ2282B	**R4577247**	HYDRAULIC HOSE
E0ZZ2128A	**R4166599**	CYLINDER KIT
E17Z2140A	**R4111917**	MASTER CYLINDER
E1TZ1102B	**R44141237**	ROTOR
E1TZ1102D	**R44141237**	ROTOR
E1TZ2078A	**R4577312**	HYDRAULIC HOSE
E1TZ2078B	**R4577309**	HYDRAULIC HOSE
E2HZ2140A	**R4111911**	MASTER CYLINDER
E2HZ2140C	**R4111911**	MASTER CYLINDER
E2HZ7A508B	**R4112166**	SLAVE CYLINDER
E2TZ2261A	**R418145**	WHEEL CYLINDER
E2TZ2261B	**R4133726**	WHEEL CYLINDER
E2TZ2261D	**R4133638**	WHEEL CYLINDER
E2TZ2262A	**R4133791**	WHEEL CYLINDER
E2TZ2262B	**R4133725**	WHEEL CYLINDER
E2TZ2262D	**R4133637**	WHEEL CYLINDER
E3HZ1102A	**23122691002**	ROTOR
E3HZ2078A	**R4577461**	HYDRAULIC HOSE
E3HZ2078A	**R4577461**	HYDRAULIC HOSE
E3HZ2282A	**R4577870**	HYDRAULIC HOSE
E3HZ2B120A	**60050145**	CALIPER
E3HZ-2K395A	**69270702**	PISTON
E3TZ1126B	**R44140493**	BRAKE DRUM
E3TZ2004B	**R4122324**	MASTER CYL KIT
E3TZ2120A	**R4066530**	SEAL KIT
E3TZ2140A	**R4111930**	MASTER CYLINDER
E3TZ2140B	**R4111931**	MASTER CYLINDER
E3TZ2196A	**R4090020S**	PISTON
E3TZ2261B	**R4133851**	WHEEL CYLINDER

OEM CROSS REFERENCE LISTING

FORD PART NUMBER	MERITOR PART	DESCRIPTION
E3TZ7A543	**R4112119**	CLUTCH CYLINDER
E3TZ7A543A	**R4112117**	CLUTCH CYLINDER
E3TZ7A543B	**R4112119**	CLUTCH CYLINDER
E3TZ7A564A	**R4112052**	SLAVE CYLINDER
E3TZ7A564C	**R4112054**	SLAVE CYLINDER
E3TZ7A564D	**R4112055**	SLAVE CYLINDER
E43Z2196A	**R4090063P**	PISTON
E43Z2221A	**R4066517**	SEAL KIT
E4H-2B107D	**SP7895S**	CYLINDER KIT
E4HZ1125A	**23122700002**	ROTOR
E4HZ1125C	**23122703002**	ROTOR
E4HZ1125D	**23122743002**	ROTOR
E4HZ2001C	**MD224**	STOPMATE DISC
E4HZ2004B	**R4122346**	MASTER CYL KIT
E4HZ2140A	**R4111999**	MASTER CYLINDER
E4HZ2140B	**R4111995**	MASTER CYLINDER
E4HZ-2140B	**R4111873**	MASTER CYLINDER
E4HZ2207A	**60050266**	SEAL KIT
E4HZ-2211E	**291003**	RH BACKING PLATE
E4HZ-2211F	**291005**	RH BACKING PLATE
E4HZ-2212E	**291002**	LH BACKING PLATE
E4HZ-2212F	**291004**	LH BACKING PLATE
E4HZ22261C	**201184**	WHEEL CYLINDER
E4HZ-22610	**201186**	WHEEL CYLINDER
E4HZ2261A	**201184**	WHEEL CYLINDER
E4HZ2261B	**201186**	WHEEL CYLINDER
E4HZ2261C	**201184**	WHEEL CYLINDER
E4HZ2261D	**201186**	WHEEL CYLINDER
E4HZ2262A	**201183**	WHEEL CYLINDER
E4HZ2262B	**201185**	WHEEL CYLINDER
E4HZ2262C	**201183**	WHEEL CYLINDER
E4HZ2262D	**201185**	WHEEL CYLINDER
E4HZ2282E	**R4577463**	HYDRAULIC HOSE
E4HZ2296A	**R40H618**	SPRING KIT
E4HZ2296B	**R40H618**	SPRING KIT
E4HZ2297	**R40H618**	SPRING KIT
E4HZ2297A	**R40H618**	SPRING KIT
E4HZ2297B	**R40H618**	SPRING KIT
E4HZ28487A	**60050153**	HARDWARE KIT
E4HZ28552A	**60050153**	HARDWARE KIT
E4HZ2B017A	**SP7873S**	CYLINDER KIT
E4HZ2B107A	**SP7873S**	CYLINDER KIT
E4HZ2B107B	**SP7895S**	CYLINDER KIT
E4HZ2B107C	**SP7873S**	CYLINDER KIT
E4HZ2B107D	**SP7895S**	CYLINDER KIT
E4HZ2B120A	**60050150**	CALIPER

FORD PART NUMBER	MERITOR PART	DESCRIPTION
E4HZ-2C1198F	**201180**	EXPANDER
E4HZ2C197B	**SP7880S**	EXPANDER KIT
E4HZ2C198A	**201179**	EXPANDER
E4HZ2C198B	**201181**	WHEEL CYLINDER
E4HZ2C198C	**201180**	EXPANDER
E4HZ2C198D	**201182**	WHEEL CYLINDER
E4HZ2C198E	**201179**	EXPANDER
E4HZ2C198F	**201180**	EXPANDER
E4HZ-2C198G	**201181**	WHEEL CYLINDER
E4HZ-2C198H	**201182**	WHEEL CYLINDER
E4HZ2C199A	**291000**	ADJ ASSEMBLY
E4HZ2C200A	**SP7887S**	ADJ ASSEMBLY
E4HZ2C200B	**291000**	ADJ ASSEMBLY
E4HZ2C200B	**SP7888S**	ADJ ASSEMBLY
E4HZ2C200C	**SP7887S**	ADJ ASSEMBLY
E4HZ2C200D	**SP7888S**	ADJ ASSEMBLY
E4HZ-2L198A	**SP7873S**	CYLINDER KIT
E4HZ-2L198B	**SP7895S**	CYLINDER KIT
E4HZ-2S62B	**201185**	WHEEL CYLINDER
E4HZ-2S62D	**201185**	WHEEL CYLINDER
E4TZ1102A	**R44141127**	ROTOR
E4TZ1113A	**R44140278**	BRAKE DRUM
E4TZ1113B	**R44140344**	BRAKE DRUM
E4TZ1113C	**R44140278**	BRAKE DRUM
E4TZ1114A	**R44140344**	BRAKE DRUM
E4TZ1114B	**R44140278**	BRAKE DRUM
E4TZ1126B	**R44140479**	BRAKE DRUM
E4TZ1126D	**R44140397**	BRAKE DRUM
E4TZ2140A	**R4112007**	MASTER CYLINDER
E4TZ2140B	**R4112008**	MASTER CYLINDER
E4TZ2261A	**R4133904**	WHEEL CYLINDER
E4TZ2261B	**R4133207**	WHEEL CYLINDER
E4TZ2261C	**R4133279**	WHEEL CYLINDER
E4TZ2262B	**R4133206**	WHEEL CYLINDER
E4TZ2262C	**R4133278**	WHEEL CYLINDER
E4TZ7A564A	**R4112120**	SLAVE CYLINDER
E4TZ7A564D	**R4112120**	SLAVE CYLINDER
E4UZ2078A	**R4577444**	HYDRAULIC HOSE
E4UZ2078B	**R4577443**	HYDRAULIC HOSE
E4UZ7A543A	**R4112118**	CLUTCH CYLINDER
E59Z7A543	**R4112119**	CLUTCH CYLINDER
E5TZ1102B	**R44141808**	ROTOR
E5TZ1126A	**R44140468**	BRAKE DRUM
E5TZ1126B	**R44140504**	BRAKE DRUM
E5TZ2282A	**R4577612**	HYDRAULIC HOSE
E5TZ2282B	**R4577613**	HYDRAULIC HOSE

OEM CROSS REFERENCE LISTING

FORD PART NUMBER	MERITOR PART	DESCRIPTION
E5UZ2282A	**R4577614**	HYDRAULIC HOSE
E69Z2140A	**R4112183**	MASTER CYLINDER
E69Z2261A	**R4133930**	WHEEL CYLINDER
E69Z7A543A	**R4112119**	CLUTCH CYLINDER
E6HZ1125F	**Discontinued**	ROTOR
E6HZ1125G	**Discontinued**	ROTOR
E6HZ2001D	**MD236**	STOPMATE DISC
E6HZ2140A	**R4112466**	MASTER CYLINDER
E6HZ26198F	**201180**	EXPANDER
E6HZ-2B107A	**SP7873S**	CYLINDER KIT
E6HZ-2B107B	**SP7895S**	CYLINDER KIT
E6HZ-2B107C	**SP7873S**	CYLINDER KIT
E6HZ-2B107D	**SP7895S**	CYLINDER KIT
E6HZ2B120B	**60050150**	CALIPER
E6HZ2C150A	**R407182**	GUIDE PIN KIT
E6HZ2C198A	**201180**	EXPANDER
E6HZ2C198B	**201179**	EXPANDER
E6HZ2C198C	**201182**	WHEEL CYLINDER
E6HZ2C198D	**201181**	WHEEL CYLINDER
E6HZ2C198E	**201179**	EXPANDER
E6HZ2C198F	**201180**	EXPANDER
E6HZ2C198G	**201181**	WHEEL CYLINDER
E6HZ-2C198G	**201180**	EXPANDER
E6HZ2C198H	**201182**	WHEEL CYLINDER
E6TZ1102A	**R44141067**	HUB/ROTOR
E6TZ1126A	**R44140520**	BRAKE DRUM
E7HZ2001A	**MD379**	STOPMATE DISC
E7HZ2L296A	**R407181**	RETAINER KIT
E7SZ7A508A	**R4112055**	SLAVE CYLINDER
E7TZ1102C	**R44141234**	HUB/ROTOR
E7TZ1102D	**R44141127**	ROTOR
E7TZ1102E	**R44141237**	ROTOR
E7TZ1102F	**R44141237**	ROTOR
E7TZ1126A	**R44140545**	BRAKE DRUM
E7TZ2120A	**R4066395**	SEAL KIT
E7TZ2140B	**R4112197**	MASTER CYLINDER
E7TZ-2140B	**R148228**	MASTER CYLINDER
E7TZ2140C	**R4112198**	MASTER CYLINDER
E7TZ2140F	**R4112197**	MASTER CYLINDER
E7TZ-2140F	**R148228**	MASTER CYLINDER
E7TZ2261A	**R4133946**	WHEEL CYLINDER
E7TZ2262A	**R4133945**	WHEEL CYLINDER
E7UZ1126A	**R44140504**	BRAKE DRUM
E7UZ1126B	**R44140545**	BRAKE DRUM
E7UZ-2140B	**R4112200**	MASTER CYLINDER
E7UZ2140C	**R4112198**	MASTER CYLINDER

FORD PART NUMBER	MERITOR PART	DESCRIPTION
E8TZ1102B	**R44141237**	ROTOR
E8TZ1102C	**R44141237**	ROTOR
E8TZ1125A	**R44141455**	ROTOR
E8TZ2078C	**R451554**	HYDRAULIC HOSE
E8TZ2078D	**R4578159**	HYDRAULIC HOSE
E8TZ2120A	**R4066204**	SEAL KIT
E8TZ-2140A	**R4112357**	MASTER CYLINDER
E8TZ2196B	**R4090088S**	PISTON
E8TZ2268A	**R451554**	HYDRAULIC HOSE
E8TZ2282A	**R4577245**	HYDRAULIC HOSE
E8TZ2282B	**R4577245**	HYDRAULIC HOSE
E8TZ2282C	**R4578666**	HYDRAULIC HOSE
E8TZ2B120A	**R4255604**	NEW CALIPER
E8TZ-2B120A	**R4255604**	CALIPER
E8TZ2B121A	**R4255605**	NEW CALIPER
E8TZ-2B121A	**R4255605**	CALIPER
E8TZ2B164A	**R40H5735**	HARDWARE KIT
E8TZ2C150A	**R40H5735**	HARDWARE KIT
E8TZ4022A	**R4577245**	HYDRAULIC HOSE
E8UZ2282B	**R4578618**	HYDRAULIC HOSE
E9TZ2078C	**R4578165**	HYDRAULIC HOSE
E9TZ2268B	**R451554**	HYDRAULIC HOSE
E9TZ2282A	**R4578166**	HYDRAULIC HOSE
E9TZ2282C	**R451537**	HYDRAULIC HOSE
EHZ-2261B	**201186**	WHEEL CYLINDER
EOTZ2078E	**R4577309**	HYDRAULIC HOSE
F07Z1102A	**R44141599**	ROTOR
F07Z1102A	**R44141599**	ROTOR
F09Z-2140C	**R4110352**	MASTER CYLINDER
F09Z-2140D	**R4110352**	MASTER CYLINDER
F0HT2078CA	**R4577461**	HYDRAULIC HOSE
F0HT2282CA	**R4577870**	HYDRAULIC HOSE
F0HZ2078B	**R4577461**	HYDRAULIC HOSE
F0HZ2078B	**R4577461**	HYDRAULIC HOSE
F0HZ2282B	**R4577870**	HYDRAULIC HOSE
F0HZ-2282B	**R4577870**	HYDRAULIC HOSE
F0TZ2078A	**R4578169**	HYDRAULIC HOSE
F0TZ2078B	**R4578303**	HYDRAULIC HOSE
F0TZ2078C	**R4578001**	HYDRAULIC HOSE
F0TZ-2140A	**R4112575**	MASTER CYLINDER
F0UZ2282B	**R4578610**	HYDRAULIC HOSE
F19Z2140B	**R4110352**	MASTER CYLINDER
F1LY2A478A	**R4578209**	HYDRAULIC HOSE
F2HZ2261A	**201184**	WHEEL CYLINDER
F2HZ2262A	**201183**	WHEEL CYLINDER
F2HZ2B107A	**SP7873S**	CYLINDER KIT

OEM CROSS REFERENCE LISTING

FORD PART NUMBER	MERITOR PART	DESCRIPTION
F2HZ2B107B	**SP7873S**	CYLINDER KIT
F2HZ2C198A	**201179**	EXPANDER
F2HZ2C198B	**201180**	EXPANDER
F2HZ-2L198A	**SP7873S**	CYLINDER KIT
F2TZ2282A	**R4578182**	HYDRAULIC HOSE
F2TZ2282B	**R4578183**	HYDRAULIC HOSE
F2TZ2282C	**R4578184**	HYDRAULIC HOSE
F2TZ2282D	**R4578332**	HYDRAULIC HOSE
F2UZ1102A	**R44141798**	ROTOR
F2UZ2078B	**R4577277**	HYDRAULIC HOSE
F2UZ2078D	**R4578187**	HYDRAULIC HOSE
F2UZ2078E	**R4578188**	HYDRAULIC HOSE
F2UZ-2140A	**R4112641**	MASTER CYLINDER
F2UZ-2140B	**R4112641**	MASTER CYLINDER
F2UZ2261A	**R4133596**	WHEEL CYLINDER
F2UZ2262A	**R4133595**	WHEEL CYLINDER
F2UZ2282A	**R4578305**	HYDRAULIC HOSE
F3TZ1102C	**R44141599**	ROTOR
F3TZ1102C	**R44141599**	ROTOR
F3TZ2078A	**R4578312**	HYDRAULIC HOSE
F3TZ2078B	**R4578313**	HYDRAULIC HOSE
F3TZ2140A	**R4112833**	MASTER CYLINDER
F3TZ-2140A	**R148228**	MASTER CYLINDER
F3TZ2140B	**R4112833**	MASTER CYLINDER
F3TZ-2140B	**R148228**	MASTER CYLINDER
F4HZ-1125A	**23123439002**	ROTOR
F4HZ-1125C	**23123458002**	ROTOR
F4TZ1102B	**R44141905**	ROTOR
F4TZ1102BB	**R44141905**	ROTOR
F4TZ2078C	**R4578206**	HYDRAULIC HOSE
F4TZ2078E	**R451554**	HYDRAULIC HOSE
F4TZ2078F	**R4578303**	HYDRAULIC HOSE
F4TZ2140A	**R4112833**	MASTER CYLINDER
F4TZ-2140A	**R4112200**	MASTER CYLINDER
F4TZ-2140B	**R4112840**	MASTER CYLINDER
F4TZ2140C	**R4112843**	MASTER CYLINDER
F4TZ-2140D	**R4112357**	MASTER CYLINDER
F4TZ-2140F	**R148228**	MASTER CYLINDER
F4TZ-2140F	**R4112833**	MASTER CYLINDER
F4TZ-2140G	**R4112833**	MASTER CYLINDER
F4TZ-2140H	**R4112842**	MASTER CYLINDER
F4TZ-2B120AA	**R4255604**	CALIPER
F4TZ-2B121AA	**R4255605**	CALIPER
F4UZ1102C	**R44141917**	ROTOR
F4UZ1102D	**R44141934**	ROTOR
F4UZ1126A	**R44140545**	BRAKE DRUM

FORD PART NUMBER	MERITOR PART	DESCRIPTION
F4UZ2078A	**R4578208**	HYDRAULIC HOSE
F4UZ2078B	**R4578209**	HYDRAULIC HOSE
F4UZ2078C	**R4578210**	HYDRAULIC HOSE
F58Z2078A	**R4578218**	HYDRAULIC HOSE
F58Z2282B	**R4578219**	HYDRAULIC HOSE
F5TZ1102A	**R44145055**	ROTOR
F5TZ1102E	**R44145049**	ROTOR
F5TZ1102F	**R44145054**	ROTOR
F5TZ1125A	**R44145075**	ROTOR
F5TZ2078A	**R4578324**	HYDRAULIC HOSE
F5TZ2078B	**R4578325**	HYDRAULIC HOSE
F5TZ2078C	**R4578326**	HYDRAULIC HOSE
F5TZ2078D	**R4578327**	HYDRAULIC HOSE
F5UZ1102A	**R44145057**	ROTOR
F5UZ1102B	**R44145071**	ROTOR
F5UZ1102C	**R44145068**	ROTOR
F5UZ-1126A	**R44140675**	BRAKE DRUM
F5UZ2078A	**R4578331**	HYDRAULIC HOSE
F5UZ2078B	**R4578332**	HYDRAULIC HOSE
F5UZ2078C	**R4578333**	HYDRAULIC HOSE
F65Z1102AC	**R44145240**	ROTOR
F65Z2078AB	**R4578513**	HYDRAULIC HOSE
F65Z2078AC	**R4578514**	HYDRAULIC HOSE
F65Z2078BA	**R4578515**	HYDRAULIC HOSE
F65Z2078CA	**R4578516**	HYDRAULIC HOSE
F67Z1125BA	**R44145075**	ROTOR
F6TZ2140AA	**R4113355**	MASTER CYLINDER
F6TZ2140BA	**R4110382**	MASTER CYLINDER
F6TZ2140EA	**R4110384**	MASTER CYLINDER
F6TZ2140FA	**R4113263**	MASTER CYLINDER
F75Z1125AC	**R44145145**	ROTOR
F75Z-2120-BA	**R4012266**	BOOT & SEAL KIT
F75Z2140GC	**R4110384**	MASTER CYLINDER
F75Z2140HC	**R4113263**	MASTER CYLINDER
F75Z2140KA	**R4110382**	MASTER CYLINDER
F75Z2C026CC	**R44145139**	ROTOR
F7TZ-2B120-AA	**R4255748**	CALIPER
F7TZ-2B121-AA	**R4255749**	CALIPER
F7UZ1102AA	**R44145071**	ROTOR
F7UZ1102BA	**R44145068**	ROTOR
F7UZ2140DB	**R4113284**	MASTER CYLINDER
F7UZ2140EB	**R4113282**	MASTER CYLINDER
F7UZ2140PB	**R4113282**	MASTER CYLINDER
F7UZ2140SB	**R4113284**	MASTER CYLINDER
F7Z2140HC	**R4113263**	MASTER CYLINDER
F81AZ2B121DD	**60450469002**	CALIPER NEW EX-CHAN

OEM CROSS REFERENCE LISTING

FORD PART NUMBER	MERITOR PART	DESCRIPTION
F81AZB120DD	**60450468002**	CALIPER
F81Z 1102 DB	**R44145267**	ROTOR
F81Z 1102 LA	**R44145256**	ROTOR
F81Z 1125 AA	**R44145245**	ROTOR
F81Z 2C 026 AA	**R44145274**	ROTOR
F81Z-2B120-AA	**R4255861**	CALIPER
F81Z-2B121-AA	**R4255862**	CALIPER
F8UZ 1102 CA	**R44145071**	ROTOR
F8UZ1102AA	**R44145049**	ROTOR
F8UZ1102CA	**R44145071**	ROTOR
F8UZ1126AB	**R44140545**	BRAKE DRUM
FO9Z-2140C	**R4110352**	MASTER CYLINDER
FO9Z-2140D	**R4110352**	MASTER CYLINDER
FOTZ2078B	**R4578303**	HYDRAULIC HOSE
FOUZ2282B	**R4578610**	HYDRAULIC HOSE
XC2Z-1126AA	**R44140675**	BRAKE DRUM
XC2Z-2552-AD	**R4255857**	CALIPER
XC2Z-2553-AD	**R4255858**	CALIPER
XL3Z-2B120-EA	**R4255794**	CALIPER
XL3Z-2B121-EA	**R4255795**	CALIPER
YC3Z1125AA	**23-123527-002**	ROTOR
YC3Z-2B120-GA	**R4255861**	CALIPER
YC3Z-2B121-BA	**R4255862**	CALIPER
YC3Z2C026AA	**23-123498-002**	ROTOR
YC3Z2C026BA	**23-123461-002**	ROTOR
YC4Z2200BB	**MD786A**	MEGA DISC PADS

GMC / CHEVEROLET PART NUMBER	MERITOR PART	DESCRIPTION
155445	**R46473**	LINED SHOE SET
230251	**R4122705**	CYLINDER KIT
325068	**R44141088**	ROTOR
334303	**R40H3500**	ADJUSTER KIT
334304	**R40H3501**	ADJUSTER KIT
335075	**R4111944**	MASTER CYLINDER
335152	**R4122643**	CYLINDER KIT
341520	**R40H550**	SPRING KIT
344015	**R44141152**	HUB/ROTOR
344016	**R44141152**	HUB/ROTOR
345699	**R4122599**	CYLINDER KIT
352665	**R700442**	SHOE
359491	**R44140316**	BRAKE DRUM
359492	**R44140315**	BRAKE DRUM
366372	**R4090028S**	PISTON
366665	**R4577010**	HYDRAULIC HOSE
372339	**R4066715**	SEAL KIT
372378	**R46451**	LINED SHOE SET
372379	**R46452**	LINED SHOE SET
379821	**R44141049**	ROTOR
412685	**R40H9206**	HOLD DOWN KIT
457714	**R44141152**	HUB/ROTOR
458842	**R44141088**	ROTOR
458857	**R44141049**	ROTOR
464109	**R4255099**	CALIPER
464110	**R4255098**	CALIPER
465470	**R4111668**	MASTER CYLINDER
473186	**R4133400**	WHEEL CYLINDER
474004	**R46473**	LINED SHOE SET
474100	**R4066715**	SEAL KIT
475985	**R44141469**	ROTOR
650668	**R700381**	SHOE
651497	**R700346**	SHOE
685223	**R4111618**	MASTER CYLINDER
790328	**23122693002**	ROTOR
1154577	**R46462**	LINED SHOE SET
1200208	**R46462**	LINED SHOE SET
1237067	**R44141043**	HUB/ROTOR
1416653	**R40H599**	SPRING KIT
1567207	**R4577765**	HYDRAULIC HOSE
1569970	**23122729002**	ROTOR
1613287	**R44141261**	ROTOR
1799993	**R4577760**	HYDRAULIC HOSE
2035321	**R4577481**	HYDRAULIC HOSE
2035458	**R4111885**	MASTER CYLINDER
2038405	**R4577481**	HYDRAULIC HOSE

OEM CROSS REFERENCE LISTING

GMC / CHEVEROLET PART NUMBER	MERITOR PART	DESCRIPTION
2048572	**R4511240**	HYDRAULIC HOSE
2048574	**R4511240**	HYDRAULIC HOSE
2054811	**R4122386**	MASTER CYL KIT
2065061	**R4577484**	HYDRAULIC HOSE
2254354	**R4133321**	WHEEL CYLINDER
2254354	**R4133321**	WHEEL CYLINDER
2254355	**R4133320**	WHEEL CYLINDER
2254355	**R4133320**	WHEEL CYLINDER
2276166	**R4166923**	CYLINDER KIT
2331945	**R4133336**	WHEEL CYLINDER
2331949	**R4133420**	WHEEL CYLINDER
2331950	**R4166897**	CYLINDER KIT
2393941	**23122693002**	ROTOR
2404319	**R4133380**	WHEEL CYLINDER
2404320	**R4133379**	WHEEL CYLINDER
2404321	**R4133377**	WHEEL CYLINDER
2404322	**R4133376**	WHEEL CYLINDER
2431345	**R40H1902**	BRACKET ASM
2431436	**R40H1903**	BRACKET ASM
2494706	**R4122809**	CYLINDER KIT
2620632	**R4133655**	WHEEL CYLINDER
2620633	**R4133656**	WHEEL CYLINDER
2620636	**R4111944**	MASTER CYLINDER
2621260	**R4133709**	WHEEL CYLINDER
2622207	**R4090013S**	PISTON
2622302	**R4122643**	CYLINDER KIT
2622820	**R4133714**	WHEEL CYLINDER
2622821	**R4133715**	WHEEL CYLINDER
3772241	**R4133338**	WHEEL CYLINDER
3772245	**R4133400**	WHEEL CYLINDER
3838087	**R4133206**	WHEEL CYLINDER
3838088	**R4133207**	WHEEL CYLINDER
3856847	**R40H3500**	ADJUSTER KIT
3856848	**R40H3501**	ADJUSTER KIT
3873517	**R40H3500**	ADJUSTER KIT
3873518	**R40H3501**	ADJUSTER KIT
3883081	**R4111455**	MASTER CYLINDER
3887014	**R4122682**	CYLINDER KIT
3896695	**R4111455**	MASTER CYLINDER
3896695	**R4111455**	MASTER CYLINDER
3910003	**R4122681**	CYLINDER KIT
3910726	**R4577479**	HYDRAULIC HOSE
3910727	**R4577479**	HYDRAULIC HOSE
3910728	**R4511250**	HYDRAULIC HOSE
3912368	**R4122679**	CYLINDER KIT
3912376	**R4122809**	CYLINDER KIT

GMC / CHEVEROLET PART NUMBER	MERITOR PART	DESCRIPTION
3933995	**R40H1902**	BRACKET ASM
3933996	**R40H1903**	BRACKET ASM
3965376	**R4111618**	MASTER CYLINDER
3978936	**R4577479**	HYDRAULIC HOSE
3987461	**R40H1842**	ADJUSTER SCREW
3987461	**R40H3510**	ADJUSTER KIT
3987462	**R40H1843**	ADJUSTER SCREW
3987462	**R40H3511**	ADJUSTER KIT
3987475	**R40H3510**	ADJUSTER KIT
3987476	**R40H3511**	ADJUSTER KIT
3995722	**R44141049**	ROTOR
3995723	**R44141049**	ROTOR
3995887	**R44140253**	BRAKE DRUM
5450643	**R4133003**	WHEEL CYLINDER
5450644	**R4133002**	WHEEL CYLINDER
5456586	**R4133003**	WHEEL CYLINDER
5456587	**R4133002**	WHEEL CYLINDER
5457146	**R4133367**	WHEEL CYLINDER
5457147	**R4133406**	WHEEL CYLINDER
5457162	**R4133206**	WHEEL CYLINDER
5457163	**R4133207**	WHEEL CYLINDER
5459446	**R40H9206**	HOLD DOWN KIT
5460399	**R404121**	HOLD DOWN KIT
5462086	**R4166822**	CYLINDER KIT
5462090	**R4166819**	CYLINDER KIT
5462986	**R4133206**	WHEEL CYLINDER
5462987	**R4133207**	WHEEL CYLINDER
5463030	**R4133207**	WHEEL CYLINDER
5463031	**R4133206**	WHEEL CYLINDER
5463031	**R4133207**	WHEEL CYLINDER
5463361	**R4166852**	CYLINDER KIT
5464763	**R4166852**	CYLINDER KIT
5465752	**R4133003**	WHEEL CYLINDER
5465753	**R4133002**	WHEEL CYLINDER
5467736	**R4111191**	CLUTCH CYLINDER
5468767	**R4066848**	SEAL KIT
5470497	**R40H5500**	BRAKE KIT
5472326	**R4166620**	CYLINDER KIT
5472328	**R4166620**	CYLINDER KIT
5472347	**R46462**	LINED SHOE SET
5472489	**R415194**	CYLINDER KIT
5472732	**R4111395**	MASTER CYLINDER
5472738	**R4111395**	MASTER CYLINDER
5472820	**R4133655**	WHEEL CYLINDER
5472821	**R4133656**	WHEEL CYLINDER
5473012	**R4111266**	MASTER CYLINDER

OEM CROSS REFERENCE LISTING

GMC / CHEVEROLET PART NUMBER	MERITOR PART	DESCRIPTION
5473043	**R4133003**	WHEEL CYLINDER
5473062	**R4133320**	WHEEL CYLINDER
5473062	**R4133320**	WHEEL CYLINDER
5473063	**R4133321**	WHEEL CYLINDER
5473077	**R4133714**	WHEEL CYLINDER
5473078	**R4133715**	WHEEL CYLINDER
5473113	**R4133376**	WHEEL CYLINDER
5473114	**R4133377**	WHEEL CYLINDER
5473145	**R4133338**	WHEEL CYLINDER
5473156	**R4133420**	WHEEL CYLINDER
5473181	**R4166689**	CYLINDER KIT
6259161	**R4122598**	CYLINDER KIT
6259173	**R4111583**	MASTER CYLINDER
6260588	**R44140363**	BRAKE DRUM
6260726	**R4122597**	CYLINDER KIT
6260806	**R44141130**	HUB/ROTOR
6260807	**R44141152**	HUB/ROTOR
6260830	**R44140387**	BRAKE DRUM
6260831	**R44140388**	BRAKE DRUM
6273936	**R4111494**	MASTER CYLINDER
6274216	**R44141043**	HUB/ROTOR
9754065	**R4511250**	HYDRAULIC HOSE
9757641	**R4577479**	HYDRAULIC HOSE
9759282	**R4577479**	HYDRAULIC HOSE
9761249	**R4577481**	HYDRAULIC HOSE
9762564	**R4577252**	HYDRAULIC HOSE
9762707	**R4577321**	HYDRAULIC HOSE
9762708	**R4577187**	HYDRAULIC HOSE
9762801	**R4577240**	HYDRAULIC HOSE
9762802	**R4577241**	HYDRAULIC HOSE
9762803	**R4577332**	HYDRAULIC HOSE
9762804	**R4577333**	HYDRAULIC HOSE
9763817	**R4577321**	HYDRAULIC HOSE
9763817	**R4577321**	HYDRAULIC HOSE
9763818	**R4577187**	HYDRAULIC HOSE
9763818	**R4577187**	HYDRAULIC HOSE
9763818	**R4577187**	HYDRAULIC HOSE
9764361	**R4577321**	HYDRAULIC HOSE
9764362	**R4577187**	HYDRAULIC HOSE
9764362	**R4577187**	HYDRAULIC HOSE
9764362	**R4577187**	HYDRAULIC HOSE
9764556	**R4577187**	HYDRAULIC HOSE
9764711	**R4577548**	HYDRAULIC HOSE
9764712	**R4577333**	HYDRAULIC HOSE
9766865	**R4577329**	HYDRAULIC HOSE
9766866	**R4577330**	HYDRAULIC HOSE

GMC / CHEVEROLET PART NUMBER	MERITOR PART	DESCRIPTION
9768950	**R4577416**	HYDRAULIC HOSE
10041019	**R4122160**	SLAVE CYL KIT
10041019	**R4122210**	SLAVE CYL KIT
10373678	**60450468002**	CALIPER
10373679	**60450469002**	CALIPER NEW EX-CHANGE
10373680	**60450473001**	CALIPER NEW EX-CHANGE
10373681	**60450474001**	CALIPER NEW EX-CHANGE
12321433	**R46473**	LINED SHOE SET
12350920	**R4133320**	WHEEL CYLINDER
12350921	**R4133321**	WHEEL CYLINDER
12361076	**2312344002**	ROTOR
12386682	**23-123486-002**	ROTOR
12386685	**23123495002**	ROTOR
12386716	**23123433002**	ROTOR
12386718	**23123485002**	ROTOR
12387799	**60450455**	CALIPER NEW EX-CHANGE
12387800	**60450454**	CALIPER NEW EX-CHANGE
12387805	**6924083**	DISC BRAKE PAD
12388047	**23123489002**	ROTOR
12471685	**MD370**	STOPMATE DISC
12475227	**MD224**	STOPMATE DISC
12544299	**MD225**	STOPMATE DISC
12547509	**R4411316**	ROTOR
12547510	**R44145028**	ROTOR
12547785	**23123434002**	ROTOR
12549137	**R4411260**	ROTOR
12549138	**R4411260**	ROTOR
14002283	**R46451**	LINED SHOE SET
14004593	**R4577321**	HYDRAULIC HOSE
14004594	**R4577187**	HYDRAULIC HOSE
14004597	**R4577334**	HYDRAULIC HOSE
14004598	**R4577335**	HYDRAULIC HOSE
14004840	**R4111668**	MASTER CYLINDER
14004846	**R4111582**	MASTER CYLINDER
14005706	**R44141049**	ROTOR
14007101	**R4577240**	HYDRAULIC HOSE
14007102	**R4577241**	HYDRAULIC HOSE
14008238	**R4111584**	MASTER CYLINDER
14008639	**R44141219**	HUB/ROTOR
14008655	**R44141088**	ROTOR
14009146	**R4111668**	MASTER CYLINDER
14009807	**R44141219**	HUB/ROTOR

OEM CROSS REFERENCE LISTING

GMC / CHEVEROLET PART NUMBER	MERITOR PART	DESCRIPTION
14012758	**R44140408**	BRAKE DRUM
14012759	**R44140409**	BRAKE DRUM
14012951	**R46473**	LINED SHOE SET
14012952	**R44141186**	HUB/ROTOR
14013017	**R4066557**	SEAL KIT
14021061	**R44140316**	BRAKE DRUM
14021064	**R44140315**	BRAKE DRUM
14026765	**R44141088**	ROTOR
14026767	**R44141049**	ROTOR
14032431	**R44141233**	HUB/ROTOR
14036112	**R4111864**	MASTER CYLINDER
14036113	**R4111865**	MASTER CYLINDER
14036114	**R4111865**	MASTER CYLINDER
14036115	**R4111584**	MASTER CYLINDER
14036723	**R4577295**	HYDRAULIC HOSE
14036723	**R4577295**	HYDRAULIC HOSE
14039118	**R44141469**	ROTOR
14039119	**R44141468**	HUB/ROTOR
14047276	**R44140316**	BRAKE DRUM
14047299	**R44140315**	BRAKE DRUM
14047683	**R4111863**	MASTER CYLINDER
14048459	**R4122381**	CYLINDER KIT
14048460	**R4122597**	CYLINDER KIT
14050301	**R44140450**	BRAKE DRUM
14050302	**R44140449**	BRAKE DRUM
14050621	**R4122437**	CYLINDER KIT
14050623	**R4122437**	CYLINDER KIT
14054666	**R4577425**	HYDRAULIC HOSE
14054798	**R4577010**	HYDRAULIC HOSE
14054932	**R44141391**	HUB/ROTOR
14056179	**R44141261**	ROTOR
14066425	**R4111982**	MASTER CYLINDER
14070351	**R44140316**	BRAKE DRUM
14070352	**R44140315**	BRAKE DRUM
14079008	**R44141469**	ROTOR
15004608	**60450468002**	CALIPER
15004609	**60450469002**	CALIPER NEW EX-CHANGE
15005485	**60450473001**	CALIPER NEW EX-CHANGE
15005486	**60450474001**	CALIPER NEW EX-CHANGE
15500326	**23122729002**	ROTOR
15500481	**R4111993**	MASTER CYLINDER
15501010	**R40H5522**	HARDWARE KIT
15501013	**R40H5522**	HARDWARE KIT

GMC / CHEVEROLET PART NUMBER	MERITOR PART	DESCRIPTION
15501147	**60050153**	HARDWARE KIT
15502519	**R4577495**	HYDRAULIC HOSE
15508528	**R4577495**	HYDRAULIC HOSE
15510024	**60050150**	CALIPER
15510025	**60050266**	SEAL KIT
15510611	**R4111454**	MASTER CYLINDER
15510612	**R4122681**	CYLINDER KIT
15511254	**R406532**	SEAL KIT
15513991	**R4122386**	MASTER CYL KIT
15514357	**23122729002**	ROTOR
15514406	**23122729002**	ROTOR
15514470	**23122687002**	ROTOR
15514476	**R44141583**	ROTOR
15514492	**23122693002**	ROTOR
15514583	**R424238X**	REMAN CALIPER
15514583	**R4255250**	CALIPER
15514588	**R4090070**	PISTON
15514588	**R4090070P**	PISTON
15515786	**23122687002**	ROTOR
15515786	**23122688002**	ROTOR
15515789	**23122688002**	ROTOR
15519970	**23122729002**	ROTOR
15521254	**R4112066**	MASTER CYLINDER
15521902	**R44141453**	ROTOR
15521903	**R44141454**	ROTOR
15534074	**R44141480**	HUB/ROTOR
15534378	**R4112166**	SLAVE CYLINDER
15534379	**R4122211**	SLAVE CYL KIT
15537761	**R4112176**	CLUTCH CYLINDER
15537762	**R4112168**	SLAVE CYLINDER
15537767	**R4122204**	REPAIR KIT
15537768	**R4122210**	SLAVE CYL KIT
15544322	**R44141483**	ROTOR
15566042	**R424238X**	REMAN CALIPER
15566042	**R4255250**	CALIPER
15566042	**R429218X**	REMAN CALIPER
15567537	**R4577766**	HYDRAULIC HOSE
15567538	**R4577767**	HYDRAULIC HOSE
15567799	**R4577768**	HYDRAULIC HOSE
15567800	**R4577769**	HYDRAULIC HOSE
15567867	**R4577760**	HYDRAULIC HOSE
15567868	**R4577761**	HYDRAULIC HOSE
15574500	**60050150**	CALIPER
15574590	**R4577868**	HYDRAULIC HOSE
15578940	**R4122386**	MASTER CYL KIT
15579020	**23123041002**	ROTOR

OEM CROSS REFERENCE LISTING

GMC / CHEVEROLET PART NUMBER	MERITOR PART	DESCRIPTION
15579025	**23123046002**	ROTOR
15579688	**R4122205**	REPAIR KIT
15579754	**23123046002**	ROTOR
15583114	**R44140536**	BRAKE DRUM
15585417	**R4122160**	SLAVE CYL KIT
15585418	**R4122204**	REPAIR KIT
15588224	**R44140540**	BRAKE DRUM
15588225	**R44140541**	BRAKE DRUM
15589422	**R44141482**	HUB/ROTOR
15589445	**R44141457**	HUB/ROTOR
15589446	**R44141488**	ROTOR
15589447	**R44141540**	HUB/ROTOR
15589588	**R44140543**	BRAKE DRUM
15591391	**R46452**	LINED SHOE SET
15594142	**R4112169**	CLUTCH CYLINDER
15594143	**R4112166**	SLAVE CYLINDER
15594145	**R4122205**	REPAIR KIT
15596619	**R46451**	LINED SHOE SET
15598925	**R4111864**	MASTER CYLINDER
15607207	**R4577765**	HYDRAULIC HOSE
15611098	**23122688002**	ROTOR
15611099	**23122688002**	ROTOR
15615212	**R4090096**	PISTON
15615215	**R4066365**	SEAL KIT
15615220	**R424238X**	REMAN CALIPER
15615220	**R4255250**	CALIPER
15615549	**R4122204**	REPAIR KIT
15616450	**23123041002**	ROTOR
15618257	**MD149**	STOPMATE DISC
15618891	**R424238X**	REMAN CALIPER
15618891	**R4255250**	CALIPER
15618891	**R429218X**	REMAN CALIPER
15619099	**60050150**	CALIPER
15619100	**MD224**	STOPMATE DISC
15619578	**23122693002**	ROTOR
15619626	**23122693002**	ROTOR
15619954	**23122687002**	ROTOR
15619970	**23122729002**	ROTOR
15622360	**R44140604**	BRAKE DRUM
15622381	**R4411260**	ROTOR
15625707	**MD225**	STOPMATE DISC
15629032	**R451534**	HYDRAULIC HOSE
15650039	**R44140619**	BRAKE DRUM
15661542	**23123296002**	ROTOR
15661543	**23123296002**	ROTOR
15661725	**R4411260**	ROTOR

GMC / CHEVEROLET PART NUMBER	MERITOR PART	DESCRIPTION
15661726	**R4411260**	ROTOR
15670712	**R4577010**	HYDRAULIC HOSE
15671784	**R4577241**	HYDRAULIC HOSE
15674441	**R44141862**	ROTOR
15691785	**R4577548**	HYDRAULIC HOSE
15691951	**R44145107**	ROTOR
15693468	**R44140619**	BRAKE DRUM
15693507	**R44140619**	BRAKE DRUM
15885417	**R4122160**	SLAVE CYL KIT
15958644	**R44140682**	BRAKE DRUM
15960224	**R44140682**	BRAKE DRUM
16574590	**R4577868**	HYDRAULIC HOSE
17980225	**R4577321**	HYDRAULIC HOSE
17980226	**R4577187**	HYDRAULIC HOSE
17982962	**R4577558**	HYDRAULIC HOSE
17985137	**R4578224**	HYDRAULIC HOSE
17985138	**R4578787**	HYDRAULIC HOSE
17988191	**R4577768**	HYDRAULIC HOSE
17988192	**R4577769**	HYDRAULIC HOSE
17989770	**R4577544**	HYDRAULIC HOSE
17989773	**R4577851**	HYDRAULIC HOSE
17989911	**R451534**	HYDRAULIC HOSE
17990533	**R4578360**	HYDRAULIC HOSE
17990771	**R4578224**	HYDRAULIC HOSE
17990772	**R4578787**	HYDRAULIC HOSE
17990976	**R4578437**	HYDRAULIC HOSE
17996161	**R4578548**	HYDRAULIC HOSE
17996162	**R4578226**	HYDRAULIC HOSE
17996405	**R4577845**	HYDRAULIC HOSE
17996513	**R4578227**	HYDRAULIC HOSE
17996753	**R4577841**	HYDRAULIC HOSE
17999359	**R4577558**	HYDRAULIC HOSE
17999621	**R4578392**	HYDRAULIC HOSE
17999622	**R4578790**	HYDRAULIC HOSE
17999935	**R4578357**	HYDRAULIC HOSE
17999936	**R4578557**	HYDRAULIC HOSE
17999994	**R4577761**	HYDRAULIC HOSE
18000996	**R4111944**	MASTER CYLINDER
18000997	**R4111732**	MASTER CYLINDER
18001007	**R4112121**	MASTER CYLINDER
18001017	**R4122643**	CYLINDER KIT
18001020	**R4122505**	CYLINDER KIT
18001032	**R4111864**	MASTER CYLINDER
18001060	**R4111732**	MASTER CYLINDER
18002264	**R4112121**	MASTER CYLINDER
18002380	**R4122505**	CYLINDER KIT

OEM CROSS REFERENCE LISTING

GMC / CHEVEROLET PART NUMBER	MERITOR PART	DESCRIPTION
18002389	**R46462**	LINED SHOE SET
18002399	**R40H4019DP**	HOLD DOWN KIT
18002454	**R4111944**	MASTER CYLINDER
18002500	**R4133206**	WHEEL CYLINDER
18002501	**R4133207**	WHEEL CYLINDER
18003155	**R4090028S**	PISTON
18003724	**R4066715**	SEAL KIT
18003743	**R4133891**	WHEEL CYLINDER
18003744	**R4166684**	CYLINDER KIT
18003755	**R4111738**	MASTER CYLINDER
18003756	**R4122482**	CYLINDER KIT
18004609	**R4133708**	WHEEL CYLINDER
18004793	**R4133608**	WHEEL CYLINDER
18004794	**R4133709**	WHEEL CYLINDER
18004888	**R4133447**	WHEEL CYLINDER
18004890	**R4133469**	WHEEL CYLINDER
18004990	**R4133407**	WHEEL CYLINDER
18004991	**R4133406**	WHEEL CYLINDER
18005249	**R4111944**	MASTER CYLINDER
18005254	**R4066557**	SEAL KIT
18005259	**R4111738**	MASTER CYLINDER
18005287	**R4122436**	CYLINDER KIT
18005321	**R4111739**	MASTER CYLINDER
18005388	**R4122494**	CYLINDER KIT
18005633	**R4133725**	WHEEL CYLINDER
18005733	**R4111944**	MASTER CYLINDER
18005771	**R4111739**	MASTER CYLINDER
18005811	**R4111944**	MASTER CYLINDER
18006633	**R4111738**	MASTER CYLINDER
18006635	**R4111739**	MASTER CYLINDER
18007935	**R4122202**	CYLINDER KIT
18007980	**R4133891**	WHEEL CYLINDER
18008062	**R4111739**	MASTER CYLINDER
18008063	**R4111739**	MASTER CYLINDER
18008065	**R4111873**	MASTER CYLINDER
18008065	**R4112058**	MASTER CYLINDER
18008066	**R4111873**	MASTER CYLINDER
18008066	**R4112058**	MASTER CYLINDER
18008068	**R4111989**	MASTER CYLINDER
18008403	**R4133002**	WHEEL CYLINDER
18008599	**R4133206**	WHEEL CYLINDER
18008626	**R4111191**	CLUTCH CYLINDER
18008644	**R4111944**	MASTER CYLINDER
18008880	**R4111732**	MASTER CYLINDER
18008884	**R4111944**	MASTER CYLINDER
18009364	**R4122232**	CYLINDER KIT

GMC / CHEVEROLET PART NUMBER	MERITOR PART	DESCRIPTION
18009371	**R4111905**	MASTER CYLINDER
18009373	**R4111902**	MASTER CYLINDER
18009375	**R4122350**	CYLINDER KIT
18009377	**R4133892**	WHEEL CYLINDER
18009378	**R4166550**	CYLINDER KIT
18009462	**R4112121**	MASTER CYLINDER
18009497	**R4111732**	MASTER CYLINDER
18009755	**R4066557**	SEAL KIT
18009811	**R4111905**	MASTER CYLINDER
18009816	**R4111926**	MASTER CYLINDER
18009879	**R4111923**	MASTER CYLINDER
18009881	**R4111738**	MASTER CYLINDER
18010127	**R4166684**	CYLINDER KIT
18010386	**R4111739**	MASTER CYLINDER
18010555	**R4112178**	MASTER CYLINDER
18010591	**R4111902**	MASTER CYLINDER
18010746	**R4111730**	MASTER CYLINDER
18010748	**R4111989**	MASTER CYLINDER
18011029	**R4122141**	CYLINDER KIT
18011141	**R4166510**	CYLINDER KIT
18011171	**R4166510**	CYLINDER KIT
18011237	**R4122203**	CYLINDER KIT
18011713	**R4112029**	MASTER CYLINDER
18011898	**R4134054**	WHEEL CYLINDER
18011916	**R4111926**	MASTER CYLINDER
18012183	**R4122187**	CYLINDER KIT
18012209	**R4090101S**	PISTON
18012235	**R4090085S**	PISTON
18012251	**R4090087S**	PISTON
18012262	**R40H2622**	ADJUSTER KIT
18012263	**R40H2623**	ADJUSTER KIT
18012274	**R4166510**	CYLINDER KIT
18012303	**R4133891**	WHEEL CYLINDER
18012305	**R4133892**	WHEEL CYLINDER
18012322	**R4111923**	MASTER CYLINDER
18012880	**R4090013S**	PISTON
18012881	**R4090068S**	PISTON
18012918	**R4122202**	CYLINDER KIT
18012919	**R4122232**	CYLINDER KIT
18013429	**R4111926**	MASTER CYLINDER
18013432	**R4111905**	MASTER CYLINDER
18013433	**R4111923**	MASTER CYLINDER
18013435	**R4112058**	MASTER CYLINDER
18013437	**R4112058**	MASTER CYLINDER
18013438	**R4112178**	MASTER CYLINDER
18013440	**R4112058**	MASTER CYLINDER

OEM CROSS REFERENCE LISTING

GMC / CHEVEROLET PART NUMBER	MERITOR PART	DESCRIPTION
18013441	**R4112029**	MASTER CYLINDER
18013954	**R4133962**	WHEEL CYLINDER
18013956	**R4133961**	WHEEL CYLINDER
18013975	**R4111959**	SLAVE CYLINDER
18013977	**R4112219**	MASTER CYLINDER
18014081	**R4134037**	WHEEL CYLINDER
18014308	**R4112342**	MASTER CYLINDER
18014499	**R4133958**	WHEEL CYLINDER
18014694	**R4166298**	CYLINDER KIT
18014698	**R4166297**	CYLINDER KIT
18014699	**R4166307**	CYLINDER KIT
18014705	**R4111989**	MASTER CYLINDER
18014707	**R4111730**	MASTER CYLINDER
18014743	**R4066305**	SEAL KIT
18014746	**R4066306**	SEAL KIT
18014749	**R4066330**	SEAL KIT
18014750	**R40H5707**	BRAKE KIT
18014752	**R40H7324**	BRAKE KIT
18014903	**R4111902**	MASTER CYLINDER
18015234	**R4166510**	CYLINDER KIT
18015235	**R4166307**	CYLINDER KIT
18015414	**R4112492**	MASTER CYLINDER
18015812	**R4134075**	WHEEL CYLINDER
18016570	**R4112058**	MASTER CYLINDER
18017570	**R4134082**	WHEEL CYLINDER
18019217	**R4134054**	WHEEL CYLINDER
18020674	**R4134102**	WHEEL CYLINDER
18021273	**R4110372**	MASTER CYLINDER
18021275	**R4113056**	MASTER CYLINDER
18021277	**R4110376**	MASTER CYLINDER
18029766	**R4134102**	WHEEL CYLINDER
18029967	**R4110372**	MASTER CYLINDER
18029968	**R4113056**	MASTER CYLINDER
18029969	**R4110376**	MASTER CYLINDER
22111827	**R4577544**	HYDRAULIC HOSE
22111828	**R4577851**	HYDRAULIC HOSE
22111870	**R4577868**	HYDRAULIC HOSE
22111873	**R4577864**	HYDRAULIC HOSE
22111874	**R4510644**	HYDRAULIC HOSE
22111878	**R4577010**	HYDRAULIC HOSE
22112097	**R4577841**	HYDRAULIC HOSE
22112623	**R4577240**	HYDRAULIC HOSE
22112624	**R4577241**	HYDRAULIC HOSE
22112625	**R4577548**	HYDRAULIC HOSE
22112627	**R4577761**	HYDRAULIC HOSE
22113357	**R4510645**	HYDRAULIC HOSE

GMC / CHEVEROLET PART NUMBER	MERITOR PART	DESCRIPTION
22113395	**R4577765**	HYDRAULIC HOSE
22113395	**R4577765**	HYDRAULIC HOSE
22113461	**R4577760**	HYDRAULIC HOSE
22113462	**R4577761**	HYDRAULIC HOSE
22113463	**R4578258**	HYDRAULIC HOSE
22113464	**R4578259**	HYDRAULIC HOSE
22113465	**R4577765**	HYDRAULIC HOSE
22113465	**R4577765**	HYDRAULIC HOSE
22113466	**R4577851**	HYDRAULIC HOSE
22113467	**R4577768**	HYDRAULIC HOSE
22113468	**R4577769**	HYDRAULIC HOSE
22113469	**R4577768**	HYDRAULIC HOSE
22113469	**R4578224**	HYDRAULIC HOSE
22113470	**R4577769**	HYDRAULIC HOSE
22113470	**R4578787**	HYDRAULIC HOSE
22113473	**R4577544**	HYDRAULIC HOSE
22113474	**R4578360**	HYDRAULIC HOSE
22113475	**R4578548**	HYDRAULIC HOSE
22113476	**R4578226**	HYDRAULIC HOSE
22113479	**R4578227**	HYDRAULIC HOSE
22113480	**R4578437**	HYDRAULIC HOSE
22113484	**R4577558**	HYDRAULIC HOSE
22113491	**R4577329**	HYDRAULIC HOSE
22113492	**R4577330**	HYDRAULIC HOSE
22163392	**R4577769**	HYDRAULIC HOSE
22163397	**R4578438**	HYDRAULIC HOSE
22163398	**R451667**	HYDRAULIC HOSE
22163451	**R4578403**	HYDRAULIC HOSE
22163452	**R4578460**	HYDRAULIC HOSE
22163599	**R4577768**	HYDRAULIC HOSE
25509416	**R4111863**	MASTER CYLINDER
54731545	**R4133400**	WHEEL CYLINDER
88936204	**23-123557-004**	ROTOR
88982418	**MD1010**	STOPMATE DISC
88982725	**R4212068**	CALIPER
88982726	**R4212067**	CALIPER
89026838	**R4212067**	CALIPER
89040158	**R4212069**	CALIPER
94020711	**R40H9206**	HOLD DOWN KIT
94038193	**R417401**	WHEEL CYLINDER
94038194	**R417398**	WHEEL CYLINDER
94038195	**R417397**	WHEEL CYLINDER
94050880	**R417416**	WHEEL CYLINDER
94050881	**R417415**	WHEEL CYLINDER
94050882	**R417423**	WHEEL CYLINDER
94050883	**R417422**	WHEEL CYLINDER

OEM CROSS REFERENCE LISTING

GMC / CHEVEROLET PART NUMBER	MERITOR PART	DESCRIPTION
94050884	**R417421**	WHEEL CYLINDER
94050885	**R417420**	WHEEL CYLINDER
94051930	**R4122151**	SLAVE CYL KIT
94054926	**R4110348**	MASTER CYLINDER
94054929	**R4111282**	WHEEL CYLINDER
94054931	**R4111283**	WHEEL CYLINDER
94054932	**R4111284**	WHEEL CYLINDER
94054933	**R4111285**	WHEEL CYLINDER
94054934	**R4111286**	WHEEL CYLINDER
94131651	**R417381**	WHEEL CYLINDER
94131652	**R417379**	WHEEL CYLINDER
94154650	**R417375**	WHEEL CYLINDER
94154904	**R417365**	WHEEL CYLINDER
94154905	**R417363**	WHEEL CYLINDER
94154906	**R417366**	WHEEL CYLINDER
94154907	**R417364**	WHEEL CYLINDER
94159294	**R4578267**	HYDRAULIC HOSE
94223199	**R44141251**	ROTOR
94224172	**R44141251**	ROTOR
94312820	**R4113182**	MASTER CYLINDER
94406618	**R4113123**	MASTER CYLINDER
94415047	**R4110409**	CYLINDER KIT
94468350	**R4012282**	PISTON
94468350	**R4090126S**	PISTON
94479584	**R4066306**	SEAL KIT
97168593	**R4012279**	PISTON
97168635	**R4012286**	REPAIR KIT
97168636	**R4012283**	REPAIR KIT
97207147	**R4212276**	CALIPER
97207148	**R4212275**	CALIPER
97329266	**MD827**	DISC PAD SET
97365269	**R4012281**	PISTON
97365279	**R4012280**	PISTON
97365907	**R4212270**	CALIPER
97365908	**R4212269**	CALIPER
97365909	**R4212274**	CALIPER
97365910	**R4212273**	CALIPER
97365913	**R4012285**	REPAIR KIT
97365914	**R4012284**	REPAIR KIT
97377522	**MD827**	DISC PAD SET
97720206	**R4212272X**	CALIPER REMAN
97720216	**R4212271X**	CALIPER REMAN
97720217	**R4212278X**	CALIPER REMAN
97720218	**R4212277X**	CALIPER REMAN
171-809	**6924083**	DISC BRAKE PAD

ISUZU PART NUMBER	MERITOR PART	DESCRIPTION
1-47500-223-0	**R4110348**	MASTER CYLINDER
1-47500-223-1	**R4110348**	MASTER CYLINDER
1-47600-524-0	**R417401**	WHEEL CYLINDER
1-47600-524-1	**R4090126S**	PISTON
1-47600-534-3	**R417398**	WHEEL CYLINDER
1-47600-534-4	**R417398**	WHEEL CYLINDER
1-47600-535-3	**R417397**	WHEEL CYLINDER
1-47600-554-0	**R417416**	WHEEL CYLINDER
1-47600-554-1	**R417416**	WHEEL CYLINDER
1-47600-555-0	**R417415**	WHEEL CYLINDER
1-47600-555-1	**R417415**	WHEEL CYLINDER
1-47600-556-0	**R417423**	WHEEL CYLINDER
1-47600-556-1	**R417423**	WHEEL CYLINDER
1-47600-557-0	**R417422**	WHEEL CYLINDER
1-47600-557-1	**R417422**	WHEEL CYLINDER
1-47600-558-0	**R417421**	WHEEL CYLINDER
1-47600-558-1	**R417421**	WHEEL CYLINDER
1-47600-559-0	**R417420**	WHEEL CYLINDER
1-47600-559-1	**R417420**	WHEEL CYLINDER
1-47600-581-0	**R4111282**	WHEEL CYLINDER
1-47600-583-0	**R4111283**	WHEEL CYLINDER
1-47600-584-0	**R4111284**	WHEEL CYLINDER
1-47600-585-0	**R4111285**	WHEEL CYLINDER
1-47600-586-0	**R4111286**	WHEEL CYLINDER
1-47600-781-0	**R4111283**	WHEEL CYLINDER
1-47600-782-0	**R4111284**	WHEEL CYLINDER
1-47600-783-0	**R4111285**	WHEEL CYLINDER
1-47600-784-0	**R4111283**	WHEEL CYLINDER
1-87830-521-0	**R417399**	CYLINDER KIT
1-87830-527-0	**R417402**	CYLINDER KIT
1-87830-553-0	**R417424**	CYLINDER KIT
1-87830-577-0	**R417417**	CYLINDER KIT
1-88302-996-0	**R469827**	LINING/RIVET SET
1-88302-997-0	**R469826**	LINING/RIVET SET
5-87830-534-0	**R417382**	CYLINDER KIT
5-87830-795-0	**R4122151**	SLAVE CYL KIT
5-87870-028-0	**R469867**	LINING/RIVET SET
8-94131-650-2	**R417375**	WHEEL CYLINDER
8-94131-651-2	**R417374**	WHEEL CYLINDER
8-94131-652-2	**R417372**	WHEEL CYLINDER
8-94154-650-1	**R417375**	WHEEL CYLINDER
8-94154-904-1	**R417365**	WHEEL CYLINDER
8-94154-904-2	**R417365**	WHEEL CYLINDER
8-94154-905-1	**R417363**	WHEEL CYLINDER
8-94154-905-2	**R417363**	WHEEL CYLINDER
8-94154-906-1	**R417366**	WHEEL CYLINDER

OEM CROSS REFERENCE LISTING

ISUZU PART NUMBER	MERITOR PART	DESCRIPTION
8-94154-906-2	**R417366**	WHEEL CYLINDER
8-94154-907-1	**R417364**	WHEEL CYLINDER
8-94154-907-2	**R417364**	WHEEL CYLINDER
8-94159-294-0	**R4578267**	HYDRAULIC HOSE
8-94223-199-0	**R44141251**	ROTOR
8-942233-199-0	**R44141251**	ROTOR
8-94224-172-0	**R44141251**	ROTOR
8-94224-172-1	**R44141251**	ROTOR
8-94230-845-0	**R44141251**	ROTOR
8-94230-845-1	**R44141251**	ROTOR
8-94312-820-0	**R4113182**	MASTER CYLINDER
8-94406-618-0	**R4113123**	MASTER CYLINDER
8-94406-618-1	**R4113123**	MASTER CYLINDER
8-94414-691-1	**R417370**	WHEEL CYLINDER
8-94414-692-1	**R417368**	WHEEL CYLINDER
8-94414-693-1	**R417377**	WHEEL CYLINDER
8-94414-695-0	**R417376**	WHEEL CYLINDER
8-94415-047-0	**R4110409**	CYLINDER KIT
8-94415-047-1	**R4110409**	CYLINDER KIT
8-94450-774-0	**R417369**	WHEEL CYLINDER
8-94450-775-0	**R417367**	WHEEL CYLINDER
8-94468-350-0	**R4012282**	PISTON
8-94468-350-0	**R4090126S**	PISTON
8-94468-358-1	**R417381**	WHEEL CYLINDER
8-94468-359-1	**R417379**	WHEEL CYLINDER
8-94471-386-0	**R4066306**	SEAL KIT
8-94479-583-0	**MD546**	DISC BRAKE PAD
8-94479-584-0	**R4066306**	SEAL KIT
8-97015-357-0	**R44141730**	ROTOR
8-97015-857-0	**R44141730**	ROTOR
8-97095-152-2	**R44141730**	ROTOR
8-97168-585-0	**R4212272X**	CALIPER REMAN
8-97168-586-0	**R4212271X**	CALIPER REMAN
8-97168-587-0	**R4212278X**	CALIPER REMAN
8-97168-588-0	**R4212277X**	CALIPER REMAN
8-97168-593-0	**R4012279**	PISTON
8-97168-633-0	**MD825**	DISC PAD SET
8-97168-634-0	**MD826**	DISC PAD SET
8-97168-635-0	**R4012286**	REPAIR KIT
8-97168-636-0	**R4012283**	REPAIR KIT
8-97182-771-0	**R4421493R**	ROTOR
8-97207-147-0	**R4212276**	CALIPER
8-97207-148-0	**R4212275**	CALIPER
8-97211-691-0	**MD827**	DISC PAD SET
8-97228-624-1	**R4212272X**	CALIPER REMAN
8-97228-625-1	**R4212271X**	CALIPER REMAN

ISUZU PART NUMBER	MERITOR PART	DESCRIPTION
8-97329-266-0	**MD825**	DISC PAD SET
8-97329-266-0	**MD827**	DISC PAD SET
8-97365-269-0	**R4012281**	PISTON
8-97365-279-0	**R4012280**	PISTON
8-97365-907-0	**R4212270**	CALIPER
8-97365-908-0	**R4212269**	CALIPER
8-97365-909-0	**R4212274**	CALIPER
8-97365-910-0	**R4212273**	CALIPER
8-97365-913-0	**R4012285**	REPAIR KIT
8-97365-914-0	**R4012284**	REPAIR KIT
8-97377-522-0	**MD827**	DISC PAD SET
8-97377-522-0	**MD827**	DISC PAD SET

OEM CROSS REFERENCE LISTING

INTERNATIONAL TRUCK AND ENGINE NUMBERS	MERITOR NUMBERS	DESCRIPTION
1646770C1	**23-123572-004**	HAT SHAPE ROTOR
1648518C1	**R44141627**	U SHAPE ROTOR
1658443C91	**R4255250**	2.88 TWIN PISTON CALIPER
1669311C91	**R424237A**	2.60 TWIN PISTON CALIPER
1669312C91	**R4255313**	2.60 TWIN PISTON CALIPER
1684473C91	**R4255656**	2.88 TWIN PISTON CALIPER
1694274C91	**MVD225**	DISC PADS
2501839C91	**R4255849**	BOSCH 66MM CALIPER
2501841C91	**MVD786**	DISC PADS
2501842C91	**MVD786A**	DISC PADS
2505097C1	**23-123572-004**	HAT SHAPE ROTOR
2509253C91	**R4255849**	BOSCH 66MM CALIPER
2509254C91	**R4255850**	BOSCH 73MM CALIPER
2593419C91	**R4355850**	BOSCH 73MM CALIPER
2594594C1	**23-123573-004**	HAT SHAPE ROTOR
2594595C1	**23-123550-004**	HAT SHAPE ROTOR
2594596C1	**23-123552-004**	HAT SHAPE ROTOR
3531661C2	**23-123573-004**	HAT SHAPE ROTOR
3531662C1	**23-123550-004**	HAT SHAPE ROTOR
3531662C2	**23-123550-004**	HAT SHAPE ROTOR
3531663C2	**23-123552-004**	HAT SHAPE ROTOR
573922C1	**23-123573-004**	HAT SHAPE ROTOR
582029C1	**R44141608**	U SHAPE ROTOR
593689C91	**R4255098**	CALIPER
593690C91	**R4255099**	CALIPER
990952C93	**MVD380**	DISC PADS
990953C93	**MVD225**	DISC PADS

NUMERICAL INDEX OF MERITOR PART NUMBERS

MERITOR NO.	PAGE
201179	4-29, 4-33, 5-9, 5-13, 6-110, 6-131
201180	4-29, 4-33,5-9, 5-13, 6-110, 6-131
201181	4-29, 4-33, 5-9, 5-13, 6-110, 6-130
201182	4-29, 5-9, 6-110, 6-130
201183	4-35, 5-15, 6-110, 6-131
201184	4-35, 5-15, 6-110, 6-131
201185	4-35, 5-15, 6-110, 6-130
201186	6-110, 6-130
291000	4-27, 4-35, 5-15
291001	4-33, 5-13
291002	4-26, 4-31, 5-6, 5-11
291003	4-26, 4-31, 5-6, 5-11
291004	4-26, 4-31, 5-6, 5-11
291005	4-26, 4-31, 5-6, 5-11
291006	4-33, 4-35, 5-13, 5-15
291056	4-33, 5-13
291057	4-33, 5-13
291058	4-35, 5-15
291061	4-35, 5-15
451003	4-26, 4-28, 4-31, 5-6, 5-8, 5-11
451004	4-26, 4-28, 4-31, 5-6, 5-8, 5-11
451005	4-26, 4-28, 4-31, 5-6, 5-8, 5-11
4153269	6-52
4510532	6-184
6005032	5-27
6050151	5-49
31320085	5-20, 5-21
60050145	3-28, 6-ii, 6-9, 6-39
60050146	3-28, 3-29
60050150	3-26, 5-27, 5-28, 5-48,6-ii, 6-v, 6-2, 6-37
60050151	5-48, 5-49
60050153	3-26, 3-27, 6-2, 6-9, 6-37, 6-59
60050266	3-26, 3-27
60050312	6-2, 6-55
60050313	3-36, 5-54, 6-2, 6-55
60050315	3-34, 3-35, 3-36, 3-37, 5-52, 5-53, 5-54, 5-55
60050320	3-34, 5-28
60050321	3-34, 5-27, 5-28
60050332	3-30, 3-32
60050334	3-32, 3-33, 3-35, 3-37, 5-25
60450454	3-34, 5-28, 5-52, 6-3, 6-55
60450455	3-34, 5-28, 5-52, 6-3, 6-55
60450473	5-22
60450480	5-19, 5-22
60450481	5-19, 5-22
60450482	5-19, 5-24, 6-55
60450483	5-19, 5-24, 6-55
68150036	4-33, 4-35, 5-13, 5-15
68191307	4-35, 5-15
68660515	4-33, 5-13
68919018	4-31, 5-11
68919019	4-31, 5-11
68919020	4-31, 5-11
68919021	4-31, 5-11
68919050	4-33, 5-13
68919052	4-33, 5-13
68919053	4-33, 5-13
68919068	4-33, 5-13
68919071	4-35, 5-15
68937200	4-31, 5-11
68937201	4-31, 5-11
68937202	4-31, 5-11
68966095	4-35, 5-15
68966097	4-35, 5-15
69160383	5-48, 5-49
69160441	3-26, 3-27, 5-48, 5-49
69160445	3-28, 3-29
69160457	3-26, 3-27, 5-48, 5-49
69270702	3-28, 3-29
69270757	3-26, 3-27, 5-48, 5-49
69270814	3-34, 3-36, 5-52, 5-53, 5-54, 5-55
69310693	3-26, 3-27, 3-28, 3-29, 5-48, 5-49
69310782	3-28, 6-9, 6-59
69530524	3-34, 3-36, 5-52, 5-54
69540212	6-134
79919003	4-37, 5-17
79919004	4-26, 4-37, 5-17
79919005	4-37, 5-17
79919006	4-37, 5-17
1097320340	5-41
60450468002	3-32, 5-24
60450469002	3-32, 5-24
60450473001	3-30, 6-54
60450474001	3-30, 6-54
60450480004	6-3
60450480008	3-30
60450481004	6-3
60450481008	3-30
60450482004	6-3
60450482008	3-32
60450483004	6-3
60450483008	3-32
03-120553-002	4-28, 5-8
065060X	4-29, 5-9
065077X	4-29, 5-9
201179X	4-33, 5-13
201180X	4-33, 5-13
201183X	4-35, 5-15
23-122527-002	6-92, 6-94, 6-96
23-122687-002	6-92, 6-94, 6-97
23-122688-002	6-92, 6-94, 6-96
23-122691-002	6-92, 6-96
23-122693-002	6-92, 6-97
23-122700-002	6-92, 6-94, 6-97
23-122701-002	6-92, 6-96
23-122703-002	6-92, 6-96
23-122728-002	6-96
23-122729-002	6-92, 6-95, 6-97
23-122743-002	6-92, 6-96
23-122897-002	6-92, 6-95, 6-96
23-122920-002	6-96
23-122945-002	6-96
23-122962-002	6-96
23-123041-002	6-92, 6-96
23-123046-002	6-92, 6-97
23-123296-002	6-92, 6-95, 6-97
23-123341-002	6-92, 6-96
23-123433-002	6-92, 6-97
23-123434-002	6-92, 6-95, 6-96
23-123439-002	6-92, 6-97
23-123440-002	6-93, 6-95, 6-97
23-123443-002	6-93, 6-94, 6-96
23-123458-002	6-93, 6-95, 6-97
23-123460-002	6-93, 6-94, 6-96
23-123461-002	6-93, 6-95, 6-97
23-123468-002	6-93, 6-94, 6-96
23-123480-002	6-93, 6-94, 6-96
23-123485-002	6-93, 6-95, 6-96
23-123486-002	6-93, 6-94, 6-96
23-123487-002	6-93, 6-94, 6-96
23-123489-002	6-93, 6-95, 6-97
23-123494-002	6-93, 6-94, 6-96
23-123495-002	6-93, 6-95, 6-96
23-123497-002	6-93, 6-96
23-123498-002	6-93, 6-95, 6-97
23-123527-002	6-93, 6-97
23-123528-002	6-93, 6-97
23-123529-002	6-93, 6-96
23-123532-002	6-93, 6-97
23-123550-004	6-93, 6-97
23-123552-004	6-93, 6-95, 6-97
23-123557-002	5-19, 6-93, 6-96
23-123572-004	6-93, 6-96
23-123573-004	6-93, 6-97
23-123574-004	6-93
23-123617-002	5-19, 6-93
23-123617-004	6-93
23-123618-002	5-19- 6-93
23-123624-002	6-93
23-123625-002	5-19, 6-93
23-123626-002	5-19, 6-93
23-123644-002	6-97
23-123648-002	6-94, 6-97
23-123649-002	6-97
3237D1070	2-15
3237G1047	2-15

NUMERICAL INDEX OF MERITOR PART NUMBERS

MERITOR NO.	PAGE
3237H1256	2-15
3237K1051	2-15
3237L1260	2-15
3237P1056	2-15
3237Q1031	2-15
3237Q1239	2-15
3237R1032	2-15
3237T1242	2-15
3237V1062	2-15
3237V1192	2-15
3237W1097	2-15
3237Y1195	2-15
478 407 014 0	2-4
478 407 016 0	2-4
478 407 033 0	2-4
478 407 061 0	2-4
60040145X	6-ii, 6-9, 3-28, 6.39
60050145XL	6-ii, 6-9
60050145XV	6-ii, 6-9
60050150X	3-26, 5-48, 6-ii, 6-v, 6-2, 6-37
60050150XL	6-ii, 6-v, 6-2
60050150XV	6-ii, 6-v, 6-2
60050312X	6-2
60050312XL	6-2
60050312XV	6-2
60050313X	6-2
60050313XL	6-2
60050313XV	6-2
60050320X	6-3
60050320XL	6-3
60050320XV	6-3
60050321X	6-3
60050321XL	6-3
60050321XV	6-3
60450480X	6-3
60450480XL	6-3
60450480XV	6-3
60450481XL	6-3
60450481XV	6-4
60450482X	6-3
60450482XL	6-3
60450482XV	6-3
60450483X	6-3
60450483XL	6-3
60450483XV	6-3
68021279NPI	4-37, 5-17
68021279X	4-37
68021280NPI	4-37, 5-17
68021280X	4-37
68021281NPI	4-37, 5-17
68021281X	4-37
68021282NPI	4-37, 5-17
68021282X	4-37
68021283NFP	4-37, 5-17
68021283X	4-37
68021284NFP	4-37, 5-17
68021284X	4-37
85-120516-002	4-28, 5-8
85-120517-002	4-28, 5-8
85-122011-002	4-28, 5-8
85-123203-002	4-28, 5-8
85-123276-002	4-28, 5-8
85-123331-002	4-28, 5-8
85-123332-002	4-28, 5-8
85-123548-002	4-28, 5-8
KIT D769GM	3-30, 3-31, 3-32, 3-34, 3-35, 3-37
KIT769AM	3-30, 3-31, 3-32, 3-33, 3-34, 3-35, 3-36, 3-37
KIT769AM	5-52, 5-53, 5-54, 5-55
KIT769AM	6-54, 6-55, 6-75
KITD769AM	3-33, 3-36
KITD769AM	5-23, 5-24
KITD769GM	5-22, 5-23, 5-24
LG714	5-20
LG715	5-20
LRG714	6-54
LRG715	6-54
LRG716	6-54
LRG717	6-54
MD1010	6-5, 6-50, 6-52, 6-53, 6-61, 6-78
MD1032	6-78
MD1062	5-21
MD1064	6-5, 6-61
MD1066	6-7, 6-52, 6-61, 6-79
MD1067	6-79
MD1068	6-79
MD1069	6-5, 6-7, 6-41, 6-46, 6-51, 6-79
MD120	3-24, 3-25, 6-10, 6-11, 6-35, 6-59, 6-63
MD149	3-4, 3-5, 6-10, 6-33, 6-59, 6-60, 6-63, 6-71
MD154	6-9, 6-26, 6-59, 6-63, 6-64
MD171	3-20, 3-21, 6-59, 6-64
MD184	3-7, 3-9, 3-11
MD215	6-27, 6-59, 6-64
MD224	3-26, 3-27, 5-48, 5-49, 6-2, 6-9, 6-37, 6-59, 6-64
MD225	3-12, 3-13, 3-14, 3-15, 5-50, 5-51, 6-2, 6-59, 6-65
MD225HD	6-8, 6-39
MD236	3-28, 3-29, 6-9, 6-39, 6-59, 6-65
MD259	6-24, 6-59, 6-65
MD269	6-9, 6-32, 6-59, 6-62, 6-63, 6-65
MD326	6-28, 6-59, 6-66
MD344	6-24, 6-59, 6-66
MD367	6-24
MD368	6-26, 6-59, 6-66
MD369	6-11, 6-31, 6-59, 6-67
MD370	6-11, 6-33, 6-34, 6-59, 6-67
MD375	6-29, 6-59, 6-66, 6-67
MD376	6-67
MD379	5-4, 5-5
MD379	6-9, 6-53, 6-59, 6-66, 6-67
MD380	3-6, 3-7, 3-8, 3-9, 3-10, 3-11, 6-2, 6-8, 6-12, 6-33, 6-38, 6-59, 6-64, 6-68, 6-74
MD387	6-28, 6-59, 6-60, 6-65, 6-68, 6-72, 6-73
MD392	6-10, 6-11, 6-32, 6-59, 6-63, 6-68
MD411	3-22, 3-23, 6-4, 6-11, 6-37, 6-40, 6-51, 6-68
MD416	6-25, 6-59, 6-68
MD433	5-56, 5-58, 6-42, 6-43, 6-59, 6-69
MD442	6-59, 6-69
MD450	6-11, 6-12, 6-36, 6-60, 6-69
MD459	6-2, 6-60, 6-69
MD477	6-60, 6-69
MD494	6-60, 6-69
MD50	6-9, 6-10, 6-29, 6-59, 6-62
MD505	6-27, 6-60, 6-70
MD52	6-9, 6-10, 6-11, 6-30, 6-31, 6-59, 6-62
MD521	6-25, 6-60, 6-70
MD522	6-25, 6-60, 6-70
MD524	6-60, 6-70
MD529	6-28, 6-60, 6-70
MD557	6-12, 6-36, 6-60, 6-71
MD591	6-60, 6-71, 6-72
MD592	6-71
MD601	6-60, 6-71, 6-73
MD624	5-56, 6-42, 6-60, 6-72
MD626	6-72, 6-60, 6-72
MD646	5-64, 6-46, 6-60, 6-73
MD652	6-60, 6-73
MD655	6-2, 6-3, 6-4, 6-5, 6-7, 6-48, 6-49, 6-60, 6-73
MD675	6-47, 6-60, 6-71, 6-73
MD679	6-60, 6-73
MD702	6-6, 6-7, 6-8, 6-41, 6-42, 6-44, 6-60, 6-73
MD711	6-60, 6-74
MD715	6-60, 6-74
MD716	6-60, 6-74

NUMERICAL INDEX OF MERITOR PART NUMBERS

MERITOR NO.	PAGE
MD726	6-60, 6-74
MD729	6-60, 6-74
MD734	5-56, 5-60, 5-61, 5-62, 6-43, 6-44, 6-60
MD735	5-56, 5-59, 6-60, 6-75
MD746	6-60, 6-75
MD756	6-60, 6-75
MD757	6-60, 6-75
MD758	6-6, 6-45, 6-60
MD769	3-31, 3-33, 3-35, 3-37, 5-19, 5-22, 5-23, 5-25, 5-55, 6-2, 6-3, 6-54, 6-60, 6-61
MD777	6-4, 6-50, 6-59, 6-60, 6-76
MD777M	6-60, 6-76
MD784	6-8, 6-56, 6-57, 6-60, 6-76
MD785	6-57
MD786	3-19, 6-4, 6-53, 6-60, 6-76
MD786A	3-17, 3-18, 6-4, 6-52, 6-60, 6-76
MD821	6-5, 6-48, 6-61, 6-76
MD825	5-44, 5-45, 6-7, 6-47, 6-61, 6-77
MD826	5-44, 5-45, 6-8, 6-50, 6-61, 6-77
MD827	5-44, 5-45, 6-7, 6-8, 6-47, 6-49, 6-61, 6-77
MD859	6-61, 6-77
MD87	6-9, 6-37
MD898	6-8
MD91	6-27, 6-59, 6-62
MD928	6-61, 6-77
MD949	6-6, 6-40, 6-61, 6-78
MD965	6-48, 6-61, 6-78
MD974	6-56, 6-61
MD989	6-61
MDP5040	5-19, 6-8, 6-54
MDP5094	5-20, 5-21
MDV786	6-76
MDV802	6-76
MDV974	6-78
MM786A	3-17
MMD120	3-25
MMD120	6-59, 6-63
MMD149	3-5
MMD149	6-59, 6-63
MMD154	6-59, 6-63
MMD171	3-21
MMD184	3-11
MMD184	3-7, 3-9
MMD224	3-27
MMD224	6-59, 6-64
MMD225	6-59
MMD225	3-13, 3-15
MMD236	3-29
MMD236	6-59, 6-65
MMD269	6-59
MMD369	6-59, 6-67
MMD370	6-59, 6-67
MMD375	6-59, 6-67
MMD379	6-59, 6-67
MMD380	6-59, 6-68
MMD411	3-23
MMD450	6-60, 6-69
MMD459	6-60, 6-69
MMD477	6-69
MMD52	6-59, 6-62
MMD557	6-60, 6-71
MMD655	6-60, 6-73
MMD769	5-23
MMD769	3-31, 3-33, 3-35, 5-25, 5-55, 6-60, 6-61, 6-75
MMD769	3-31, 3-37
MMD786	3-19
MMD786	6-60, 6-76
MMD786A	6-60, 6-76
MQ5200	5-9
MVD1010	6-5
MVD1064	6-5, 6-79
MVD1066	6-7
MVD1067	6-79
MVD1068	6-79
MVD1069	6-5, 6-6, 6-7, 6-79
MVD120	3-25, 6-10, 6-59, 6-63
MVD149	3-5, 6-10, 6-59, 6-63
MVD154	6-59, 6-63
MVD171	3-21, 6-64
MVD215	6-59, 6-64
MVD224	3-27, 6-2, 6-9, 6-59, 6-64
MVD225	3-13, 3-15, 6-8, 6-59, 6-65
MVD236	3-29, 6-9, 6-59, 6-65
MVD259	6-59, 6-65
MVD269	6-9, 6-59, 6-65
MVD326	6-59, 6-66
MVD344	6-66
MVD368	6-59, 6-66
MVD369	6-11, 6-59, 6-67
MVD370	6-11, 6-59, 6-67
MVD375	6-59
MVD376	6-67
MVD379	6-67
MVD380	3-7, 3-9, 3-11, 6-2, 6-8, 6-12, 6-59, 6-68
MVD387	6-59, 6-68
MVD392	6-10, 6-11, 6-68
MVD411	3-23, 6-4, 6-11
MVD416	6-68
MVD433	6-59, 6-69
MVD450	6-11, 6-12, 6-60, 6-69
MVD459	6-2, 6-60, 6-69
MVD477	6-60, 6-69
MVD494	6-60, 6-69
MVD50	6-10, 6-59, 6-62
MVD505	6-60
MVD52	6-9, 6-10, 6-11, 6-59, 6-62
MVD521	6-60, 6-70
MVD522	6-60, 6-70
MVD524	6-60, 6-70
MVD529	6-70
MVD557	6-12, 6-60, 6-71
MVD591	6-60, 6-71
MVD601	6-60, 6-71
MVD624	6-72
MVD632	6-60, 6-72
MVD646	6-73
MVD652	6-60, 6-73
MVD655	6-2, 6-3, 6-4, 6-5, 6-60, 6-73
MVD675	6-60, 6-73
MVD679	6-60, 6-73
MVD702	6-6, 6-7, 6-60, 6-73
MVD711	6-60, 6-74
MVD716	6-60, 6-74
MVD729	6-60, 6-74
MVD746	6-60, 6-75
MVD756	6-60, 6-75
MVD757	6-60, 6-75
MVD758	6-6, 6-60
MVD769	3-35, 3-37, 5-23, 6-2, 6-3, 6-4, 6-60, 6-75
MVD777	6-4, 6-60, 6-76
MVD784	6-60, 6-76
MVD785	6-8, 6-60, 6-76
MVD786	3-19
MVD786	6-4, 6-60
MVD786A	3-17, 6-4, 6-60, 6-76
MVD802	6-60
MVD804	6-61
MVD821	6-5
MVD824	6-77
MVD87	6-9
MVD909	6-61, 6-77
MVD91	6-59, 6-62
MVD989	6-78
R10635	6-185
R307690	5-68
R4010771	3-10, 3-11
R4011079	6-45, 6-48
R4011082	5-68
R4011121	3-34, 3-35, 3-36, 3-37, 5-52, 5-53, 5-54, 5-55, 6-2, 6-3, 6-55
R4011511	3-30, 3-31, 5-22, 5-23
R4011729	3-30, 3-31, 3-32, 3-33, 5-22, 5-23, 5-24, 5-25, 6-3, 6-4, 6-54, 6-55
R4011730	3-32, 3-33, 3-35, 3-37, 5-24, 5-25
R4011731	3-30, 3-31, 5-22, 5-23
R4011739	5-22, 5-24
R4011751	3-17
R4011752	3-17
R4011754	3-16, 3-17, 3-18, 3-19, 6-4, 6-52, 6-53
R4011757	3-18, 3-19
R4011758	3-19
R4011783	5-24

NUMERICAL INDEX OF MERITOR PART NUMBERS

MERITOR NO.	PAGE
R4012015	6-6
R4012072	6-5
R4012081	6-5, 6-7, 6-41, 6-46, 6-51
R4012247	6-7
R4012257	6-7, 6-52
R4012262	6-2, 6-3, 6-7
R4012279	5-44, 5-45
R4012280	5-44, 5-45
R4012281	5-44, 5-45
R4012282	5-44
R4012283	5-44, 5-45, 6-8, 6-50
R4012284	5-44, 5-45, 6-49
R4012285	5-44, 5-45
R4012286	5-44
R4012469	5-44, 6-7, 6-8, 6-47
R4012470	5-44, 6-7, 6-42, 6-43, 6-49
R4012471	5-44, 5-45
R401512713	5-58, 5-59, 5-60, 5-61, 5-62
R401512717	5-64
R40152432	6-134
R401712718	5-64
R40207361	5-33
R402212445	5-56, 5-57
R402212708	5-57, 5-64, 5-65
R402212709	5-57, 5-64, 5-65, 5-66
R402212711	5-57, 5-65
R402212712	5-57
R402212715	5-64, 5-66
R402212716	5-64
R402212720	5-64, 5-65
R402212724	5-65, 5-66
R402212725	5-65
R402235118	3-8, 3-9
R402238231	3-8, 3-9
R40227392	5-40, 5-41
R40227394	5-41
R40227396	5-40, 5-41
R40227400	5-42, 5-43
R40227401	5-42, 5-43
R40227402	5-43
R4023969	4-6, 4-18, 4-20, 4-22, 4-48
R402513823	6-134
R403541	4-44
R404013	3-20, 3-21
R404014	3-20, 3-21
R404015	3-20, 3-21
R404032	4-21
R404033	4-21
R404038	4-25
R404073	5-50, 5-51
R404074	5-50, 5-51
R404097	4-24, 4-25
R404101	5-50, 5-51
R404107	5-50, 5-51
R404140	4-41
R404141	4-41
R404147	4-43
R404148	4-43
R404149	4-43
R404150	4-43
R404151706	6-83
R404153343	3-17, 3-18, 3-19
R404182	4-20
R404183	4-20, 4-48
R4049624	4-22, 4-48
R405707	6-41
R406532	3-12, 3-13
R4066204	3-22, 3-23
R4066365	3-14, 3-15
R4066780	3-4, 3-5, 3-6, 3-7
R407046	6-98
R407130	3-25
R407180	5-4, 5-5
R407181	5-5, 6-9
R407182	5-4, 5-5, 6-53
R407183	5-4, 5-5
R407362	5-34
R407394	5-40
R407921	6-80
R407926	6-80
R407939	6-80
R407945	6-80
R407953	5-68
R407969	4-31, 5-6, 5-7, 5-11
R407975	6-80
R407980	6-80
R407987	6-81
R407992	6-81
R408016	6-81
R408022	6-81
R408024	6-82
R408030	6-82
R408044	5-68
R408058	6-82
R408076	6-82
R408456	6-82
R408574	3-29
R408576	3-29
R4090021	3-4, 3-5, 3-6, 3-7
R4090029	3-24, 3-25
R4090070	3-12, 3-13
R4090070P	3-12, 3-13
R4090088S	3-22, 3-23
R4090096	3-14, 3-15
R4090100P	3-10, 3-11
R40F18789	4-38, 4-48
R40FC004395	4-48
R40H102	6-98
R40H111	6-98
R40H1177	4-48
R40H130	4-6, 4-7
R40H133	6-98
R40H133	5-68, 6-98
R40H140	4-6, 4-7, 4-8, 4-9, 6-98
R40H1456	4-6, 4-8, 4-14, 4-38, 4-40, 4-42, 4-44, 4-48
R40H15068	6-6
R40H15087	6-7, 6-8, 6-44
R40H15088	6-4, 6-50
R40H1600	4-22, 4-23
R40H1601	4-22, 4-23
R40H1805	4-40, 4-41
R40H1807	4-42, 4-43, 4-44, 4-47
R40H1808	4-42, 4-43, 4-44, 4-47
R40H1842	4-20, 4-49
R40H1843	4-20, 4-21, 4-49
R40H1860	4-43, 4-47
R40H1861	4-43, 4-47
R40H1864	4-43, 4-47
R40H1865	4-43, 4-47
R40H1868	4-47
R40H1869	4-42, 4-47
R40H1900	4-46
R40H1901	4-46
R40H1902	4-46
R40H1903	4-46
R40H1916	4-46
R40H1917	4-46
R40H2554	6-60
R40H2588	4-16, 4-17
R40H2589	4-16, 4-17
R40H2598	4-4, 4-5, 4-10, 4-11
R40H2599	4-4, 4-5, 4-10, 4-11
R40H3500	4-18, 4-19, 6-98, 6-106
R40H3501	4-18, 4-19, 6-98, 6-106
R40H3502	4-40, 4-41
R40H3503	4-40, 4-41
R40H3510	4-20, 4-21
R40H3511	4-20, 4-21
R40H3514	4-6, 4-7
R40H3524	4-38
R40H3536	4-22, 4-23
R40H3537	4-22, 4-23
R40H3538	4-24, 4-25
R40H3539	4-24, 4-25
R40H3540	4-42, 4-45
R40H3541	4-42, 4-45
R40H3556	4-8, 4-9
R40H3557	4-8, 4-9
R40H357	5-68, 6-99
R40H364	5-68, 6-99
R40H367	6-98
R40H369	6-98
R40H378	4-16, 4-17, 5-68, 6-98
R40H500	6-98
R40H5002	6-24, 6-59
R40H5004DP	6-59
R40H5010	3-4, 3-5, 3-6, 3-7, 3-8, 3-9, 3-10, 3-11, 3-12, 3-13, 3-14, 3-15, 6-59, 6-60
R40H5021DP	6-59
R40H5045	6-59, 6-60
R40H5083	6-59, 6-60
R40H521	4-38, 4-40, 4-41, 6-98
R40H546	4-10, 4-11, 6-98
R40H547	4-4, 4-5, 6-98
R40H550	4-20, 4-21, 6-98
R40H5500	6-9, 6-10, 6-11, 6-30, 6-31, 6-32, 6-59
R40H5511	6-9, 6-29
R40H5516	6-9, 6-32, 6-37, 6-59
R40H5519	3-6, 3-7, 3-8, 3-9, 3-10, 3-11, 6-8, 6-33

NUMERICAL INDEX OF MERITOR PART NUMBERS

MERITOR NO.	PAGE
R40H5522	3-12, 3-13, 3-14, 3-15, 6-2, 6-8, 6-12, 6-38, 6-39, 6-59
R40H5523	3-28, 6-39
R40H5529	3-4, 3-5, 6-10, 6-33, 6-59, 6-60
R40H5533	3-24, 3-25, 6-10, 6-11, 6-12, 6-35, 6-36, 6-59
R40H5536	6-9, 6-26, 6-59
R40H5545	6-10, 6-27, 6-29, 6-59
R40H5605	6-60, 6-83
R40H5606	6-84
R40H5607	6-60, 6-84
R40H5608	6-84
R40H5638	6-59
R40H5641	6-24, 6-59
R40H5653	6-28, 6-59, 6-60
R40H5654	6-28, 6-29, 6-59
R40H5664	6-83
R40H5707	6-6, 6-11, 6-26, 6-31, 6-33, 6-42, 6-59
R40H5719	6-24, 6-28, 6-59, 6-60
R40H5721	6-59, 6-60
R40H5735	3-22, 3-23, 6-11, 6-37, 6-40, 6-42, 6-51, 6-59
R40H5770	6-59
R40H5788	6-2, 6-27, 6-60
R40H5789	6-60
R40H5815	6-12, 6-36, 6-60
R40H5864	6-4, 6-5, 6-48, 6-49
R40H5916	6-4
R40H5931	6-8
R40H595	4-24, 4-25, 6-98
R40H596	4-22, 4-23, 6-98
R40H597	4-42, 4-43, 4-44, 4-45, 6-98
R40H5974	6-8, 6-41
R40H5975	6-5, 6-48
R40H599	4-18, 4-19, 6-98
R40H608	4-10, 4-11, 5-68, 6-98, 6-99
R40H618	4-26, 4-27
R40H7046	5-68
R40H7055	4-16, 4-17
R40H7064	6-98
R40H7145	4-4, 4-5
R40H7146	4-10, 4-11
R40H7149	5-68, 6-98
R40H7181	4-10, 4-11
R40H7224	6-98
R40H7225	5-68, 6-98, 6-99
R40H7276	5-68
R40H7281	6-98
R40H8200	4-42, 4-43, 4-44, 4-45
R40H8202	4-44, 4-46
R40H8203	6-83
R40H9200	4-42, 4-43, 4-44, 4-45, 6-98
R40H9201	4-38
R40H9204	4-8, 4-9
R40H9206	4-18, 4-19, 6-98, 6-106
R40H9207	4-6, 4-7
R40H9210	6-98
R40H9219	4-22, 4-23
R40H9220	4-24, 4-25
R40H9223	4-14, 4-15
R40H9224	4-12, 4-13
R40H9237	6-98
R40H9237	4-40, 4-41
R40H9238	5-32
R4110344	6-139
R4110354	6-142
R4110355	6-152
R4110357	6-149
R4110359	6-142
R4110360	6-142
R4110362	6-139
R4110366	6-139
R4110368	6-145
R4110369	6-145
R4110373	6-145
R4110374	6-145
R4110375	6-138
R4110379	6-140
R4110428	6-172
R4110431	6-142
R4110432	6-143
R4110436	6-143
R4111046	6-135, 6-150
R4111119	6-135, 6-154
R4111120	6-154
R4111122	6-135, 6-155
R4111123	6-135, 6-155
R4111129	6-135, 6-154
R4111150	6-135, 6-154
R4111151	6-135, 6-156
R4111161	6-177
R4111191	6-177
R4111206	6-167, 6-179
R4111208	6-167, 6-179
R4111266	6-135, 6-154
R4111318	6-166, 6-167, 6-177
R4111320	6-168, 6-180
R4111395	6-148
R4111451	6-135, 6-156
R4111454	6-152
R4111455	6-135, 6-159, 6-170
R4111456	6-135, 6-155
R4111466	6-173, 6-174, 6-180
R4111467	6-173, 6-177
R4111468	6-173, 6-178
R4111494	6-146
R411150	6-154
R4111582	6-142
R4111583	6-135, 6-152
R4111584	6-152
R4111618	6-135, 6-157
R4111619	6-135, 6-156
R4111622	6-159
R4111624	6-135, 6-159
R4111626	6-135, 6-154
R4111629	6-135, 6-156
R4111630	6-135, 6-157
R4111631	6-135, 6-156
R4111632	6-155
R4111633	6-143
R4111634	6-135, 6-157
R4111635	6-159
R4111641	6-135, 6-153
R4111668	6-135
R4111669	6-135, 6-141
R4111676	6-135, 6-144
R4111682	6-135, 6-144
R4111730	6-135, 6-150, 6-152
R4111732	6-135, 6-145, 6-147, 6-148
R4111738	6-138
R4111741	6-153
R4111753	6-134
R4111758	6-147
R4111768	6-168, 6-180
R4111772	6-135, 6-157
R4111773	6-135, 6-155
R4111775	6-135, 6-146
R4111801	6-136
R4111854	6-135, 6-141
R4111856	6-135, 6-144
R4111857	6-142
R4111860	6-147
R4111861	6-135, 6-143
R4111863	6-149
R4111864	6-135
R4111865	6-149
R4111873	6-149
R4111889	6-141
R4111892	6-135, 6-158
R4111896	6-136
R4111898	6-135, 6-160
R4111902	6-144
R4111905	6-140
R4111908	6-135, 6-160
R4111909	6-135, 6-158
R4111910	6-135, 6-158
R4111911	6-155
R4111912	6-135, 6-158
R4111913	6-135, 6-136
R4111915	6-168, 6-180
R4111916	6-168, 6-180
R4111917	6-136
R4111923	6-140
R4111926	6-140
R4111930	6-138
R4111931	6-138
R4111937	6-136
R4111944	6-147
R4111982	6-135, 6-153
R4111983	6-139
R4111989	6-135, 6-150
R4111992	6-135, 6-158
R4111994	6-135, 6-157, 6-159, 6-160
R4111995	6-135, 6-159, 6-160
R4111999	6-135, 6-158
R4112007	6-135, 6-143
R4112008	6-135, 6-145
R4112029	6-151
R4112052	6-168, 6-180
R4112055	6-179
R4112058	6-135, 6-148
R4112117	6-176
R4112118	6-176
R4112119	6-175

NUMERICAL INDEX OF MERITOR PART NUMBERS

MERITOR NO.	PAGE
R4112120	6-168, 6-179
R4112121	6-148
R4112168	6-171, 6-179
R4112169	6-175
R4112176	6-169, 6-175
R4112178	6-149
R4112183	6-137
R4112197	6-135, 6-146
R4112198	6-135, 6-144
R4112199	6-135, 6-141
R4112200	6-135, 6-146
R4112218	6-135, 6-143
R4112219	6-135, 6-149
R4112220	6-135, 6-150
R4112342	6-140
R4112348	6-175
R4112426	6-161
R4112457	6-179
R4112466	6-135, 6-153
R4112519	6-146
R4112561	6-176
R4112641	6-146
R4112833	6-144
R4112834	6-150
R4112840	6-147
R4112985	6-177
R4113022	6-135, 6-150
R4113041	6-153
R4113055	6-147
R4113118	6-169, 6-172, 6-181
R4113207	6-170, 6-172, 6-181
r4113249	6-151
R4113252	6-151
R4113263	6-151
R4113315	6-169, 6-181
R4113318	6-181
R4113347	6-170, 6-181
R4113355	6-151
R4113442	6-161
R4113488	6-160
R4113505	6-182
R4113508	6-164, 6-182
R4113509	6-164, 6-165, 6-166, 6-182
R4113511	6-169, 6-181
R4113513	6-170
R4113514	6-167, 6-182
R4113515	6-167, 6-182
R4113543	6-161
R4113607	6-160
R4113648	6-161
R4113649	6-161
R411739	6-139
R411F2981	6-135
R4120122703	5-56
R4120122704	5-56
R412012622	5-37
R412012623	5-37
R412012624	5-37
R412012625	5-37
R412012626	5-37
R412012627	5-37
R412012628	5-37
R412012629	5-37
R412012630	5-37
R412012631	5-37
R412012632	5-37
R412012633	5-37
R412012634	5-38
R412012635	5-38
R412012636	5-38
R412012637	5-38
R412012638	5-38
R412012639	5-38
R412012640	5-37
R412012641	5-38
R412012642	5-38
R412012643	5-38
R412012644	5-38
R412012645	5-38
R412012646	5-38
R412012647	5-38
R412012648	5-38
R412012649	5-38
R412012650	5-38
R412012651	5-37
R412012652	5-37
R412012653	5-37
R412012654	5-37
R412012671	5-18
R412012673	5-18
R412012674	5-18
R412012675	5-18
R412012676	5-18
R412012677	5-18
R412012678	5-18
R412012680	5-18
R412012681	5-18
R412012682	5-18, 5-19
R412012683	5-18, 5-19
R412012684	5-18, 5-19
R412012685	5-18, 5-19
R412012686	5-18, 5-19
R412012687	5-18, 5-19
R412012692	5-18
R412012693	5-18
R412012694	5-18
R412012695	5-18
R412012701	5-56
R412012702	5-56
R41207361	5-32, 5-34, 5-36
R41207363	5-32, 5-33, 5-34, 5-36
R41207364	5-32, 5-33, 5-34, 5-36
R41207365	5-32, 5-33, 5-34, 5-36
R41207366	5-32, 5-33, 5-34, 5-36
R41207367	5-32, 5-33, 5-34, 5-35, 5-36
R41207368	5-32, 5-33, 5-34, 5-35, 5-36
R41207369	5-32, 5-33, 5-34, 5-35, 5-36
R41207370	5-32, 5-33, 5-34, 5-35, 5-36
R41207372	5-37
R41207374	5-37
R41207375	5-37
R41207379	5-37
R41207380	5-37
R41207381	5-37
R41207397	5-40, 5-41
R41207398	5-40, 5-41
R41207399	5-40, 5-41
R412212446	5-56
R412212447	5-56
R412212448	5-56
R412212614	5-66
R412212662	5-18
R412212663	5-18, 5-19, 5-66
R412212670	5-18, 5-19
R4122346	6-159, 6-160, 6-161
R4122350	6-144
R4122386	6-157, 6-158
R4122387	6-155
R4122486	6-156
R4122488	6-157
R4122505	6-148
R4122568	6-159, 6-160, 6-161
R4122643	6-148
R4122893	6-179
R4122935	6-155
R4122937	6-154
R412514920	6-257
R412515075	6-261
R412518644	6-261
R412912562	5-18
R41301198	6-134
R413019089	6-169
R41302861	6-134
R413034403	6-172
R413034404	6-169
R41303573	6-173
R413036121	6-172, 6-174
R413036154	6-173
R413036155	6-173
R413036212	6-170
R413036347	6-170
R4133002	6-109, 6-110, 6-117
R4133003	6-109, 6-110, 6-117
R4133004	6-109, 6-110, 6-111, 6-117
R4133005	6-109, 6-110, 6-111, 6-117
R4133206	6-109, 6-110, 6-123
R4133207	6-109, 6-110, 6-123
R4133230	6-109, 6-110, 6-115
R4133231	6-109, 6-110, 6-115
R4133256	6-109, 6-110, 6-127
R4133257	6-109, 6-110, 6-127
R4133278	6-109, 6-110, 6-112
R4133279	6-109, 6-110, 6-113
R4133312	6-127, 6-128
R4133315	6-109, 6-110, 6-111, 6-126
R4133316	6-109, 6-111, 6-126
R4133320	6-109, 6-110, 6-122
R4133321	6-109, 6-110, 6-111, 6-122
R4133335	6-131
R4133336	6-109, 6-110, 6-111, 6-128
R4133338	6-109, 6-110, 6-129
R4133366	6-109, 6-110, 6-111, 6-115
R4133367	6-109, 6-110, 6-111, 6-115

NUMERICAL INDEX OF MERITOR PART NUMBERS

MERITOR NO.	PAGE
R4133376	6-109, 6-111, 6-124
R4133377	6-109, 6-111, 6-124
R4133379	6-109, 6-111, 6-126
R4133380	6-109, 6-111, 6-126
R4133390	6-109, 6-110, 6-127
R4133396	6-126
R4133400	6-109, 6-110, 6-111, 6-131
R4133406	6-109, 6-110, 6-113
R4133407	6-109, 6-110, 6-113
R4133420	6-109, 6-110, 6-132
R4133447	6-109, 6-110, 6-114
R4133469	6-109, 6-110, 6-111, 6-116
R4133484	6-109, 6-110, 6-120
R4133485	6-109, 6-110, 6-120
R4133540	6-109, 6-110, 6-111, 6-118
R4133541	6-109, 6-110, 6-111, 6-118
R4133580	6-109, 6-110, 6-127
R4133581	6-109, 6-110, 6-111, 6-125
R4133582	6-109, 6-110, 6-111, 6-125
R4133584	6-109, 6-110, 6-132
R4133597	6-109, 6-111, 6-116
R4133606	6-109, 6-110, 6-111, 6-130
R4133607	6-109, 6-110, 6-111, 6-127
R4133608	6-109, 6-110, 6-117
R4133614	6-109, 6-110, 6-122
R4133615	6-109, 6-110, 6-122
R4133627	6-109, 6-110, 6-114
R4133628	6-109, 6-110, 6-114
R4133637	6-109, 6-111, 6-116
R4133638	6-109, 6-111, 6-116
R4133655	6-109, 6-110, 6-128
R4133656	6-109, 6-110, 6-128
R4133708	6-109, 6-110, 6-124
R4133709	6-109, 6-110, 6-119
R4133714	6-109, 6-110, 6-111, 6-121
R4133715	6-109, 6-110, 6-111, 6-121
R4133716	6-109, 6-110, 6-111, 6-121
R4133717	6-109, 6-110, 6-111, 6-121
R4133718	6-109, 6-111, 6-121
R4133719	6-109, 6-110, 6-111, 6-121
R4133720	6-109, 6-110, 6-111, 6-125
R4133721	6-109, 6-110, 6-111, 6-125
R4133722	6-109, 6-110, 6-111, 6-125
R4133723	6-109, 6-110, 6-111, 6-125
R4133725	6-109, 6-110, 6-118
R4133726	6-109, 6-110, 6-118
R4133791	6-109, 6-110, 6-111, 6-119
R4133792	6-109, 6-110, 6-111, 6-119, 6-120
R4133851	6-109, 6-110, 6-112
R4133858	6-109, 6-110, 6-112
R4133891	6-109, 6-110, 6-112
R4133892	6-109, 6-110, 6-114
R4133893	6-109, 6-112
R4133904	6-109, 6-110, 6-113
R4133905	6-111, 6-129
R4133906	6-111, 6-129
R4133915	6-109, 6-110, 6-120
R4133916	6-109, 6-110, 6-120
R4133930	6-109, 6-110, 6-111, 6-113
R4133945	6-109, 6-110, 6-124
R4133946	6-109, 6-110, 6-124
R4133958	6-110, 6-112
R4133961	6-110, 6-124
R4133962	6-110, 6-123
R4134028	6-110, 6-114
R4134047	6-110, 6-118
R4134054	6-116
R4134064	6-109, 6-110, 6-113
R4134075	6-114
R4134139	6-123
R4134140	6-123
R413635	6-129
R413636	6-132
R414024045	6-165, 6-166, 6-167
R4140350032	6-164
R4140350033	6-164, 6-165
R4140350065	6-165
R4140350069	6-169
R4140350100	6-164, 6-165
R4140350102	6-169
R4140350124	6-169
R4140350182	6-169
R414035085	6-163
R414036066	6-163
R414036148	6-173
R414039737	6-166
R414039815	6-169, 6-172
R414039891	6-165
R4148654	6-134
R415019097	6-170, 6-174
R415033723	6-163
R4150360015	6-167
R4150360016	6-167
R4150360053	6-170
R4150360101	6-170
R415036124	6-171
R415036151	6-163
R415036158	6-171
R415037237	6-171
R415037749	6-168
R415037819	6-168
R415037820	6-168
R415037825	6-168
R415037893	6-163
R415037897	6-168
R415037899	6-168
R415037930	6-168, 6-172
R415037931	6-171, 6-172
R4152515050	6-258
R41569	5-68, 5-70, 6-99, 6-106
R41581	5-68, 5-71, 6-99, 6-106
R41582	5-68, 5-71, 6-99, 6-107
R41583	5-71
R41618406	6-134
R4166713	3-24, 3-25
R417382	5-33
R417785	6-156
R417830	6-177
R418140	5-68
R418210	6-141
R418225	6-137
R418226	6-137
R418229	6-141
R418232	6-137
R418233	6-138
R418234	6-138
R418235	6-137
R418239	6-139
R418242	6-140
R418244	6-152
R418254	6-136
R418304	6-164, 6-165
R418310	6-164
R418311	6-176
R418312	6-169, 6-175
R418313	6-176
R418316	6-176
R418317	6-175
R418318	6-164, 6-165
R418319	6-164
R418339	6-171
R4194002	6-134
R4194010	6-134
R4194012	6-134
R4194013	6-134
R4194014	6-134
R4194015	6-134
R419821	6-171, 6-172
R419822	6-169, 6-172
R41BN2515050	6-254
R41F2981	6-135
R41R2512059	6-255, 6-256
R41R2512059X	6-255
R41R2514916	6-256
R41R2514917	6-255, 6-256
R41R2514917X	6-255
R41R2514918	6-257
R41R2515029	6-255, 6-257
R41R2515030	6-258
R41R2515050	6-254
R41R2515074	6-258
R41R2770433	6-261
R41R2771117	6-259
R41R2771250	6-259

NUMERICAL INDEX OF MERITOR PART NUMBERS

MERITOR NO.	PAGE
R41R2771494	6-255, 6-259
R41R2771494X	6-255
R41R2771552	6-255
R41R374980	6-261
R41R374980X	6-260
R41R512059	6-255
R421005093266AA	6-iii, 6-6, 6-48
R421005093269AA	6-iii, 6-6, 6-48
R421005102062AA	6-iii, 6-iv, 6-6, 6-45
R421005102063AA	6-iii, 6-iv, 6-6, 6-45
R4210685	5-50
R4212067	6-iii, 6-5, 6-52
R4212068	6-iii, 6-5, 6-50
R4212069	6-iv, 6-5, 6-53
R4212077	6-iv, 6-iv, 6-5, 6-51
R4212078	6-iv, 6-iv, 6-5, 6-51
R4212083	6-iii, 6-5, 6-51
R4212084	6-iii, 6-5, 6-51
R4212086	6-6
R4212095	6-6
R4212096	6-6
R4212243	6-iii, 6-6, 6-41
R4212244	6-iv, 6-41
R4212248	6-iii, 6-7, 6-46
R4212249	6-iii, 6-7, 6-46
R4212253	6-iii, 6-7, 6-52
R4212254	6-iii, 6-7, 6-52
R4212269	5-44, 5-46, 6-7, 6-47
R4212270	5-44, 5-46, 6-7, 6-47
R4212271X	5-44, 5-46, 6-7, 6-47
R4212272X	5-44, 5-46, 6-7, 6-47
R4212273	5-44, 5-46,6-ii, 6-v, 6-7, 6-49
R4212274	5-44, 5-46,6-ii, 6-v, 6-8, 6-49
R4212275	5-44, 5-46,6-ii, 6-v, 6-8, 6-49
R4212276	5-44, 5-46,6-ii, 6-v, 6-8, 6-49
R4212277X	5-44, 5-46, 6-8
R4212278X	5-44, 5-46, 6-8, 6-50
R4212278X	6-8, 6-50
R4212298	5-19, 6-8
R4212299	5-19, 6-8
R4212300	5-19, 6-8
R4212301	5-19, 6-8
R4212416X	6-8
R4212417X	6-8
R4212488X	6-8
R4212489X	6-8
R4212490	6-8, 6-41
R4212491	6-8, 6-41
R424153216	6-iv, 3-18
R424153216	6-iv, 6-4, 6-53
R424153263	6-iv, 6-4, 6-52
R424238	5-50
R424238X	5-50
R4255098	3-6
R4255098	6-v, 6-8, 6-33
R4255098X	6-33
R4255099	3-6
R4255099	6-v, 6-8, 6-33
R4255250	3-14, 5-27, 5-28, 5-50, 6-iv, 6-8, 6-39
R4255313	6-iv, 6-2, 6-38
R4255314	3-10
R4255314A	6-38
R4255604	6-ii, 6-iv, 6-5, 6-51
R4255605	6-ii, 6-iv, 6-5, 6-51
R4255656	3-14
R4255656	6-iv, 6-2, 6-39
R4255717	6-iv, 6-8
R4255748	6-ii, 6-7, 6-49
R4255749	6-ii, 6-iii, 6-7, 6-49
R4255794	6-ii, 6-7, 6-44
R4255795	6-ii, 6-7, 6-44
R4255849	6-iv, 6-4
R4255850	6-iv, 6-4
R4255857	6-ii, 6-4, 6-40
R4255858	6-ii, 6-4, 6-40
R4255861	6-ii, 6-4, 6-50
R4255862	6-ii, 6-4, 6-50
R4255865	6-ii, 6-iii, 6-iv, 6-6, 6-45
R4255866	6-ii, 6-iii, 6-iv, 6-6, 6-45
R4255887	6-ii, 6-iii, 6-4, 6-48
R4255888	6-ii, 6-iii, 6-4, 6-48
R4255889	6-iii, 6-5, 6-48
R4255890	6-iii, 6-5, 6-48
R4255915	6-ii, 6-iii, 6-iv, 6-4, 6-45
R4255916	6-ii, 6-iii, 6-iv, 6-4, 6-45
R4255966	6-iv, 6-v, 6-6
R4255967	6-iv, 6-v, 6-6
R4255972	6-iv, 6-6, 6-42
R4255973	6-iv, 6-6, 6-41, 6-42
R4255988	6-6
R4255989	6-6
R4256544	6-6, 6-40
R4256545	6-6, 6-40
R4256546	6-6, 6-40
R4256547	6-6, 6-40
R427178	6-53
R427178X	6-53
R427179	6-53
R427179X	6-53
R429422X	4-37
R429422X	5-6, 5-17
R429423X	4-37
R429423X	5-6, 5-17
R429424X	4-37
R429424X	5-6, 5-17
R429425X	4-37
R429425X	5-6, 5-17
R42L12067	6-iii, 6-5
R42L12068	6-iii, 6-5
R42L12069	6-iv, 6-5
R42L12077	6-iv, 6-5
R42L12078	6-iv, 6-5
R42L12083	6-iii, 6-5
R42L12084	6-iii, 6-5
R42L12243	6-iii, 6-7
R42L12244	6-iv, 6-7
R42L12248	6-iii, 6-7
R42L12249	6-iii, 6-7
R42L12253	6-iii, 6-7
R42L12254	6-iii, 6-7
R42L55060	6-11
R42L55061	6-11
R42L55098	6-v, 6-8
R42L55099	6-v, 6-8
R42L55118	6-9
R42L55119	6-9
R42L55199	6-10
R42L55200	6-10
R42L55205	6-10
R42L55206	6-10
R42L55207	6-9
R42L55208	6-10
R42L55243	6-10
R42L55244	6-10
R42L55245	6-iv, 6-12
R42L55250	6-iv, 6-8
R42L55313	6-iv, 6-2
R42L55381	6-10
R42L55382	6-11
R42L55411	6-10
R42L55412	6-10
R42L55454	6-9
R42L55455	6-9
R42L55460	6-11
R42L55460P	6-12
R42L55461	6-12
R42L55461P	6-12
R42L55496	6-ii, 6-11
R42L55497	6-ii, 6-11
R42L55500	6-11
R42L55501	6-11
R42L55604	6-iv, 6-11
R42L55605	6-iv, 6-11
R42L55636	6-12
R42L55637	6-12
R42L55656	6-iv, 6-2
R42L55687	6-ii, 6-2
R42L55688	6-ii, 6-2
R42L55717	6-iv, 6-8
R42L55748	6-ii, 6-iii, 6-2, 6-7
R42L55749	6-ii, 6-iii, 6-3, 6-7
R42L55794	6-ii, 6-7
R42L55795	6-7
R42L55849	6-iv, 6-4
R42L55850	6-iv, 6-4
R42L55857	6-ii, 6-4
R42L55858	6-ii, 6-4
R42L55861	6-ii, 6-4
R42L55862	6-ii, 6-4
R42L55865	6-ii, 6-iii, 6-iv, 6-6
R42L55866	6-ii, 6-iii, 6-iv, 6-6
R42L55887	6-ii, 6-iii, 6-4
R42L55888	6-ii, 6-iii, 6-5
R42L55889	6-iii, 6-5
R42L55890	6-iii, 6-5
R42L55966	6-iv, 6-v, 6-6
R42L55967	6-v, 6-6
R42L55972	6-iv, 6-6
R42L55973	6-iv, 6-6
R42L56544	6-6
R42L56545	6-6
R42L56546	6-6
R42L56547	6-6
R42LV12067	6-iii, 6-5
R42LV12068	6-iii, 6-5
R42LV12069	6-iv, 6-5
R42LV12077	6-iv, 6-5
R42LV12078	6-iv, 6-5
R42LV12083	6-iii, 6-5
R42LV12084	6-iii, 6-6
R42LV12243	6-iii, 6-7
R42LV12244	6-iv, 6-7

NUMERICAL INDEX OF MERITOR PART NUMBERS

MERITOR NO.	PAGE
R42LV12248	6-iii, 6-7
R42LV12249	6-iii, 6-7
R42LV12253	6-iii, 6-7
R42LV12254	6-iii, 6-7
R42LV55060	6-11
R42LV55061	6-11
R42LV55098	6-v, 6-8
R42LV55099	6-v, 6-8
R42LV55118	6-9
R42LV55119	6-9
R42LV55199	6-10
R42LV55200	6-10
R42LV55205	6-10
R42LV55206	6-10
R42LV55207	6-9
R42LV55208	6-10
R42LV55215	6-9
R42LV55216	6-9
R42LV55243	6-10
R42LV55244	6-10
R42LV55245	6-iv, 6-12
R42LV55250	6-iv, 6-8
R42LV55313X	6-iv, 6-2
R42LV55381	6-10
R42LV55382	6-11
R42LV55411	6-10
R42LV55412	6-10
R42LV55454	6-9
R42LV55455	6-9
R42LV55460	6-11
R42LV55460P	6-12
R42LV55461	6-12
R42LV55461P	6-12
R42LV55496	6-ii, 6-11
R42LV55497	6-ii, 6-11
R42LV55500	6-11
R42LV55501	6-11
R42LV55604	6-iv, 6-11
R42LV55605	6-iv, 6-11
R42LV55636	6-12
R42LV55637	6-12
R42LV55656	6-iv, 6-2
R42LV55687	6-ii, 6-2
R42LV55688	6-ii, 6-2
R42LV55717	6-iv, 6-8
R42LV55748	6-ii, 6-iii, 6-2, 6-7
R42LV55749	6-ii, 6-iii, 6-3, 6-7
R42LV55794	6-ii, 6-7
R42LV55795	6-ii, 6-7
R42LV55849	6-iv, 6-4
R42LV55850	6-iv, 6-4
R42LV55857	6-ii, 6-4
R42LV55858	6-ii, 6-4
R42LV55861	6-ii, 6-4
R42LV55862	6-ii, 6-4
R42LV55865	6-ii, 6-iii, 6-iv, 6-6
R42LV55866	6-ii, 6-iii, 6-iv, 6-6
R42LV55887	6-ii, 6-iii, 6-4
R42LV55888	6-ii, 6-iii, 6-5
R42LV55889	6-iii, 6-5
R42LV55890	6-iii, 6-5
R42LV55966	6-iv, 6-v, 6-6
R42LV55967	6-v, 6-6
R42LV55972	6-iv, 6-6
R42LV55973	6-iv, 6-6
R42R1012433	6-42
R42R1012433X	5-56, 5-58, 5-59
R42R1012434	6-42
R42R1012434X	5-56, 5-58, 5-59
R42R1012435	6-43
R42R1012435X	5-56, 5-58, 5-59
R42R1012436X	5-56, 5-58, 5-59
R42R1012439	5-56, 6-43
R42R1012440	5-56, 6-43
R42R1012441	5-56, 6-43
R42R1012442	5-56, 6-43
R42R1012455	6-44
R42R1012455X	5-56, 5-60, 5-61
R42R1012456	6-44
R42R1012456X	5-56, 5-60, 5-61
R42R1012457	6-44
R42R1012457X	5-56, 5-60, 5-61
R42R1012458	6-44
R42R1012458X	5-56, 5-60, 5-61
R42R1012459	5-64, 6-46
R42R1012460	5-64, 6-46
R42R1012655	6-47
R42R1012655X	5-46
R42R1012656	6-47
R42R1012656X	5-46
R42R1012698	6-42
R42R1012698X	5-56
R42R1012699	6-42
R42R1012699X	5-56
R42R12067	6-iii, 6-5
R42R12068	6-iii, 6-5
R42R12069	6-iv, 6-5
R42R12077	6-iv, 6-5
R42R12078	6-iv, 6-5
R42R12083	6-iii, 6-5
R42R12084	6-iii, 6-5
R42R12243	6-iii, 6-7
R42R12244	6-iv, 6-7
R42R12248	6-iii, 6-7
R42R12249	6-iii, 6-7
R42R12253	6-iii, 6-7
R42R12254	6-iii, 6-7
R42R1912436	6-43
R42R55060	6-11, 6-31
R42R55061	6-11, 6-31
R42R55094	6-9, 6-29
R42R55095	6-9, 6-29
R42R55098	3-6, 6-v, 6-8
R42R55099	3-6, 6-v, 6-8, 6-33
R42R55116	6-9, 6-32
R42R55117	6-9, 6-32
R42R55118	6-32
R42R55119	6-32
R42R55158	6-9
R42R55159	6-9
R42R55193	6-30
R42R55194	6-30
R42R55199	3-4
R42R55199	6-10, 6-33
R42R55200	3-4
R42R55200	6-10, 6-33
R42R55205	6-10, 6-31
R42R55206	6-10, 6-31
R42R55207	6-30
R42R55208	6-30
R42R55209	6-9, 6-26
R42R55210	6-9, 6-26
R42R55215	6-30
R42R55216	6-9, 6-30
R42R55233	6-27
R42R55234	6-27
R42R55243	6-10, 6-29
R42R55244	6-10, 6-29
R42R55245	3-8, 6-iv, 6-12, 6-38
R42R55248	6-28
R42R55249	6-28
R42R55250	3-14, 6-iv, 6-8, 6-39
R42R55254	6-29
R42R55255	6-29
R42R55258	6-28
R42R55259	6-28
R42R55264	6-26
R42R55265	6-26
R42R55278	6-24
R42R55279	6-24
R42R55304	6-27
R42R55305	6-27
R42R55313	6-iv, 6-2, 6-38
R42R55314	3-10, 6-38
R42R55381	6-10, 6-32
R42R55382	6-10, 6-32
R42R55383	6-9
R42R55384	6-10
R42R55411	3-24, 6-35
R42R55412	6-10, 6-35
R42R55413	3-24, 6-11, 6-35
R42R55454	6-9, 6-37
R42R55455	6-9, 6-37
R42R55456	3-24, 6-35
R42R55460	6-11, 6-36
R42R55460P	6-12, 6-36
R42R55461	6-12, 6-36
R42R55461P	6-12, 6-36
R42R55496	6-ii, 6-11, 6-33, 6-34
R42R55497	6-ii, 6-11, 6-33, 6-34
R42R55498	6-26
R42R55499	6-26
R42R55500	6-11, 6-31
R42R55501	6-11, 6-31
R42R55506	6-24
R42R55507	6-24
R42R55512	3-24
R42R55518	6-24
R42R55519	6-24
R42R55520	6-25
R42R55521	6-25
R42R55590	6-25
R42R55591	6-25
R42R55604	3-22, 6-iv, 6-11, 6-37, 6-51
R42R55605	3-22, 6-iv, 6-11, 6-37, 6-51
R42R55616	6-27
R42R55617	6-27
R42R55630	6-25
R42R55631	6-25
R42R55634	6-28
R42R55635	6-28
R42R55636	6-12
R42R55637	6-12
R42R55656	6-iv, 6-2, 6-39
R42R55677	6-11
R42R55687	6-ii, 6-2
R42R55688	6-ii, 6-2

NUMERICAL INDEX OF MERITOR PART NUMBERS

MERITOR NO.	PAGE
R42R55717	6-iv, 6-8
R42R55748	6-ii, 6-2, 6-7
R42R55749	6-ii, 6-iii, 6-2, 6-7
R42R55794	6-ii, 6-7
R42R55795	6-ii, 6-7
R42R55805	6-8
R42R55849	6-iv, 6-4
R42R55850	6-iv, 6-4
R42R55853	6-8, 6-57
R42R55854	6-8, 6-57
R42R55855	6-8, 6-57
R42R55856	6-8, 6-57
R42R55857	6-ii, 6-4
R42R55858	6-ii, 6-4
R42R55861	6-ii, 6-4
R42R55862	6-ii, 6-4
R42R55865	6-ii, 6-iii, 6-iv, 6-6
R42R55866	6-ii, 6-iii, 6-iv, 6-6
R42R55887	6-ii, 6-iii, 6-4
R42R55888	6-ii, 6-iii, 6-4
R42R55889	6-iii, 6-5
R42R55890	6-iii, 6-5
R42R55915	6-ii, 6-iii, 6-iv, 6-4
R42R55916	6-ii, 6-iii, 6-iv, 6-4
R42R55943	6-56
R42R55944	6-56
R42R55966	6-iv, 6-v, 6-6
R42R55967	6-iv, 6-v, 6-6
R42R55972	6-iv, 6-6
R42R55973	6-iv, 6-6
R42R55994	6-56
R42R55995	6-56
R42R56544	6-6
R42R56545	6-6
R42R56546	6-6
R42R56547	6-6
R42R5966	6-41
R42R7178	6-v, 6-9
R42R7179	6-v, 6-9
R43DE18001047X	6-254, 6-255
R43DE18001072X	6-254
R43DE18001810X	6-254
R43DE18003144X	6-255
R43DE18003998X	6-255
R43DE18014080X	6-254
R43MDC3472X	6-253
R43MDC3492X	6-254
R43MDC3500SEX	6-255
R43MDC3500SFX	6-253
R43MDC3502SBX	6-252
R43MDC3503SX	6-254
R43MDC3507SBX	6-253
R43MDC3510SAX	6-255
R43MDC4003X	6-254
R43MDC4007X	6-254
R43MDC4012X	6-254
R43MDC4013X	6-254
R43MDC4025X	6-253
R43MDC4029X	6-253
R43MDC4034X	6-254
R43MDC4035X	6-254
R43MDC4036X	6-254
R43MDC4037X	6-254
R43MDC4042X	6-254
R43MDC4044X	6-253, 6-255
R43MDC4055X	6-254
R43MDC4056X	6-254
R43MDC4058X	6-254
R43MDC4083X	6-252
R43MDC4085X	6-253
R43MDC4089X	6-254, 6-255
R43MDC4090X	6-254
R43MDC448X	6-252
R43MDC462X	6-253
R43MDC464X	6-252
R43MDC468BX	6-254
R43MDC490X	6-252
R43MDCC462X	6-252
R43MDKN35010X	6-253, 6-254, 6-255
R44104716	6-89
R4412432	6-90
R4412438	6-90
R4412443	6-89
R4412450	6-90
R4412451	6-90
R4412454	6-90
R44140012	6-88
R44140023	6-89
R44140037	6-89
R44140039	6-88
R44140253	6-88
R44140254	6-88
R44140264	6-88
R44140267	6-88
R44140278	6-88
R44140315	6-88
R44140316	6-88
R44140344	6-88
R44140351	6-88
R44140362	6-88
R44140363	6-88
R44140365	6-88
R44140374	6-88
R44140386	6-88
R44140387	6-88
R44140388	6-88
R44140391	6-88
R44140397	6-88
R44140401	6-89
R44140408	6-88
R44140409	6-88
R441404090	6-88
R44140449	6-88
R44140450	6-88
R44140451	6-88
R44140452	6-88
R44140461	6-88
R44140468	6-88
R44140471	6-88
R44140479	6-88
R44140484	6-88
R44140493	6-88
R44140496	6-88
R44140497	6-88
R44140499	6-88
R44140504	6-88
R44140506	6-88
R44140510	6-88
R44140520	6-88
R44140532	6-88
R44140536	6-88
R44140540	6-88
R44140541	6-88
R44140542	6-88
R44140543	6-88
R44140545	6-88
R44140547	6-88
R44140570	6-88
R44140574	6-88
R44140583	6-89
R44140600	6-88
R44140604	6-88
R44140619	6-88, 6-89
R44140620	6-89
R44140622	6-88
R44140657	6-88
R44140658	6-88
R44140675	6-89
R44140679	6-88
R44140682	6-89
R44140685	6-88
R44140686	6-89
R44140712	6-89
R44140722	6-89
R44140724	6-89
R44140729	6-89
R44141043	6-91
R44141049	6-89
R44141067	6-91
R44141088	6-89
R44141089	6-91
R44141127	6-89
R44141130	6-91
R44141152	6-91
R44141153	6-91
R44141154	6-91
R44141171	6-89
R44141174	6-89
R44141179	6-89
R44141186	6-91
R44141193	6-89
R44141194	6-89
R44141196	6-91
R44141197	6-91
R44141214	6-90
R44141216	6-91
R44141219	6-91
R44141223	6-89
R44141233	6-91
R44141234	6-91
R44141235	6-91
R44141237	6-89
R44141251	6-89
R44141261	6-89
R44141263	6-89
R44141264	6-91
R44141265	6-91
R44141289	6-90
R44141290	6-89
R44141379	6-90
R44141381	6-91
R44141382	6-91
R44141389	6-89
R44141391	6-91
R44141397	6-89
R44141414	6-89
R44141415	6-91
R44141450	6-90
R44141452	6-91
R44141453	6-89
R44141454	6-89
R44141455	6-89
R44141457	6-91
R44141464	6-91
R44141468	6-91
R44141469	6-89
R44141477	6-90
R44141480	6-91
R44141481	6-91
R44141482	6-91
R44141483	6-90

NUMERICAL INDEX OF MERITOR PART NUMBERS

MERITOR NO.	PAGE	MERITOR NO.	PAGE	MERITOR NO.	PAGE	MERITOR NO.	PAGE
R44141487	6-91	R44145139	6-90	R442712669	5-18	R4510532	6-196
R44141488	6-91	R44145141	6-91	R442712679	5-18	R4510533	6-230
R44141498	6-91	R44145152	6-90	R442R1771	6-90	R4510534	6-185, 6-196
R44141507	6-90	R44145162	6-90	R447184	6-94	R4510537	6-184, 6-196
R44141508	6-91	R44145192	6-91	R447185	6-94	R4510538	6-185, 6-196
R44141519	6-91	R44145202	6-90	R448394	6-89	R4510539	6-185, 6-196
R44141529	6-89	R44145245	6-90	R448395	6-89	R4510545	6-185, 6-196
R44141540	6-91	R44145251	6-90	R448396	6-89	R4510546	6-185, 6-197
R44141547	6-90	R44145255	6-91	R448904	6-94	R4510549	6-184, 6-197
R44141583	6-94	R44145256	6-91	R449873	6-94	R4510550	6-184, 6-197
R44141586	6-90	R44145257	6-90	R4510440	6-183, 6-188	R4510552	6-184, 6-197
R44141621	6-90	R44145258	6-90	R4510446	6-184, 6-188	R4510553	6-184, 6-197
R44141627	6-94	R44145259	6-90	R4510447	6-183, 6-188	R4510558	6-184, 6-198
R44141629	6-94	R44145260	6-90	R4510448	6-183, 6-188	R4510563	6-183, 6-197
R44141663	6-89	R44145261	6-90	R4510450	6-184, 6-190	R4510564	6-185, 6-198
R44141664	6-90	R44145262	6-90	R4510451	6-185, 6-190	R4510565	6-185, 6-198
R44141730	6-94	R44145267	6-91	R4510452	6-185, 6-189	R4510566	6-185, 6-198
R44141741	6-90	R44145268	6-90	R4510453	6-184, 6-189	R4510567	6-183, 6-198
R44141745	6-89	R44145274	6-90	R4510454	6-185, 6-189	R4510568	6-184, 6-198
R44141770	6-90	R44145279	6-90	R4510457	6-185, 6-189	R4510569	6-184, 6-199
R44141806	6-91	R44145280	6-90	R4510458	6-185, 6-189	R4510571	6-184, 6-199
R44141808	6-90	R44145283	6-90	R4510459	6-185, 6-189	R4510573	6-183, 6-199
R44141818	6-91	R44145309	6-90	R4510462	6-183, 6-190	R4510574	6-185, 6-199
R44141829	6-91	R44145316	6-90	R4510466	6-184, 6-190	R4510582	6-185, 6-199
R44141856	6-94	R44145317	6-90	R4510471	6-184, 6-190	R4510583	6-185, 6-200
R44141856	3-20	R44145325	6-90	R4510472	6-184, 6-190	R4510584	6-183, 6-200
R44141858	6-94	R44145339	6-90	R4510487	6-185, 6-191	R4510585	6-183, 6-200
R44141861	6-91	R44145345	6-90	R4510488	6-185, 6-191	R4510586	6-183, 6-200
R44141862	6-91	R44145357	6-90	R4510491	6-185, 6-191	R4510587	6-185, 6-200
R44141866	6-91	R44145360	6-90	R4510492	6-183, 6-191	R4510588	6-183, 6-200
R44141867	6-91	R44145368	6-91	R4510494	6-184, 6-191	R4510589	6-183, 6-199
R44141893	6-90	R44145452	6-90	R4510495	6-184, 6-191	R4510592	6-184, 6-201
R44141903	6-91	R44145456	6-90	R4510497	6-185, 6-192	R4510594	6-184, 6-201
R44141906	6-91	R44145859	6-91	R4510498	6-183, 6-192	R4510595	6-185, 6-201
R44141922	6-90	R441712432	5-58, 5-59	R4510500	6-184, 6-192	R4510596	6-185, 6-201
R44141923	6-91	R441712450	5-61	R4510503	6-184, 6-185, 6-192	R4510597	6-184, 6-201
R44141924	6-91	R441712451	5-60, 5-62			R4510598	6-185, 6-201
R44141927	6-91	R441712454	5-64	R4510504	6-184, 6-192	R4510599	6-185, 6-202
R44141934	6-90	R4421483R	6-90	R4510505	6-185, 6-193	R4510602	6-185, 6-202
R44141951	6-89	R4421493R	6-90	R4510506	6-185, 6-193	R4510603	6-202
R44141953	6-89	R4421503R	6-90	R4510509	6-185, 6-193	R4510604	6-184, 6-202
R44145028	6-90	R4421513R	6-90	R4510510	6-184, 6-193	R4510617	6-184, 6-202
R44145049	6-91	R4421533R	6-90	R4510511	6-184, 6-194	R4510618	6-183, 6-202
R44145050	6-90	R442712438	5-56	R4510512	6-184, 6-194	R4510619	6-203
R44145054	6-91	R442712443	5-56, 5-57	R4510514	6-184, 6-194	R4510623	6-203
R44145055	6-90	R442712444	5-56, 5-57	R4510515	6-184, 6-194	R4510630	6-203
R44145057	6-91	R442712616	5-36, 5-39	R4510516	6-183, 6-194	R4510631	6-203
R44145065	6-90	R442712617	5-36, 5-39	R4510517	6-183, 6-194	R4510632	6-203
R44145068	6-91	R442712619	5-36, 5-39	R4510518	6-185, 6-195	R4510633	6-203
R44145071	6-91	R442712620	5-66	R4510520	6-183, 6-195	R4510634	6-183, 6-204
R44145079	6-90	R442712660	5-18	R4510521	6-183, 6-195	R4510635	6-204
R44145086	6-90	R442712661	5-18	R4510525	6-184, 6-195	R4510636	6-185, 6-204
R44145108	6-91	R442712667	5-18	R4510528	6-183, 6-195	R4510637	6-183, 6-204
R44145134	6-91	R442712668	5-18	R4510530	6-183, 6-195	R4510638	6-183, 6-204

NUMERICAL INDEX OF MERITOR PART NUMBERS

MERITOR NO.	PAGE
R4510641	6-183, 6-185, 6-204, 6-205
R4510643	6-185, 6-205
R4510644	6-185, 6-205
R4510649	6-183, 6-205
R4510650	6-184, 6-205
R4510651	6-184, 6-205
R4510652	6-185, 6-206
R4510653	6-185, 6-206
R4510654	6-183, 6-206
R4510659	6-185, 6-206
R4510660	6-185, 6-206
R4510661	6-183, 6-206
R4510662	6-183, 6-207
R4510664	6-183, 6-207
R4510665	6-185, 6-207
R4510667	6-183, 6-207
R4511071	6-184, 6-207
R4511204	6-183, 6-184, 6-207, 6-208
R4511244	6-184, 6-208
R4511245	6-183, 6-208
R4511296	6-184, 6-208
R4512290	6-183, 6-208
R4512291	6-184, 6-208
R4512292	6-183, 6-209
R4512400	6-185, 6-209
R4512419	6-184, 6-209
R4512420	6-183, 6-209
R4512421	6-183, 6-209
R4512427	6-185, 6-209
R4512428	6-185, 6-210
R4512430	6-184, 6-210
R4512472	6-251
R4513542	6-161
R4533757	6-133
R45616972	6-133
R45616973	6-133
R457013680	6-250
R457013681	6-250
R457013682	6-250
R457013683	6-250
R457013684	6-250
R457013685	6-250
R457013686	6-250
R457013687	6-250
R457013688	6-250
R457013689	6-250
R457013690	6-250
R457013691	6-250
R457013692	6-250
R457013693	6-250
R457013694	6-250
R457013695	6-250
R457013696	6-250
R457013697	6-250
R457013698	6-250
R457013699	6-250
R457013700	6-250
R457013701	6-250
R457013702	6-250
R457013703	6-250
R45707384	5-32, 5-33, 5-34, 5-36
R4577010	6-183, 6-210
R4577019	6-184, 6-210
R4577024	6-183, 6-211
R4577078	6-183, 6-210
R4577080	6-183, 6-210
R4577083	6-183, 6-211
R4577135	6-185, 6-211
R4577147	6-184, 6-211
R4577169	6-183, 6-211
R4577171	6-183, 6-211
R4577185	6-183, 6-212
R4577187	6-185, 6-212
R4577189	6-184, 6-212
R4577235	6-183, 6-212
R4577240	6-185, 6-212
R4577241	6-185, 6-212
R4577245	6-184, 6-213
R4577247	6-184
R4577248	6-183, 6-213
R4577249	6-183, 6-213
R4577252	6-184, 6-213
R4577277	6-184, 6-213
R4577295	6-183, 6-213
R4577296	6-183, 6-214
R4577297	6-183, 6-214
R4577298	6-183, 6-214
R4577299	6-184, 6-214
R4577300	6-184, 6-214
R4577309	6-183, 6-214
R4577311	6-183, 6-215
R4577312	6-183, 6-215
R4577314	6-185, 6-215
R4577315	6-184, 6-215
R4577316	6-184, 6-215
R4577317	6-184, 6-215
R4577320	6-184, 6-216
R4577321	6-184, 6-216
R4577327	6-183, 6-216
R4577328	6-184, 6-216
R4577329	6-183, 6-216
R4577330	6-183, 6-216
R4577332	6-185, 6-217
R4577333	6-185, 6-217
R4577334	6-185, 6-217
R4577340	6-183, 6-217
R4577378	6-183, 6-217
R4577379	6-184, 6-217
R4577380	6-184, 6-218
R4577387	6-183, 6-218
R4577388	6-183, 6-218
R4577415	6-183, 6-218
R4577416	6-183, 6-218
R4577417	6-184, 6-218
R4577418	6-184, 6-219
R4577419	6-183, 6-219
R4577420	6-183, 6-219
R4577421	6-184, 6-219
R4577425	6-185, 6-219
R4577427	6-185, 6-220
R4577428	6-184, 6-220
R4577429	6-185, 6-220
R4577430	6-184, 6-220
R4577440	6-183, 6-221
R4577441	6-183, 6-221
R4577443	6-183, 6-221
R4577444	6-183, 6-221
R4577452	6-185, 6-221
R4577453	6-185, 6-221
R4577454	6-185, 6-222
R4577455	6-185, 6-222
R4577457	6-185, 6-222
R4577460	6-185, 6-222
R4577461	6-185, 6-222
R4577463	6-184, 6-222
R4577479	6-184, 6-223
R4577481	6-185, 6-223
R4577482	6-184, 6-223
R4577484	6-185, 6-223
R4577495	6-184, 6-223
R4577500	6-184, 6-223
R4577503	6-185, 6-224
R4577512	6-183, 6-224
R4577514	6-185, 6-224
R4577537	6-185, 6-224
R4577544	6-185, 6-224
R4577548	6-185, 6-224
R4577558	6-183, 6-225
R4577559	6-185, 6-225
R4577560	6-185, 6-225
R4577564	6-185, 6-225
R4577565	6-183, 6-225
R4577596	6-183, 6-225
R4577597	6-183, 6-226
R4577598	6-183, 6-226
R4577612	6-184, 6-226
R4577613	6-184, 6-226
R4577614	6-184, 6-226
R4577631	6-183, 6-226
R4577686	6-185, 6-227
R4577760	6-184, 6-227
R4577761	6-184, 6-227
R4577765	6-183, 6-228
R4577766	6-183, 6-228
R4577767	6-183, 6-228
R4577768	6-184, 6-228
R4577769	6-184, 6-228
R4577787	6-183, 6-227
R4577788	6-183, 6-227
R4577799	6-183, 6-228
R4577826	6-185, 6-229
R4577841	6-185, 6-227
R4577845	6-183, 6-229
R4577851	6-184, 6-229
R4577857	6-183, 6-229
R4577860	6-185, 6-230
R4577864	6-183, 6-229
R4577865	6-183, 6-229
R4577868	6-185, 6-230
R4577870	6-184, 6-230
R4577900	6-184, 6-230
R4577901	6-184, 6-230
R4577909	6-184, 6-230
R4577914	6-185, 6-231
R4577915	6-185, 6-231
R4577921	6-183, 6-231
R4577927	6-184, 6-231
R4577928	6-184, 6-232
R4578001	6-185, 6-232
R4578016	6-183, 6-232
R4578068	6-183, 6-232
R4578072	6-183, 6-232
R4578084	6-184, 6-233
R4578085	6-185, 6-233
R4578117	6-185, 6-233
R4578118	6-185, 6-233
R4578129	6-184, 6-233
R4578130	6-184, 6-233
R4578132	6-185, 6-234
R4578133	6-184, 6-234
R4578134	6-184, 6-234
R4578135	6-183, 6-234
R4578136	6-183, 6-234
R4578137	6-184, 6-234
R4578144	6-184, 6-235
R4578145	6-183, 6-235
R4578159	6-185, 6-235
R4578165	6-184, 6-235
R4578166	6-183, 6-235
R4578169	6-184, 6-235
R4578182	6-183, 6-236
R4578183	6-183, 6-236
R4578184	6-184, 6-236

NUMERICAL INDEX OF MERITOR PART NUMBERS

MERITOR NO.	PAGE
R4578187	6-184, 6-236
R4578188	6-183, 6-236
R4578206	6-184, 6-236
R4578208	6-185, 6-237
R4578209	6-185, 6-237
R4578210	6-183, 6-237
R4578218	6-185, 6-237
R4578219	6-184, 6-237
R4578224	6-185, 6-237
R4578226	6-185, 6-238
R4578227	6-185, 6-238
R4578258	6-184, 6-238
R4578259	6-183, 6-238
R4578267	6-183, 6-238
R4578303	6-185, 6-238
R4578305	6-184, 6-239
R4578312	6-183, 6-239
R4578313	6-185, 6-239
R4578324	6-185, 6-239
R4578325	6-185, 6-239
R4578326	6-183, 6-239
R4578327	6-183, 6-240
R4578331	6-183, 6-240
R4578332	6-184, 6-240
R4578333	6-183, 6-240
R4578357	6-183, 6-240
R4578360	6-185, 6-241
R4578386	6-184, 6-241
R4578387	6-185, 6-241
R4578392	6-184, 6-241
R4578403	6-183, 6-241
R4578410	6-183, 6-242
R4578437	6-185, 6-242
R4578438	6-184, 6-185, 6-242
R4578460	6-183, 6-242
R4578480	6-184, 6-242
R4578548	6-185, 6-243
R4578557	6-183, 6-243
R4578610	6-184, 6-243
R4578618	6-184, 6-243
R4578666	6-184, 6-243
R4578774	6-184, 6-243
R4578787	6-185, 6-244
R4578790	6-184, 6-244
R4578802	6-184, 6-244
R4578824	6-183, 6-244
R4578825	6-183, 6-244
R4578843	6-185, 6-244
R4578873	6-183, 6-245
R4578874	6-184, 6-245
R4578876	6-185, 6-245
R4578880	6-185, 6-245
R4578881	6-185, 6-245
R4578885	6-185, 6-245
R4578897	6-184, 6-246
R4578898	6-184, 6-246
R4578899	6-183, 6-246
R4578912	6-183, 6-246
R458083	6-184, 6-186
R458458	6-184, 6-186
R458473	6-184, 6-187
R458484	6-185, 6-187
R458529	6-183, 6-187
R458544	6-186
R458545	6-185, 6-186
R458564	6-249
R458565	6-249
R458566	6-249
R458567	6-249
R458568	6-249
R458569	6-249
R458570	6-249
R458571	6-251
R458572	6-251
R458632	6-185, 6-187
R458633	6-183, 6-187
R458634	6-184, 6-187
R458635	6-185, 6-188
R458636	6-185, 6-188
R458639	6-249
R458640	6-249
R458641	6-249
R458642	6-249
R458643	6-249
R458644	6-249
R458645	6-249
R458646	6-249
R458692	6-251
R4588312	6-184, 6-246
R4588472	6-183, 6-246
R4588519	6-183, 6-247
R4588530	6-184, 6-247
R4588558	6-185, 6-247
R4588561	6-184, 6-247
R4588564	6-185, 6-247
R4588651	6-183, 6-247
R458932	6-251
R45B308	6-249
R45B312	6-249
R45B320	6-249
R45B330	6-249
R45B340	6-249
R45B351	6-249
R45B360	6-249
R45B408	6-249
R45B412	6-249
R45B420	6-249
R45B430	6-249
R45B440	6-249
R45B451	6-249
R45B460	6-249
R45B508	6-249
R45B512	6-249
R45B520	6-249
R45B530	6-249
R45B540	6-249
R45B551	6-249
R45B560	6-249
R45B608	6-249
R45B612	6-249
R45B620	6-249
R45B630	6-249
R45B640	6-249
R45B651	6-249
R45B660	6-249
R45F124053	6-184, 6-248
R4612006	6-99
R46357	5-69, 6-98, 6-101, 6-102
R46358	4-4, 4-10, 5-69, 6-98, 6-101, 6-102
R46382	6-103
R46383	6-103
R46445	5-69, 6-98, 6-104
R46446	5-69, 6-98, 6-104
R46449	5-68, 5-69, 6-104
R46451	5-68, 5-69, 6-98, 6-105
R46452	4-16, 5-68, 5-70, 6-98, 6-105
R46462	5-68, 5-70, 6-105
R46473	5-68, 5-70, 6-98, 6-105
R46481	6-105
R46514	5-68, 5-70, 6-106
R46538	5-68, 5-70, 6-98, 6-106
R46552	5-68, 5-70, 6-99, 6-107
R46593	5-68, 5-71, 6-99, 6-107
R46602	5-57, 5-64, 5-65, 5-66, 5-71
R46603	5-65, 5-66, 5-71
R46604	5-65
R46612	5-32, 5-34, 5-36, 5-66, 5-72
R46613	5-41, 5-42, 5-43, 5-67, 5-72
R46614	5-65, 5-67, 5-72
R46617	5-57, 5-65, 5-67, 5-72
R46632	5-57, 5-66, 5-72
R46672	5-66, 5-73
R46679	5-64, 5-65, 5-66, 5-73
R46680	5-66, 5-73
R46681	5-64, 5-66, 5-73
R46682	5-66, 5-73
R46683	5-18, 5-66, 5-74
R46684	5-18, 5-19, 5-66, 5-74
R46685	5-18, 5-19, 5-66, 5-74
R46686	5-57, 5-67, 5-74
R46695	5-64, 5-66, 5-74
R46699	5-36, 5-66, 5-74
R46705	5-68, 5-71, 6-107
R46717	5-64, 5-65, 5-67, 5-74
R46730	5-67, 5-75
R46731	5-57, 5-67, 5-75
R467389	5-40, 5-41
R467389-31	5-40
R467390	5-40, 5-41
R46792	5-67, 5-75
R468134	5-68, 5-70
R4745	6-262
R476061	6-262
R476120	4-29, 5-9
R476120X	4-29, 5-9
R477208	4-29, 5-9
R477208X	4-29, 5-9
R47830	5-57
R497181	5-4
R507950	5-68
R6680	5-64
R700235	4-38, 6-98, 6-99, 6-100
R700321	4-40, 6-98, 6-99, 6-101

NUMERICAL INDEX OF MERITOR PART NUMBERS

MERITOR NO.	PAGE
R700346	4-42, 4-44, 6-98, 6-99, 6-101, 6-102
R700381	4-42, 4-44, 6-98, 6-99, 6-103
R700383	6-98, 6-99
R700400	4-24, 6-98, 6-104
R700401	4-24, 6-98, 6-104
R700427	4-20, 6-98, 6-104
R700442	4-20, 6-98, 6-104
R700463	4-38, 6-98, 6-99, 6-105
R950054	2-11
R950055	2-12
R950056	2-12
R950057	2-13
R955421	2-12
S446 044 047 0	2-3
S446 044 061 0	2-3
S446 044 062 0	2-3
S446 044 085 0	2-3
S446 044 086 0	2-3
S446 045 007 2	2-12
S446 046 009 2	2-8
S446 046 920 2	2-8
S446 046 921 2	2-8
S446 280 012 0	2-10
S446 280 790 4	2-10
S446 300 314 0	2-17
S449 711 015 0	2-15
S449 711 031 0	2-15
S449 711 050 0	2-15
S449 711 080 0	2-15
S449 711 100 0	2-15
S449 711 120 0	2-15
S449 711 150 0	2-15
S451 900 474 2	2-12
S451 900 523 2	2-8
S451 900 922 2	2-9
S451 900 923 2	2-9
S451 900 924 2	2-13
S451 900 925 2	2-13
S458 501 026 1	2-8
S458 501 923 2	2-9
S458 501 924 2	2-9
S468 411 005 0	2-12
S468 411 923 2	2-13
S468 413 020 2	2-12
S468 413 021 2	2-12
S468 413 921 2	2-12, 2-13
S472 879 920 2	2-9
S476 901 920 2	2-9
S478 407 011 0	2-4
S478 407 012 0	2-4
S478 407 015 0	2-4
S478 407 018 0	2-4
S478 407 019 0	2-4
S478 407 027 0	2-4
S478 407 028 0	2-4
S478 407 055 2	2-4
S478 407 056 0	2-4
S478 407 056 4	2-4
S478 407 058 0	2-4
S478 407 060 0	2-4
S478 407 062 0	2-4
S478 407 122 0	2-8
S478 407 353 2	2-4
S478 407 356 4	2-4
S478 407 357 4	2-4
S478 407 358 4	2-4
S478 407 921 2	2-11
S478 407 928 2	2-11
S478 407 929 2	2-8, 2-10
S478 407 930 2	2-8, 2-10
S478 901 052 2	2-8, 2-11
S478 901 053 2	2-8, 2-11
S478 901 054 0	2-12
S478 901 057 2	2-12
S478 901 352 4	2-4
S478 905 152 2	2-8
S949 711 065 0	2-15
SJ1035	5-20, 5-21
SJ1035	6-8, 6-54
SMA2124504	4-28, 4-31, 5-8, 5-11
SMA2124505	4-28, 4-31, 5-8, 5-11
SMA2124528	4-28, 4-31, 5-8, 5-11
SP7854	4-31, 5-11
SP7854S	4-31, 5-11
SP7860	4-31, 5-11
SP7860S	4-31, 5-11
SP7861	4-31, 5-11
SP7861S	4-26, 4-27, 4-31, 5-6, 5-7, 5-11
SP7862	4-31, 5-11
SP7862S	4-26, 4-27, 4-31, 5-6, 5-7, 5-11
SP7865	5-6
SP7868	4-35, 5-15
SP7868S	4.35, 5-15
SP7870	5-6, 5-7, 5-9
SP7871	4.35, 5-15
SP7871S	4.35, 5-15
SP7872	4-33, 5-13
SP7872S	4-33, 5-13
SP7873	4-31, 5-11
SP7873S	4-26, 4-31, 5-11
SP7879	4-33, 5-13
SP7879S	4-26, 4-27, 4-33, 5-6, 5-7, 5-13
SP7880	4-33, 5-13
SP7880S	4-26, 4-27, 4-33, 5-6, 5-7, 5-13
SP7881S	4-33, 5-13
SP7887	4-35, 5-15
SP7887S	4-26, 4-29, 4-35, 5-6, 5-9, 5-15
SP7888S	4-29, 4-35, 5-15
SP7889	4-33, 5-13
SP7889S	4-33, 5-13
SP7896	4-31, 5-11, 6-98, 6-99
SP7896S	4-31, 5-11
SP7897	4-31, 5-11, 6-98, 6-99
SP7897S	4-31, 5-11
SP7920S	4-26, 4-29, 4-33, 5-6, 5-9, 5-13
SP7987S	4-31, 5-11
SP8566	5-21
SP8597	5-20
XSMA2124504L	4-28, 5-8
XSMA2124505L	4-28, 5-8
XSMA2124528L	4-28, 5-8

ARVINMERITOR AFTERMARKET PARTS WARRANTY

We warrant all new parts for one year from date of shipment to the buyer against defective material or workmanship (but not against damage caused by accident, abuse or improper installation, maintenance or repair) when such parts are used on vehicles the specifications of which have been approved by our Engineering Department.

As the exclusive remedy under this warranty, we will, at our option, repair or replace such parts free of charge, or take back the nonconforming parts and refund the monies paid by buyer for such parts, if found on examination by us to be nonconforming and if any necessary return charges are prepaid.

If it is necessary to return any parts under this warranty, buyer agrees not to make any deduction on account thereof from remittances on current accounts while claims are in the process of disposition. Any expense incurred without our consent for repairs or replacement will not be allowed.

THIS WARRANTY IS EXPRESSLY IN LIEU OF ALL OTHER WARRANTIES OR CONDITIONS, EXPRESS, IMPLIED OR STATUTORY, INCLUDING ANY IMPLIED WARRANTY OF MERCHANTABILITY OR FITNESS FOR PARTICULAR PURPOSE. IN NO EVENT SHALL SELLER BE LIABLE FOR INCIDENTAL OR CONSEQUENTIAL DAMAGES OF ANY NATURE.

Only genuine ArvinMeritor replacement parts are covered by this aftermarket parts warranty.

Information contained in this publication was in effect at the time the publication was approved for printing and is subject to change without notice or liability. ArvinMeritor reserves the right to revise the information presented or discontinue the production of parts at any time.

Distributed by:

Meritor Heavy Vehicle Systems, LLC
7975 Dixie Highway
Florence, Kentucky 41042 USA
888-725-9355

www.arvinmeritor.com
XpresswayPlus.arvinmeritor.com

Information contained in this publication was in effect at the time the publication was approved for printing and is subject to change without notice or liability. ArvinMeritor reserves the right to revise the information presented or discontinue the production of parts at any time.

Litho in USA
Revised 07/08
PB-99127 (13028/05060)
©2008 ArvinMeritor, Inc.